297-8321-815

DMS-100 Family

Extended Peripheral Module

Extended Peripheral Module Translations Reference Manual

Volume 2 of 3

XPM14 and up Standard 14.01 March 2001

NORTEL NETWORKS™

DMS-100 Family

Extended Peripheral Module

Extended Peripheral Module Translations Reference Manual

Volume 2 of 3

Publication number: 297-8321-815
Product release: XPM14 and up
Document release: Standard 14.01
Date: March 2001

Copyright © 1994-2001 Nortel Networks,
All Rights Reserved

Printed in the United States of America

NORTEL NETWORKS CONFIDENTIAL: The information contained herein is the property of Nortel Networks and is strictly confidential. Except as expressly authorized in writing by Nortel Networks, the holder shall keep all information contained herein confidential, shall disclose the information only to its employees with a need to know, and shall protect the information, in whole or in part, from disclosure and dissemination to third parties with the same degree of care it uses to protect its own confidential information, but with no less than reasonable care. Except as expressly authorized in writing by Nortel Networks, the holder is granted no rights to use the information contained herein.

Information is subject to change without notice. Nortel Networks reserves the right to make changes in design or components as progress in engineering and manufacturing may warrant. Changes or modification to the DMS-100 without the express consent of Nortel Networks may void its warranty and void the users authority to operate the equipment.

Nortel Networks, the Nortel Networks logo, the Globemark, How the World Shares Ideas, Unified Networks, DMS, DMS-100, Helmsman, MAP, Meridian, Nortel, Northern Telecom, NT, SuperNode, and TOPS are trademarks of Nortel Networks.

Contents

Extended Peripheral Module Translations Reference Manual Volume 2 of 3

NTP Summary Contents ix

1 XPM translations introduction 1-1

2 Introduction to data tables 2-1
- Tuple properties 2-1
- Using the table editor 2-2
- Procedures for datafilling any system 2-3
  - Input prompts and prompting mode 2-3
  - Nonprompting mode 2-4
  - Activating changes to tables 2-4
  - Table editor commands 2-4

3 Subscriber Carrier Module-100S 3-1
- Understanding SMS translations 3-1
- Signaling for SMS 3-1
  - SMS-RCS signaling links 3-1
  - Signaling protocols 3-3
  - SMS-RCS signaling functions 3-6
- Preparing to datafill SMS 3-16
  - PCL—New software delivery vehicle 3-16
  - Tasks associated with the SMS-RCS system 3-17
  - Protection lines 3-17
  - Special services nailed-up cross connections 3-17
  - Controlling RCS modes 3-17
  - Static datalog tracking 3-18
- Basic call processing 3-19
- Custom Local Area Signaling Services 3-121
- Meridian Digital Centrex Basic 3-148
- Special Services 3-150

4 Subscriber Carrier Module Urban 4-1
- SMU translations 4-1
  - Introduction to subscriber carrier systems 4-1

Subscriber carrier systems in the DMS-100 family 4-1
The Subscriber Carrier Module-100 Urban 4-3
Signaling for SMU 4-4
SMU signaling links 4-4
A-and B-bit signaling 4-6
Per-channel signaling 4-6
Coin signaling 4-6
FXB special service signaling 4-6
Message channels 4-6
ISDN BRI signaling 4-7
National ISDN-2/3 BRI Phase I 4-8
MBS signaling 4-9
Signaling protocols 4-10
A-and B-bit messages 4-10
DMS-X protocol 4-10
Q.931 Digital Network Access protocol 4-13
SMU signaling functions 4-13
Peripheral processor (PP) SMU basic all processing 4-14
Origination and channel allocation 4-14
Tone generation 4-15
Digit collection 4-16
Ringing 4-16
Automatic number identification 4-17
Loss padding 4-17
Messaging loss 4-17
Busy/return to service of subscriber lines 4-18
Limits to call processing 4-18
SMU-RCU coin operation 4-18
Coin operation limits and interactions 4-21
RCU to SMU signaling 4-21
SMU to computing module (CM) messages 4-21
Preparing to datafill SMU 4-22
PCL—New software delivery vehicle 4-22
SMU static data update 4-22
Static datalog tracking 4-23
Basic Call Processing 4-24
Custom Local Area Signaling Services 4-120
Special Services 4-142

5 Subscriber Carrier Module-100 Access 5-1

Understanding SMA translations 5-1
The Subscriber Carrier Module-100 Access 5-1
SMA system summary 5-1
SMA system functionality 5-3
Introduction 5-3
Voice and data communications 5-3
DS-1 frame format 5-3
Extended superframe format signaling 5-4
Call setup, call take-down, and call monitoring 5-6
Common signaling channel signaling 5-6

Operation, administration, maintenance, and provisioning (OAM&P) 5-7
EOC message signaling 5-7
ISDN BRI signaling 5-9
National ISDN-2/3 BRI Phase I feature 5-9
Bellcore compliant ADSI tones and compatible voiceband data 5-10
ADSI interactions 5-11
ADSI limit 5-11
ADSI hardware requirements 5-11
Path protection switching 5-12
SMA to S/DMS AccessNode path protection switching 5-12
Manual path protection switching control 5-13
Automatic path protection switching 5-13
Manual and automatic protection switching limits 5-14
Communication protocols 5-14
Q.921 CCITT LAPD protocol 5-14
Q.931 CCITT protocol 5-15
Q.931 protocol message structure 5-16
Protocol discriminator 5-17
Call reference 5-17
Message type 5-18
Information element 5-19
Q.931 message descriptions 5-22
EOC communication protocol 5-24
EOC protocol stack 5-26
Applications router 5-27
Operation entities 5-27
DS30 protocol 5-28
ADSI protocol 5-30
Physical layer 5-31
Data link layer 5-31
Message layer 5-31
Call processing 5-31
Call processing (RDT to IDT) 5-31
Time slot request 5-31
Channel selection 5-32
Sending addressing information 5-32
Tone generation 5-32
Call disconnection 5-33
Flash detection 5-34
Busy service of subscriber lines 5-34
Call processing (IDT to RDT) 5-34
Time slot request 5-34
Network busy call treatment 5-35
Channel selection 5-35
Alerting 5-35
On-hook transmission 5-36
Custom local area signaling service (CLASS) calling number delivery (CND) 5-36
Loss padding 5-36
Call disconnection 5-37

Flash detection 5-37
Busy service of subscriber lines 5-38
Call processing coin operation 5-38
Coin commands 5-38
Coin collect 5-38
Coin return 5-38
Coin presence 5-38
Coin partial presence 5-39
Battery commands 5-39
Reverse battery 5-39
Normal battery 5-39
Subscriber line signaling 5-39
Coin operations limits and interactions 5-39
SMA service capabilities 5-40
Plain ordinary telephone service (POTS) 5-40
Coin operation service 5-40
Coin first 5-40
Coin dial-tone first 5-41
Coin semi-postpay 5-42
Coin call functionality 5-42
Custom calling features for Meridian business sets (MBS) 5-43
Message waiting indicator 5-44
Message waiting lamp 5-44
Meridian business set messaging 5-44
Universal tone receiver services 5-45
Direct Outward Dial (DOD) 5-45
Custom local area signaling service 5-45
Meridian Digital Centrex (MDC) features on 500/2500 sets and attendant consoles 5-45
Multiple appearance directory number (MADN) feature 5-46
MADN members provisioning 5-46
Off-premise extension (bridged service) 5-47
Private branch exchange (PBX) central office access 5-47
Residential services 5-47
Secretarial line 5-47
Teen service 5-47
Toll diversion 5-48
Wide area telecommunications services 5-48
800 service 5-48
ISDN services 5-48
Ringing 5-49
Dialing 5-49
Tones 5-49
SMA line card support 5-49
Deluxe Spontaneous Call Waiting Identification 5-50
Preparing to datafill SMA 5-56
PCL—New software delivery vehicle 5-56
Tasks associated with datafilling the SMA 5-56
Static datalog tracking 5-56
When to update static data 5-57

Dynamic static date update 5-58
DMS recognition of the switching unit and all remote locations 5-58
Base SCM Access 5-60

6 Subscriber Carrier Module-100 Access MVI-20 6-1

Understanding SMA translations 6-1
The Subscriber Carrier Module-100 Access 6-1
SMA system overview 6-1
SMA system functionality 6-3
Introduction 6-3
Voice and data communications 6-3
DS-1 frame format 6-3
Extended superframe format signaling 6-4
Call setup, call take-down, and call monitoring 6-6
TR-303 hybrid signaling 6-6
Operation, administration, maintenance, and provisioning (OAM&P) 6-9
EOC message signaling 6-9
ISDN BRI signaling 6-10
National ISDN-2/3 BRI Phase I feature 6-11
Bellcore compliant ADSI tones and compatible voiceband data 6-11
ADSI interactions 6-13
ADSI restriction 6-13
ADSI hardware requirements 6-13
Path protection switching 6-13
SMA to generic RDT path protection switching 6-14
Manual path protection switching control 6-15
Automatic path protection switching 6-15
Manual and automatic protection switching restrictions 6-16
Communication protocols 6-16
Q.921 CCITT LAPD protocol 6-16
Q.931 CCITT protocol 6-17
EOC communication protocol 6-23
DS30 protocol 6-26
ADSI protocol 6-29
Call processing 6-30
Call processing (RDT to IDT) 6-30
Call processing (IDT to RDT) 6-33
Call processing coin operation 6-36
SMA service capabilities 6-38
Plain ordinary telephone service (POTS) 6-38
Coin operation service 6-38
Coin call functionality 6-40
Universal tone receiver services 6-40
Custom local area signaling service 6-40
Meridian Digital Centrex (MDC) features on 500/2500 sets and attendant consoles 6-40
Off-premise extension (bridged service) 6-40
Private branch exchange (PBX) central office access 6-41
Residential services 6-41
Secretarial line 6-41

Teen service 6-41
Toll diversion 6-41
Wide area telecommunications services 6-41
800 service 6-41
ISDN services 6-41
Ringing 6-42
Dialing 6-43
Tones 6-43
Deluxe Spontaneous Call Waiting Identification 6-43
Preparing to datafill SMA 6-48
PCL—New software delivery vehicle 6-48
Tasks associated with datafilling the SMA 6-48
Static datalog tracking 6-48
TR-303 Generic Interface 6-51

7 Introduction to Star Remote System 7-1

Understanding Star Remote System translations 7-1
Introduction to the Star Remote System 7-1
Voice and data communications 7-5
ISDN BRI signaling 7-9
Communication protocol 7-10
Signaling functions and capabilities 7-10
Star Remote System service capabilities 7-11
1-Meg Modem Service supported protocols 7-16
Preparing to datafill Star Remote System 7-18
Functional group for Star Remote System 7-18
Tasks associated with datafilling the Star Remote System 7-18
Procedures for datafilling the Star Remote System 7-18
Functional group for 1-Meg Modem on Star Hub 7-19
Tasks associated with datafilling the 1-Meg Modem service on Star Hub 7-19
Procedures for datafilling 1-Meg Modem service on Star Hub 7-19
Basic call processing 7-20
ESA operation for the Star Remote System 7-129
HSTP0 DMS ADSL Capability 7-151

NTP Summary Contents

Extended Peripheral Module Translations Reference Manual Volume 1 of 3

About this document **Vol. 1, xxi**

How to check the version and issue of this document Vol. 1, xxi
References in this document Vol. 1, xxi
What precautionary messages mean Vol. 1, xxii
How commands, parameters, and responses are represented Vol. 1, xxiii
Input prompt (>) Vol. 1, xxiii
Commands and fixed parameters Vol. 1, xxiii
Variables Vol. 1, xxiii
Responses Vol. 1, xxiv

1 XPM translations introduction **Vol. 1, 1-1**

2 Introduction to data tables **Vol. 1, 2-1**

Tuple properties Vol. 1, 2-1
Using the table editor Vol. 1, 2-2
Procedures for datafilling any system Vol. 1, 2-3
Input prompts and prompting mode Vol. 1, 2-3
Nonprompting mode Vol. 1, 2-4
Activating changes to tables Vol. 1, 2-4
Table editor commands Vol. 1, 2-4

3 Outside Plant Module **Vol. 1, 3-1**

Understanding OPM translations Vol. 1, 3-1
Introduction to the OPM Vol. 1, 3-1
Signaling for the OPM Vol. 1, 3-2
The OPM signaling links Vol. 1, 3-2
Message channels Vol. 1, 3-3
Signaling protocol Vol. 1, 3-3
The DMS-X protocol Vol. 1, 3-3
Signaling functions Vol. 1, 3-5
Call origination Vol. 1, 3-6
Tone generation Vol. 1, 3-6
Digit collection Vol. 1, 3-6
Dial pulse signaling Vol. 1, 3-7
DTMF signaling Vol. 1, 3-7

End-to-end signaling Vol. 1, 3-7
Ringing Vol. 1, 3-7
ESA signaling Vol. 1, 3-8
Preparing to datafill OPM Vol. 1, 3-8
PCL—New Software Delivery Vehicle Vol. 1, 3-8
Tasks associated with datafilling the OPM Vol. 1, 3-9
Procedures for datafilling procedures for the OPM Vol. 1, 3-9
Basic call processing Vol. 1, 3-11
OPM maintenance Vol. 1, 3-95
RLCM Intracalling Vol. 1, 3-106
RLCM ESA Operation Vol. 1, 3-112

4 Remote Line Concentrating Module Vol. 1, 4-1

Understanding RLCM translations Vol. 1, 4-1
Introduction to the RLCM Vol. 1, 4-1
Signaling for RLCM Vol. 1, 4-2
RLCM signaling links Vol. 1, 4-2
Message channels Vol. 1, 4-3
Signaling protocol Vol. 1, 4-3
DMS-X protocol Vol. 1, 4-3
Signaling functions Vol. 1, 4-5
Call origination Vol. 1, 4-6
Tone generation Vol. 1, 4-6
Digit collection Vol. 1, 4-6
Dial pulse signaling Vol. 1, 4-7
DTMF signaling Vol. 1, 4-7
End-to-end signaling Vol. 1, 4-7
Ringing Vol. 1, 4-7
ESA signaling Vol. 1, 4-8
Preparing to datafill RLCM Vol. 1, 4-8
PCL—New Software Delivery Vehicle Vol. 1, 4-8
Tasks associated with datafilling the RLCM Vol. 1, 4-9
Procedures for datafilling the RLCM Vol. 1, 4-9
Basic call processing Vol. 1, 4-11
ESA Operation RLCM Vol. 1, 4-94
HSTP0 DMS ADSL Capability Vol. 1, 4-119
RLCM Intracalling Vol. 1, 4-131

5 Outside Plant Access Cabinet Vol. 1, 5-1

Understanding OPAC translations Vol. 1, 5-1
Introduction to OPAC translations Vol. 1, 5-1
Signaling for OPAC Vol. 1, 5-2
OPAC signaling links Vol. 1, 5-3
Message channels Vol. 1, 5-3
Signaling protocol Vol. 1, 5-4
The DMS-X protocol Vol. 1, 5-4
Signaling functions Vol. 1, 5-6
Call origination Vol. 1, 5-6
Tone generation Vol. 1, 5-6
Digit collection Vol. 1, 5-6

Dial pulsing Vol. 1, 5-7
The DTMF signaling Vol. 1, 5-7
End-to-end Vol. 1, 5-7
Ringing Vol. 1, 5-7
The ESA signaling feature Vol. 1, 5-8
How to enter data in the OPAC Vol. 1, 5-8
The PCL—New Software Delivery Vehicle Vol. 1, 5-8
Tasks associated with entering data in the OPAC Vol. 1, 5-9
Procedures for datafilling the OPAC Vol. 1, 5-9
Basic call processing Vol. 1, 5-10
ESA Operation RLCM Vol. 1, 5-124
OPM Maintenance Vol. 1, 5-150
RLCM Intracalling Vol. 1, 5-161

6 Remote Switching Center Vol. 1, 6-1
Understanding RSC translations Vol. 1, 6-1
RSC development Vol. 1, 6-1
RSC services Vol. 1, 6-4
RSC configurations Vol. 1, 6-4
DS-1 electrical interface Vol. 1, 6-9
Preparing to datafill RSC Vol. 1, 6-9
PCL—New Software Delivery Vehicle Vol. 1, 6-9
Overview of datafill requirements Vol. 1, 6-10
Basic call processing Vol. 1, 6-14
Custom Local Area Signaling Service Vol. 1, 6-113
Dual Remote Cluster Controller Vol. 1, 6-140
Enhanced ESA (Lines and Trunks) Vol. 1, 6-164
ESA lines Vol. 1, 6-175
ESA (Lines and Trunks) Vol. 1, 6-193
HSTP0 DMS ADSL Capability Vol. 1, 6-224
New Peripheral Maintenance Vol. 1, 6-236
Trunking Vol. 1, 6-246
Firmware Downloading Vol. 1, 6-267
XPM-PLUS Vol. 1, 6-278

Extended Peripheral Module Translations Reference Manual Volume 2 of 3

1 XPM translations introduction Vol. 2, 1-1

2 Introduction to data tables Vol. 2, 2-1
Tuple properties Vol. 2, 2-1
Using the table editor Vol. 2, 2-2
Procedures for datafilling any system Vol. 2, 2-3
Input prompts and prompting mode Vol. 2, 2-3
Nonprompting mode Vol. 2, 2-4
Activating changes to tables Vol. 2, 2-4
Table editor commands Vol. 2, 2-4

3 Subscriber Carrier Module-100S Vol. 2, 3-1

Understanding SMS translations Vol. 2, 3-1
Signaling for SMS Vol. 2, 3-1
SMS-RCS signaling links Vol. 2, 3-1
Signaling protocols Vol. 2, 3-3
SMS-RCS signaling functions Vol. 2, 3-6
Preparing to datafill SMS Vol. 2, 3-16
PCL—New software delivery vehicle Vol. 2, 3-16
Tasks associated with the SMS-RCS system Vol. 2, 3-17
Protection lines Vol. 2, 3-17
Special services nailed-up cross connections Vol. 2, 3-17
Controlling RCS modes Vol. 2, 3-17
Static datalog tracking Vol. 2, 3-18
Basic call processing Vol. 2, 3-19
Custom Local Area Signaling Services Vol. 2, 3-121
Meridian Digital Centrex Basic Vol. 2, 3-148
Special Services Vol. 2, 3-150

4 Subscriber Carrier Module Urban Vol. 2, 4-1

SMU translations Vol. 2, 4-1
Introduction to subscriber carrier systems Vol. 2, 4-1
Subscriber carrier systems in the DMS-100 family Vol. 2, 4-1
The Subscriber Carrier Module-100 Urban Vol. 2, 4-3
Signaling for SMU Vol. 2, 4-4
SMU signaling links Vol. 2, 4-4
A-and B-bit signaling Vol. 2, 4-6
Per-channel signaling Vol. 2, 4-6
Coin signaling Vol. 2, 4-6
FXB special service signaling Vol. 2, 4-6
Message channels Vol. 2, 4-6
ISDN BRI signaling Vol. 2, 4-7
National ISDN-2/3 BRI Phase I Vol. 2, 4-8
MBS signaling Vol. 2, 4-9
Signaling protocols Vol. 2, 4-10
A-and B-bit messages Vol. 2, 4-10
DMS-X protocol Vol. 2, 4-10
Q.931 Digital Network Access protocol Vol. 2, 4-13
SMU signaling functions Vol. 2, 4-13
Peripheral processor (PP) SMU basic all processing Vol. 2, 4-14
Origination and channel allocation Vol. 2, 4-14
Tone generation Vol. 2, 4-15
Digit collection Vol. 2, 4-16
Ringing Vol. 2, 4-16
Automatic number identification Vol. 2, 4-17
Loss padding Vol. 2, 4-17
Messaging loss Vol. 2, 4-17
Busy/return to service of subscriber lines Vol. 2, 4-18
Limits to call processing Vol. 2, 4-18
SMU-RCU coin operation Vol. 2, 4-18
Coin operation limits and interactions Vol. 2, 4-21

RCU to SMU signaling Vol. 2, 4-21
SMU to computing module (CM) messages Vol. 2, 4-21
Preparing to datafill SMU Vol. 2, 4-22
PCL—New software delivery vehicle Vol. 2, 4-22
SMU static data update Vol. 2, 4-22
Static datalog tracking Vol. 2, 4-23
Basic Call Processing Vol. 2, 4-24
Custom Local Area Signaling Services Vol. 2, 4-120
Special Services Vol. 2, 4-142

5 Subscriber Carrier Module-100 Access Vol. 2, 5-1

Understanding SMA translations Vol. 2, 5-1
The Subscriber Carrier Module-100 Access Vol. 2, 5-1
SMA system summary Vol. 2, 5-1
SMA system functionality Vol. 2, 5-3
Introduction Vol. 2, 5-3
Voice and data communications Vol. 2, 5-3
DS-1 frame format Vol. 2, 5-3
Extended superframe format signaling Vol. 2, 5-4
Call setup, call take-down, and call monitoring Vol. 2, 5-6
Common signaling channel signaling Vol. 2, 5-6
Operation, administration, maintenance, and provisioning (OAM&P) Vol. 2, 5-7
EOC message signaling Vol. 2, 5-7
ISDN BRI signaling Vol. 2, 5-9
National ISDN-2/3 BRI Phase I feature Vol. 2, 5-9
Bellcore compliant ADSI tones and compatible voiceband data Vol. 2, 5-10
ADSI interactions Vol. 2, 5-11
ADSI limit Vol. 2, 5-11
ADSI hardware requirements Vol. 2, 5-11
Path protection switching Vol. 2, 5-12
SMA to S/DMS AccessNode path protection switching Vol. 2, 5-12
Manual path protection switching control Vol. 2, 5-13
Automatic path protection switching Vol. 2, 5-13
Manual and automatic protection switching limits Vol. 2, 5-14
Communication protocols Vol. 2, 5-14
Q.921 CCITT LAPD protocol Vol. 2, 5-14
Q.931 CCITT protocol Vol. 2, 5-15
Q.931 protocol message structure Vol. 2, 5-16
Protocol discriminator Vol. 2, 5-17
Call reference Vol. 2, 5-17
Message type Vol. 2, 5-18
Information element Vol. 2, 5-19
Q.931 message descriptions Vol. 2, 5-22
EOC communication protocol Vol. 2, 5-24
EOC protocol stack Vol. 2, 5-26
Applications router Vol. 2, 5-27
Operation entities Vol. 2, 5-27
DS30 protocol Vol. 2, 5-28
ADSI protocol Vol. 2, 5-30

Physical layer Vol. 2, 5-31
Data link layer Vol. 2, 5-31
Message layer Vol. 2, 5-31
Call processing Vol. 2, 5-31
Call processing (RDT to IDT) Vol. 2, 5-31
Time slot request Vol. 2, 5-31
Channel selection Vol. 2, 5-32
Sending addressing information Vol. 2, 5-32
Tone generation Vol. 2, 5-32
Call disconnection Vol. 2, 5-33
Flash detection Vol. 2, 5-34
Busy service of subscriber lines Vol. 2, 5-34
Call processing (IDT to RDT) Vol. 2, 5-34
Time slot request Vol. 2, 5-34
Network busy call treatment Vol. 2, 5-35
Channel selection Vol. 2, 5-35
Alerting Vol. 2, 5-35
On-hook transmission Vol. 2, 5-36
Custom local area signaling service (CLASS) calling number delivery (CND) Vol. 2, 5-36
Loss padding Vol. 2, 5-36
Call disconnection Vol. 2, 5-37
Flash detection Vol. 2, 5-37
Busy service of subscriber lines Vol. 2, 5-38
Call processing coin operation Vol. 2, 5-38
Coin commands Vol. 2, 5-38
Coin collect Vol. 2, 5-38
Coin return Vol. 2, 5-38
Coin presence Vol. 2, 5-38
Coin partial presence Vol. 2, 5-39
Battery commands Vol. 2, 5-39
Reverse battery Vol. 2, 5-39
Normal battery Vol. 2, 5-39
Subscriber line signaling Vol. 2, 5-39
Coin operations limits and interactions Vol. 2, 5-39
SMA service capabilities Vol. 2, 5-40
Plain ordinary telephone service (POTS) Vol. 2, 5-40
Coin operation service Vol. 2, 5-40
Coin first Vol. 2, 5-40
Coin dial-tone first Vol. 2, 5-41
Coin semi-postpay Vol. 2, 5-42
Coin call functionality Vol. 2, 5-42
Custom calling features for Meridian business sets (MBS) Vol. 2, 5-43
Message waiting indicator Vol. 2, 5-44
Message waiting lamp Vol. 2, 5-44
Meridian business set messaging Vol. 2, 5-44
Universal tone receiver services Vol. 2, 5-45
Direct Outward Dial (DOD) Vol. 2, 5-45
Custom local area signaling service Vol. 2, 5-45
Meridian Digital Centrex (MDC) features on 500/2500 sets and attendant consoles Vol. 2, 5-45

Multiple appearance directory number (MADN) feature Vol. 2, 5-46
MADN members provisioning Vol. 2, 5-46
Off-premise extension (bridged service) Vol. 2, 5-47
Private branch exchange (PBX) central office access Vol. 2, 5-47
Residential services Vol. 2, 5-47
Secretarial line Vol. 2, 5-47
Teen service Vol. 2, 5-47
Toll diversion Vol. 2, 5-48
Wide area telecommunications services Vol. 2, 5-48
800 service Vol. 2, 5-48
ISDN services Vol. 2, 5-48
Ringing Vol. 2, 5-49
Dialing Vol. 2, 5-49
Tones Vol. 2, 5-49
SMA line card support Vol. 2, 5-49
Deluxe Spontaneous Call Waiting Identification Vol. 2, 5-50
Preparing to datafill SMA Vol. 2, 5-56
PCL—New software delivery vehicle Vol. 2, 5-56
Tasks associated with datafilling the SMA Vol. 2, 5-56
Static datalog tracking Vol. 2, 5-56
When to update static data Vol. 2, 5-57
Dynamic static date update Vol. 2, 5-58
DMS recognition of the switching unit and all remote locations Vol. 2, 5-58
Base SCM Access Vol. 2, 5-60

6 Subscriber Carrier Module-100 Access MVI-20 Vol. 2, 6-1

Understanding SMA translations Vol. 2, 6-1
The Subscriber Carrier Module-100 Access Vol. 2, 6-1
SMA system overview Vol. 2, 6-1
SMA system functionality Vol. 2, 6-3
Introduction Vol. 2, 6-3
Voice and data communications Vol. 2, 6-3
DS-1 frame format Vol. 2, 6-3
Extended superframe format signaling Vol. 2, 6-4
Call setup, call take-down, and call monitoring Vol. 2, 6-6
TR-303 hybrid signaling Vol. 2, 6-6
Operation, administration, maintenance, and provisioning (OAM&P) Vol. 2, 6-9
EOC message signaling Vol. 2, 6-9
ISDN BRI signaling Vol. 2, 6-10
National ISDN-2/3 BRI Phase I feature Vol. 2, 6-11
Bellcore compliant ADSI tones and compatible voiceband data Vol. 2, 6-11
ADSI interactions Vol. 2, 6-13
ADSI restriction Vol. 2, 6-13
ADSI hardware requirements Vol. 2, 6-13
Path protection switching Vol. 2, 6-13
SMA to generic RDT path protection switching Vol. 2, 6-14
Manual path protection switching control Vol. 2, 6-15
Automatic path protection switching Vol. 2, 6-15

Manual and automatic protection switching restrictions Vol. 2, 6-16
Communication protocols Vol. 2, 6-16
Q.921 CCITT LAPD protocol Vol. 2, 6-16
Q.931 CCITT protocol Vol. 2, 6-17
EOC communication protocol Vol. 2, 6-23
DS30 protocol Vol. 2, 6-26
ADSI protocol Vol. 2, 6-29
Call processing Vol. 2, 6-30
Call processing (RDT to IDT) Vol. 2, 6-30
Call processing (IDT to RDT) Vol. 2, 6-33
Call processing coin operation Vol. 2, 6-36
SMA service capabilities Vol. 2, 6-38
Plain ordinary telephone service (POTS) Vol. 2, 6-38
Coin operation service Vol. 2, 6-38
Coin call functionality Vol. 2, 6-40
Universal tone receiver services Vol. 2, 6-40
Custom local area signaling service Vol. 2, 6-40
Meridian Digital Centrex (MDC) features on 500/2500 sets and attendant consoles Vol. 2, 6-40
Off-premise extension (bridged service) Vol. 2, 6-40
Private branch exchange (PBX) central office access Vol. 2, 6-41
Residential services Vol. 2, 6-41
Secretarial line Vol. 2, 6-41
Teen service Vol. 2, 6-41
Toll diversion Vol. 2, 6-41
Wide area telecommunications services Vol. 2, 6-41
800 service Vol. 2, 6-41
ISDN services Vol. 2, 6-41
Ringing Vol. 2, 6-42
Dialing Vol. 2, 6-43
Tones Vol. 2, 6-43
Deluxe Spontaneous Call Waiting Identification Vol. 2, 6-43
Preparing to datafill SMA Vol. 2, 6-48
PCL—New software delivery vehicle Vol. 2, 6-48
Tasks associated with datafilling the SMA Vol. 2, 6-48
Static datalog tracking Vol. 2, 6-48
TR-303 Generic Interface Vol. 2, 6-51

7 Introduction to Star Remote System Vol. 2, 7-1

Understanding Star Remote System translations Vol. 2, 7-1
Introduction to the Star Remote System Vol. 2, 7-1
Voice and data communications Vol. 2, 7-5
ISDN BRI signaling Vol. 2, 7-9
Communication protocol Vol. 2, 7-10
Signaling functions and capabilities Vol. 2, 7-10
Star Remote System service capabilities Vol. 2, 7-11
1-Meg Modem Service supported protocols Vol. 2, 7-16
Preparing to datafill Star Remote System Vol. 2, 7-18
Functional group for Star Remote System Vol. 2, 7-18
Tasks associated with datafilling the Star Remote System Vol. 2, 7-18

Procedures for datafilling the Star Remote System Vol. 2, 7-18
Functional group for 1-Meg Modem on Star Hub Vol. 2, 7-19
Tasks associated with datafilling the 1-Meg Modem service on Star Hub Vol. 2, 7-19
Procedures for datafilling 1-Meg Modem service on Star Hub Vol. 2, 7-19
Basic call processing Vol. 2, 7-20
ESA operation for the Star Remote System Vol. 2, 7-129
HSTP0 DMS ADSL Capability Vol. 2, 7-151

Extended Peripheral Module Translations Reference Manual Volume 3 of 3

1 XPM translations introduction Vol. 3, 1-1

2 Introduction to data tables Vol. 3, 2-1

Tuple properties Vol. 3, 2-1
Using the table editor Vol. 3, 2-2
Procedures for datafilling any system Vol. 3, 2-3
Input prompts and prompting mode Vol. 3, 2-3
Nonprompting mode Vol. 3, 2-4
Activating changes to tables Vol. 3, 2-4
Table editor commands Vol. 3, 2-4
TR-303 Generic Interface Vol. 3, 2-7

3 Expanded Subscriber Carrier Module-100 Access (ESMA) Vol. 3, 3-1

Understanding SMA2 translations Vol. 3, 3-1
Introduction Vol. 3, 3-1
The SMA2 Vol. 3, 3-1
SMA system overview Vol. 3, 3-3
SMA system functionality Vol. 3, 3-5
Introduction Vol. 3, 3-5
Voice and data communications Vol. 3, 3-5
DS-1 frame format Vol. 3, 3-5
Superframe format signaling Vol. 3, 3-6
Extended superframe format signaling Vol. 3, 3-8
FXS signaling for ICB Vol. 3, 3-10
FXS signaling Vol. 3, 3-10
Call setup, call take-down, and call monitoring Vol. 3, 3-13
TR-303 hybrid signaling Vol. 3, 3-14
Robbed bit signaling Vol. 3, 3-14
Time-slot management channel signaling Vol. 3, 3-16
Common signaling channel signaling Vol. 3, 3-17
Operation, administration, maintenance, and provisioning (OAM&P) Vol. 3, 3-18
EOC message signaling Vol. 3, 3-18

ISDN BRI signaling Vol. 3, 3-19
National ISDN-2/3 BRI Phase I feature Vol. 3, 3-20
Bellcore compliant ADSI tones and compatible voiceband data Vol. 3, 3-21
ADSI interactions Vol. 3, 3-22
ADSI restriction Vol. 3, 3-22
ADSI hardware requirements Vol. 3, 3-22
Path protection switching Vol. 3, 3-22
SMA2 to generic RDT path protection switching Vol. 3, 3-23
SMA2 to S/DMS AccessNode path protection switching Vol. 3, 3-23
Manual path protection switching control Vol. 3, 3-24
Automatic path protection switching Vol. 3, 3-24
Manual and automatic protection switching restrictions Vol. 3, 3-25
Communication protocols Vol. 3, 3-25
Q.921 CCITT LAPD protocol Vol. 3, 3-25
Q.931 CCITT protocol Vol. 3, 3-26
Q.931 protocol message structure Vol. 3, 3-28
Protocol discriminator Vol. 3, 3-28
Call reference Vol. 3, 3-29
Message type Vol. 3, 3-29
Information element Vol. 3, 3-30
Q.931 message descriptions Vol. 3, 3-34
EOC communication protocol Vol. 3, 3-36
EOC protocol stack Vol. 3, 3-38
Applications router Vol. 3, 3-39
Operation entities Vol. 3, 3-39
DS30 protocol Vol. 3, 3-39
ADSI protocol Vol. 3, 3-42
Physical layer Vol. 3, 3-43
Data link layer Vol. 3, 3-43
Message layer Vol. 3, 3-43
Call processing Vol. 3, 3-43
Call processing (RDT to IDT) Vol. 3, 3-43
Time slot request Vol. 3, 3-43
Channel selection Vol. 3, 3-44
Sending addressing information Vol. 3, 3-44
Tone generation Vol. 3, 3-44
Call disconnection Vol. 3, 3-45
Flash detection Vol. 3, 3-45
Busy service of subscriber lines Vol. 3, 3-46
Call processing (IDT to RDT) Vol. 3, 3-46
Time slot request Vol. 3, 3-46
Network busy call treatment Vol. 3, 3-46
Channel selection Vol. 3, 3-47
Alerting Vol. 3, 3-47
On-hook transmission Vol. 3, 3-48
Custom local area signaling service (CLASS) calling number delivery (CND) Vol. 3, 3-48
Loss padding Vol. 3, 3-48
Call disconnection Vol. 3, 3-48
Flash detection Vol. 3, 3-49
Busy service of subscriber lines Vol. 3, 3-49

Call processing coin operation Vol. 3, 3-49
Coin collect Vol. 3, 3-50
Coin return Vol. 3, 3-50
Coin presence Vol. 3, 3-50
Coin partial presence Vol. 3, 3-50
Battery commands Vol. 3, 3-50
Reverse battery Vol. 3, 3-50
Normal battery Vol. 3, 3-51
Subscriber line signaling Vol. 3, 3-51
Coin operation limits and interactions Vol. 3, 3-51
SMA2 service capabilities Vol. 3, 3-51
Plain ordinary telephone service (POTS) Vol. 3, 3-51
Coin operation service Vol. 3, 3-52
Coin first Vol. 3, 3-52
Coin dial-tone first Vol. 3, 3-53
Coin semi-postpay Vol. 3, 3-53
Coin call functionality Vol. 3, 3-54
Message waiting indicator Vol. 3, 3-54
Message waiting lamp Vol. 3, 3-54
Meridian business set messaging Vol. 3, 3-54
MBS on AccessNode Vol. 3, 3-55
MBS on MVI RDT Vol. 3, 3-55
Universal tone receiver services Vol. 3, 3-55
Direct Outward Dial (DOD) Vol. 3, 3-56
Custom local area signaling service Vol. 3, 3-56
Meridian Digital Centrex (MDC) features on 500/2500 sets and attendant consoles Vol. 3, 3-56
Off-premise extension (bridged service) Vol. 3, 3-57
Private branch exchange (PBX) central office access Vol. 3, 3-58
Residential services Vol. 3, 3-58
Secretarial line Vol. 3, 3-58
Teen service Vol. 3, 3-58
Toll diversion Vol. 3, 3-58
Wide area telecommunications services Vol. 3, 3-58
800 service Vol. 3, 3-58
ISDN services Vol. 3, 3-59
Ringing Vol. 3, 3-59
Dialing Vol. 3, 3-60
Tones Vol. 3, 3-60
Deluxe Spontaneous Call Waiting Identification Vol. 3, 3-60
Preparing to datafill SMA2 Vol. 3, 3-66
PCL—New software delivery vehicle Vol. 3, 3-66
Tasks associated with datafilling SMA2 Vol. 3, 3-66
Static datalog tracking Vol. 3, 3-67
DMS recognition of the switching unit and all remote locations Vol. 3, 3-68
SCM-100 Software for AccessNode Vol. 3, 3-70
SMA ICB Links Vol. 3, 3-211

4 Remote Switching Center-SONET Vol. 3, 4-1

Understanding RSC-S translations Vol. 3, 4-1
- RSC-S development Vol. 3, 4-1
- RSC-S development schedule Vol. 3, 4-2
- Differences between RSC and RSC-S Vol. 3, 4-2
- Software functionality Vol. 3, 4-2
- Revised system architecture Vol. 3, 4-3
- Packaging Vol. 3, 4-3
- Cabinetized remote switching center cabinet Vol. 3, 4-4
- CRSC extension unit Vol. 3, 4-5
- Cabinetized line modules Vol. 3, 4-6
- Cabinetized power distribution center cabinet Vol. 3, 4-7
- Cabinetized miscellaneous equipment cabinet Vol. 3, 4-7
- Cabinetized miscellaneous spares storage cabinet Vol. 3, 4-7
- RSC-S services Vol. 3, 4-7
- RSC-S configurations Vol. 3, 4-8
- DS-1 electrical interface Vol. 3, 4-13

Signaling for RSC-S Vol. 3, 4-14
- Signal additions Vol. 3, 4-14
- DDL signaling to SLC-96 Vol. 3, 4-14
- Incoming DDL Vol. 3, 4-14
- Outgoing DDL Vol. 3, 4-14
- DDL for extended superframe Vol. 3, 4-14
- DDL processing Vol. 3, 4-15
- Extended frame format Vol. 3, 4-15
- SONET format Vol. 3, 4-16

Preparing to datafill RSC-S Vol. 3, 4-16
- PCL—New Software Delivery Vehicle Vol. 3, 4-16
- Collecting end-user data Vol. 3, 4-17
- Configurations Vol. 3, 4-17
- Overview of datafill requirements Vol. 3, 4-18
- Activating the RSC-S Vol. 3, 4-18
- Datafilling dynamic trunks Vol. 3, 4-18
- When to update the RCC2 static data Vol. 3, 4-18
- Alarms produced when a static data mismatch occurs Vol. 3, 4-19
- TUPC logs for static data updates Vol. 3, 4-19
- Types of TUPC logs Vol. 3, 4-19
- TUPC log format Vol. 3, 4-20
- SERVORD option NPGD for line cards NT6X18AA and NT6X18AB Vol. 3, 4-20

Basic call processing Vol. 3, 4-22
Custom Local Area Signaling Services Vol. 3, 4-108
Trunks Vol. 3, 4-135
ESA Lines Vol. 3, 4-149
ESA Lines and Trunks Vol. 3, 4-166
Dual Remote Cluster Controller 2 Vol. 3, 4-185
ISDN operations Vol. 3, 4-201
Downloading firmware Vol. 3, 4-271
Subscriber Module SLC-96/Remote Vol. 3, 4-288
Enhanced ESA (Lines and Trunks) Vol. 3, 4-311

Enhanced ESA for ISDN (Lines Only) Vol. 3, 4-328
Enhanced ESA for ISDN (Lines and Trunks) Vol. 3, 4-339
HSTP0 DMS ADSL Capability Vol. 3, 4-355

5 Subscriber Carrier Module-100S Remote Vol. 3, 5-1

Understanding SMS-R translations Vol. 3, 5-1
Signaling for SMS-R Vol. 3, 5-1
- SMS-R/RCS signaling links Vol. 3, 5-1
- Signaling protocols Vol. 3, 5-3
- SMS-R/RCS signaling functions Vol. 3, 5-7

Preparing to datafill SMS-R Vol. 3, 5-17
- PCL—New software delivery vehicle Vol. 3, 5-17
- Tasks associated with datafilling the SMS-R/RCS system Vol. 3, 5-17
- Protection lines Vol. 3, 5-18
- Special services nailed-up cross-connections Vol. 3, 5-18
- Controlling RCS modes Vol. 3, 5-18
- Static datalog tracking Vol. 3, 5-18

Basic Call Processing Vol. 3, 5-21
Special Services Vol. 3, 5-98
Custom Local Area Signaling Services Vol. 3, 5-107
Meridian Digital Centrex Basic Vol. 3, 5-117

1 XPM translations introduction

This extended peripheral module (XPM) translations reference manual provides a product overview; translations datafill procedures; description of basic and optional XPM feature capabilities; and describes how specific tables activate, deactivate, or alter product capabilities for the following XPMs:

- Outside Plant Access Cabinet (OPAC)
- Remote Line Concentrating Module (RLCM)/Outside Plant Module (OPM)
- Remote Switching Center (RSC)
- Remote Switching Center-SONET (Synchronous Optical Network) (RSC-S)
- Subscriber Carrier Module-100 Access (SMA)
- Subscriber Carrier Module-100S (SMS)
- Subscriber Carrier Module-100S Remote (SMS-R)
- Subscriber Carrier Module-100 Urban (SMU)

2 Introduction to data tables

The translations database contains numerous data tables. Each table has a specific purpose and contains a certain type of data. Datafilling is the term used to describe the process of entering the specific data into a table. The following section describes the composition of data tables.

Data associated with hardware and software systems of the Digital Multiplex System (DMS) switch are stored in the form of two-dimensional entities called tables.

A table consists of rows and columns. A row is called a *tuple*. Columns represent *fields* in a tuple. Refer to the following figure for examples of a table, subtable, and sub-subtable.

Each field has a unique field name consisting of a maximum of eight characters. The field name is used as a prompt for data input.

A field is either a single-element field or a multiple-element field with subfields. A field or subfield contains data expressed in the form of numbers or alphanumeric strings.

Tuple properties

Each tuple is identified by a unique key.

A key always contains the first field. For most tables, the key comprises only one field. In other tables, more than one field of data is required to make the key unique. In this case, the first field plus one or more subsequent fields in the tuple are used to make up the key.

Tuples are referenced either by their key or by the table editor (TE) cursor. The cursor is an internal pointer to a tuple of a table. It can be moved by using TE commands, such as POSITION, LIST, BOTTOM, and TOP. Refer to the following table for a description of TE commands.

The tuple the cursor points to, at any given time, is called the current tuple.

Figure 2-1 Examples of table, subtable, and sub-subtable

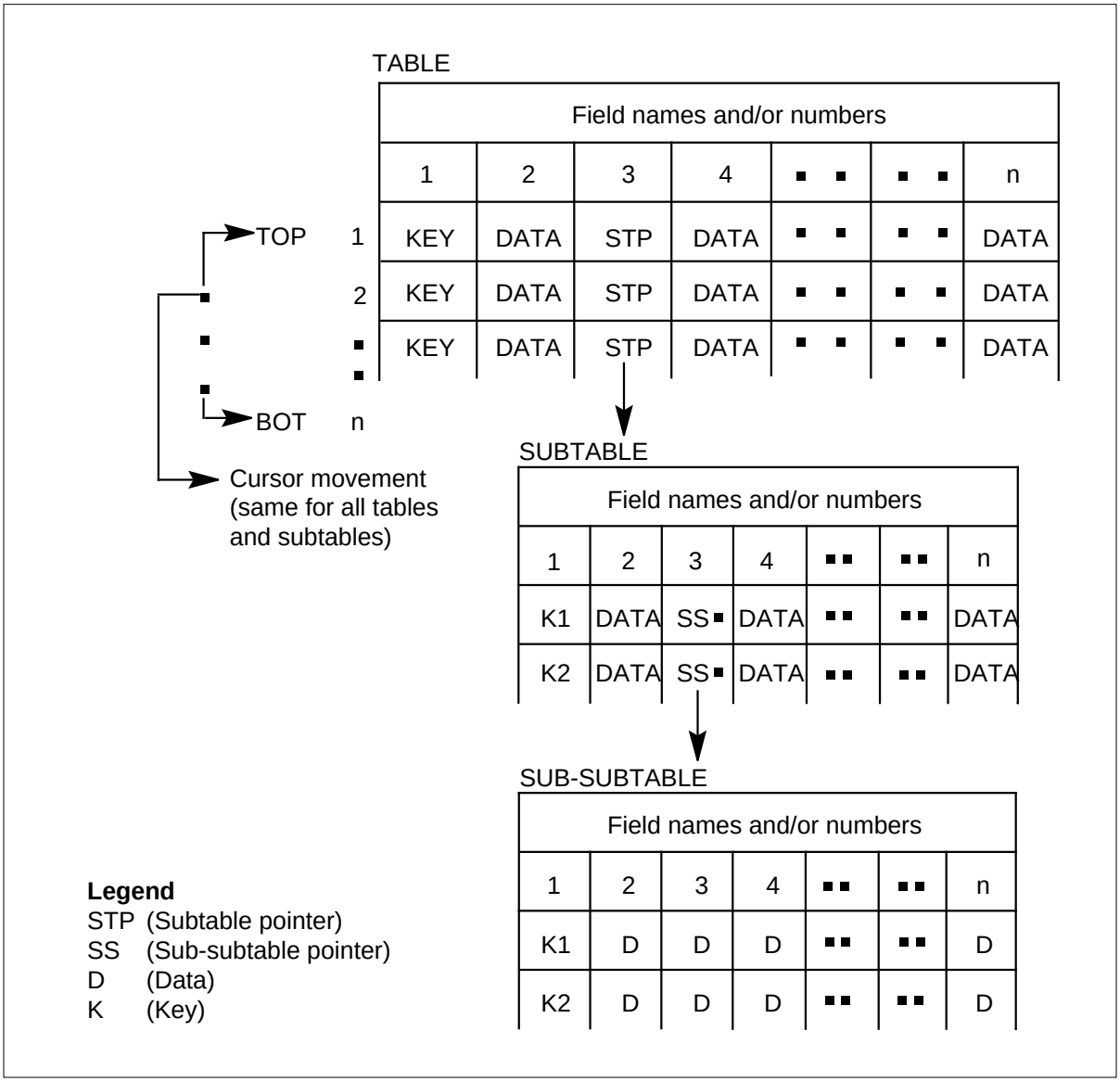

Using the table editor

The TE is a set of commands used to modify the data contained in the DMS-100 control tables. The commands are entered at the MAP terminal.

Note: Only two subtable levels are supported.

The TE allows users to perform the following functions:

- add, delete, or change tuples or fields in a table or subtable
- list one or more tuples of a table or subtable

- move the cursor to display any tuple in a table or subtable
- display specified valid field values
- search for tuples containing specified field values

Procedures for datafilling any system

The datafill procedures in this section list the field and subfield names of the key tables that must be datafilled for any system. Explanations of each field and subfield are also provided. Examples of field entries are provided for most fields and subfields. The examples correspond to the example configuration shown in the previous table and to examples of tuples displayed at the end of each procedure.

Input prompts and prompting mode

A prompt is the system way of notifying the user the data entered is not complete or is not in defined parameters. When a prompt occurs, the user is provided the name of the required field or parameter. The user has the following options:

- input correct data entirely on the current line
- enter ABORT to exit the command and to exit the input and prompt mode
- enter invalid data, which causes the system to provide additional information about the field or parameter

If the tuple being datafilled has multiple list items, prompting continues until the maximum list length is reached or until a single dollar sign ($) is entered.

Nonprompting mode

DANGER

Possible loss of service if using the NONPROMPT mode

In all tables which have fields with multiple entries such as, OPTCARD, EXECTAB, CSLINKTAB, and PSLINKTAB, do not use the NONPROMPT mode of datafill. All entries of a field must be entered in one entry when using the NONPROMPT mode. All entries that are not datafilled in the NONPROMPT mode will be deleted from the table. Operating company personnel will not be prompted for additional entries in a field unless they are in the PROMPT mode which steps through each individual value. The PROMPT mode is the only mode that should be used when making datafill changes to multiple entry fields.

All commands are initially processed in the nonprompting mode. After recognizing a valid command, one field value is processed at a time until either the end of the input line is reached ($) or an error is found.

A tuple can be added all at once by stringing subsequent field values together, leaving a blank space between each field value, and by indicating the end of the string with a dollar sign ($). If the information for one tuple exceeds one input line a plus sign (+) is placed as the last character on the line. This will enable the contents of the current line and the next line to be processed as a single input.

Activating changes to tables

After the TE checks that input data is complete and valid, a data modification order (DMO) is created. The DMO is then applied to change the appropriate table data.

Table editor commands

The following table lists all TE commands and provides a description for and parameters of each command.

Table 2-1 editor commands (Sheet 1 of 3)

Command	Description
TABLE *table name*	Opens the table *table name.*
ADD	Adds the tuple given as a parameter to the table or, if no parameters are given, prompts for each field for user input.

Table 2-1 editor commands (Sheet 2 of 3)

Command	Description
BOTtom	Positions the cursor at bottom of the table.
CHAnge	Changes the specified fields to the specified values. If no fields are specified, each field is prompted for user input.
COUNT condition	Counts the number of tuples in the table that meet specified conditions, and positions the cursor at the first tuple.
DELete KEY	Deletes the tuple containing the specified key. If no parameters are given, the current tuple is deleted.
DISplay	Displays the current tuple without the heading.
DOWn n	Moves the cursor down a specified number of tuples. A display of the tuple without the heading follows.
FIRST	Positions the cursor at the first tuple in the table or subtable, but does not display it.
HEADING	Displays the current tuple heading line or lines, showing tuple format.
HELp command name	Displays a brief description of the function of the desired TE command.
LAST	Positions the cursor at the last tuple in the table or subtable without displaying the tuple.
LIST n *or* all condition	Displays one or more tuples of the current table, as follows: • *n* is the number of tuples to be displayed, starting with the current tuple. • *all* includes all tuples of the current table displayed beginning at the first tuple, regardless of cursor position. • The condition command parameter is conditional and all tuples meeting the condition are listed. It is used in conjunction with the n and all parameters.
NEXT	Positions the cursor at the tuple following the current tuple but does not display it.
OVErride	Cancels the prompt that occurs when the CPUs are out-of-sync or when the journal file is not available.
POSition KEY	Positions the cursor at a specified tuple and causes the tuple to be displayed.

Table 2-1 editor commands (Sheet 3 of 3)

Command	Description
QUIt all	Exits the user from the current table if QUIT is entered. The parameter *all* causes the system to quit all tables accessed during the table editor session and returns directly to the command interpreter (CI) level of the MAP terminal.
RANge field	Displays the parameter range for the fields of the current tuple.
RETurn	Returns from sub-subtable to subtable or from a subtable to a main table.
SUBtable field name or field#	Opens and enters the subtable from a main table. The main table must be entered first before its subtable(s) can be accessed. If there is more than one subtable, the field name or the field number associated with it must be specified. When no parameters are entered, only one field points to a subtable and that subtable is entered.
TOP	Positions the cursor at the first tuple in the table and displays the tuple field data.
UP	Moves the cursor up by the specified number of tuples and displays the field data without headings.
VERify ON or OFF	Sets a verify mode, which delays execution of subsequent commands and lets a user check the display, as follows: • ON causes the system to prompt the user to confirm that the tuple addition, change, replacement, or deletion data is correct. • OFF causes the system to execute the command as entered, without confirmation from the user.

3 Subscriber Carrier Module-100S

Understanding SMS translations

The Subscriber Carrier Module-100S (SMS) provides an interface between TR-008-compliant digital loop carrier systems and the DMS-100 network.

The name remote concentrator SLC-96 refers to TR-008-compliant, digital loop carrier system equipment. Short versions of the name, RCS and SLC-96, also refer to this equipment.

Signaling for SMS

This section describes the signaling protocols that the subscriber module SLC-96/remote concentrator SLC-96 (SMS-RCS) subsystem uses. The following sections describe the following:

- SMS-RCS signaling format.
- signaling protocols.
- features that the SMS-RCS signaling format and signaling protocols support.

SMS-RCS signaling links

The SMS and the RCS use an extended superframe format to exchange information on DS-1. The DS-1 lines operate at a rate of 1.544 Mbps with a sample frequency of 8000 frames each second.

The DS-1 link contains 24 channels. Each channel contains 8-bit pulse code modulation (PCM) data. A stuffing or S-bit refers to a framing bit. The framing bit is at the front of the sequence. The framing bit makes sure that the SMS and the RCS recognize the start of each 24-channel sequence. The system sends 192 bits of information and a framing bit during each 24-channel sequence. The 192 bits of information and the framing bit are a channel frame.

The channel frames carry speech information, signaling information, or operations information. The format of a DS-1 frame appears in the following figure.

Figure 3-1 DS-1 frame format

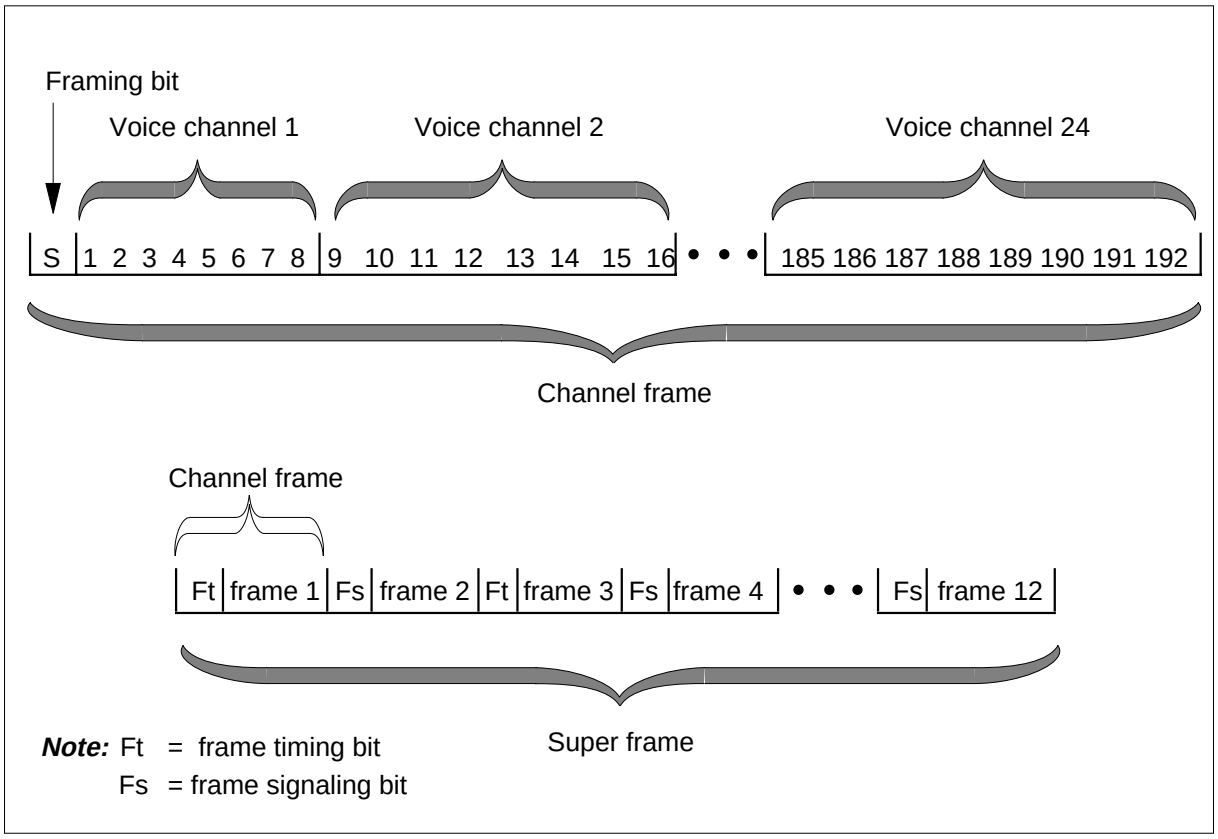

The above diagram is a graphic of a super frame. A super frame contains 12 channel frames. A DDL frame contains six super frames or 72 channel frames. The DDL frame does not appear in the diagram.

The 24-bit pattern conveys three types of information:

- frame pattern sequence
- facility data link performance
- cyclic redundancy check

The frame pattern sequence (FPS) is 001110. Every fourth framing bit that begins at the fourth bit carries an FPS bit. The FPS and the cyclic redundancy check (CRC) define an in-frame condition.

The 4 Kbit for each second facility data link (FDL) bit begins with the first framing bit. The channel frames carry an FDL messaged bit every other frame.

The CRC bit begins with the second bit. The channel frames carry the CRC every fourth bit. The system checks a block check field six times in an

extended super frame. The CRC-6 check detects bits that emulate an FSP bit. The CRC-6 check determines if an out-of-frame condition is present.

Signaling protocols

The SMS-RCS subsystem use the following signaling protocols to communicate and provide subscriber services:

- A-bit and B-bit messaging
- Derived data link (DDL) messaging
- Nailed-up cross-connections

A-bit and B-bit messages

The least significant bits from each channel are stolen in every sixth and twelfth channel frame. The bits are stolen at the RCS transmit/receive unit card or at the SMS time switch. The A-bits replace the least significant bits from the sixth frame. The B-bits replace the least significant bits from the twelfth frame. The A-bits and B-bits pass information that relates to specified channels.

An 8085 microprocessor on the A/B DDL message card sends A-bits and B-bits to the time switch. The time switch inserts the A-bits and B-bits in the PCM data sent to the DS-1 lines. The 8085 microprocessor also extracts A-bits and B-bits from the PCM data that the microprocessor receives from the time switch. The SMS signaling processor (SP) processes the A-bit and B-bits.

DDL messages

The framing bits appear in the earlier figure. The framing bits that channel frames use alternate between frame timing bits (Ft) and frame signaling bits (Fs). Each superframe has the same sequence of six Ft bits and six Fs bits.

Ft bits identify the first time slot in each channel frame. The Fs bits identify the A- (sixth) and B- (twelfth) channel frames of a superframe. The A-frame carries A-bits. The B-frame carries B-bits. The framing pattern of Ft and Fs bits follows:

```
1(Ft) 0(Fs) 0(Ft) 0(Fs) 1(Ft) 1(Fs) 0(Ft) 1(Fs) 1(Ft) 1(Fs)
0(Ft) 0(Fs)
```

The Fs bits form the frame signaling pattern. The frame signaling pattern follows:

```
111 000 111 000
```

These 12 bits transfer the signaling pattern from two superframes. The next four superframes are robbed of the Fs bits of the superframe. The Fs bits are stolen at the transmit receive unit card in the RCS or at the time switch card in

the SMS. The system inserts special supervisory bits to replace the Fs bits. The 24 consecutive supervisory bits form a specified data link. The data link is a derived data link (DDL).

The DDL is a 2.2 kilobit/second (Kb/s) data path of supervisory bits always present on the RCS, A-link. The DDL is present on the C-link if shelf group CD is in Mode II. The system uses only a part of the DDL (the C-field).

DMS-X protocol

The DMS-X protocol is a half-duplex protocol on DS30A links between the remote cluster controller RCC and the SMS. The DMS-X protocol includes a CRC code for error detection.

The DMS-X protocol is a process between terminals. This process contains handshaking messages. Two terminals that transfer messages inform each other of the present condition of each terminal. This condition relates to messaging. A general form of handshaking protocol comprises the DMS-X protocol. The general form appears in the following figure.

Figure 3-2 DMS-X handshaking protocol

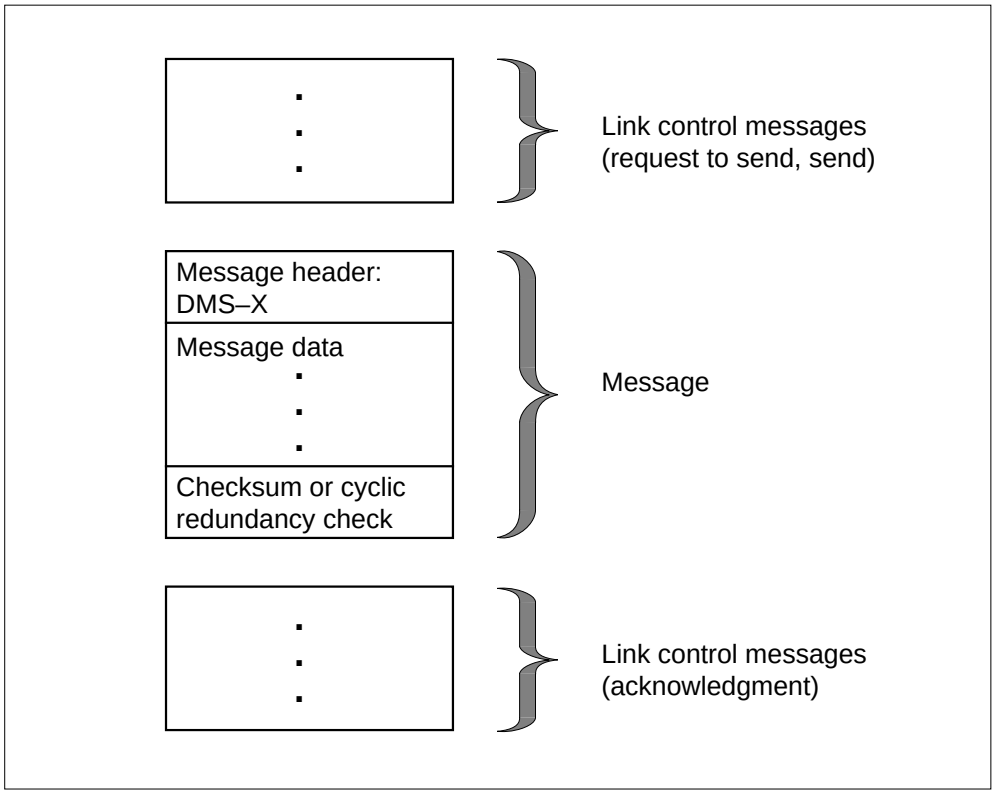

Message time-out and message checksum or CRC calculation perform message error detection. The sending node attempts the send sequence again

when protocol, checksum, or CRC fails on an outgoing message. On an incoming message failure, the sending node routes the message again over an alternate control side (C-side) link. Hardware redundancies provide a minimum of one optional path to and from a node. The format of DMS-X messages appears in the following figure.

Figure 3-3 DMS-X message format

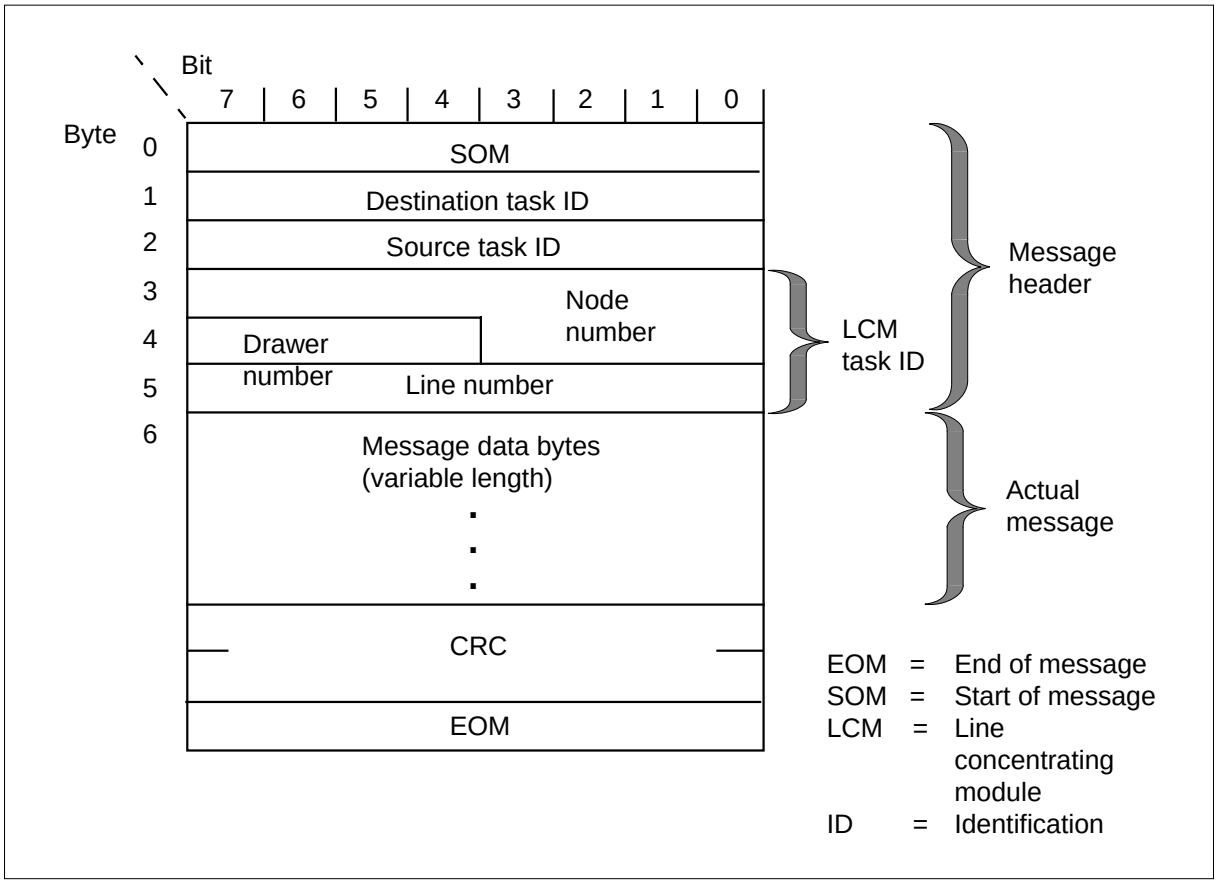

The system transmits a message on a link. The link control messages precede and follow the message. Messaging occurs between programs that operate in the SMS and in the RCC. Many tasks for processes communicate with other tasks through messages on the DS30A links.

The DMS-X message header is the first six bytes as follows:

- The first byte is the start of message.
- The second byte is the destination task identification (ID) of the message. This ID identifies the process to receive the message in an outgoing message.

- The third byte is the source task ID. This ID identifies the process that sent the message in an incoming message.
- The last three bytes are the task ID number.

The number of bytes in the accurate message or data differ. The CRC occupies two bytes. The CRC detects transmission errors. The end of message occupies one byte.

Nailed-up cross-connections

Software arranges and maintains a nailed-up cross-connection to support applications that require special-service cards. The term hairpin connection refers to the nailed-up cross-connection. The cross-connection is a peripheral-side (P-side) cross-connection. All information flows from an RCS to the SMS.

Information from the SMS is switched to a DS-1 line that leads to a second RCS or other piece of digital equipment. The information is not switched through the network.

SMS-RCS signaling functions

A-bit and B-bit messaging

A-bit and B-bit messaging supports the subscriber services that the following sections describe.

Plain ordinary telephone service (POTS)

The POTS is available for single-party and multiparty. Multiparty includes two-party automatic number identification (ANI) and four-party or eight-party operator number identification (ONI).

Coin features

Coin first (CCF) and dial tone first (CDF) are available as coin features.

The SMS sends the following signaling information to the RCS for each channel:

- start or stop ringing
- start or stop forward disconnect
- scan for on-hook and off-hook
- collect ANI/Coin information
- collect channel maintenance information

The SMS collects return signaling information from the RCS that includes the following data:

- call origination
- call disconnect
- digit collection
- ANI/coin
- answer
- flash

The A-bit and B-bit messages are decoded in a different way for each type of RCS line card. For example, a pattern for a single-party line card does not indicate the same item as the same pattern indicates for a coin card.

Universal tone receiver (UTR) features

The RCS lines that subtend an SMS can use the optional UTR feature. The UTR feature allows the removal of a part of the processing load from the central control (CC). The URT feature allows the installation of the processing load part in the peripheral module (PM).

If the UTR feature is on the SMS, the SMS performs all digit collection functions at the originating terminal. These functions include:

- allocation of a free receiver
- establishment of a path to the receiver
- collection and process of digits
- deallocation of the receiver

The CC conveys the need for a receiver to the SMS with a UTR. The SMS performs the following steps:

Procedure 3-1

1 Request a UTR channel.

2 Instruct the UTR to monitor tones.

3 When the UTR starts to monitor tones, the SMS receives notification of digits. The SMS normally performs several translations functions on the digits.

4 When the receiver is not required, the SMS frees the allocated UTR channel.

From this point on the call proceeds as usual. A receiver request starts the sequence. If the request arrives from a SMS without a UTR, processing continues.

Call processing features

Coin call and Automatic Number Identification (ANI) processing are grouped as one feature. The software and hardware that starts the coin call and ANI processing are the same.

Coin features apply to coin dial-tone first (CDF) and coin first (CCF) lines. The features perform the following:

- scan for off-hook
- check for coin presence
- check for coin presence during local call overtime
- return coins
- collect coins

The ANI determines if a two-party line is active from the tip or the ring side of the line. The ANI requests the correct billing responsibility for a call.

Use of the ANI and coin features occurs through A-bit and B-bit signaling patterns. Transmission of these patterns occurs between the SMS and the RCS. These signaling patterns contain A-bit and B-bits. A maximum of nine signaling states are possible. The SMS transmits the following signals to the RCS:

- negative loop mode
- channel test
- positive loop mode
- ground start
- -R ringing
- positive coin check
- positive coin control
- negative coin control
- negative coin check

The RCS transmits the following signals to the SMS in response to SMS signals:

- on-hook
- off-hook
- coin ground
- unequipped

These signaling states are associated with specified A-bit and B-bit patterns. The Bellcore document *Digital Interface Between the SLC96 Digital Loop Carrier System and a Local Digital Switch*, TR-TSY-00000,. describes the patterns.

PBX line

The private branch exchange (PBX) line provides capabilities for a loop start and a ground start.

Custom calling services

The following custom calling services are available:

- speed calling
- call waiting
- three-way calling
- call forwarding

Custom local area signaling services (CLASS) features

The system supports the following CLASS features:

- calling number delivery (CND)
- automatic call back (ACB)
- automatic recall (AR)
- customer originated trace (COT)
- calling number delivery blocking (CNDB)

Ringing

The system supports the following types of ringing:

- bridged ringing
  - — single-party
- superimposed ringing
  - — multiparty
    - – four-party fully selective
    - – eight-party semiselective
- coded
- frequency selective ringing (FSR)

The SMS supports ringing on subscriber lines that you connect to an RCS. The SMS sends different A-bit and B-bit signaling patterns on DS-1 lines that connect to an RCS. The SMS transmission causes the RCS to ring subscriber telephone sets.

The DMS-100 switch uses specified signaling patterns for coin, special service, and single and multiparty lines. The Bell Communications Research document, *Digital Interface Between the SLC96 Digital Loop Carrier System and a Local Digital Switch*, TR-TSY-000008, describes the signaling patterns.

The SMS-RCS subsystem supports all available types of ringing. These ringing types include coded, FSR, and superimposed. A single RCS uses one type of ringing at a time.

Frequency selective ringing

The SMS-RCS subsystem supports FSR for single-party, two-party, four-party, and Meridian Digital Centrex (MDC) lines. This document refers to FSR channel units or cards as FSR cards. The FSR channel cards are of two types in the SMS-RCS subsystem. The types are SCD222 for 900-Ω loops and SCD252 for 1500-Ω loops.

An RCS supports one type of ringing. A field in table RCSINV indicates the type of ringing an RCS uses. For example, an RCS supports FSR but not coded, or coded but not FSR. Refer to the data schema section of the *Translations Guide* for more information on Table RCSINV datafill.

All line cards on an RCS use the type of ringing the RCS employs. If the RCS uses FSR, single-party and coin line cards can also be provisioned on the RCS with FSR cards. The single-party and coin cards employ -R ringing.

Three common FSR systems are available: decimonic, harmonic, and synchromonic. Refer to the *Translations Guide* for additional information about FSR.

Dialing

The system supports two types of dialing: dial pulse and Digitone.

Tones

The system supports the following tones:

- dial tone
- audible ringback
- reorder
- busy

Meridian Digital Centrex (MDC) on SMS

The SMS-RCS subsystem supports Integrated Business Network (IBN) features. The SMS does not support trunks. The IBN features that require trunks must terminate on equipment other than an SMS. The station features apply to 500/2500 sets and attendant consoles. The SMS also does not support Meridian business sets (MBS) or data units.

DDL messaging

The 8085 microprocessor of the A/B DDL message card also sends DDL messages to the time switch in the DS-1 PCM data stream. The microprocessor removes the DDL message from incoming PCM. Software in the SP (the DDL facility) processes DDL messages.

The DDL message contains 24 consecutive bits. The bits appear as groups in the DDL message table.

Table 3-1 DDL message bits and field names

DDL bits	Field name	Explanation
Bits 1 -11	Concentrator field (C-field)	Shelf groups AB and CD use the C-field only when the groups operate in Mode II. This field carries information for shelves A, B, C, and D. The information includes the following: • control of subscriber assignment and deassignment to DS-1 channels. • hook transitions. • activation of the PCM looping test. Refer to Note 1.
Bits 12-14	Spoiler bits (fixed pattern of 010)	Spoiler bits are inserted at known positions in the DDL. The insertions make sure that the DDL does not duplicate a signaling pattern.
Bits 15-17	Maintenance field (M-field)	The M-field on the A-link carries information for all shelves. The M-field controls card and customer loop tests. Refer to Note 2.
Bits 18-19	Alarm data link field (A-field)	The A-field on the A-link carries alarm and system control information for all shelves. Refer to Note 2.
Bits 20-23	Protection line switch field (S-field)	The S-field on the A-link controls the switching of the DS-1 protection link. Refer to Note 2.
Bit 24	Spoiler bit field (fixed pattern of 1)	The spoiler bit is inserted at the known position in the DDL. The insertion makes sure the DDL does not duplicate a signaling pattern.

Note 1: The 8085 microprocessor sends an idle pattern on the DDL link when a C-field is not available to send. The RCS also sends an idle pattern when a new C-field is not present.

Note 2: If the M-, A-, or S-fields do not change between messages, the 8085 microprocessor sends the earlier field patterns. The RCS at the other end sends the same patterns. The 8085 microprocessor sends information to the SP only when a DDL field changes. The 8085 microprocessor and RCS do not transmit Idle patterns.

Nailed-up cross-connections

Nailed-up connections support the following special services features:

- maintenance and table control for nailed-up specials on SMS
- SMS special services
- digital dataphone service (DDS) hairpin
- direct inward dial (DID) PBX by hairpin
- integrated local specials

The nailed-up connection provides support for applications like foreign exchange and off-premises extension. One endpoint of the nailed-up connection must terminate on a switch that supports these special services.

Table control for nailed-up specials on SMS

This feature starts CC code to support nailed-up peripheral-side to peripheral-side (P-side to P-side) cross-connections on any DS-1 links on the same SMS.

Special services feature

The special services feature starts peripheral processor code to support nailed-up P-side to P-side cross-connections on DS-1 links on the same RCS.

This feature provides and maintains connections between pairs of P-side channels, lines, or a group of lines and channels on an SMS. The special services feature provides and maintains these connections in response to a CC request. These connections remain until the CC sends a message to disconnect the connections.

Connections for special services are as follows:

- line to line
- DS-0 to DS-0
- line to DS-0 or DS-0 to line

Digital dataphone service (DDS) hairpin feature

The DDS hairpin feature supports 2.4, 4.8, and 9.6 Kb/s data cards. These cards transfer data over DS-1 links. The cards use a nailed-up cross-connection that the DMS switch arranges. A standard data path appears in the following Dataport cross-connection figure.

The 2.4, 4.8, and 9.6 data cards are for data transmission only. In the example of an NT channel bank the data cards work with an associated card. For example, the D4DP20 card works with the QPP550 card.

Note: The DDS hairpin feature does not support the 56 Kb/s DDS card (D4DP70).

The dataport cross-connection figure is an example of one possible data connection arrangement. The information flows from the data card through the RCS and SMS to a channel bank or another digital facility. The channel bank that appears in the figure is a Northern Telecom (NT) channel bank. Data flows from the channel bank to the DMS-100. The data switches to the terminating party. The party can be a computer, another digital switch, or another device.

Figure 3-4 Dataport cross-connection on an SMS-RCS subsystem

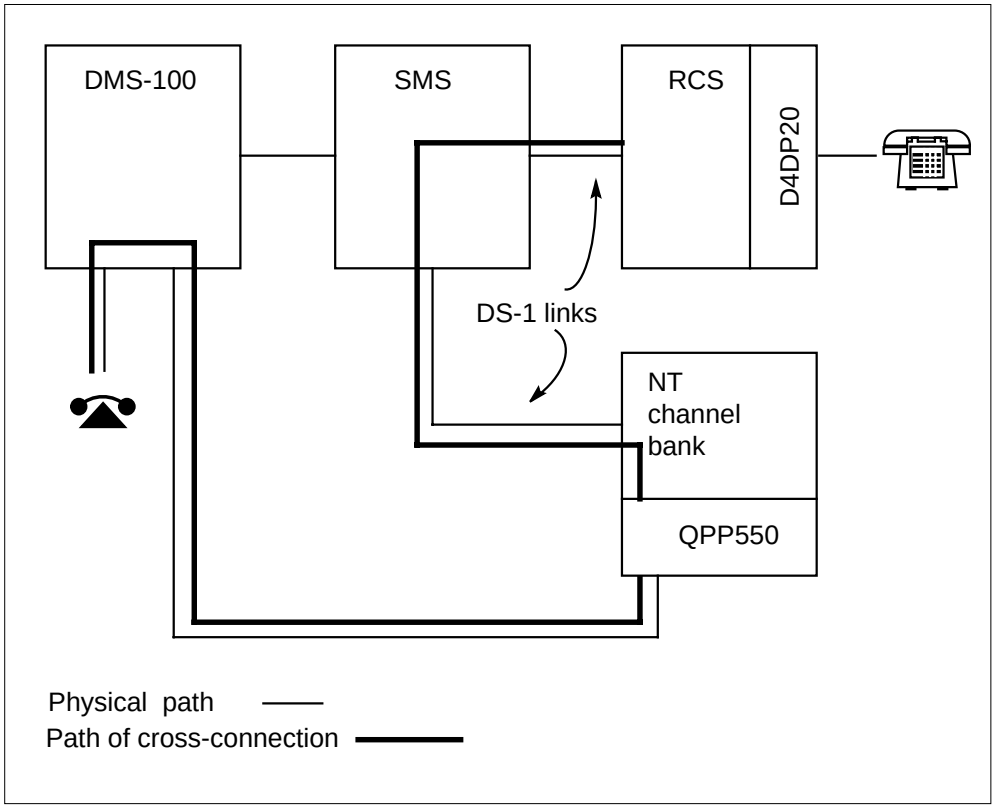

A difference is present between DDS hairpin connections and other special-service connections. The difference is that A-bits and B-bits are not inserted in the information path for the DDS hairpin connection. The DDS protocol uses the same bits as the A- and B- signaling bits. The DDS protocol bit occupies position one in a byte.

Direct inward dial (DID) PBX by hairpin

This feature uses the following:

- special-services channel units in an RCS
- a hairpin connection
- a DS-link from an SMS to a DTC or other piece of telephone equipment

This feature appears in the following DID PBX configuration figure.

Figure 3-5 DID PBX configuration example

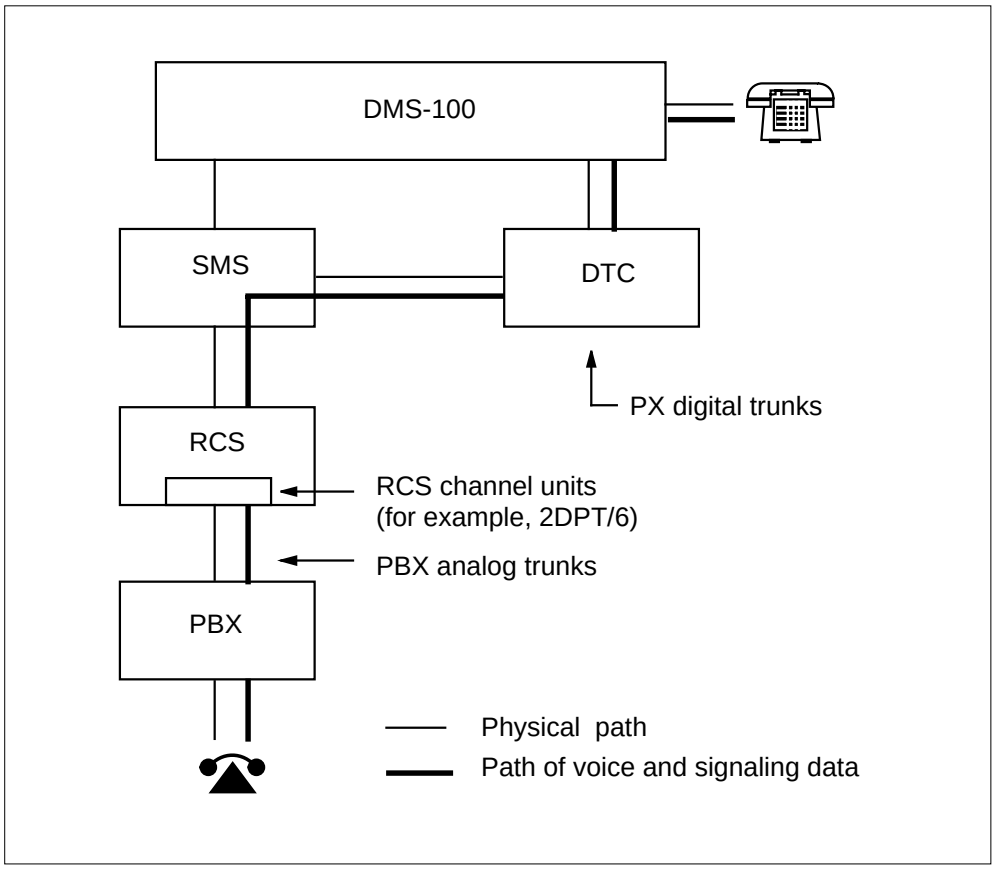

Integrated local specials

The special plain ordinary telephone service (SPOTS) channel unit (S9CD271A) supports POTS. The SPOT also supports the following special services:

- INWATS
- OUTWATS

- TWX
- PBX

The SPOTS channel unit configuration is in loop or ground start mode. When the SPOTS channel unit is in loop start, the the channel units do not support PBX. The units do not support PBX because PBX lines require ground-start signaling and ground-start mode.

Ground-start lines differ from loop-start lines. The treatment of loop-start (tip and ring) to signal an off-hook is different. Ground-start off-hooks are acknowledged. Loop start off-hooks are not acknowledged.

The SPOTS channel unit has the following characteristics:

- two voice-frequency, two-wire channels each channel unit
- accessible for mechanized loop tests
- no gain or frequency setting
- special service unit (SSU) configuration must occur in the associated RCS
- single-party 20 Hz ringing (-R ringing)

Refer to manufacturer documentation for additional information.

The following limits apply to the use of the SPOTS channel unit in the SMS-RCS subsystem:

- A channel is assigned for loop-start and ground-start configurations. A minimum of one DS-0 channel must be free for nondedicated channel units if the units are on the RCS.

  Note: Mode I does not have this limit because four DS-1 links connect an RCS to an SMS. A DS-0 channel is present for every circuit.

- The use of a SPOTS card in Mode III is not recommended. A Mode III RCS multiplexes 48 circuits on two DS-1 links. Channel units on a Mode III RCS must have a single circuit. The SPOTS channel unit contains loop and ground circuits. The circuit not in use cannot be disabled.

  Note: Though the S9CD271A SPOTS channel unit is not recommended for a Mode III RCS, you can use the unit. Only even-numbered circuits can be assigned in Mode III.

- The SPOTS channel unit does not provide for tip-ring reversal. The reversal is a signal that many switches use to indicate a toll call to the originating party. The SPOTS channel unit can be restricted to nontoll calls. This event occurs when the unit connects to a PBX or other piece of equipment that requires tip-ring reversal.

The SPOTS channel unit tests occur through the same method as a single-party line. The system supports the following tests on the SPOTS channel unit:

- off-hook detection
- on-hook detection
- echo return loss
- single party ringing
- carrier channel loss
- idle channel noise

Preparing to datafill SMS

PCL—New software delivery vehicle

After BCS 36, NT delivers Product Computing-Module Loads (PCL) instead of BCS releases or Universal Software Loads (USL).

A PCL contains features from the development stream software product for a specified application in a specified market. The PCL contains the abilities earlier divided between many related NTX packages. An eight-digit ordering code replaces the NTX package codes.

In the following table are the ordering codes and Functional Group names. The SMS requires these ordering codes and Functional Group names. The table lists the old NTX packages that the Functional Group includes. These abilities are associated with the SMS.

Table 3-2 SMS ordering codes

Ordering code	Functional group name	Earlier NTX package codes
BAS00003	BAS Generic	NTX269AA—Universal Tone Receiver (Domestic)
BAS00016	BAS SCM/SMS /SMU	NTX398AA—Subscriber Carrier Module-100s: Interface to the SLC-96 Remote Terminal
		NTX299AB—SMS Special Services
MDC00001	MDC - MDC Minimum	NTX100AA—Meridian Digital Centrex - Basic
RES00001	RES Access Management	NTXE38AB—CLASS: Calling Number Delivery on SMS

Tasks associated with the SMS-RCS system

This section describes the tasks for the entry of data in the SMS. The uses of the DMS-100 switch table editor (TE) allows these tasks. The SMS tables fall in several categories. The SMS tables are in the following datafill summary:

- test trunks, test lines, and service circuits in table CLLI
- SMS and RCS entry in tables SITE, LTCINV, LTCPSINV, RCSINV, and LNINV
- nailed-up cross-connections for specified services in table PSNAILUP
- call processing translations in the lines, trunks, screening, and routing tables: TRKGRP, TRKSGRP, TRKMEM, LINEATTR, HUNTGRP, LENLINES, LENFEAT, HUNTMEM, DNROUTE, and HNPACONT
- system alarms in tables ALMSCGRP, ALMSDGRP, ALMSD, and ALMSC
- scan and signal distribution points in tables SCGRP and SDGRP
- metallic test access assignments in tables MTAMDRVE, MTAVERT, and MTAHORIZ

Protection lines

Protection switching is a DMS-100 Family switch auxiliary feature. Protection switching makes sure communication between an SMS and an RCS continues if a DS-1 line that connects the two fails. Each RCS contains one to four primary lines. The number of lines depends on the modes of the RCS shelf groups. Each RCS has a maximum of one protection line.

Special services nailed-up cross connections

Special services include telecommunications services other than POTS, coin, and common business services. Special-service cards in the RCS support the services. These services are nonsupervised (locally switched) special services.

Arrangement and maintenance of a nailed-up cross-connection occurs through software table PSNAILUP. The connection supports applications that require special-service cards. The nailed-up cross-connection is a hairpin connection. This connection is a peripheral-side cross-connection. Information flows from an RCS to the SMS. The DMS-100 Family switch system supports single, two-way cross connections.

Controlling RCS modes

Arrangement and maintenance of the mode of operation of each shelf group in the RCS occurs through software table RCSINV. The MODE field, a subfield of fields ABINFO and CDINFO, is entered as MODE1, MODE2, or MODE3. The RCS supports a mixed mode of operation. Each shelf group can operate separately in one of three modes.

Static datalog tracking

Logs track changes in tables RCSINV, LTCINV, and LTCPSINV. These logs are TUPC100, TUPC101, TUPC102, and TUPC103. The logs are a start point to recreate, debug and solve field problems.

Static datalog tracking is good because the indications of service degradation are not always enough to diagnose the problem in the field.

When to update static data

Static data for an RCS starts two static data tables for the SMS: SMX_RT and REMOTE_PARM.

Operating company personnel cannot manipulate table SMX_RT. Table SMX_RT contains configuration information about RCS terminals and includes the following data.

- alarm control unit type
- status of pulse code modulation looping test in Mode II (enabled, disabled, or not applicable)
- node number
- SMS P-side port where protection line attaches
- shelf group modes of operation
- SMS P-side port numbers where DS-1 lines that connect an SMS and an RCS attach

Table REMOTE_PARM contains line circuit information. This information includes card codes. Table LNINV contains this information for line cards.

Basic call processing

Functional group

Functional group: BAS00016

Feature package

Feature package: NTX398AA, SCM SLC-96

Release applicability

XPM05 and up

Prerequisites

To operate, Basic call processing the following prerequisites are required:

- Bilge, NTX000AA
- Common Basic, NTX001AA
- New Peripheral Maintenance, NTX270AA
- Local Features I, NTX901AA

Description

The NTX398AA Subscriber Carrier Module-100S: Interface to the SLC-96 Remote Terminal feature package enables the Subscriber Carrier Module-100S (SMS) to provide basic call processing for the subscriber lines connected to its remotes.

Datafilling basic call processing

The table “Datafill Tables Required for NTX398AA" lists the data tables in the order they must be datafilled for feature package NTX398AA, the NTP number associated with each table, the associated section numbers, and the required forms.

The datafill order begins with the first table listed, CLLI, and proceeds through the last table listed, MTAHORIZ.

This chapter contains examples of tables that have been datafilled and that correspond to the hardware configuration shown in the following figure.

Basic call processing (continued)

Example configuration for datafill

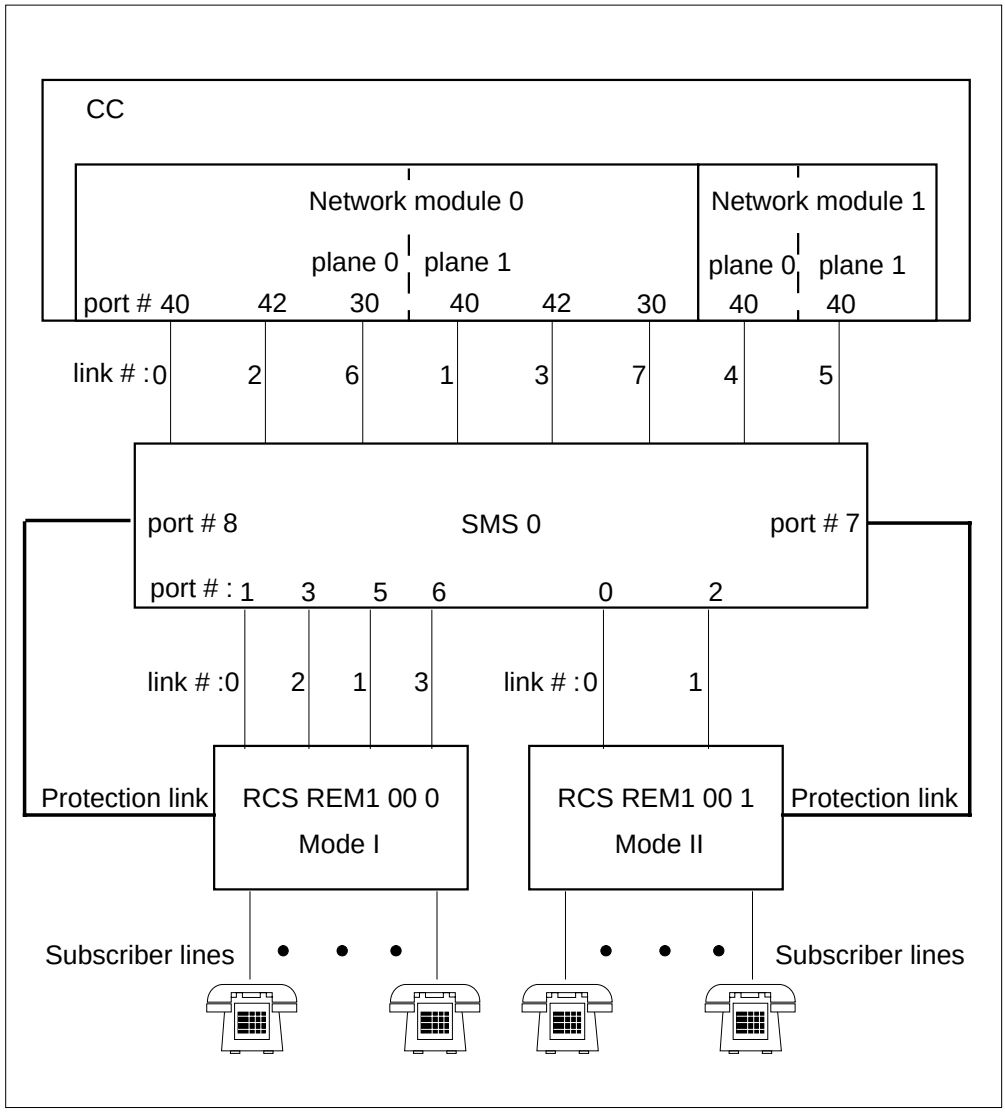

Operation

The Subscriber Carrier Module-100S: Interface to the SLC-96 remote terminal package is a peripheral module based on line group controller (LGC) and digital trunk controller (DTC) architecture.

The SMS provides a digital interface between a DMS-100 or DMS-100/200 digital switch and the remote terminal of the SLC-96 digital loop carrier system. The SMS replaces the SLC-96 central office terminal, eliminating the individual cards the central office terminal provides for each subscriber line.

DMS recognition of the switching unit and all remote locations

Table SITE contains data that allows the DMS system to recognize the equipment for the switching unit and for all remote locations that home on to it. This table defines the site names for the remote location. Table SITE uses codes entered in table CLLI for switching unit trunk groups and the remote location. Table CLLI uniquely identifies the far end of each announcement, tone, trunk group, test trunk, national milliwatt test lines, and service circuit.

Feature AF5678, XPM Node Table Sync Redesign, consolidates critical XPM node information in one table, PMNODES. To ensure XPM units maintain synchronization of internal node and port tables, the CM maintains a copy for each XPM unit. The XPM units do not have to derive any data for the internal node or port tables. The active XPM unit no longer updates the inactive unit tables which caused possible differences in the datafill of the tables. The CM downloads the same information to both XPM units during updates.

DANGER

An attempt to add or change tuples in any inventory table may be rejected by the system if table space or node resources are not available.

Attempted changes in the inventory tables with Table Editor may be rejected. The system displays an explanation and possible corrective actions. Usually BSYing and RTSing an XPM defragments the node tables, thus freeing required space. If XPM resources are not available, the following message is displayed.

The new node cannot be supported on <*XPMNAME*>.

ACTION: None, resources have been exceeded on this XPM.

Note: Table PMNODES must be shown as datafilled before any inventory tables in the datafill sequence list..

Translations table flow

The Basic call processing does not affect translations table flow.

Limitations and restrictions

Basic call processing has no limitations or restrictions.

Basic call processing (continued)

Interactions

Basic call processing has no functionality interactions.

Activation/deactivation by the end user

Basic call processing requires no activation or deactivation by the end user.

Billing

Basic call processing does not affect billing.

Station Message Detail Recording

Basic call processing does not affect Station Message Detail Recording.

Datafilling office parameters

Basic call processing does not affect office parameters.

Datafill sequence

The following table lists the tables that require datafill to implement Basic call processing. The tables are listed in the order they are to be datafilled.

Datafill tables required for Basic call processing (Sheet 1 of 4)

Table	Purpose of table
CLLI	Common language location identifier. Identifies the maintenance and test trunks used in the SMS-RCS system.
SITE	Site table. Allows the DMS switch to recognize the remote equipment tied to the host.
CARRMTC	Carrier maintenance control. Allows the DMS switch administration to datafill maintenance control information in peripherals, out-of-service limits, for alarms, and system return-to-service occurrences.
PMLOADS	Peripheral module loads. Stores a load map between the load names and devices on which the loads reside. This permits auto load to locate load files without the intervention of operating company personnel.
PMNODES	Peripheral module node information. Read-only table automatically datafilled as tuples are datafilled in the inventory tables. Information from table PMLOADS is downloaded to all XPM units subtending the CM.
LTCINV	Line trunk controller inventory. Inventories various peripheral module types including the SMS, excluding P-side link assignments.
Note: When an inhibit lead is used, tables SCGRP and SDGRP must be datafilled before table RCSINV.	

Basic call processing (continued)

Datafill tables required for Basic call processing (Sheet 2 of 4)

Table	Purpose of table
LTCPSINV	Line trunk controller P-Side Link Inventory. Identifies the SMS module type and number and the port designation of the P-side links.
RCSINV (See Note)	Remote concentrator subscriber inventory. Identifies the physical location of the RCS, C-side links, SMS to which the links connect, mode of operation of the RCS shelf groups, protection switching details, and related information.
TMINV	Trunk module inventory. Identifies the trunk modules that contain test circuits that terminate test pairs connected to RCS lines.
TRKGRP	Trunk group. Identifies the test circuits associated with the maintenance and test trunks.
TRKSGRP	Trunk subgroup. Lists the supplementary information for each subgroup that is assigned to one of the trunk groups listed in table TRKGRP.
TRKMEM	Trunk member. Identifies the circuits associated with the test equipment used to test lines and trunks.
ALMSCGRP	Alarm scan group. Records the circuit equipment, location, and type of card. It also serves as a head table for the respective scan points.
ALMSDGRP	Alarm signal distributor group. Records the circuit equipment, location, and type of card. It also serves as a head table for the respective signal distribution points.
ALMSD	Alarm signal distributor point. Identifies the function to be performed by each of the assigned signal distribution points in the alarm signal distribution groups.
ALMSC	Alarm scan. Identifies the functions to be performed by each of the assigned scan points in the alarm scan groups.
SCGRP (See Note)	Scan group. Lists the product engineering code (PEC) and the physical location at the host or remote switching units for the scan groups that are reserved for use as scan points for line features.
SDGRP (See Note)	Signal distributor group. Lists the PEC and the physical location at the host or remote switching units for the signal distribution groups reserved for use as signal distribution points for line features.
LINEATTR	Line attribute. Assigns line attributes to regular lines in table LENLINES, Meridian stations, and attendant consoles in the MDC translations tables.
Note: When an inhibit lead is used, tables SCGRP and SDGRP must be datafilled before table RCSINV.	

Basic call processing (continued)

Datafill tables required for Basic call processing (Sheet 3 of 4)

Table	Purpose of table
LNINV	Line circuit inventory. Retains an inventory of subscriber lines and associated line cards for RCS modules. Lines in this table may be datafilled through SERVORD. Refer to SERVORD for more information on this function.
PSNAILUP	P-Side nail-up. Retains an inventory of P-side to P-side nailed-up cross-connections whose endpoints are either lines on an RCS or channels on a DS-1 line connecting to other digital equipment.
HUNTGRP	Hunt group. Stores the data for the hunt groups assigned in the switching unit.
LENLINES	Line assignment. Lists the following data for each line: • site name, if the line is remote • line equipment number (LEN) • the party to which the directory number is assigned • the ringing code assigned to the directory lines • directory number • signal type • index into table LINEATTR • list of options
LENFEAT	Line feature. Lists the features assigned to a specific line in table LENLINES.
HUNTMEM	Hunt group member. Lists the members assigned to the hunt groups listed in table HUNTGRP.
DNROUTE	Directory number. Stores the directory numbers that are not associated with a LEN, and their existence as the result of operating company input.
HNPACONT	Home NPA code subtables. Lists the home numbering plan area (HNPA) subtables.
MTAMDRVE	Metallic test access minibar driver. Specifies the physical location and the type of minibar driver assigned to the minibar switch.
Note: When an inhibit lead is used, tables SCGRP and SDGRP must be datafilled before table RCSINV.	

Datafill tables required for Basic call processing (Sheet 4 of 4)

Table	Purpose of table
MTAVERT	Metallic access test vertical connection. Identifies the vertical connectivity to the metallic test access (MTA) matrix.
MTAHORIZ	Metallic access test horizontal connection. Lists the assignment to a horizontal and horizontal group of metallic test access minibars (MTAM).
Note: When an inhibit lead is used, tables SCGRP and SDGRP must be datafilled before table RCSINV.	

Datafilling table CLLI

The commom language location identifier (CLLI) codes are used to uniquely identify the far end of each announcement, tone, trunk group, test trunk, national milliwatt test lines, and service circuit. This table identifies the maintenance and test trunks used.

The following table shows the datafill specific to Basic call processing for table CLLI. Only those fields that apply directly to Basic call processing are shown. For a description of the other fields, refer to the data schema section of the *Translations Guide*.

Datafilling table CLLI (Sheet 1 of 2)

Field	Subfield or refinement	Entry	Explanation and action
CLLI		see subfields	Common language location identifier. This 16-character field uniquely identifies the far end of each announcement, tone, trunk group, test trunk, national milliwatt test lines, and service circuit. The recommended subfields are PLACE, PROV, BLDG, TRAFUNIT, and SUFX.
	PLACE	alphanumeric	Place. This four-character code identifies the name of the city or town at the far end of each group.
Note 1: Memory is allocated by the SIZE field in table DATASIZE for the entry with field DATSKEY equal to CLLI. ***Note 2:*** The maximum number of CLLI codes is 8192.			

Basic call processing (continued)

Datafilling table CLLI (Sheet 2 of 2)

Field	Subfield or refinement	Entry	Explanation and action
	PROV	alphanumeric	Province or state. This two-character code identifies the province or state at the far end of the trunk group.
	BLDG	alphanumeric	Building. This two-character code identifies the building number at the far end of the trunk group.
	TRAFUNIT	alphanumeric	Traffic unit. This three-character code identifies the destination of the traffic unit at the far end of the trunk group.
	SUFX	alphanumeric	Suffix. This one-character code uniquely identifies trunk groups that terminate at the same CLLI location.
ADNUM		0 to size of CLLI table minus 1	Administrative trunk group number. This value is a unique number from 0 to a number one less than the table CLLI size shown in table DATASIZE.
TRKGRSIZ		0 to 2047	Trunk group size. This four-character field is equal to the maximum quantity of trunk members that are expected to be assigned to the trunk group.
ADMININF		see subfields	Administrative information. This 32-character field is used by the operating company to record administrative information. The information in this field is not used by the switching unit. The recommended subfields are TRAFCLS, OFFCLS, and TRKGRTYP.

Note 1: Memory is allocated by the SIZE field in table DATASIZE for the entry with field DATSKEY equal to CLLI.

Note 2: The maximum number of CLLI codes is 8192.

Datafill example for table CLLI

The following example shows sample datafill for table CLLI.

MAP display example for table CLLI

```
CLLI     ADNUM   TRKGRSIZ            ADMININF
_____________________________________________________
MTADRIVER   250     32      METALLIC_TEST_DRIVER
MONTALK     254     32      VERIFICATION
MJACK       257     256     METALLIC_JACK
LTU         259     32      LINE_TEST_UNIT
```

Datafilling table SITE

Table SITE contains data for the switching unit and for all remote locations that home on to it. Before a line equipment number (LEN) can be assigned and before a peripheral module (PM) can be datafilled, table SITE must be datafilled to enable the DMS-100 switch to recognize the equipment.

The first entry in table SITE must be HOST for the host switching unit. The site names for the remote locations are defined by the operating company.

The following table shows the datafill specific to Basic call processing for table SITE. Only those fields that apply directly to Basic call processing are shown. For a description of the other fields, refer to the data schema section of the *Translations Guide*.

Datafilling table SITE (Sheet 1 of 2)

Field	Subfield or refinement	Entry	Explanation and action
NAME		alphanumeric	Site name. Enter the site name assigned to the remote switching unit. The first character must be alphabetic. Site names may be up to four characters in length. PM type names cannot be used for site names. Note the first entry in this field is for the host switching unit.
LTDSN		00 to 99	LEN test desk site number. Enter a unique two-digit number required to dial the site that appears under field NAME.

Note 1: Memory is automatically allocated for a maximum of 32 sites.

Note 2: Enter the continuation mark (+) in fields with multiple possible entries when more data is specified on the next line or more records will be entered. Enter the end mark ($) in fields with multiple possible entries after the last entry.

Basic call processing (continued)

Datafilling table SITE (Sheet 2 of 2)

Field	Subfield or refinement	Entry	Explanation and action
MODCOUNT		0 to 1000	Module count.
OPVRCLLI		alphanumeric	Operator verification CLLI. Enter the CLLI assigned to the operator verification trunk group at the remote location.
ALMDATA		see subfields	Alarm data. This field is for remote locations only and consists of subfields ALMTYPE, TMTYPE, TMNO, CKTNO, and POINT. See Note 2 for information about terminating data entry.
	ALMTYPE	CR, MJ, or MN	Enter the alarm type: critical (CR), major (MJ), or minor (MN).
	TMTYPE	RSM	Enter the trunk module type, remote service module, where the miscellaneous signal distribution point assigned to the alarm is located.
	TMNO	0 to 2047	Enter the number assigned to the remote service module where the miscellaneous signal distribution point assigned to the alarm is located.
	TMCKTNO	0 to 29 or blank	Enter the trunk module circuit on the remote service module where the miscellaneous signal distribution point assigned to the alarm is located.
	POINT	0 to 7 or blank	Enter the signal distribution point number in the trunk module circuit number that is assigned to the alarm.

Note 1: Memory is automatically allocated for a maximum of 32 sites.

Note 2: Enter the continuation mark (+) in fields with multiple possible entries when more data is specified on the next line or more records will be entered. Enter the end mark ($) in fields with multiple possible entries after the last entry.

Datafill example for table SITE

The following example shows sample datafill for table SITE.

MAP display example for table SITE

```
NAME LTDSN  MODCOUNT OPVRCLLI   ALMDATA
_____________________________________________
REM1   01       0    REM19     CR RSM 0  4  0  $
```

Datafilling table CARRMTC

Table CARRMTC allows the DMS-100 switch administration to datafill maintenance control information in peripherals, out-of-service limits for alarms, and system return-to-service occurrences.

A carrier, by definition, maintains communication on links connecting DMS-100 switch peripherals to channel banks, DMS-100 switch peripherals to remote DMS-100 switch peripherals, or remote DMS-100 switch peripherals to remote DMS-100 switch peripherals.

From 16 to 20 entries exist for each type of peripheral that can provide carrier links in the switch. The choice of entries for each carrier is datafilled in table LTCPSINV.

The following checks are made between table CARRMTC and table LTCPSINV:

- When a carrier index (CARRIDX) is datafilled in table LTCPSINV, an entry for the peripheral module type, in this case SMS, must already be present in table CARRMTC.
- When an entry is deleted from table CARRMTC, the entry cannot be referenced by any carriers in table LTCPSINV. Otherwise, the deletion command is rejected.
- When an existing entry in table CARRMTC is changed, table LTCPSINV is checked to determine if the entry is referenced by in-service carriers. If so, the change command is rejected and a list of the in-service carriers is displayed.

The following table shows the datafill specific to Basic call processing for table CARRMTC. Only those fields that apply directly to Basic call processing are

Basic call processing (continued)

shown. For a description of the other fields, refer to the Data schema section of the *Translations Guide*.

Datafilling table CARRMTC (Sheet 1 of 5)

Field	Subfield or refinement	Entry	Explanation and action
CSPMTYPE		SMS	C-side node PM type. Enter the peripheral module type of the node on the C-side of the carrier link.
TMPLTNM		DEFAULT	Template name. Enter the template name (up to 16 characters) for the peripheral module. This entry also appears in the CARRIDX field of table LTCPSINV. The default value is DEFAULT. Examples for entry in this field include PRIMARY or PROTECTION.
RTSML		0 to 255	Return to service maintenance limit. Enter the number of times in the audit interval a carrier can be returned to service by the system before a warning is issued. Value 255 disables this feature.
RTSOL		0 to 255	Return to service out-of-service limit. Enter the number of times in the audit interval a carrier may be returned to service by the system before it is placed permanently out of service. Value 255 disables this feature.
ATTR		see subfield	Attribute. This field is comprised of subfield SELECTOR.
	SELECTOR	DS1	Selector. Enter carrier type.

Note 1: The DMS-100 switch adds the first tuple for SMS to table CARRMTC automatically during initial program load (IPL) or first restart after IPL. The entry is designated as index 0 and has the value DEFAULT in the TMPLTNM field and default values for the other fields. This tuple cannot be deleted. Only fields ES, SES, and thresholds for frame and slip losses can be changed.

Note 2: Tuples other than the default tuple must be added manually before they can be referenced in table LTCPSINV. These tuples can be deleted only if no DS-1 carriers are associated with them.

Note 3: Tuples can be changed in table CARRMTC only if the associated DS-1 carriers are ManB or OFFL.

Note 4: Enter the continuation mark (+) in fields with multiple possible entries when more data is specified on the next line or more records will be entered. Enter the end mark ($) in fields with multiple possible entries after the last entry.

Datafilling table CARRMTC (Sheet 2 of 5)

Field	Subfield or refinement	Entry	Explanation and action
CARD		NT6X85AA or NT6X85AB	Card. Enter the PEC of the DS-1 interface card used. The range of values for the SMS is NT6X85AA or NT6X85AB.
VOICELAW		MU_LAW	Voice law. Enter the voice law used in the carrier. A_LAW is used mainly in international switches. MU_LAW is used mainly in North American switches.
FF		SF	Frame format. Enter SF (standard frame or super frame) in this field. The SMS-RCS subsystem uses the 12-frame format, 125 microseconds per frame.
ZLG		ZCS	Zero logic. Enter ZCS (zero code suppression). If all zeros are transmitted, a one is inserted in the second least significant bit position.
BERB		BPV	Bit error rate base. Enter BPV for bipolar violation.
DLK		NILDL	Data link. Currently, only NILDL is supported.

Note 1: The DMS-100 switch adds the first tuple for SMS to table CARRMTC automatically during initial program load (IPL) or first restart after IPL. The entry is designated as index 0 and has the value DEFAULT in the TMPLTNM field and default values for the other fields. This tuple cannot be deleted. Only fields ES, SES, and thresholds for frame and slip losses can be changed.

Note 2: Tuples other than the default tuple must be added manually before they can be referenced in table LTCPSINV. These tuples can be deleted only if no DS-1 carriers are associated with them.

Note 3: Tuples can be changed in table CARRMTC only if the associated DS-1 carriers are ManB or OFFL.

Note 4: Enter the continuation mark (+) in fields with multiple possible entries when more data is specified on the next line or more records will be entered. Enter the end mark ($) in fields with multiple possible entries after the last entry.

Basic call processing (continued)

Datafilling table CARRMTC (Sheet 3 of 5)

Field	Subfield or refinement	Entry	Explanation and action
IAT		Y	Inhibit alarm transmit. Enter Y for the IAT field to inhibit yellow alarms. RCS modules in any mode do not support yellow-alarm reception, which the SMS, upon detecting frame loss, transmits to the RCS. Consequently, this field must be datafilled to disable the sending of yellow alarms. Failure to set the IAT field correctly can result in subscribers hearing a loud noise if the SMS detects a DS-1 fault.
LCGAST		40 to 250	Local carrier group alarm set threshold. Enter a value for the threshold in units of 10 ms. Primary links on an SMS have a range of 40-250 ms. If protection links are present, enter 80. If protection links are absent, enter 250. The range for protection links is 100-250 ms, with 250 being the recommended value.
LCGACL		100 to 1000	Local carrier group alarm clear threshold. Enter a value for the threshold in units of 10 msecs. Primary links on an SMS have a range of 100-1000 ms. If protection links are present, enter 200. If protection links are absent, enter 1000. The range for protection links is 200-400 ms, with 300 being the recommended value.

Note 1: The DMS-100 switch adds the first tuple for SMS to table CARRMTC automatically during initial program load (IPL) or first restart after IPL. The entry is designated as index 0 and has the value DEFAULT in the TMPLTNM field and default values for the other fields. This tuple cannot be deleted. Only fields ES, SES, and thresholds for frame and slip losses can be changed.

Note 2: Tuples other than the default tuple must be added manually before they can be referenced in table LTCPSINV. These tuples can be deleted only if no DS-1 carriers are associated with them.

Note 3: Tuples can be changed in table CARRMTC only if the associated DS-1 carriers are ManB or OFFL.

Note 4: Enter the continuation mark (+) in fields with multiple possible entries when more data is specified on the next line or more records will be entered. Enter the end mark ($) in fields with multiple possible entries after the last entry.

Datafilling table CARRMTC (Sheet 4 of 5)

Field	Subfield or refinement	Entry	Explanation and action
RCGAST		1 to 9999	Remote carrier group alarm set threshold. Enter value for the threshold in units of 10 ms.
RCGACL		1 to 9999	Remote carrier group alarm clear threshold. Enter a value for the threshold in units of 10 ms.
AISST		1 to 9999	Alarm indication signal set threshold. Enter a value for the threshold in units of 10 ms. The SMS and RCS are connected by DS-1 links. Alarm indication signals (AIS) have no application in such a simple network. Therefore, use the default value for this field.
AISCL		1 to 9999	Alarm indication signal clear threshold. Enter the value for the threshold in units of 10 ms. The SMS and RCS are connected by DS-1 lines. AIS have no application in such a simple network. Use the default value for this field.
BEROL		3 to 6	Bit error rate out-of-service limit. Enter the bit error rate out-of-service limit expressed as the negative of the exponent of 10 (10E-n). Three, for example, represents a bit error rate of 1 in 1000.
BERML		4 to 7	Bit error rate maintenance limit. Enter the bit error rate maintenance limit expressed as the negative of the exponent of 10 (10E-n).

Note 1: The DMS-100 switch adds the first tuple for SMS to table CARRMTC automatically during initial program load (IPL) or first restart after IPL. The entry is designated as index 0 and has the value DEFAULT in the TMPLTNM field and default values for the other fields. This tuple cannot be deleted. Only fields ES, SES, and thresholds for frame and slip losses can be changed.

Note 2: Tuples other than the default tuple must be added manually before they can be referenced in table LTCPSINV. These tuples can be deleted only if no DS-1 carriers are associated with them.

Note 3: Tuples can be changed in table CARRMTC only if the associated DS-1 carriers are ManB or OFFL.

Note 4: Enter the continuation mark (+) in fields with multiple possible entries when more data is specified on the next line or more records will be entered. Enter the end mark ($) in fields with multiple possible entries after the last entry.

Basic call processing (continued)

Datafilling table CARRMTC (Sheet 5 of 5)

Field	Subfield or refinement	Entry	Explanation and action
ES		0 to 9999	Error second threshold. Enter a value for the threshold in units of 10 ms.
SES		0 to 9999	Severe error second threshold. Enter a value for the threshold in units of 10 ms.
FRAMEML		0 to 9999	Frame maintenance limit. Enter the maintenance limit for frame loss.
FRAMEOL		0 to 9999	Frame loss limit. Enter the out-of-service limit for frame loss. Note that FRAMEOL should be larger than FRAMEML. The range is 0-9999.
SLIPML		0 to 9999	Slip maintenance limit. Enter the maintenance limit for slip. The range is 0-9999.
SLIPOL		0 to 9999	Slip out-of-service limit. Enter the out-of-service limit for slip. Note that SLIPOL should be larger than SLIPML.

Note 1: The DMS-100 switch adds the first tuple for SMS to table CARRMTC automatically during initial program load (IPL) or first restart after IPL. The entry is designated as index 0 and has the value DEFAULT in the TMPLTNM field and default values for the other fields. This tuple cannot be deleted. Only fields ES, SES, and thresholds for frame and slip losses can be changed.

Note 2: Tuples other than the default tuple must be added manually before they can be referenced in table LTCPSINV. These tuples can be deleted only if no DS-1 carriers are associated with them.

Note 3: Tuples can be changed in table CARRMTC only if the associated DS-1 carriers are ManB or OFFL.

Note 4: Enter the continuation mark (+) in fields with multiple possible entries when more data is specified on the next line or more records will be entered. Enter the end mark ($) in fields with multiple possible entries after the last entry.

Datafill example for table CARRMTC

The following example shows sample datafill for table CARRMTC.

MAP display example for table CARRMTC

```
CSPMTYPE TMPLTNM RTSML RTSOL                    ATTR
_____________________________________________________
SMS DEFAULT 255 255 DS1 NT6X85AB MU_LAW SF ZCS BPV NILDL Y
                    100 300 50 50 150 1000 3  6 864 100 17
                       511 4  255
```

Datafilling table PMLOADS

Table PMLOADS (peripheral module loads) stores a mapping between the load names and the devices where the loads reside. This table permits auto load to locate load files without the intervention of operating company personnel.

The following procedure shows the datafill for table PMLOADS. Table PMLOADS is used to store the device location of every PM load file. This permits the DMS-100 switch to locate load files.

Feature AF5004, XPM Loadfile Patching, introduces the concept of an active loadfile and a backup loadfile. The active loadfile is always the default load used with the LOADPM command and most system activities. The backup loadfile is used if there is a problem in loading or returning to service the active loadfile. The backup loadfile is always the unpatched loadfile that Northern Telecom shipped.

The active and backup loadfiles are used by feature AF5004 when applying and removing patches.

Table PMLOADS is modified by feature AF5004 to add fields to store data for the

- name of the active loadfile, which is the default load used with the LOADPM command and most system initiated activities
- name of the backup loadfile, which is the load used if there is a problem in loading or returning to service the active loadfile. The backup loadfile is always the unpatched loadfile shipped with the SMS.
- file locations
- update active loadfile field, which indicates if the site wants the active file ID updated automatically. The feature allows the patched loadfile to be loaded into the XPM should a reload be necessary which simplifies reload and recovery of the XPM. The active file information is updated through loadfile patching, if loadfile patching is enabled.

Basic call processing (continued)

The active and backup files are used by the system as part of loading and recovery.

The XPM load files must be datafilled in table PMLOADS before they can be datafilled in inventory table LTCINV. The inventory table enforces this rule.

Note: An exception to this rule occurs during initial datafill and during dump and restore. During this time, tuples in table PMLOADS are added automatically when LTCINV tuples are added.

Pre-patched XPM loads

Pre-patched XPM loads background

Pre-patched XPM loads (PPXLs) are XPM loadfiles that have corrective patches built into the loadfile. PPXLs are incremental loads that are built using patch updates. The patch updates were originally used to create patch files which have been released to the field. Hence there is no functional or technical difference between a regular XPM load with patches versus a PPXL where the patches have been incorporated into the load. In summary, PPXLs are analogous to CM loads that have patches built in based on date of shipment.

Implementation of PPXLs

At the beginning of each PPXL loadfile there is a 1K data block containing the patch IDs for the patches that have been included within the PPXL. Even though the patches have been built into the PPXL, the corresponding patch files for each patchid listed in the 1K data block must be present when the PPXL is datafilled in table PMLOADS.

When the PPXL is datafilled in table PMLOADS, the loadset is either modified if one already exists for the base load, or the loadset is initially created if the base load is new to the DMS-100 switch.

Note: Loadsets are used to group all peripheral units loaded with the same load together. To view all loadsets on the DMS-100 switch, access the PATCHER CI level and enter the command string INFORM PMALL.

After the PPXL has been added to table PMLOADS, it can be loaded manually, or automatically, by the system recovery controller (SRC). When the PPXL is loaded, by either method, the patching performed after loading the PPXL will be reduced, or eliminated entirely, because most or all of the patches have already been included in the load.

Once the PPXL is loaded, it can have additional patches applied to it or removed from it exactly in the same fashion as a regular XPM load can. Also, any patches that have been built into the PPXL can be removed, as long as their corresponding patch files are present.

Any patches added or removed following loading of a PPXL will be automatically applied or removed upon subsequent reloads of the PPXL.

PPXL Naming Convention

PPXL file names have "_<date>" appended to the end of their corresponding base load name. For example, a PPXL load file created for base load ECL03BX would be named ECL03BX_941129. The base load name, however, always remains the same. Base loads can be identified as any load not having the _<date> suffix.

The inherent value then becomes the preservation of the patch stream with the ability to up-issue a PPXL as required. A PPXL's vintage can always be identified using the date identifier.

PPXL storage requirements

When preparing to load PPXLs, Telcos are advised to double their XPM load storage requirements to accomodate the PPXLs. PPXLs require that the PPXL loadfile be stored on the ACTVOL device and the base load file be stored on the BKPVOL device.

Loading a PPXL

There are two methods of adding PPXLs to an office. The first is for upgrading an office to a new base load lineup, that is, when the base loadname is not currently in table PMLOADS. The second method is for adding PPXLs to offices that already have the base loadname in table PMLOADS, for example, ESC03CJ (the existing loadname) is appended to ESC03CJ_950105 (the PPXL added to the baseload). The two methods follow:

Note 1: PPXLs are only supported on BCS36 or higher CM loads.

Note 2: PATCH JCK19 must be applied to the CM before continuing.

Upgrading the base load

To load a PPXL in an office where the baseload is new to the office, use the following procedure:

1 Copy the base loadfile and the PPXL loadfiles to the disk volumes to be used for PM loads.

> ***Note:*** Both the base load and the PPXL load should be copied to two disk volumes for redundancy.

2 Copy the patches associated with the PPXL loads to the same disk volume used in the step 1. A list of patches associated with each PPXL load is included in the load tape shipment. After the PPXL file is present on disk, obtain a list of patches included in the PPXL by typing

```
>XPMLFP
```

Basic call processing (continued)

and pressing the Enter key.

>PATCHLIST FILE ppxl_filename

and pressing the Enter key.

where

ppxl_filename
is the filename of the PPXL loaded added to the baseload

3 Add a new tuple for the base load to table PMLOADS. Enter the base load for the LOADNAME, the base loadname for the ACTFILE and the base load name again for the BKPFILE.

4 Add the base loadname to the appropriate inventory table, for example LTCINV.

5 Edit the tuple added in step 3 to change the ACTFILE field from the base loadfile name to the PPXL filename. See the datafill example for table PMLOADS to see what this tuple looks like.

6 Set the loadset against both units of the XPM by typing

>PATCHER

and pressing the Enter key.

>SET loadname PM pm_type device_no unit_no

and pressing the Enter key.

where

loadname
is the name of the loadfile

pm_type
is the type of PM requiring the loadset

device_no
is the device number with a range of 0-255

unit_no
is the unit number, 0 or 1

7 Load the PPXL into each unit of the XPM by typing

>BSY UNIT unit_no

and pressing the Enter key.

>LOADPM UNIT unit_no

and pressing the Enter key.

>RTS UNIT unit_no

and pressing the Enter key.

where

unit_no
is the unit number of the XPM to be loaded

8 Perform a SWACT of the XPM and repeat step 7.

Note 1: Once loaded, the XPM may have additional patches applied or removed in the same manner used with XPM loads in the past. Also, any

patches built into the PPXL may be removed from the load as long as the actual patch file is present on disk.

Note 2: Any patches added or removed following loading of a PPXL will be automatically applied or removed upon subsequent reloads of the PPXL.

Note 3: Non-PPXL patches are not removed when the PPXL is reloaded since there is no need to remove them because the removed patches are already out of the loadset.

Adding PPXLs to an existing PM load lineup

To add PPXLs to an existing XPM load lineup, use the following procedure:

1 Verify all patch_ids associated with the PPXL are present on the disk volume identified in table PMLOADS, field ACTVOL. If not present, copy the patches from tape to the correct volume. A list of the patches contained in each PPXL is included with the PM tape shipment. Once the PPXLs are copied to disk, list the patches in the PPXL by typing

```
>XPMLFP
```

and pressing the Enter key.

```
>PATCHLIST FILE ppxl_filename
```

and pressing the Enter key.

where

ppxl_filename
is the filename of the PPXL loaded to disk

2 Copy the PPXL file (filename_date) to the disk volume used in step 1.

3 Copy the baseload to the disk volume identified in table PMLOADS, field BKPVOL.

4 Modify table PMLOADS as follows: If the XPM base loadname does not currently exist in table PMLOADS add a new tuple using the previous “Upgrading baseload lineup" procedure. Otherwise, change the ACTFILE field to the PPXL filename (filename_date). At this point the loadset will be upgraded if one currently exists or one will be created if not.

5 Set the loadset against both units of the XPM by typing

```
>PATCHER
```

and pressing the Enter key.

```
>SET loadname PM pm_type device_no unit_no
```

and pressing the Enter key.

where

loadname
is the name of the loadfile

pm_type
is the type of PM requiring the loadset

device_no
is the device number with a range of 0-255

Basic call processing (continued)

unit_no
is the unit number, 0 or 1

6 Each unit of the XPM may now be loaded with the PPXL by typing

>BSY UNIT unit_no

and pressing the Enter key.

>LOADPM UNIT unit_no

and pressing the Enter key.

>RTS UNIT unit_no

and pressing the Enter key.

where

unit_no
is the unit number of the XPM to be loaded

7 Perform a SWACT of the XPM and repeat step 6.

Note 1: Once loaded, the XPM may have additional patches applied or removed in the same manner used with XPM loads in the past. Also, any patches built into the PPXL may be removed from the load as long as the actual patch file is present on disk.

Note 2: Any patches added or removed following loading of a PPXL will be automatically applied or removed upon subsequently reloads of the PPXL.

The following table shows the datafill specific to Basic call processing for table PMLOADS. Only those fields that apply directly to Basic call processing are shown. For a description of the other fields, refer to the data schema section of the *Translations Guide*.

Datafilling table PMLOADS (Sheet 1 of 2)

Field	Subfield or refinement	Entry	Explanation and action
LOADNAME		up to 32 characters	Peripheral module load name. Enter the XPM load name. This name must be equal to the load name specified in table LTCINV.
ACTFILE		0 to 32	Active load file name. The name of the active XPM loadfile. This could be the original loadfile or a patched loadfile (PPXL). Prior to patching, this will be the original load name. XPM load file patching updates the field but only after the load has been patched for a period of soak time.

Datafilling table PMLOADS (Sheet 2 of 2)

Field	Subfield or refinement	Entry	Explanation and action
ACTVOL		up to 16 characters	Active volume. Identifies the device where the active loadfile is stored. Range is the set of disk drive unit (DDU) volumes and system load module (SLM) disks available to the CM (S00DXPM).
BKPFILE		up to 32 characters	Backup load file name. Identifies the name of the backup XPM loadfile. It should be the same name as the LOADNAME field.
BKPVOL		up to 16 characters	Backup volume. The device where the backup loadfile is stored. Range is the set of DDU volumes and SLM disks available to the CM (S00DXPM).
UPDACT		Y or N	Update active filename. Controls if the loadfile is eligible for loadfile patching and if table PMLOADS fields ACTFILE and ACTVOL should be automatically updated with the patched loadfile name. For BCS36, the value is forced to N.

Datafill example for table PMLOADS

The following example shows sample datafill for table PMLOADS.

MAP display example for table PMLOADS

```
LOADNAME
 ACTFILE        ACTVOL
 BKPFILE        BKPVOL   UPDACT
_____________________________________________________________________

        ESS05AW
ESS05AW_950205      S001DXPM
        ESS05AW     S001DXPM        N
```

Datafilling table PMNODES

Table Peripheral module nodes (PMNODES) is read only, used by the CM to control XPM unit node tables. Table PMNODES is automatically datafilled when entries are added or changed in inventory tables. An entry will exist in table PMNODES for all subtending nodes of each XPM. Fields will be updated to reflect CM control of configuration data tables (CDT) in the XPM

Basic call processing (continued)

nodes. As nodes are deleted holes may appear in the table. These can not always be filled when a new node is added. Tuples in table PMNODES are managed so that all subtending nodes must have a higher index than their head node.

Datafilling table PMNODES for SMS basic operation (Sheet 1 of 3)

Field	Subfield or refinement	Entry	Explanation and action
TABKEY		0 to 4095 0 to 117	Table key. Two-part key, separated by a space, identifying the XPM where the unit node table is. The first part is host external node number. The second part is internal index number. Examples: The first key of an LTC with an external node number of 25 would be 25 1. The key of the first XPM attached to the LTC would be 25 2.
EXTNDNUM		0 to 4095	External node number. External number assigned by CM to the XPM identified in field TABKEY. Example: If the first XPM in the example above was an SMS with an external node of 33 the key of 25 2 would reference the SMS node.
NODETYPE		SMS_NODE	Node type of XPM. Generic type of PM node. Examples: LTC_NODE, RCC_NODE, LCM_NODE, SMS_NODE, and RCS_NODE.
PMTYPE		SMS	PM type. Specific PM type assigned to the node. Examples: RCC2, RCS, SMS, and LTC.
LEVEL		0 to 15	PM level. The number of device levels the XPM node is separated from the messaging host. Begins at level 0 for messaging (head) XPMs. Example: An RCS at level 2, attached to the SMS at level 1, which is attached to the host LTC at level 0.
MSGHOST		0 to 4095	Messaging host. External node responsible for transferring messages to this node. A messaging host must be capable of transferring messages. Examples: LTC, SMS, and RCC. Examples of XPMs not capable of being a messaging host are: RCS and SMSR.
PHYSHOST		0 to 4095	Physical host. External node to which this XPM node is physically attached.

Datafilling table PMNODES for SMS basic operation (Sheet 2 of 3)

Field	Subfield or refinement	Entry	Explanation and action
PORTS		0 to 127	Number of ports. Total number of P-side ports in the physical host required by this XPM node.
STPORT		0 to 255	Starting port. First P-side port in the physical host used by this XPM node.
TERMS		0 to 4095	Number of terminals. Total number of terminals in the physical host required by this XPM node.
STTERM		0 to 8675	Starting terminal. First terminal in the physical HOST used by this XPM node.
PROTOCOL		alphanumeric	Message protocol. Type of message protocol used by the physical host to node links. Examples: MDS30, MDMSX, MHDLC
MS		M or S	Master or slave. M if this node contains the master clock.
IPML		Y or N	Inter-peripheral message link (IPML). Y if this node is configured as part of an IPML.
MODE		T or P	Table entry mode. Entries in table are made by terminal (T) or port (P) indexing.
SLLCON		Y or N	Site line load control. Y if this node is at a site using Essential Line Service Protection (ESP) or other site line load control features.
NT6X28		N	Uses NT6X28 card. Y if this XPM uses the NT6X28 card. The NT6X28 signaling interface card is used on the International Digital Trunk Controller (IDTC). Enter N.
LCMLGMEM		Y or N	LCM large memory. Y if this XPM is an LCM with large memory (256k bytes). Enter N.
RSVPORTS		Y or N	Reserved ports. Y if this XPM has ports that are reserved for messaging.
RSVTERMS		Y or N	Reserved terminals. Y if this XPM has terminals that are reserved for messaging.
MATENODE		Y or N	Mate node. Y if this node is part of a dual configuration.

Basic call processing (continued)

Datafilling table PMNODES for SMS basic operation (Sheet 3 of 3)

Field	Subfield or refinement	Entry	Explanation and action
PACKED		Y or N	Packed internal tables. Y if internal node tables are packed on this node. Prior to this feature the node table was compressed when the XPM was RTS with the NODATASYNC option. Compression will now only happen when both units of an XPM ar taken out-of-service (OOS) and loaded by the CM.
SUPPCDM		Y Y	Support configuration data table (CDT). Y for each unit if CDT management is supported.
CMINCTRL		Y or N	CM node control. Y if the node is under CM control.

Datafill example for table PMNODES

The following examples show datafill for an LTC node with an RCC2 node connected and an LCME connected to the RCC2.

MAP display example for table PMNODES (SMS tuple)

```
Table: PMNODES

  TABKEY  EXTNDNUM   NODETYPE   PMTYPE LEVEL MSGHOST  PHYSHOST  PORTS
  29   1        29   LTC_NODE     SMS      0      29        29     16

STPORT  TERMS STTERM  PROTOCOL MS IPML MODE SLLCON NT6X28 LCMLGMEM RSVPORTS
     0    641      1   MDS30A   S    N    P      N      N        N         Y

RSVTERMS MATENODE  PACKED SUPPCDM CMINCTRL

       Y        N      Y       YY        Y
```

MAP display example for table PMNODES (SMS to RCS tuple)

```
Table: PMNODES

  TABKEY  EXTNDNUM   NODETYPE   PMTYPE LEVEL MSGHOST  PHYSHOST  PORTS
  29   2        76   RCS_NODE      RCS     1      29        29     18

STPORT  TERMS STTERM  PROTOCOL MS IPML MODE SLLCON NT6X28 LCMLGMEM RSVPORTS
    16     98    642      MNIL  M   N    P      N      N        Y         Y

RSVTERMS MATENODE  PACKED SUPPCDM CMINCTRL

       Y       N        Y      YY        Y
```

Note: Each XPM node in the link that is capable of messaging would have a tuple in table PMNODES to address the LCME.

Datafilling table LTCINV

Table LTCINV contains the inventory data, excluding P-side link assignments (table LTCPSINV), for various peripheral module types including the SMS.

The following table shows the datafill specific to Basic call processing for table LTCINV. Only those fields that apply directly to Basic call processing are shown. For a description of the other fields, refer to the Data schema section of the *Translations Guide*.

Datafilling table LTCINV (Sheet 1 of 6)

Field	Subfield or refinement	Entry	Explanation and action
LTCNAME		see subfields	Line trunk controller name. This field is comprised of subfields XPMTYPE and XPMNO.
	XPMTYPE	SMS	Peripheral module type. Enter the type of peripheral module.
	XPMNO	0 to 255	Peripheral module number. Enter the peripheral module number.

Note 1: Changes to fields with multiple entries should be made in the PROMPT mode only.

Note 2: Currently, 6X40BA is not included in the range of values for field PEC6X40. When the 6X40BA is provisioned, datafill PEC6X40 field as 6X40AC.

Note 3: Loadname must be datafilled in table PMLOADS before datafilling in table LTCINV.

Note 4: Memory is automatically allocated for a maximum of 128 tuples in the NT40 and 256 tuples in the DMS SuperNode for table LTCINV.

Note 5: Enter the continuation mark (+) in fields with multiple possible entries when more data is specified on the next line or more records will be entered. Enter the end mark ($) in fields with multiple possible entries after the last entry.

Basic call processing (continued)

Datafilling table LTCINV (Sheet 2 of 6)

Field	Subfield or refinement	Entry	Explanation and action
ADNUM		1 to 4095	External administrative number. Enter a unique external administrative number associated with the PM. The ADNUM value is used as the key for indexing into operational measurements (OM) data for OM groups line traffic OM group (LMD) and universal tone receivers (UTR) OM group. Field ADNUM cannot be changed if the OM counts for that PM are included in an engineering and administrative data acquisition system/data collection (EADAS/DC) section associated with LMD or UTR. Any entry outside the range indicated for this field is invalid.
FRTYPE		SME	Frame type. Enter the frame type where the peripheral module equipment is mounted.
FRNO		0 to 511	Frame Number. Enter the frame number of the SME.
SHPOS		18, 32, 51, or 65	Shelf position. Enter the position of the shelves on the frame in inches, above the floor level.
FLOOR		0 to 99	Floor. Enter the floor where the peripheral module equipment frame is located.
ROW		A-H, J-N, P-Z, AA-HH, JJ-NN, or PP-ZZ	Row. Enter the row on the floor where the peripheral module equipment frame is located.

Note 1: Changes to fields with multiple entries should be made in the PROMPT mode only.

Note 2: Currently, 6X40BA is not included in the range of values for field PEC6X40. When the 6X40BA is provisioned, datafill PEC6X40 field as 6X40AC.

Note 3: Loadname must be datafilled in table PMLOADS before datafilling in table LTCINV.

Note 4: Memory is automatically allocated for a maximum of 128 tuples in the NT40 and 256 tuples in the DMS SuperNode for table LTCINV.

Note 5: Enter the continuation mark (+) in fields with multiple possible entries when more data is specified on the next line or more records will be entered. Enter the end mark ($) in fields with multiple possible entries after the last entry.

Datafilling table LTCINV (Sheet 3 of 6)

Field	Subfield or refinement	Entry	Explanation and action
FRPOS		0 to 99	Frame position. Enter the position in the row of the peripheral module equipment frame.
EQPEC		alphanumeric	Equipment product engineering code. Enter the PEC of the peripheral module.
LOAD		alphanumeric	Load. Enter the name given to the issue of peripheral module software.
EXECTAB		see subfields	Executive table. This field is comprised of subfields TRMTYPE, and EXEC. The vector is from 1 to 8. See Note 5 for information about terminating data entry.
	TRMTYPE	terminal type	Terminal type. Enter the type of peripheral module terminals used. Enter POTS for regular lines.
	EXEC	alphanumeric	Executive programs. Enter the set of executive programs required for the peripheral module specified in the TRMTYPE field.
CSLNKTAB		see subfields	C-side link table. For switches equipped with the old junctored network (JNET), this field is comprised of subfields NMPAIR, and NMPORT. See Note 5 for information about terminating data entry. For switches equipped with the new enhanced network (ENET), this field is comprised of subfields ENPAIR, ENSLOT, and ENLINK. See Note 5 for information about terminating data entry.

Note 1: Changes to fields with multiple entries should be made in the PROMPT mode only.

Note 2: Currently, 6X40BA is not included in the range of values for field PEC6X40. When the 6X40BA is provisioned, datafill PEC6X40 field as 6X40AC.

Note 3: Loadname must be datafilled in table PMLOADS before datafilling in table LTCINV.

Note 4: Memory is automatically allocated for a maximum of 128 tuples in the NT40 and 256 tuples in the DMS SuperNode for table LTCINV.

Note 5: Enter the continuation mark (+) in fields with multiple possible entries when more data is specified on the next line or more records will be entered. Enter the end mark ($) in fields with multiple possible entries after the last entry.

Basic call processing (continued)

Datafilling table LTCINV (Sheet 4 of 6)

Field	Subfield or refinement	Entry	Explanation and action
	NMPAIR	0 to 31	Network module pair number. Enter the network link where the peripheral module is assigned, corresponding to the provisioned C-side links of the peripheral module.
	NMPORT	0 to 63	Network port number. Enter the network port corresponding to the link.
	ENPAIR	0 to 3	ENET pair number. Enter the network link where the peripheral module is assigned, corresponding to the provisioned C-side links of the peripheral module.
	ENSLOT	9 to 32	ENET slot number. Enter the crosspoint slot number where the peripheral module is assigned, corresponding to the provisioned C-side links of the peripheral module.
	ENLINK	0 to 15	ENET link number. Enter the link on the crosspoint where the peripheral module is assigned, corresponding to the provisioned C-side links of the peripheral module.
OPTCARD		alphanumeric	Optional card. The range of values for SMS includes MSG6X69, CMR16, and UTR17. If CMR16 is entered, the user is also prompted to enter the CMR software load name. The default value is MSG6X69. If NT7X05AA is entered, the system prompts for the slot_number. Optional card slot numbers include 13, 15, 16, 17, and 19.

Note 1: Changes to fields with multiple entries should be made in the PROMPT mode only.

Note 2: Currently, 6X40BA is not included in the range of values for field PEC6X40. When the 6X40BA is provisioned, datafill PEC6X40 field as 6X40AC.

Note 3: Loadname must be datafilled in table PMLOADS before datafilling in table LTCINV.

Note 4: Memory is automatically allocated for a maximum of 128 tuples in the NT40 and 256 tuples in the DMS SuperNode for table LTCINV.

Note 5: Enter the continuation mark (+) in fields with multiple possible entries when more data is specified on the next line or more records will be entered. Enter the end mark ($) in fields with multiple possible entries after the last entry.

Datafilling table LTCINV (Sheet 5 of 6)

Field	Subfield or refinement	Entry	Explanation and action
TONESET		NORTHAM or NORTHAA	Tone set. Enter the tone set appropriate for the switch being datafilled. To enable the North American tone set, valid entries would be NORTHAM or NORTHAA.
PECS6X45		alphanumeric	6X45 (processor) type PECs. Enter the two product engineering codes of the MX77 cards if equipped. One PEC is required for each unit of the SMS. Enter the PEC for unit 0 first. The PEC datafilled for a unit must correspond to the minimum firmware capabilities among the processors in its' processor complex. For example, if the UP is a MX77AA, enter MX77AA twice in this field.
E2LOAD		alphanumeric (vector of up to 8 characters)	Electrically erasable PROM load name. Enter the EEPROM load name. If the shelf is equipped with a processor that is different from NTMX77, field E2LOAD is automatically datafilled with NILLOAD. ***Note:*** Datafill the PMLOAD file name in table PMLOADS before datafilling field E2LOAD in table LTCINV.
OPTATTR			Optional attribute. This vector is datafilled for DTC peripheral modules only. Enter a dollar sign ($) to end the vector.

Note 1: Changes to fields with multiple entries should be made in the PROMPT mode only.

Note 2: Currently, 6X40BA is not included in the range of values for field PEC6X40. When the 6X40BA is provisioned, datafill PEC6X40 field as 6X40AC.

Note 3: Loadname must be datafilled in table PMLOADS before datafilling in table LTCINV.

Note 4: Memory is automatically allocated for a maximum of 128 tuples in the NT40 and 256 tuples in the DMS SuperNode for table LTCINV.

Note 5: Enter the continuation mark (+) in fields with multiple possible entries when more data is specified on the next line or more records will be entered. Enter the end mark ($) in fields with multiple possible entries after the last entry.

Basic call processing (continued)

Datafilling table LTCINV (Sheet 6 of 6)

Field	Subfield or refinement	Entry	Explanation and action
PEC6X40		alphanumeric	6X40 PEC. Enter the version of the 6X40 card in the peripheral. The range is 6X40AA, 6X40AB, and 6X40AC. The default is 6X40AA. The value entered is displayed in error messages when a faulty card is detected. See Note 2.
EXTINFO (CSP02-)		see subfield	Extension shelf information. This field consists of subfield EXTSHELF.
	EXTSHELF (CSP02-)	Y or N	Extension shelf. If the PM is a CPM-based host peripheral, for example a GPP, and it is equipped with an extension shelf, enter Y (yes) and datafill the fields below. Otherwise, enter N (no); no other datafill is required. The default value for this field is N.

Note 1: Changes to fields with multiple entries should be made in the PROMPT mode only.

Note 2: Currently, 6X40BA is not included in the range of values for field PEC6X40. When the 6X40BA is provisioned, datafill PEC6X40 field as 6X40AC.

Note 3: Loadname must be datafilled in table PMLOADS before datafilling in table LTCINV.

Note 4: Memory is automatically allocated for a maximum of 128 tuples in the NT40 and 256 tuples in the DMS SuperNode for table LTCINV.

Note 5: Enter the continuation mark (+) in fields with multiple possible entries when more data is specified on the next line or more records will be entered. Enter the end mark ($) in fields with multiple possible entries after the last entry.

Datafill example for table LTCINV

The following example shows sample datafill for table LTCINV.

MAP display example for table LTCINV

```
LTCNAME
    ADDNUM  FRTYPE  FRNO  SHPOS  FLOOR  ROW  FRPOS  EQPEC   LOAD
                                                            EXECTAB
                                                           CSLNKTAB
                                                            OPTCARD
TONESET      PECS6X45
                     E2LOAD
                                                            OPTATTR
PEC6X40
_____________________________________________________________
SMS 0
      SME   0    32   0    C    1 6X02AA    NSS31BE2
                                             (POTS POTSEX)$
                            ( 0 40) ( 0 42) ( 1 40) ( 0 30)$
                           ( MSG6X69 )(UTR17)
(   CMR16 CMR33AI5) ( NT7X05AA 13)$
NORTHAA    MX77AA MX77AA
                       MX77NH09
6X40AC
```

Datafilling table LTCPSINV

Table LTCPSINV lists the following data assignment for each bay associated with an SMS unit:

- peripheral module type and number
- port designation of the P-side links

The following table shows the datafill specific to Basic call processing for table LTCPSINV. Only those fields that apply directly to Basic call processing are

Basic call processing (continued)

shown. For a description of the other fields, refer to the data schema section of the *Translations Guide*.

Datafilling table LTCPSINV (Sheet 1 of 2)

Field	Subfield or refinement	Entry	Explanation and action
LTCNAME		see subfields	Line trunk controller name. This field is comprised of subfields XPMTYPE and XPMNO.
	XPMTYPE	SMS	Peripheral module type. Enter the type of peripheral module.
	XPMNO	0 to 255	Peripheral module number. Enter the peripheral module number.
PSLNKTAB		see subfields	P-side link table. This field is comprised of subfields PSLINK, PSDATA, CARRIDX, and ACTION. See Note 4 for information about terminating data entry.
	PSLINK	0 to 19	P-side link. Enter the P-side port number.
	PSDATA	NILTYPE	P-side data. Enter DS1 for DS-1-type interface card. NILTYPE is the default value and should not be datafilled for initial input. If the entry is NILTYPE, no additional fields need to be datafilled. If the entry is DS-1, subfields CARRIDX and ACTION must be datafilled.

Note 1: Changes to fields with multiple entries should be made in the PROMPT mode only.

Note 2: Memory is automatically allocated for a maximum of 128 tuples in the NT40 and 256 tuples in the DMS SuperNode for table LTCPSINV.

Note 3: Table LTCPSINV is automatically datafilled when table LTCINV is datafilled. Tuples cannot be added or deleted, only changed.

Note 4: Enter the continuation mark (+) in fields with multiple possible entries when more data is specified on the next line or more records will be entered. Enter the end mark ($) in fields with multiple possible entries after the last entry.

Datafilling table LTCPSINV (Sheet 2 of 2)

Field	Subfield or refinement	Entry	Explanation and action
	CARRIDX	DEFAULT	Carrier index. The default value is DEFAULT. Other entries include PRIMARY or PROTECTION. Enter the same value for the template name in table CARRMTC.
	ACTION	Y or N	Action. Enter Y if the carrier should be removed from service when the out-of-service limit for frame, slip, errored-second, or severe errored-second is exceeded. Otherwise, enter N.

Note 1: Changes to fields with multiple entries should be made in the PROMPT mode only.

Note 2: Memory is automatically allocated for a maximum of 128 tuples in the NT40 and 256 tuples in the DMS SuperNode for table LTCPSINV.

Note 3: Table LTCPSINV is automatically datafilled when table LTCINV is datafilled. Tuples cannot be added or deleted, only changed.

Note 4: Enter the continuation mark (+) in fields with multiple possible entries when more data is specified on the next line or more records will be entered. Enter the end mark ($) in fields with multiple possible entries after the last entry.

Datafill example for table LTCPSINV

The following example shows sample datafill for table LTCPSINV.

MAP display example for table LTCPSINV

```
LTCNAME
                                                    PSLNKTAB
_____________________________________________________________________
SMS    0
    (0 DS1 DEFAULT N) (1 DS1 DEFAULT N) (2 DS1 DEFAULT N)
    (3 DS1 DEFAULT N) (4 NILTYPE) (5 DS1 DEFAULT N)
    (6 DS1 DEFAULT N) (7 DS1 DEFAULT N) (8 DS1 DEFAULT N)
    (9 DS1 NILTYPE N) (10 NILTYPE) (11 NILTYPE)
    (12 NILTYPE) (13 NILTYPE) (14 NILTYPE) (14 NILTYPE)
    (15 NILTYPE) (16 NILTYPE) (17 NILTYPE) (18 NILTYPE)
    (19 NILTYPE)  $
```

Basic call processing (continued)

Datafilling table RCSINV

Controlling modes

The remote concentrator SLC-96 (RCS) has four line shelves. These shelves are A, B, C and D. Shelf group AB contains shelves A and B. Shelf group CD contains shelves C and D. Each shelf group operates separately. Each shelf group can be operated in one of the following modes:

- *Mode I:* This shelf group is not concentrated. This shelf group is for single and multi-party lines. One or two DS-1 lines connect to a shelf group in this mode. This connection depends on if one or two shelves are equipped.
- *Mode II:* This shelf group is concentrated. A maximum of 48 lines of each shelf group are concentrated on 24 channels. One DS-1 line connects to a shelf group in this mode.
- *Mode III:* This shelf group is not concentrated. The complete shelf group is dedicated to coin, data lines, or other special service lines. One DS-1 line connects to a shelf group in this mode.

The mode of a shelf group depends on the cards installed in the SLC-96 system. Program control cannot change the mode.

Central side (C-side) link information in the RCS depends on the mode of operation of each of the two shelf groups. In Mode I one or two C-side links for a shelf group can be present. In Modes II and III, one C-side link for each shelf group can be present.

Protection lines

A protection line is a standby DS-1 link between the SMS and RCS. The protection line is always powered up. The protection line always transmits a bit stream identical to that of the A digital line. This transmission allows the A-link to be switched in less time than the B-, C-, or D-links. A single PROTLINE has only one RCS. The ratio of protection lines to normal DS-1 links (normlines) can be 1:2, 1:3, or 1:4. This ratio depends on the mode of operation of the shelf groups.

A protection switch preserves calls in the talking and ringing states but not in the digit collection state. If any DS-1 line is part of a nailed-up cross-connection, the use of that DS-1 as a protection line cannot occur. Datafill for the RCSINV table is affected. The SMS peripheral side (P-side) port where a protection line connects is entered. The SMS P-side port where a DS-1 line connects cannot be entered as the protection line port. This action does not occur if the DS-1 line is part of a nailed-up cross-connection.

If a DS-1 line has channels that are part of a nailed-up cross-connection, an RCS cannot be attached to this line in table RCSINV. A channel instead of a

line as the endpoint in table PSNAILUP indicates a nailed-up cross-connection.

The exact datafill for Basic Call Processing for table RCSINV appears in the following table. Only fields that apply to Basic Call Processing appear in the table. Refer to the data schema section of the *Translations Guide* for a description of the other fields.

Datafilling table RCSINV (Sheet 1 of 10)

Field	Subfield or refinement	Entry	Explanation and action
RCSNO		see subfields	Remote concentrator module number. This field contains subfields SITE, FRAME, and UNIT.
	SITE	alphanumeric	Site. Enter the location of the RCS. This entry is not optional. This entry does not have a default value.
	FRAME	0 to 99	Frame. Enter the remote concentrator module frame number that identifies the RCS modules that share the same metallic test pair. The frame number is not a physical frame but a software entity. All RCS modules that share the same metallic test pair have the same frame number.
	UNIT	0 to 9	Unit. Enter the remote concentrator module unit number.
FRTYPE		MIS	Frame type. Enter the frame type where the peripheral module equipment is.

Note 1: An SMS DS-1 interface card has two ports for DS-1 lines. Two DS-1 lines that lead from the same SMS DS-1 card must connect to different RCS modules. With one DS-1 line connected, you can remove an interface card without the disruption of ongoing calls. The connected DS-1 links are protection switched.

Note 2: To change the position of a DS-1 link on an RCS, you must reposition all DS-1 links on the RCS. For example, four DS-1 links are assigned to SMS P-side links 0, 1, 2, and 3 (LKINFO field of table RCSINV). You want to reposition link 0 as link 5. You must reposition links 1, 2, and 3 as new links (6, 7, and 8, for example). Now you can return links 6, 7, and 8 to the original assignments as links 1, 2, and 3. When all DS-1 links (SMS ports) are in use and you must reposition one link, delete the RCS. Add the RCS to the system again.

Note 3: A continuous allocation of memory occurs for a maximum of 255 entries.

Note 4: Make changes to fields with multiple entries in the PROMPT mode only.

Basic call processing (continued)

Datafilling table RCSINV (Sheet 2 of 10)

Field	Subfield or refinement	Entry	Explanation and action
FRNO		0 to 511	Frame number. Enter the frame number of the RCS. This number should be different for each office.
SHPOS		0 to 77	Shelf position. Enter the position of the RCS control shelf in inches above the floor level.
FLOOR		0 to 99	Floor. Enter the floor where the peripheral module equipment frame is.
ROW		A-H, J-N, P-Z, AA-HH, JJ-NN, PP-ZZ	Row. Enter the row on the floor in which the peripheral module equipment frame is.
FRPOS		0 to 99	Frame position. Enter the position in the row of the peripheral module equipment frame.
LOAD		NO_LOAD	Load. Enter the name given to the issue of peripheral module software. The RCS does not require a load.
CSPMNO		see subfields	C-Side peripheral module number. This field contains subfields PMTYPE and PMNO.
	PMTYPE	SMS	Peripheral module type. Enter the type of peripheral module where the RCS is attached.
	PMNO	0 to 127	Peripheral module number. Enter the peripheral module number where the RCS is attached.

Note 1: An SMS DS-1 interface card has two ports for DS-1 lines. Two DS-1 lines that lead from the same SMS DS-1 card must connect to different RCS modules. With one DS-1 line connected, you can remove an interface card without the disruption of ongoing calls. The connected DS-1 links are protection switched.

Note 2: To change the position of a DS-1 link on an RCS, you must reposition all DS-1 links on the RCS. For example, four DS-1 links are assigned to SMS P-side links 0, 1, 2, and 3 (LKINFO field of table RCSINV). You want to reposition link 0 as link 5. You must reposition links 1, 2, and 3 as new links (6, 7, and 8, for example). Now you can return links 6, 7, and 8 to the original assignments as links 1, 2, and 3. When all DS-1 links (SMS ports) are in use and you must reposition one link, delete the RCS. Add the RCS to the system again.

Note 3: A continuous allocation of memory occurs for a maximum of 255 entries.

Note 4: Make changes to fields with multiple entries in the PROMPT mode only.

Datafilling table RCSINV (Sheet 3 of 10)

Field	Subfield or refinement	Entry	Explanation and action
ABINFO		see subfields	AB shelf group information. This field contains subfields MODE, LINKINFO, and LOOPTEST.
	MODE	MODE1, MODE2, MODE3, NILMODE	Mode. Enter the mode of operation of shelf group AB. You can choose the entry NILMODE. This entry is not supported and is not recommended.
	LINKINFO	0 to 19	C-side link information. Enter the SMS P-side ports to which C-side links ABLK0 to ABLK1 of the RCS are assigned. This is a vector. A vector is a maximum of one entry or a maximum of two entries. Enter a dollar sign ($) to terminate the vector. For MODE2 and MODE3, use only the ABLK0 entry. For MODE1, use ABLK0 when equipped with one shelf or ABLK0 and ABLK1 when equipped with two shelves.

Note 1: An SMS DS-1 interface card has two ports for DS-1 lines. Two DS-1 lines that lead from the same SMS DS-1 card must connect to different RCS modules. With one DS-1 line connected, you can remove an interface card without the disruption of ongoing calls. The connected DS-1 links are protection switched.

Note 2: To change the position of a DS-1 link on an RCS, you must reposition all DS-1 links on the RCS. For example, four DS-1 links are assigned to SMS P-side links 0, 1, 2, and 3 (LKINFO field of table RCSINV). You want to reposition link 0 as link 5. You must reposition links 1, 2, and 3 as new links (6, 7, and 8, for example). Now you can return links 6, 7, and 8 to the original assignments as links 1, 2, and 3. When all DS-1 links (SMS ports) are in use and you must reposition one link, delete the RCS. Add the RCS to the system again.

Note 3: A continuous allocation of memory occurs for a maximum of 255 entries.

Note 4: Make changes to fields with multiple entries in the PROMPT mode only.

Basic call processing (continued)

Datafilling table RCSINV (Sheet 4 of 10)

Field	Subfield or refinement	Entry	Explanation and action
	LOOPTEST	Y or N	PCM looping test. Enter Y to enable the PCM looping test in Mode II. This field appears only for Mode II shelf groups. ***Note:*** If the PCM looping test fails, a minor alarm occurs. The associated DS-1 channel and line card (channel unit) are not used for call processing. The PCM looping test is run again periodically to determine if the problem was corrected. A PCM looping test failure on two different DS-1 channels causes a major alarm. The alarm causes the removal of the associated shelf group from service.
CONTMARK		+	Continuation mark. Enter a plus sign (+) to indicate that additional data for the peripheral module is specified on the next record. You can also enter a dollar sign ($) to end the vector.
CDINFO		see subfields	CD shelf group information. This field contains subfields MODE, LINKINFO, and LOOPTEST.
	MODE	MODE1, MODE2, MODE3, NILMODE	Mode. Enter the mode of operation of shelf group CD. You can choose entry NILMODE. This entry is not supported and is not recommended.

Note 1: An SMS DS-1 interface card has two ports for DS-1 lines. Two DS-1 lines that lead from the same SMS DS-1 card must connect to different RCS modules. With one DS-1 line connected, you can remove an interface card without the disruption of ongoing calls. The connected DS-1 links are protection switched.

Note 2: To change the position of a DS-1 link on an RCS, you must reposition all DS-1 links on the RCS. For example, four DS-1 links are assigned to SMS P-side links 0, 1, 2, and 3 (LKINFO field of table RCSINV). You want to reposition link 0 as link 5. You must reposition links 1, 2, and 3 as new links (6, 7, and 8, for example). Now you can return links 6, 7, and 8 to the original assignments as links 1, 2, and 3. When all DS-1 links (SMS ports) are in use and you must reposition one link, delete the RCS. Add the RCS to the system again.

Note 3: A continuous allocation of memory occurs for a maximum of 255 entries.

Note 4: Make changes to fields with multiple entries in the PROMPT mode only.

Datafilling table RCSINV (Sheet 5 of 10)

Field	Subfield or refinement	Entry	Explanation and action
	LINKINFO	0 to 19	C-Side link information. Enter the SMS P-side ports where C-side links CDLK0 to CDLK1 of the RCS are assigned. This is a vector. A vector is a minimum of one entry or a maximum of two entries. Enter a dollar sign ($) to terminate the vector. For Mode 2 and Mode 3, use only the CDLK0 entry. For Mode 1, use CDLK0 when equipped with one shelf or CDLK0 and CDLK1 when equipped with two shelves.
	LOOPTEST	Y or N	PCM looping test. Enter Y to enable the PCM looping test in Mode 2. This field appears only for Mode 2 shelf groups. ***Note:*** If the PCM looping test fails, a minor alarm occurs. The associated DS-1 channel and line card (channel unit) are not used for call processing. The PCM looping test is run again periodically to determine if the problem was corrected. A PCM looping test failure on two different DS-1 channels causes a major alarm. The alarm causes the removal of the associated shelf group from service.

Note 1: An SMS DS-1 interface card has two ports for DS-1 lines. Two DS-1 lines that lead from the same SMS DS-1 card must connect to different RCS modules. With one DS-1 line connected, you can remove an interface card without the disruption of ongoing calls. The connected DS-1 links are protection switched.

Note 2: To change the position of a DS-1 link on an RCS, you must reposition all DS-1 links on the RCS. For example, four DS-1 links are assigned to SMS P-side links 0, 1, 2, and 3 (LKINFO field of table RCSINV). You want to reposition link 0 as link 5. You must reposition links 1, 2, and 3 as new links (6, 7, and 8, for example). Now you can return links 6, 7, and 8 to the original assignments as links 1, 2, and 3. When all DS-1 links (SMS ports) are in use and you must reposition one link, delete the RCS. Add the RCS to the system again.

Note 3: A continuous allocation of memory occurs for a maximum of 255 entries.

Note 4: Make changes to fields with multiple entries in the PROMPT mode only.

Basic call processing (continued)

Datafilling table RCSINV (Sheet 6 of 10)

Field	Subfield or refinement	Entry	Explanation and action

RNGTYPE		C,F, or S	Ring type. Enter the type of ringing for the remote concentrator module. Ring types are C (coded), F (frequency), or S (superimposed).
			
			Note: Enter only F, S, or C in the RNGTYPE field. If you enter other ring types, the following error message occurs:
			
			`UNRECOGNIZED RNGTYPE FOR RCS`
			
			Note: You cannot change the RNGTYPE field to FSR if line cards on the RCSINV table are entered as SCD221. Violation of this rule results in the following error message:
			
			`SELECTED RNGTYPE IS NOT VALID FOR RCS WITH CARD OF TYPE SCD221`
			
			Note: You cannot change the RINGTYPE field to S if any line cards on the RCS are entered as SCDFSR in LNINV. Violation of this rule results in the following error message.
			
			`SELECTED RNGTYPE IS NOT VALID FOR RCS WITH CARDS OF TYPE SCDFSR`

ACU		WP1 or WP1B	Alarm control unit. Enter the type of alarm control unit circuit pack. The range is WP1, WP1B. The difference between the two cards is the format of the alarm message sent to the office through the derived data link (DDL).

Note 1: An SMS DS-1 interface card has two ports for DS-1 lines. Two DS-1 lines that lead from the same SMS DS-1 card must connect to different RCS modules. With one DS-1 line connected, you can remove an interface card without the disruption of ongoing calls. The connected DS-1 links are protection switched.

Note 2: To change the position of a DS-1 link on an RCS, you must reposition all DS-1 links on the RCS. For example, four DS-1 links are assigned to SMS P-side links 0, 1, 2, and 3 (LKINFO field of table RCSINV). You want to reposition link 0 as link 5. You must reposition links 1, 2, and 3 as new links (6, 7, and 8, for example). Now you can return links 6, 7, and 8 to the original assignments as links 1, 2, and 3. When all DS-1 links (SMS ports) are in use and you must reposition one link, delete the RCS. Add the RCS to the system again.

Note 3: A continuous allocation of memory occurs for a maximum of 255 entries.

Note 4: Make changes to fields with multiple entries in the PROMPT mode only.

Datafilling table RCSINV (Sheet 7 of 10)

Field	Subfield or refinement	Entry	Explanation and action
PROTINFO		see subfields	Protection information. This field consists of subfield PROT, and PROT refinement subfield PORT.
	PROT	Y or N	Protection. Enter Y if the RCS has a protection line. If the RCS does not have a protection line, enter N. If the entry is Y, enter the PORT number.
	PORT	0 to 19	Port. Enter the SMS P-side port number of the protection line.
SCSDINFO		see subfields	This field consists of subfield SCSDUSED, and refinement subfields INHSCGRP, INHSCPT, INHSDGRP, and INHSDPT.

Note 1: An SMS DS-1 interface card has two ports for DS-1 lines. Two DS-1 lines that lead from the same SMS DS-1 card must connect to different RCS modules. With one DS-1 line connected, you can remove an interface card without the disruption of ongoing calls. The connected DS-1 links are protection switched.

Note 2: To change the position of a DS-1 link on an RCS, you must reposition all DS-1 links on the RCS. For example, four DS-1 links are assigned to SMS P-side links 0, 1, 2, and 3 (LKINFO field of table RCSINV). You want to reposition link 0 as link 5. You must reposition links 1, 2, and 3 as new links (6, 7, and 8, for example). Now you can return links 6, 7, and 8 to the original assignments as links 1, 2, and 3. When all DS-1 links (SMS ports) are in use and you must reposition one link, delete the RCS. Add the RCS to the system again.

Note 3: A continuous allocation of memory occurs for a maximum of 255 entries.

Note 4: Make changes to fields with multiple entries in the PROMPT mode only.

Basic call processing (continued)

Datafilling table RCSINV (Sheet 8 of 10)

Field	Subfield or refinement	Entry	Explanation and action
	SCSDUSED	Y or N	Scan and SD points used. Enter if the RCS requires an inhibit lead, that is, if SD and scan points are used. If the entry for this field is Y, the next four fields in this table must contain data. The scan and SD groups are defined in table SCGRP and table SDGRP, in the sequence given. When an inhibit lead is used, tables SCGRP and SDGRP must contain data before table RCSINV. An SD point activates ground on the inhibit lead associated with a metallic test pair. This condition occurs so that no more than one RCS or COT accesses a shared metallic test pair at one time. A scan point scans the inhibit lead to determine if ground is present. If ground is present, other RCS modules cannot access the metallic test pair.

Note 1: An SMS DS-1 interface card has two ports for DS-1 lines. Two DS-1 lines that lead from the same SMS DS-1 card must connect to different RCS modules. With one DS-1 line connected, you can remove an interface card without the disruption of ongoing calls. The connected DS-1 links are protection switched.

Note 2: To change the position of a DS-1 link on an RCS, you must reposition all DS-1 links on the RCS. For example, four DS-1 links are assigned to SMS P-side links 0, 1, 2, and 3 (LKINFO field of table RCSINV). You want to reposition link 0 as link 5. You must reposition links 1, 2, and 3 as new links (6, 7, and 8, for example). Now you can return links 6, 7, and 8 to the original assignments as links 1, 2, and 3. When all DS-1 links (SMS ports) are in use and you must reposition one link, delete the RCS. Add the RCS to the system again.

Note 3: A continuous allocation of memory occurs for a maximum of 255 entries.

Note 4: Make changes to fields with multiple entries in the PROMPT mode only.

Datafilling table RCSINV (Sheet 9 of 10)

Field	Subfield or refinement	Entry	Explanation and action
			The SD and scan cards each contain two groups. A group holds seven points. Before, a scan or SD point was used for the inhibit lead function. When this condition occurred, all points in that group became dedicated to the inhibit lead function. The following four fields are used for entry: • INHSCGRP • INHSCPT • INHSDGRP • INHSDPT These fields are used for entry and complete scan or SD groups need not be dedicated for the inhibit lead function.
	INHSCGRP	0 to 511	Inhibit scan group. Enter the number of the scan group, defined in table SCGRP, that contains the scan point used for the inhibit lead function.
	INHSCPT	0 to 6	Inhibit scan point. Enter the number of the scan point used for the inhibit lead function.
	INHSDGRP	0 to 511	Inhibit signal distribution group. Enter the number of the SD group that contains the SD point used for the inhibit lead function. Table SDGRP defines the number of the SD group.

Note 1: An SMS DS-1 interface card has two ports for DS-1 lines. Two DS-1 lines that lead from the same SMS DS-1 card must connect to different RCS modules. With one DS-1 line connected, you can remove an interface card without the disruption of ongoing calls. The connected DS-1 links are protection switched.

Note 2: To change the position of a DS-1 link on an RCS, you must reposition all DS-1 links on the RCS. For example, four DS-1 links are assigned to SMS P-side links 0, 1, 2, and 3 (LKINFO field of table RCSINV). You want to reposition link 0 as link 5. You must reposition links 1, 2, and 3 as new links (6, 7, and 8, for example). Now you can return links 6, 7, and 8 to the original assignments as links 1, 2, and 3. When all DS-1 links (SMS ports) are in use and you must reposition one link, delete the RCS. Add the RCS to the system again.

Note 3: A continuous allocation of memory occurs for a maximum of 255 entries.

Note 4: Make changes to fields with multiple entries in the PROMPT mode only.

Basic call processing (continued)

Datafilling table RCSINV (Sheet 10 of 10)

Field	Subfield or refinement	Entry	Explanation and action
	INHSDPT	0 to 6	Inhibit signal distribution point. Enter the number of the SD point used for the inhibit lead function.
MISCTEXT		alphanumeric	Miscellaneous text. Enter the text that associates with the power/miscellaneous alarm. The length must not exceed 16 characters. Use the underscore (_) instead of blanks to separate words. Text entered after blanks is truncated. The underscores are converted to blanks prior to being displayed. The text entered appears in PM128 logs and in selected MAP displays when the associated alarm occurs.
ALMSEVER		MINOR or MAJOR	Alarm severity. Enter the severity associated with the alarm.
LOCATION		alphanumeric	Location. Enter a maximum of 32 characters to identify the remote location of an RCS from the central office. ***Note:*** The location can identify the street location of the RCS. A blank space can be a requirement in the location information. The command interpreter (CI) does not allow spaces. To indicate a space in the LOCATION field, an underscore (_) character can be used.

Note 1: An SMS DS-1 interface card has two ports for DS-1 lines. Two DS-1 lines that lead from the same SMS DS-1 card must connect to different RCS modules. With one DS-1 line connected, you can remove an interface card without the disruption of ongoing calls. The connected DS-1 links are protection switched.

Note 2: To change the position of a DS-1 link on an RCS, you must reposition all DS-1 links on the RCS. For example, four DS-1 links are assigned to SMS P-side links 0, 1, 2, and 3 (LKINFO field of table RCSINV). You want to reposition link 0 as link 5. You must reposition links 1, 2, and 3 as new links (6, 7, and 8, for example). Now you can return links 6, 7, and 8 to the original assignments as links 1, 2, and 3. When all DS-1 links (SMS ports) are in use and you must reposition one link, delete the RCS. Add the RCS to the system again.

Note 3: A continuous allocation of memory occurs for a maximum of 255 entries.

Note 4: Make changes to fields with multiple entries in the PROMPT mode only.

Datafill example for table RCSINV

Sample datafill for table RCSINV (mode I) appears in the following example.

MAP example for table RCSINV tuple (mode I)

```
TAB: RCSINV

  RCSNO  FRTYPE  FRNO  SHPOS  FLOOR  ROW  FRPOS     LOAD     CSPMNO
           ABINFO                CDINFO    RNGTYPE   ACU  PROTINFO
  SCSDINFO      MISCTEXT   ALMSEVER

_____________________________________________________________________

REM1 00 0 MIS  1      18     1    C    8         NO_LOAD      SMS 0
    MODE1 (1) (5)$          MODE1   (3) (6)$        S  WP1B    Y  8
      N        HIGH_TEMP     MAJOR   35 DAVIS DRIVE RTP
```

Sample datafill for table RCSINV (mode II) appears in the following example.

MAP example for table RCSINV tuple (mode II)

```
TAB: RCSINV

RCSNO  FRTYPE  FRNO  SHPOS  FLOOR  ROW  FRPOS     LOAD      CSPMNO
          ABINFO                CDINFO   RNGTYPE     ACUPROTINFO
SCSDINFO     MISCTEXT ALMSEVER

_____________________________________________________________________

RCS1 00 1 MIS  2    51     0       C    9        NO_LOAD      SMS 0
    MODE2 (0) $ N       MODE2      (2)    $    N    S  WP1B    Y  7
      N        HIGH_TEMP   MAJOR      35 DAVIS DRIVE RTP
```

Datafilling table TMINV

The datafill for Basic Call Processing for table TMINV (trunk module inventory) appears in the following table. Only fields that apply to Basic Call Processing appear in the table. Refer to the data schema section of the *Translations Guide* for a description of the other fields.

Table TMINV contains hardware and software information for each trunk module provisioned in an office.

Basic call processing (continued)

The table identifies the trunk modules that contain test circuits that terminate test pairs connected to RCS lines.

Datafilling table TMINV (Sheet 1 of 2)

Field	Subfield or refinement	Entry	Explanation and action
TMNM		see subfields	Trunk module number. This field contains the subfields TMTYPE and TMNO.
	TMTYPE	TM8, MTM, OAU	Trunk module type. Enter the trunk module type.
	TMNO	0-2047, or 0-255, or 0	Trunk module number. Enter the trunk module number. The range for TM8 is 0-2047. The range for MTM is 0-255. For OAU, enter 0.
FRTYPE		TME	Frame type.
FRNO		0-511	Frame number. Enter the frame number of the TME frame.
SHPOS		04, 18,32,51, 65, for TM8, or 65 for MTM, or 51 for OAU	Shelf position. Enter the base mounting position of the trunk module. For TM8, the range is 04, 18, 32, 51, or 65. For MTM, enter 65. For OAU, enter 51.
FLOOR		0-99	Floor. Enter the floor number of the location of the trunk module.
ROW		A-H, J-N, P-Z, AA-HH, JJ-NN, and PP-ZZ	Row: Enter the row number of the location of the trunk module .
FRPOS		0-99	Frame position. Enter the bay position of the TME frame.
LKDATA		see subfields	C-side link data. For switches that have the old JNET this field contains subfields NMPAIR and NMPORT. For switches equipped with the new ENET, subfields ENPAIR, ENSLOT, and ENLINK make up this field.
	NMPAIR	0-31	Network module pair number. Enter the network module number assigned to the trunk module.

Datafilling table TMINV (Sheet 2 of 2)

Field	Subfield or refinement	Entry	Explanation and action
LKDATA (continued)	NMPORT	0-63	Network port number. Enter the network module port number assigned to the trunk module.
	ENPAIR	0-3	ENET pair number. Enter the network pair number of the location of the peripheral module.
	ENSLOT	9-32	ENET slot number. Enter the crosspoint slot number of the location of the peripheral module.
	ENLINK	0-15	ENET link number. Enter the link on the crosspoint of the location of the peripheral module.
EQPEC		alphanumeric	Equipment product engineering code. Enter the product engineering code of the trunk module.
LOAD		alphanumeric	Load. Enter the issue name of the peripheral module software.
EXECS		alphanumeric	Executive programs. Enter the set of executive programs required for the trunk module.

Datafill example for table TMINV

Sample datafill for table TMINV appears in the following example. The second and third tuples identify the maintenance trunk modules (MTM) in the metallic test access (MTA) configuration example. This example appears in the following figure.

MAP example for table TMINV

```
TABLE:  TMINV

 TMNM  FRTYPE FRNO SHPOS FLOOR ROW FRPOS LKDATA EQPEC LOAD EXECS

_____________________________________________________________

 TM8 0 TME     1    18     0    L   16 0 53 2X52AB BTMKA02 TM8EX
 MTM 0 TME     0    65     0    L   16 0 53 2X52AC MTMKAO2 MTMEX
 MTM 1 TME     1    65     0    L   20 0 55 2X52AC MTMKAO2 MTMEX
 OAU 0 TME     0    51     0    L   20 1 55 2X52AC MTMKA02 OAUEX
```

Datafilling table TRKGRP

The datafill for Basic Call Processing for table TRKGRP (trunk group) appears in the following table. Only fields that apply to Basic Call Processing

Basic call processing (continued)

appear in the table. Table TRKGRP contains user-defined data associated with each trunk group that is present in the switching unit.

Each trunk group entry in table TRKGRP contains a different common language location identifier (CLLI) for the trunk group. The entry also consists of a number of other fields determined by the trunk group type (field GRPTYP). The trunk group type that applies to the SMS-RCS is the maintenance and test trunk group (MAINT).

This table identifies the test circuits associated with the maintenance and test trunks. An example of a test trunk is the NT2X90AD test trunk used in mechanized loop testing. Refer to the data schema section of the *Translations Guide* for a description of the other fields.

Datafilling table TRKGRP (Sheet 1 of 2)

Field	Subfield or refinement	Entry	Explanation and action
GRPKEY	CLLI	alphanumeric	Group key. This field contains the subfield CLLI. Enter the CLLI code for the trunk group assigned in table CLLI.
GRPINFO		see subfields	Variable group data. When the trunk group type is MAINT, this field contains subfields GRPTYP, TRAFSNO, PADGRP, NCCLS, and CARD.
	GRPTYP	see list	Group type. Enter the group type for the trunk group. For maintenance and test trunks, the range is ITL2, TTL2, LOOPA, MAINT, or SOCKT.
	TRAFSNO	0	Traffic separation number. Because this number is not required for maintenance and test trunks, enter 0.
	PADGRP	IAO	Pad group. Enter the name of the pad group assigned to the trunk group in table PADDATA. For maintenance and test trunks, enter IAO (intra-office trunks).

Note 1: Table TRKGRP can have a maximum of 2047 trunk groups. The number of CLLIs available to name the trunk groups restricts the accurate number.

Note 2: The set of trunk group types available for an office is a function of the hardware and software features and feature packages. The operating company provides these packages for the office.

Datafilling table TRKGRP (Sheet 2 of 2)

Field	Subfield or refinement	Entry	Explanation and action
	NCCLS	NCRT	No circuit class. Enter NCRT (no circuit).
	CARD	alphanumeric	Card code. Enter the product engineering code of the maintenance and test trunk.
Note 1: Table TRKGRP can have a maximum of 2047 trunk groups. The number of CLLIs available to name the trunk groups restricts the accurate number. ***Note 2:*** The set of trunk group types available for an office is a function of the hardware and software features and feature packages. The operating company provides these packages for the office.			

Datafill example for table TRKGRP

Sample datafill for table TRKGRP appears in the following example.

MAP example for table TRKGRP

```
TABLE:  TRKGRP

GRPKEY
                                        GRPINFO

_____________________________________________________________________

  TTT
                  MAINT    0    IAO    NCRT     2X96AA
  MJACK
                  MAINT    0    IAO    NCRT     1X54AA
  HSET
                  MAINT    0    IAO    NCRT     2X88AA
  LTU
                  MAINT    0    IAO    NCRT     2X11AA
  MONTALK
                  MAINT    0    IAO    NCRT     2X90AB
```

Datafilling table TRKSGRP

Table TRKSGRP (trunk subgroup) lists the auxiliary information for each subgroup. The subgroups are assigned to one of the trunk groups listed in the table TRKGRP.

Basic call processing (continued)

Specify input data for a minimum of one subgroup or a maximum of two subgroups for each trunk group listed in table TRKGRP. The input data excludes trunk groups defined as maintenance (MAINT) group types.

Note: The trunk group datafill automatically produces the trunk subgroup data for maintenance and test trunks. The test trunks exclude subgroup 1 of trunk group with code TTU.

The datafill for Basic Call Processing for table TRKSGRP appears in the following table. Only fields that apply to Basic Call Processing appear in the table. Refer to the data schema section of the *Translations Guide* for a description of the other fields.

Datafilling table TRKSGRP (Sheet 1 of 3)

Field	Subfield or refinement	Entry	Explanation and action
SGRPKEY		see subfields	Subgroup key. This field contains subfields CLLI and SGRP.
	CLLI	alphanumeric	Common language location identifier. This subfield contains the code assigned in table CLLI to the trunk group to which the subgroup belongs.
	SGRP	0 or 1	Subgroup number. This subfield contains the number assigned to the trunk subgroup. For maintenance and test trunks, the number is 0.
CARDCODE		alphanumeric	Card code. This field contains the product engineering code of the maintenance and test trunk.

Note 1: If code is TERM102T, fields OPULSTYP and OSTARTSG are equal to MF and WK in the sequence given.

Note 2: The SIZE field in table DATASIZE for the entry with field DATSKEY equal to TRKSGRP allocates memory for the number of trunk subgroups.

Note 3: Twice the number of trunk groups equals the number of trunk subgroups.

Note 4: The maximum number of trunk subgroups that can be assigned is 4096.

Datafilling table TRKSGRP (Sheet 2 of 3)

Field	Subfield or refinement	Entry	Explanation and action
SGRPVAR		see subfields	Variable subgroup data. For standard signaling, this field contains the following subfields: • SIGDATA • DIR • OPULSTYP • OSTARTSG • IDGTIME • NUMSTOPS • CCONT • RNGBCK • ESUPR • SAT • REMBSY • DIALMODE • TRKGDTIM
	SIGDATA	STD	Signaling data. The signaling code STD for standard signaling appears in this subfield.
	DIR	OG	Direction. For maintenance and test trunks, the entry is OG (outgoing).
	OPULSTYP (see Note 1)	NP	Outgoing type of pulsing. For maintenance and test trunks, the entry is NP (no pulsing).

Note 1: If code is TERM102T, fields OPULSTYP and OSTARTSG are equal to MF and WK in the sequence given.

Note 2: The SIZE field in table DATASIZE for the entry with field DATSKEY equal to TRKSGRP allocates memory for the number of trunk subgroups.

Note 3: Twice the number of trunk groups equals the number of trunk subgroups.

Note 4: The maximum number of trunk subgroups that can be assigned is 4096.

Basic call processing (continued)

Datafilling table TRKSGRP (Sheet 3 of 3)

Field	Subfield or refinement	Entry	Explanation and action
SGRPVAR (continued)	OSTARTSG (see Note 1)	WK	Outgoing start dial signal. For maintenance and test trunks, the entry is WK (wink). ***Note:*** If code is SOCKT, field OSTARTSG is equal to IM.
	IDGTIME	2	Interdigital timing. For maintenance and test trunks, the value is 2.
	NUMSTOPS	0	Number of stop/goes. For maintenance and test trunks, the value is 0.
	CCONT	MW	Coin control. For maintenance and test trunks, the entry is MW (multiwink).
	RNGBCK	IB	Ringback. For maintenance and test trunks, the entry is inband (IB).
	ESUPR	N	Echo suppressor. For maintenance and test trunks, the entry is no echo suppressor (N).
	SAT	N	Satellite. For maintenance and test trunks, the entry is no satellite (N).
	REMBSY	N	Remote make busy. For maintenance and test trunks, the entry is feature not assigned (N).
	DIALMODE		Dial mode. For maintenance and test trunks, this subfield is blank.
	TRKGDTIM	16	Trunk guard timing. For maintenance and test trunks, this value is 16. There is 160 ms elapsed time interval before the trunk is returned to the idle link list after trunk disconnect.

Note 1: If code is TERM102T, fields OPULSTYP and OSTARTSG are equal to MF and WK in the sequence given.

Note 2: The SIZE field in table DATASIZE for the entry with field DATSKEY equal to TRKSGRP allocates memory for the number of trunk subgroups.

Note 3: Twice the number of trunk groups equals the number of trunk subgroups.

Note 4: The maximum number of trunk subgroups that can be assigned is 4096.

Datafill example for table TRKSGRP

Sample datafill for table TRKSGRP appears in the following example.

MAP example for table TRKSGRP

```
TABLE: TRKSGRP

    SGRPKEY  CARDCODE

SGRPVAR

_____________________________________________________________________

  LTU 0       2X11AA
    STD     OG    NP     WK   0 0 NO   NO F N N  17   UNEQ
  MONTALK 0   2X90AD
    STD     OG    NP     WK   0 0 NO   NO F N N  17   UNEQ
  TTU 0       2X47AC
    STD     OG    NP     WK   0 0 NO   NO F N N  17   UNEQ
```

Datafilling table TRKMEM

Table TRKMEM (trunk member) contains the data associated with each trunk assigned to one of the trunk groups and subgroups. Tables TRKGRP and TRKSGRP specify the groups and subgroups.

This table identifies the circuits associated with the test equipment that tests lines and trunks.

The datafill for Basic Call Processing for table TRKMEM appears in the following table. Only fields that apply to Basic Call Processing appear in the

Basic call processing (continued)

table. Refer to the data schema section of the *Translations Guide* for a description of the other fields.

Datafilling table TRKMEM

Field	Subfield or refinement	Entry	Explanation and action
CLLI		alphanumeric	Common language location identifier. Enter the code assigned in table CLLI for the trunk group to which the trunk is a member.
EXTRKNM		0-9999	External trunk number. Enter the external trunk number assigned to the trunk.
SGRP		0	Subgroup number. Enter the subgroup number where the trunk is. Enter 0 for maintenance and test trunks.
MEMVAR		see subfields	Variable data for members. For SMS-RCS applications, subfields PMTYPE, TMNO, and TMCKTNO contains this field.
	PMTYPE	MTM,OAAU, orTM8	Peripheral module type. Enter the peripheral module type where the trunk is.
	TMNO	0-2047	Trunk module number. Enter the number assigned to the trunk module for which the trunk group member is assigned.
	TMCKTNO	0-29	Trunk module circuit number. Enter the trunk module circuit number to which the trunk group member is assigned.

Note 1: Memory is allocated for the total number of trunks specified in field TRKGRSIZ in table CLLI for the appropriate trunk groups.

Note 2: To increase table size with data present, change field TRKGRSIZ in table CLLI for the appropriate trunk groups.

Datafill example for table TRKMEM

Sample datafill for table TRKMEM appears in the following example. The first tuple identifies the line test unit (LTU) that appears in the example metallic test access (MTA) configuration. The MTA configuration appears in the following figure.

MAP example for table TRKMEM

```
TABLE:  TRKMEM

           CLLI    EXTRKNM    SGRP                          MEMVAR

_____________________________________________________________________

            LTU        0       0                       MTM   0 22
            LTU        1       0                       MTM   2  2
            TTT        0       0                       OAU   0 18
            HSET       0       0                       TM8   0  4
```

Datafilling table ALMSCGRP

Table ALMSCGRP (alarm scan group) records the circuit equipment, location, and type of card. Table ALMSCGRP is a head table for the correct scan points.

Before you assign a scan group to this table, verify the group was not assigned to one of the following:

- table SCGRP (scan group)
- table NWMSC (network management scan)
- table NTMSCPT (network management scan)

The datafill for Basic Call Processing for table ALMSCGRP appears in the following table. Only fields that apply to Basic Call Processing appear in the table. Refer to the data schema section of the *Translations Guide* for a description of the other fields.

Datafilling table ALMSCGRP (Sheet 1 of 2)

Field	Subfield or refinement	Entry	Explanation and action
SCGROUP		0 to 255	Scan group. Enter the scan group number.
TMTYPE		MTM, OAU, or RSM	Trunk module type. Enter the type of trunk module of the location of the circuit.
TMNO		see list	Trunk module number. Enter the number of the trunk module of the location of the circuit. Where TMTYPE is OAU, the entry is equal to 0. Where TMTYPE is MTM, the entry can be in the range of 0-255. Where TMTYPE is RSM, the entry can be in the range of 0-99.

Basic call processing (continued)

Datafilling table ALMSCGRP (Sheet 2 of 2)

Field	Subfield or refinement	Entry	Explanation and action
TMCKTNO			Trunk module circuit number. Enter the trunk module circuit number of the location of the circuit.
CARDCODE			Product engineering code. Enter the product engineering code of the alarm card.

Datafill example for table ALMSCGRP

Sample datafill for table ALMSCGRP appears in the following example.

MAP example for table ALMSCGRP

```
TABLE:  ALMSCGRP

            SC          TM          TM          TM          CARD
            GROUP       TYPE        NO          CKTNO       CODE
_____________________________________________________________________

             0          MTM         0           1           3X82AA
             1          MTM         4           1           3X82AA
             2          MTM         0           5           3X83AA
             3          MTM         0           7           3X85AA
             4          MTM         0           8           0X10AA
             5          MTM         0           9           0X10AA
```

Datafilling table ALMSDGRP

Table ALMSDGRP (alarm signal distribution group) records the circuit equipment, location, and type of card. Table ALMSDGRP serves as a head table for the correct signal distribution points.

Before you assign a signal distribution group to this table, verify the group was not assigned to one of the following:

- table SDGRP
- table NWMSD
- table NWMSD.NWMSDPT

The datafill for Basic Call Processing for table ALMSDGRP appears in the following table. Only fields that apply to Basic Call Processing appear in the

table. Refer to the data schema section of the *Translations Guide* for a description of the other fields.

Datafilling table ALMSDGRP

Field	Subfield or refinement	Entry	Explanation and action
SDGROUP		0 to 255	Signal distribution group. Enter the signal distribution group number.
TMTYPE		MTM, OAU, RSM	Trunk module type. Enter the type of trunk module of the location of the circuit.
TMNO		0 to 2047	Trunk module number. Enter the number of the trunk module of the location of the circuit. Where TMTYPE is OAU, the entry is equal to 0. Where TMTYPE is MTM, the entry can be in the range of 0-255. Where TMTYPE is RSM, the entry can be in the range of 0-99.
TMCKTNO		0 to 29	Trunk module circuit number. Enter the trunk module circuit number of the location of the circuit.
CARDCODE		see list	Product engineering code. Enter the product engineering code (PEC) of the alarm card. The following cards are examples of the PEC: • 3X82AA • 3X82AB • 3X82AC • 3X82AD • 3X83AA • 3X84AA • 3X85AA • 2X57AA

Datafill example for table ALMSDGRP

Sample datafill for table ALMSDGRP appears in the following example.

Basic call processing (continued)

MAP example for table ALMSDGRP

```
TABLE:  ALMSDGRP

  SD              TM          TM          TM              CARD
  GROUP           TYPE        NO          CKTNO           CODE

_____________________________________________________________

   0             MTM          0            1            3X82AB
  1              MTM          4            1            3X82AB
  2              MTM          0            5            3X84AA
  3              MTM          0            7            2X57AA
  4              MTM          0            8            2X57AA
```

Datafilling table ALMSD

Table ALMSD (alarm signal distribution point) identifies the function that each assigned signal distribution point in the alarm signal distribution groups performs.

The table that points in to table ALMSD is table ALMSDGRP.

The datafill for Basic Call Processing for table ALMSD appears in the following table. Only fields that apply to Basic Call Processing appear in the table. Refer to the data schema section of the *Translations Guide* for a description of the other fields.

Datafilling table ALMSD (Sheet 1 of 2)

Field	Subfield or refinement	Entry	Explanation and action
FUNCTION		alphanumeric	Function. Enter the alarm function.
SDGROUP		0 to 255	Signal distribution group. Enter the signal distribution group number where the signal distribution point belongs.
POINT		0 to 7	Signal distribution point. Enter the signal distribution point number in the signal distribution group.
NORMALST		0 to 1	Normal state. Enter the normal state of the signal distribution point. Enter 0 if the signal distributor point is normally OFF or OPEN. Enter 1 if the signal distributor point is normally ON or CLOSED.

Datafilling table ALMSD (Sheet 2 of 2)

Field	Subfield or refinement	Entry	Explanation and action
AUDIBLE		Y or N	Audible. Enter Y (yes) if the signal distribution point is to reset when the audible alarm reset key operates. If this action does not occur, enter N (no).
LAMPTEST		Y or N	Lamp test. Enter Y if the signal distribution point is to be in the lamp test. If this action does not occur, enter N.

Datafill example for table ALMSD

Sample datafill for table ALMSD appears in the following example.

MAP example for table ALMSD

```
TABLE:  ALMSD

FUNCTION      SDGROUP      POINT      NORMALST      AUDIBLE      LAMPTEST

_____________________________________________________________________

OAUFAIL         0           0          1             N            N
OAUPWR          0           1          1             N            N
ABOAU           0           4          0             N            Y
COMAUD1         0           5          0             Y            N
MTMFAIL         1           0          1             N            N
```

Datafilling table ALMSC

Table ALMSC (alarm scan) identifies the function that each assigned scan point in the alarm scan groups performs.

The table that points into ALMSC is table ALMSCGRP (alarm scan group).

The datafill for Basic Call Processing for table ALMSC appears in the following table. Only fields that apply to Basic Call Processing appear in the table.

Basic call processing (continued)

Refer to the data schema section of the *Translations Guide* for a description of the other fields.

Datafilling table ALMSC (Sheet 1 of 2)

Field	Subfield or refinement	Entry	Explanation and action
FUNCTION		alphanumeric	Function. Enter the alarm function.
SCGROUP		0 to 255	Scan group. Enter the scan group number where the scan point belongs.
POINT		0 to 6	Scan point. Enter the scan point number in the scan group.
NORMALST		0 to 1	Normal state. Enter the normal state of the scan point. Enter 0 if the scan point is normally OFF or OPEN. Enter 1 if the scan point is normally ON or CLOSED.
REPORT		Y or N	Report. Enter Y if an alarm report is to be logged. If this event does not occur, the entry is N.
ALM		CR, MJ, MN, or NA	Alarm. Enter one of the following types of alarms to be active: • critical alarm (CR) • major alarm (MJ) • minor alarm (MN) • no alarm (NA)
LOGIC		see subfield	Logic. This field consists of the following subfields: • LOGIC • SDFUNCT • ALMGRP • ALMXFR • CONTMARK
	LOGIC	Y or N	Logic. Enter Y if the logic associated with the function is fixed. For other conditions, enter N.
	SDFUNCT	alphanumeric	Signal distribution function. Enter the signal distribution function or functions associated with a specified scan point.

Datafilling table ALMSC (Sheet 2 of 2)

Field	Subfield or refinement	Entry	Explanation and action
	ALMGRP	Y or N	Alarm grouping. Enter Y if the alarm function is to occur when the alarm Grouping key is active. Enter N if the alarm function is to occur at all times. The alarm grouping key does not affect this condition.
	ALMXFR	Y or N	Alarm transfer. Enter Y if the alarm function is to occur when the alarm transfer key is active. If this event does not occur, enter N.
	CONTMARK	+ or $	Continuation mark. Where the record is any other than the last for a specified scan point enter a plus sign (+). This sign indicates that additional data for the scan point is specified in the next record. Where the record is the last for a specified scan point, enter a dollar sign ($).

Datafill example for table ALMSC

Sample datafill for table ALMSC appears in the following example.

MAP example for table ALMSC

```
TABLE:  ALMSC

                          N                                          C
                S         O                                          O
                C         R    R                         A    A     N
                G    P    M    E         L               L    L     T
                R    O    A    P         O               M    M     M
                O    I    L    O         G               G    X     A
                U    N    S    R         I               R    F     R
 FUNCTION       P    T    T    T   ALM   C   SDFUNCT     P    R     K

 ____________________________________________________________________

 ABMTMFL        0    0    0    Y    MN   N   ABOAU       N    N     +
 AUDARO         0    1    0    Y    NA   Y   COMAUD1     N    N     +
 ABOAUFL        1    0    0    Y    MJ   Y   MJVISLOOP   N    N     $
 AUDARM         1    1    0    Y    NA   Y
```

Basic call processing (continued)

Datafilling table SCGRP

Table SCGRP (scan group) lists the PEC and the location at the host or remote switching units. The PEC and location are for the scan groups reserved for use as scan points for line features.

The locations of the scan groups assigned for line features cannot be assigned to alarm or network management scan groups.

The datafill for Basic Call Processing for table SCGRP appears in the following table. Only fields that apply to Basic Call Processing appear in the table. Refer to the data schema section of the *Translations Guide* for a description of the other fields.

Datafilling table SCGRP

Field	Subfield or refinement	Entry	Explanation and action
SCGRPNO		0 to 511	Scan group. Enter the scan group number.
TMTYPE		MTM, RMM, or RSM	Trunk module type. Enter the type of trunk module of the location of the miscellaneous scan card. The types of trunk module are MTM, remote maintenance module (RMM), or remote service module (RSM).
TMNO		0 to 255	Trunk module number. Enter the number assigned to the MTM, RMM, or RSM of the location of the miscellaneous scan card.
TMCKTNO		0 to 23	Trunk module circuit number. Enter the trunk module circuit number on the MTM, RMM, or RSM of the location of the scan group.
CARDCODE		0X10AA	Trunk module circuit number. Enter the trunk module circuit number on the MTM, RMM, or RSM of the location of the scan group.

Datafill example for table SCGRP

Sample datafill for table SCGRP appears in the following example.

MAP example for table SCGRP

```
TABLE:  SCGRP

  SCGRPNO        TMTYPE        TMNO        TMCKTNO        CARDCODE

_____________________________________________________________________

    0             MTM           1           14            0X10AA
    1             MTM           1           15            0X10AA
    2             RSM           0           12            0X10AA
    3             RSM           0           13            0X10AA
```

Datafilling table SDGRP

Table SDGRP (signal distribution group) contains the PEC and the location at the host or remote switching units. The PEC and location are for the signal distributor groups reserved for use as signal distribution points for line features.

The locations of the signal distribution groups assigned for line features cannot be assigned to alarm or network management signal distributor groups.

Note: Table SDGRP is required datafill for setting up mechanized loop testing of RCS subscriber lines. This table defines the SD groups for mechanized loop tests.

The datafill for Basic Call Processing for table SDGRP appears in the following table. Only fields that apply to Basic Call Processing appear in the table. Refer to the data schema section of the *Translations Guide* for a description of the other fields.

Datafilling table SDGRP (Sheet 1 of 2)

Field	Subfield or refinement	Entry	Explanation and action
SDGRPNO		0 to 511	Signal distribution group. Enter the signal distribution group number.
TMTYPE		MTM, RMM, or RSM	Trunk module type. Enter the type of trunk module of the location of the signal distributor card.
TMNO		0 to 2047	Trunk module number. Enter the number assigned to the MTM, RMM, or RSM of the location of the signal distribution card.

Basic call processing (continued)

Datafilling table SDGRP (Sheet 2 of 2)

Field	Subfield or refinement	Entry	Explanation and action
TMCKTNO		0 to 29	Trunk module circuit number. Enter the trunk module circuit number on the MTM, RMM, or RSM of the location of the signal distributor group.
CARDCODE		2X57AA	Product engineering code. Enter the PEC of the signal distribution card.

Datafill example for table SDGRP

Sample datafill for table SDGRP appears in the following example.

MAP example for table SDGRP

```
TABLE:  SDGRP

  SDGRPNO        TMTYPE        TMNO        TMCKTNO        CARDCODE

_____________________________________________________________________

    0             MTM           0           14           2X57AA
    1             MTM           0           15           2X57AA
    2             RSM           0           14           2X57AA
    3             RSM           0           15           2X57AA
```

Datafilling table LNINV

Table LNINV (line circuit inventory) holds an inventory of subscriber lines and associated line cards for RCS modules.

To accommodate the RCS lines, table LNINV and the CKTLOC (circuit locate) command are changed. The line equipment number (LEN) format is not changed.

Enter the RCS lines in table LNINV. All fields do not change for RCS lines, except the CARDCODE field. The following card codes increase the range of values for this field:

- SCD203: (for single-party lines)
- SCD221: (for multiparty lines)
- SCD233: (for coin lines)

- SCD271: (for SPOTS card used as single-party POTS card)
- SCDFSR: (for frequency selective ringing)

LEN format

The LEN format corresponds directly to the characteristics of line modules. The line modules have 20 drawers with 32 line circuits for each drawer. Two line modules are present for a frame (double-bay line module).

With an RCS, the LEN format does not change, but some field ranges change. A logical (software-related) to physical mapping of LEN to physical location is used. This mapping allows the use of current administration forms and software entries.

The LEN format contains site, frame, unit, drawer, and circuit. The LEN represents administration software entries only. Analog physical line interface circuits are not a requirement.

- *Site*: Four alphanumeric characters identify Site. Site describes the location of peripherals. The locations are inside (host) or outside (remote site name) the central office.
- *Frame*: Frame is a logical unit that has values 0 through 99. Frame associates with one or more RCS modules.
- *Unit*: Unit, which refers to an RCS, has a value 0 through 9. A maximum of ten RCS units can be allocated to the same logical frame.
- *Drawer*: Drawer has a value 0 through 3. Drawer refers to one of the four RCS shelves. Each RCS shelf contains 12 line cards connecting to 1 or 2 subscriber lines.
- *Circuit*: Circuit, which refers to the line circuit number in the line card, has a value 0 through 23. Single-circuit line cards use even-numbered circuits.

Refer to the following figures for logical (software-associated) to physical mapping of RCS LEN numbers.

Basic call processing (continued)

Physical location of RCS line circuits

Shelf	Slot 1	2	3	4	5	6	7	8	9	10	11	12	13	14	15	16
D					73	75	77	79	81	83	85	87	89	91	93	95
					74	76	78	80	82	84	86	88	90	92	94	96
C					49	51	53	55	57	59	61	63	65	67	69	71
					50	52	54	56	58	60	62	64	66	68	70	72
B					25	27	29	31	33	35	37	39	41	43	45	47
					26	28	30	32	34	36	38	40	42	44	46	48
A					1	3	5	7	9	11	13	15	17	19	21	23
					2	4	6	8	10	12	14	16	18	20	22	24

Software mapping of RCS line circuits

Drawer	Slot 5	6	7	8	9	10	11	12	13	14	15	16
3	0	2	4	6	8	10	12	14	16	18	20	22
	1	3	5	7	9	11	13	15	17	19	21	23
2	0	2	4	6	8	10	12	14	16	18	20	22
	1	3	5	7	9	11	13	15	17	19	21	23
1	0	2	4	6	8	10	12	14	16	18	20	22
	1	3	5	7	9	11	13	15	17	19	21	23
0	0	2	4	6	8	10	12	14	16	18	20	22
	1	3	5	7	9	11	13	15	17	19	21	23

The CKTLOC command helps operating company personnel locate the shelf slot of a line. This command is available at the line test position (LTP) level of the MAP terminal.

When operating company personnel issue the CKTLOC command, the MAP display shows the LEN for that circuit. An example of the CKTLOC command is the CKTLOC 18. The shelf that corresponds to the drawer and the slot and PEC of the line card appears on the MAP.

Physical and logical mapping of line circuits

For line modules, line cards are present in a one-to-one relationship with circuit numbers. Every line circuit associates with one line card. For the RCS, this relationship is different. The RCS line cards contain one *or* two line circuits.

If the line card is for coin lines, the card has one line circuit. If the card is a single-party or multiparty line card, the card has two line circuits. Single-circuit line cards use even-numbered circuit values, as assigned in the LEN. The subscriber lines associated with these circuits can be assigned to odd-numbered or even-numbered DS-1 channels.

Coin line cards have a restriction. In Mode 2, coin line cards can be provisioned only in the four right slots on each shelf.

The logical and physical mapping of line circuits appear in the previous figures.

In the Physical location figure, line circuits are numbered 1 to 96. Each box represents a line card. Sixteen slots form a shelf and two shelves, A and B or C and D form a shelf group. The four left slots of all shelves contain common control cards. The other 12 slots on each shelf contain line cards.

The Software mapping figure shows drawers that contain 12 slots. These slots contain line cards that support entered lines. Four slots are not shown. These slots correspond to the slots that hold common control cards. The last eight lines of each drawer are entered as unequipped. In this way, drawers look like shelves.

The software-to-physical line circuit relationship appears in the following examples. Refer to the first figure and the second figure.

- LEN: REM2 00 0 0 23 has a software location of drawer 0, circuit 23. The line card in shelf A, slot 16.
- LEN: REM2 00 0 1 05 has a software location of drawer 1, circuit 5. The line card in shelf B, slot 7.

The RCS lines follow the current LEN format and problems can occur when you try to locate the physical slot of a line. The RCS uses line cards containing one *or* two lines. The CKTLOC command accommodates the difference

Basic call processing (continued)

between logical and physical labeling of shelves and logical and physical labeling of line circuits.

LNINV datafill procedure

The datafill for Basic Call Processing for table LNINV appears in the following table. Only fields that apply to Basic Call Processing appear in the table. Refer to the data schema section of the *Translations Guide* for a description of the other fields.

The command string examples in the following procedure correspond to the configuration that appears. The examples correspond to examples of tuples that appear at the end of the following procedure.

Datafilling table LNINV (Sheet 1 of 4)

Field	Subfield or refinement	Entry	Explanation and action
LEN		see subfield	Line equipment number. This field contains the following subfields: • SITE • FRAME • UNIT • LSG • CIRCUIT
	SITE	alphanumeric	Site. Enter the location of the RCS. This entry is not optional. This entry does not have a default value.
	FRAME	0 to 99	Frame. Enter the remote concentrator module frame number. This number is not a physical frame. This number is a software entity that identifies the RCS modules that share the same metallic test pair. All RCS modules that share the same metallic test pair have the same frame number.
	UNIT	0 to 9	Unit. Enter the remote concentrator module unit number.
	LSG	0 to 3	Line subgroup. Enter the line subgroup of the RCS of the location of the line.
	CIRCUIT	0 to 23	Line card circuit number. Enter the line card circuit number of the line subgroup of the location of the card.

Datafilling table LNINV (Sheet 2 of 4)

Field	Subfield or refinement	Entry	Explanation and action
CARDCODE		see list	Card code. Enter the PEC of the line card. The range of values includes the following: • SCD203 • SCD221 • SCD233 • SCD271 • SCDFSR • NAILUP

Basic call processing (continued)

Datafilling table LNINV (Sheet 3 of 4)

Field	Subfield or refinement	Entry	Explanation and action

			Note 1: An RCS that is set up for frequency selective ringing (FSR) cannot use multi-party cards. You cannot enter an SCD221 card code in table LNINV for line cards on an RCS that has FSR entered. If this condition occurs, the following error message appears:
			
			`SCD221 IS NOT VALID FOR RCS WITH FSR RINGTYPE`
			
			Note 2: Enter data in SCD222 900-W and SCD252 1500-W FSR cards as SCDFSR for frequency selective ringing.
			
			Note 3: Table LNINV does not accept the SCDFSR card code for line cards on an RCS that have S in the RNGTYPE field of table RCSINV. If this condition occurs, the following error message appears:
			
			`SCDFSR IS NOT VALID FOR RCS WITH SUPERIMPOSED RINGTYPE`
			
			Note 4: Single-party or special services can use the SPOTS card. For special services, enter the card as NAILUP. Enter both circuits in the SPOTS card as loop start or ground start. Enter in the GND field Y for both circuits or N for both circuits.
			
			Note 5: Northern Telecom does not recommend that you enter data in SPOTS cards in a Mode 3 RCS. Equipment in Mode 3 multiplexes 48 time slots on to 2 DS-1 lines and expects single-circuit cards. If you enter data in SPOTS cards, you can use only even-numbered circuits for the cards.
			
			Note 6: You can change an SCD233 coin card to an SCD203 POTS card or to an SCD271 SPOTS card. When you perform this action, make sure the even and odd circuits on the same line card have the same card code. Before you change the CARDCODE field, delete the odd circuit. Change the CARDCODE field in the even circuit. Add the odd circuit.

Datafilling table LNINV (Sheet 4 of 4)

Field	Subfield or refinement	Entry	Explanation and action
PADGRP		alphanumeric	Pad group. Enter the name of the pad group assigned to the line circuit in table PADDATA. The range of values includes STDLN, UNBAL, PPHON, RCT, LRLM, and NPDGP.
STATUS		see list	Status. Enter the line inventory availability status. The range of values includes HASU, WORKING, CUTOFF, RESERVED, or UNEQUIPPED.
GND		Y or N	Ground. Where the line is ground start, enter Y. If this condition does not occur, enter N for loop start.
BNV		L or NL	Balanced network value. Enter L when line circuit is configured for a loaded network. If this event does not occur, enter NL for nonloaded network.
MNO		Y or N	Manual override. Enter Y to make sure that the on-hook balance network test does not update field BNV in this table. If this event does not occur, enter N to allow off-hook balance network test to update field BNV in this table.
CARDINFO		default	Card information. The NIL value is the default.

Datafill example for table LNINV

Sample datafill for table LNINV appears in the following example.

MAP example for table LNINV

```
REM1  00  0  00  00  SCD203  STDLN   WORKING    N   NL    N      NIL
REM1  00  0  00  08  SCD271  STDLN   WORKING    Y   NL    N      NIL
REM1  00  0  00  12  SCD221  STDLN   WORKING    N   NL    N      NIL
REM1  00  0  00  16  NAILUP  STDLN      HASU    N   NL    N      NIL
REM1  00  0  00  18  SCD233  STDLN   WORKING    N   NL    N      NIL
REM1  00  1  02  16  NAILUP  STDLN      HASU    N   NL    N      NIL
REM1  00  1  03  16  NAILUP  STDLN   WORKING    N   NL    N      NIL
```

Datafilling table LENLINES

Table LENLINES (line assignment) contains the following data:

- the site name assigned to the remote location
- the party to which the directory number is assigned
- the ringing code assigned to the directory number

Basic call processing (continued)

The datafill for Basic Call Processing for table LENLINES appears in the following table. Only fields that apply to Basic Call Processing appear in the table. Refer to the data schema section of the *Translations Guide* for a description of the other fields.

Datafilling table LENLINES (Sheet 1 of 3)

Field	Subfield or refinement	Entry	Explanation and action
LEN		see subfield	Line equipment number. This field contains the following subfields: • SITE • FRAME • UNIT • LSG • CIRCUIT
	SITE	alphanumeric	Site. Enter the location of the RCS. This entry is not optional. This entry does not have a default value.
	FRAME	0-511	Frame. Enter the remote concentrator module frame number. The number is not a physical frame. The number is a software entity that identifies the RCS modules that share the same metallic test pair. All RCS modules that share the same metallic test pair have the same frame number.
	UNIT	0 to 9	Unit. Enter the remote concentrator module unit number.

Note 1: Parties on the same line cannot have the same ring code. Violation of this rule causes the following error message:

```
PARTIES ON SAME RCS FSR LINE MUST HAVE UNIQUE RINGCODES
NOTE:  RINGCODES 0 AND 1 SELECT THE SAME FREQUENCY BAND
```

Note 2: Line class codes of 8FR and 10FR are not allowed for RCS module FSR lines. An attempt to add more than four parties to an FSR line results in the following error message:

```
MAXIMUM OF 4 PARTIES PER RCS FSR LINE
```

Note 3: Do not enter data in lines with the special-service card code NAILUP in table LENLINES.

Note 4: Make changes to fields with multiple entries in the PROMPT mode only.

Datafilling table LENLINES (Sheet 2 of 3)

Field	Subfield or refinement	Entry	Explanation and action
	LSG	0 to 3	Line subgroup. Enter the line subgroup of the RCS where the line is.
	CIRCUIT	0 to 23	Line card circuit number. Enter the line card circuit number of the line subgroup where the card is.
PTY		R1 to R5, T1 to T5, or S	Party and ringing group. The line can be assigned to a two-party, four-party, eight-party, or ten-party line. When this condition occurs, enter the party of the directory number assigned to the line. The range is R1 through R5 and T1 through T5. If the line is assigned to a separate line, enter S for single party.
RINGCODE		0 to 5	Ring code. Enter the ring code assigned to the line. ***Note:*** Four ring codes can be assigned to multiparty FSR lines. If an attempt occurs to assign more codes, the following error message appears: `MAX RINGCODE FOR RCS LINES IS 4` Refer to Note 1 and Note 2.
DN		numeric	Directory number. Enter the directory number assigned to the line.
SIGTYPE		DP or DT	Signal type. Enter the type of pulsing. The types of pulsing are DP (dial pulse) or DT (Digitone).

Note 1: Parties on the same line cannot have the same ring code. Violation of this rule causes the following error message:

```
PARTIES ON SAME RCS FSR LINE MUST HAVE UNIQUE RINGCODES
NOTE:  RINGCODES 0 AND 1 SELECT THE SAME FREQUENCY BAND
```

Note 2: Line class codes of 8FR and 10FR are not allowed for RCS module FSR lines. An attempt to add more than four parties to an FSR line results in the following error message:

```
MAXIMUM OF 4 PARTIES PER RCS FSR LINE
```

Note 3: Do not enter data in lines with the special-service card code NAILUP in table LENLINES.

Note 4: Make changes to fields with multiple entries in the PROMPT mode only.

Basic call processing (continued)

Datafilling table LENLINES (Sheet 3 of 3)

Field	Subfield or refinement	Entry	Explanation and action
LNATTIDX		0 to 1023	Line attribute index. Enter the index into table LINEATTR.
OPTLIST		alphanumeric	Option list. Enter a list of a maximum of 20 basic options assigned to the directory number (DN). A blank must separate each three-character option. Enter data that is not correct to display the list of available options. ***Note:*** Four-party and eight-party lines require the ONI line option.
CONTMARK		+ or $	Continuation mark. Enter a plus sign (+) when additional data for the LEN is specified on the next record. If this event does nor occur, enter a dollar sign ($) after the last record for the LEN.

Note 1: Parties on the same line cannot have the same ring code. Violation of this rule causes the following error message:

```
PARTIES ON SAME RCS FSR LINE MUST HAVE UNIQUE RINGCODES
NOTE:  RINGCODES 0 AND 1 SELECT THE SAME FREQUENCY BAND
```

Note 2: Line class codes of 8FR and 10FR are not allowed for RCS module FSR lines. An attempt to add more than four parties to an FSR line results in the following error message:

```
MAXIMUM OF 4 PARTIES PER RCS FSR LINE
```

Note 3: Do not enter data in lines with the special-service card code NAILUP in table LENLINES.

Note 4: Make changes to fields with multiple entries in the PROMPT mode only.

Datafill example for table LENLINES

Sample datafill for table LENLINES appear in the following example.

MAP example for table LENLINES

```
TABLE:  LENLINES

      LEN              PTY  RINGCODE  DN         SIGTYPE    LNATTIDX
                                                             OPTLIST


REM1  00  0  00  00    S    0       5340000       DT          0 $
REM1  00  0  00  08    S    0       5340080       DT          0 $
REM1  00  0  00  12   R1    0       5340121       DT         10 $
REM1  00  0  00  12   T1    0       5340120       DT         10 $
REM1  00  0  00  18    S    0       5340180       DT          9 $
```

Datafilling table LENFEAT

The datafill for Basic Call Processing for table LENFEAT appears in the following table. Only fields that apply to Basic Call Processing appear in the table. Refer to the data schema section of the *Translations Guide* for a description of the other fields.

Memory is allocated dynamically for this table.

Datafilling table LENFEAT (Sheet 1 of 2)

Field	Subfield or refinement	Entry	Explanation and action
LEN		see subfield	Line equipment number. This field contains the following subfields: • SITE • FRAME • UNIT • LSG • CIRCUIT
	SITE	alphanumeric	Site. Enter the location of the RCS. This entry is not optional. This entry does not have a default value.

Basic call processing (continued)

Datafilling table LENFEAT (Sheet 2 of 2)

Field	Subfield or refinement	Entry	Explanation and action
LEN (continued)	FRAME	0 to 99	Frame. Enter the remote concentrator module frame number. This number is not a physical frame. This number is a software entity that identifies the RCS modules that shares the same metallic test pair. All RCS modules that share the same metallic test pair have the same frame number.
	UNIT	0 to 9	Unit. Enter the remote concentrator module unit number.
	LSG	0 to 3	Line subgroup. Enter the line subgroup of the RCS where the line is.
	CIRCUIT	0 to 23	Line card circuit number. Enter the line card circuit number of the line subgroup of the location of the card.
PTY		R1 to R5, T1 to T5, or S	Party and ringing group. The line can be assigned to a two-party, four-party, eight-party, or ten-party line. When this condition occurs, enter the party of the directory number assigned to the line. The range is R1 through R5 and T1 through T5. If the line is assigned to an separate line, enter S for single party.
DF		see list	Data feature. Enter the data feature code to be assigned to the line. The range of values includes CLI (calling line identification), SDN (secondary directory number), and SLU (subscriber line usage). For a complete list of features, refer to the data schema section of the *Translations Guide*.
DATA		SLU, CLI, SDN	Data. This field comprises subfields that depend on the data feature code in field DF.

Datafill example for table LENFEAT

Sample datafill for table LENFEAT appears in the following example.

MAP example for table LENFEAT

```
TABLE:   LENFEAT

                 LEN       PTY        DF                    DATA
_____________________________________________________________________

REM1  00  0  00  00        S       SLU
                                                             SLU
```

Datafilling table MTAMDRVE

The metallic test access (MTA) network is a matrix of vertical and horizontal crosspoints. The MTA network is like a minibar, that connects verticals to horizontals in the network. The MTA connects test equipment to a circuit that requires testing. The MTA connects a horizontal to a vertical.

The interconnection of a number of smaller minibar circuits allows the construction of an MTA network of the required size. These circuits are building block components. These circuits appear in the following figure.

The system uses the NT3X09AA Remote Metallic Test Access driver to allow metallic test access to remote line concentrating devices. These devices include the RCS. The NT3X09AA is a circuit that is four vertical by eight horizontal. The NT3X09BA 8 X 8 Metallic Test Access is a circuit that is eight vertical by eight horizontal.

Basic call processing (continued)

MTA matrix

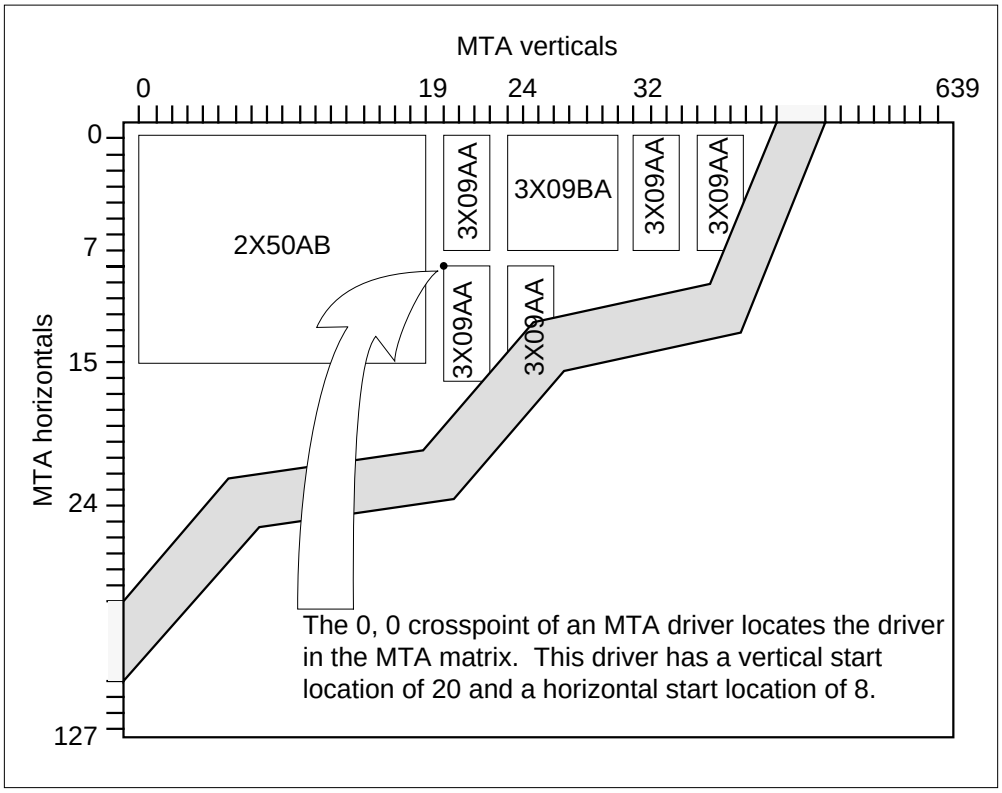

Table MTAMDRVE (metallic test access minibar driver) specifies the location and the type of the minibar driver assigned to the minibar switch. The NT2X50AB Minibar driver is part of the NT2X46 Minibar Switch Assembly. The NT3X09 driver has relays on the card. The NT3X09 driver does not require an associated minibar switch. Identify each minibar driver by the 0, 0 crosspoint in the matrix.

Example MTA configuration

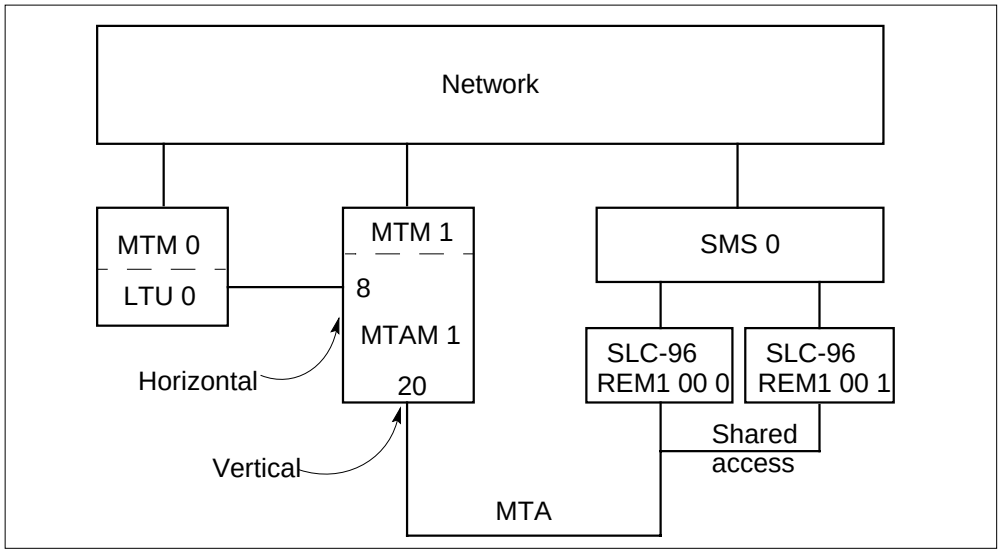

MTAMDRVE datafill procedure

The datafill for Basic Call Processing for table MTAMDRVE appears in the following table. The fields that apply directly to Basic Call Processing appear. Refer to the data design section of the *Translations Guide* for a description of the other fields.

The command string examples appear in the procedure. The command string examples correspond to the example MTA configuration that appears in the previous figure. The command string examples correspond to examples of tuples that appear at the end of this procedure.

Datafilling table MTAMDRVE (Sheet 1 of 2)

Field	Subfield or refinement	Entry	Explanation and action
MTAMEM		0 to 255	Metallic test access minibar driver member. Enter the MTA driver member number. This number is the key to the table.
VERT		0 to 639	The MTAM driver vertical start location. Enter the vertical start location for the MTAM driver. The range is 0-639.
HORIZ		0 to 127	The MTAM driver horizontal start location. Enter the horizontal start location for the MTAM driver.

Basic call processing (continued)

Datafilling table MTAMDRVE (Sheet 2 of 2)

Field	Subfield or refinement	Entry	Explanation and action
TMTYPE		MTM	Trunk module type. Enter the type of trunk module. The minibar driver mounts to this trunk module. In this event, the module the minibar driver mounts to is MTM.
TMNO		0 to 255	Trunk module number. Enter the number assigned to the maintenance trunk module.
TMCKTNO		0 to 28	Trunk module circuit number. Enter the circuit number of the MTM. The system assigns the minibar driver to this MTM. Enter even numbers in the range.
MTACARD		see list	The MTAM driver card. Enter the card code for the metallic test access minibar driver card. The values are 2X50AB, 3X09AA, and 3X09BA.

Datafill example for table MTAMDRVE

Sample datafill for table MTAMDRVE appears in the following example.

MAP example for table MTAMDRVE

```
TABLE: MTAMDRVE

MTAMEM      VERT HORIZ      TMTYPE   TMNO TMCKTNO    MTACARD
_____________________________________________________________

   1         20    8         MTM      1     10       3X09AA
```

Datafilling table MTAVERT

Table MTAVERT (metallic test access vertical connection) identifies the vertical connectivity to the MTA matrix. The two types of available connections are single and multiple. The SMS-RCS uses the multiple connection because a maximum of 32 RCS modules can share a metallic test pair.

The datafill for Basic Call Processing for table MTAVERT appears in the following table. The fields that apply directly to Basic Call Processing appear.

Refer to the data design section of the *Translations Guide* for a description of the other fields.

Datafilling table MTAVERT

Field	Subfield or refinement	Entry	Explanation and action
VERT		0 to 1023	Vertical. Enter the MTA vertical connection number.
VERTCONN		M	Vertical connection. Enter M to indicate multiple connections. A maximum of 32 RCS modules can share a metallic test pair.
	SELECTOR	O	Selector. Use selector O when the entry in VERTCONN is M. You must enter data in the subfields SITE, FRAME, UNIT, and CONTMARK after the selector. This field is a vector of a maximum of 32 entries.
	SITE		Site name. Enter the name for the remote location.
	FRAME	numeric	Frame number. Enter the frame number.
	UNIT	numeric	Unit number. Enter the unit number.
Note 1: You must make changes to fields with multiple entries in the PROMPT mode. In nonprompt mode you can leaave out current entries. ***Note 2:*** Enter the continuation mark (+) in fields with multiple possible entries. Enter the continuation mark (+) when the next line specifies more data or you expect to enter more records. Enter the end mark ($) in fields with multiple possible entries after the last entry.			

Datafill example for table MTAVERT

Sample datafill for table MTAVERT appears in the following example.

MAP example for table MTAVERT

```
TABLE: MTAVERT

VERT                                                    VERTCONN
_____________________________________________________________________

 20              M (O REM1 00 0 ) (O REM1 00 1 )    $
```

Basic call processing (continued)

Datafilling table MTAHORIZ

Table MTAHORIZ (metallic test access horizontal connection) contains the assignment of horizontal agents to a horizontal and horizontal group of MTAMs. Horizontal agents include:

- line test units (LTU)
- metallic test units (MTU)
- operator verification
- metallic jacks (MJACK)
- incoming test access trunks
- extended metallic test access
- short circuits

Different horizontal agents can use the same horizontal. Different horizontal agents must associate with different MTAMs (or horizontal groups). The system allows a maximum of 160 different horizontal agents for a given horizontal.

You can multiply (group) a maximum of 32 MTAMs to connect to a single horizontal agent. You can use a horizontal agent one time

The Basic Call Processing datafill for table MTAHORIZ appears in the following table. The fields that apply directly to Basic Call Processing appear.

Refer to the data design section of the *Translations Guide* for a description of the other fields.

Datafilling table MTAHORIZ (Sheet 1 of 3)

Field	Subfield or refinement	Entry	Explanation and action
HORIZ		0 to 127	The MTA horizontal. Enter the MTA horizontal where the test equipment connects. The test equipment is a horizontal agent.
HORIZGRP		0 to 159	The MTA horizontal group. Enter the horizontal group number that identifies the horizontal and the horizontal agent as a different tuple. The horizontal group allows assignment of different test equipment on the same MTA horizontal.
HORIZAGT		see subfield	Horizontal agent. This field contains several subfields. The value of the selector in use determines the subfields.
HORIZAGT (continued)	SELECTOR	S, L, T, B, E, MJ, J, and LA	Selector. Enter S for a timed short circuit. Enter L for LTU or MTU assignment. Enter L for complete subfields CLLI, EXTRKNM, and ALTUSE. Enter T for incoming test access or operator verification trunk assignment. Enter T for complete subfields CLLI and EXTRKNM. Enter B for a board-to-board dedicated horizontal and complete subfield BBTNR. Enter E to multiply a horizontal of a minibar switch from a host. Enter E to multiply a remote to the vertical of a host minibar switch. Enter E to complete subfield EMTAVERT. Enter MJ for metallic connection to the tip and ring of the subscriber line. Enter MJ to complete subfields CLLI and MJACKNUM. Selectors J and LA are for licensee use.

Note 1: You must make changes to fields with multiple entries in the PROMPT mode. In nonprompt mode you can miss current entries.

Note 2: Enter the continuation mark (+) in fields with multiple possible entries. Enter the (+) when the next line specifies more data or you expect to enter more records. Enter the end mark ($) in fields with multiple possible entries after the last entry.

Basic call processing (continued)

Datafilling table MTAHORIZ (Sheet 2 of 3)

Field	Subfield or refinement	Entry	Explanation and action
	CLLI	alphanumeric	Common language location identifier. Enter LTU for line test unit. Enter MTU for metallic test unit. For operator verification or an incoming test access trunk, enter the alphanumeric code that represents this trunk group in table CLLI. Enter MJACK for metallic jack.
	EXTRKNM	0-9999	External trunk number. Enter the external trunk number to the line test unit, metallic test unit, operator verification trunk, or the incoming test access trunk. The external trunk number is in table TRKMEM
	ALTUSE	Y or N	Automatic line test use. Enter Y to use line test equipment for automatic line testing (ALT). Enter N in all other cases.
	BBTNR	0 to 7	Board-to-board testing number. Enter the number of the board-to-board set this horizontal corresponds.
	EMTAVERT	0 - 639	Extended metallic test access column. Enter the vertical on the MTA in the host where the horizontal connects.
	MJACKNUM	1 to 256	Metallic jack number. When the entry in subfield CLLI is MJACK, enter the metallic jack number.
MTAGRP		refer to subfields	MTA group. This field contains a list of MTA drivers that multiply to the test equipment. This field is a vector of a maximum of 32 multiples of subfields MTAMEM and HORIZ.

Note 1: You must make changes to fields with multiple entries in the PROMPT mode. In nonprompt mode you can miss current entries.

Note 2: Enter the continuation mark (+) in fields with multiple possible entries. Enter the (+) when the next line specifies more data or you expect to enter more records. Enter the end mark ($) in fields with multiple possible entries after the last entry.

Datafilling table MTAHORIZ (Sheet 3 of 3)

Field	Subfield or refinement	Entry	Explanation and action
	MTAMEM	0 to 511	The MTA minibar driver member. Enter the MTAM driver member number where the horizontal connects.
	HORIZ	0	This field is read only. This field provides information about the horizontal where the MTA drivers connect. Enter 0 to satisfy table control.
Note 1: You must make changes to fields with multiple entries in the PROMPT mode. In nonprompt mode you can miss current entries. ***Note 2:*** Enter the continuation mark (+) in fields with multiple possible entries. Enter the (+) when the next line specifies more data or you expect to enter more records. Enter the end mark ($) in fields with multiple possible entries after the last entry.			

Horizontals are not reserved for dedicated LTUs. Nondedicated LTUs do not have a restriction on assignment.

An LTU can be assigned to the host switching unit. If this event occurs the system multiplies the horizontal that contains the assigned LTU. The system applies the horizontal to all minibar switches assigned to the host switching unit. An LTU can be assigned to a remote location. If this event occurs the system multiplies the horizontal that contains the assigned LTU. The system multiplies the horizontal to all minibar switches assigned to the remote location.

When the minibar switch is at the host switching point assignment restrictions are not present for some assignments. Restrictions are not present for assignment of incoming test and operator verification trunks. Each incoming test access trunk and operator verification trunk requires one horizontal.

When the MTA configuration is small or medium, some horizontals are multiplied to all minibar switches. These horizontals have the assignments for incoming test access and operator verification trunks. The minibar switches are at the host switching unit.

When the minibar switch is remote from the host switching unit, horizontals are available for the the following:

- the assignment of incoming test access trunks
- operator verification trunks
- extension of the metallic test access feature.

Basic call processing (continued)

Each incoming test access trunk and operator verification trunk requires one horizontal. Each vertical on the host minibar switch requires one horizontal. The system assigns these verticals to a horizontal on the minibar switch at the remote or host location.

For assignment of the LTUs, incoming test access, and operator verification trunks to trunk group refer to tables TRKGRP, TRKSGRP, and TRKMEM. For assignment of the trunk subgroup and trunk member tables, refer to tables TRKGRP, TRKSGRP, and TRKMEM.

Table TRKMEM must contain an LTU or MTU before the addition of an LTU or MTU to table MTAHORIZ can occur. Deletion of the LTU or MTU from table TRKMEM can occur. If this event occurs the system marks the tuple that correspond in table MTAHORIZ as deleted. The system restores the tuple that corresponds if the addition of LTU or MTU to table TRKMEM occurs.

Note 1: Each DMS-100 switch office can have a maximum of 256 metallic jacks.

Note 2: The system allocates the memory for this table to a maximum of 2000 tuples.

Datafill example for table MTAHORIZ

Sample datafill for table MTAHORIZ appears in the following example.

MAP example for table MTAHORIZ

```
TABLE: MTAHORIZ

HORIZ
    HORIZGRP                HORIZAGT
                                                    MTAGRP
_____________________________________________________________

8
      0       L       LTU   0 Y         ( 0 0) ( 2  0)$
```

Tools for verifying translations

Using the Central Office Data Engineering System

The Central Office Data Engineering System (CODES) is automated. This automatic operation allows the CODES to aid translations data input for new and extension DMS-100 Family switch central offices. The following abilities in the CODES database assist operating company personnel with engineering translations data.

Data verification

The CODES feature has complete features to check data. These features allow you to verify data accuracy. You can verify data as a job progresses and when a job is complete. Users submit completed jobs that do not have errors. The CODES features that check data appear in the following table.

CODES data-checking feature

Feature	Description
Intertable checking	Prevents entry of data that does not correctly match data in tables that correspond. Disable the feature to allow data entry. Modify the feature when you enter the table data that matches at a later time.
Data-integrity checking	Makes sure that input data through a completed job matches data that corresponds in other tables.
Incomplete table identification	Alerts you to a missed field when the cursor moves from a tuple. You can locate and enter data for missing fields in a completed job.
Digit-range checking	Does not allow you to enter invalid or overlapping digit ranges in a table. You can check for digit-range errors in a completed job.
Note: Complete call-processing checking is not available at this time.	

Duplicating data

To create tables duplicate the specified number of tuples and subtables. Incorporate these tuples and subtables in the table. You must enter data in the fields for the table specified.

Data compilation

The CODES provides commands that allows you to find, select, and sort tuples and fields. The customer data schema reference command (CDSREF) directs you to an exact location. The CDSREF directs you to the location in a Nortel publication that explains a specified table.

Translations Maintenance/Final Lines feature

The Translations Maintenance/Final Lines (TM/FL) feature provides new capabilities for distributed users of CODES.

This TM/FL feature provides new capabilities for distributed users of CODES database. The TM/FL feature allows the download of translations data from CODES directly to a DMS-100 Family switch.

Basic call processing (continued)

The ability to upload and download between a DMS-100 Family switch and CODES allows the following simplifications in translations engineering:

- The ability to upload tables common to many switches to CODES. These tables can act as standardized data for engineering new switches. Tables uploaded from an current switch can provide a base for data-integrity verification for an extension to the switch.
- The use of uploaded tables to verify that information from a switch matches the data for the switch in CODES. This switch is in service.
- Gather work orders in CODES. The ability to download work orders to a buffer area in a DMS-100 Family switch. On-site operating company personnel perform these work orders. This automated procedure replaces hard copy or other methods of work-order administration.
- The ability to upload switch translations data. This data can merge with the data for the switch in CODES. This procedure allows an automated process to upgrade the office in CODES to the current BCS level. This feature eliminates manual upgrades of the CODES database.

Final lines

The operating company uses the TM/FL feature with CODES capabilities to load final-lines data to the DMS-100 Family switch. The operating company converts the final-lines data from the current format to CODES. The operating company can preform the following actions:

- Correct errors early in the engineering process with the data-checking procedures. These procedures are available through CODES with the TM/FL feature.
- Provide new data because the operating company can enter final-lines changes later in the engineering process.
- Data check a complete office to prevent errors like directory-number copies between current data and final-lines data.

Implementing CODES

Operating companies can use flexible distributed or central access formats.

- Distributed users store the CODES account on PCs or minicomputers. Distributed users send final data electronically, or on disk to a regional Nortel engineer. This Northern Telecom Engineer verifies the final data.
- Central users access the CODES account. Central users submit final data. To perform these actions users dial to the Northern Telecom Hewlett-Packard 9000 (HP 9000) CODES minicomputer. An 800 number or outward wide area telephone system (OUTWATS) line allows access to the system.

At Nortel, data files from the user CODES account combine with different equipment, engineering databases and other data. These files combine to verify the final translations output. The combined files are upload to the Northern Telecom laboratory switch. The combined files help to develop and test the final translations output. This final output loads from a magnetic tape drive to the DMS-100 Family switch of the operating company.

CHECKTAB

The CHECKTAB is a table verification process that the operating company runs before the operating company makes an image tape. After the operating company makes the image tape, CHECKTAB can be run to verify office datafill.

If CHECKTAB is not available the operating company uses the TABCHK (table check) utility to verify the tables. The operating company can use the ALL option to run the CHECKTAB program on one table or on multiple tables.

The system checks all tables in the table CUSTAB if the operating company uses the ALL option. The program identifies data corruption or differences in the software tables. The operating company can direct the output from CHECKTAB to the MAP screen, printer, disk, tape, or store file.

Note 1: Before you run CHECKTAB, use CSCAN to access software delivery bulletins that apply to the CHECKTAB program before you run CHECKTAB. Make sure to follow the bulletin instructions when you use CHECKTAB.

Note 2: To determine if the CHECKTAB feature is available, enter HELP CHECKTAB at the MAP terminal. If CHECKTAB is available, the terminal displays the detailed help message. If CHECKTAB is not available a response appears that indicates CHECKTAB is not available.

A user-specified device (SFDEV), tape or disk, can receive the output. The SUMMARY$FILE stores the results.

The CHECKTAB program performs a table check. The CHECKTAB program reads and writes each tuple in the table. The CHECKTAB program does not make data changes.

If the read or write operation fails, the tuple position appears. This process allows identification of the table and the exact problem tuple. Table editor comments and warnings appear when CHECKTAB detects errors.

Basic call processing (continued)

The operating company must correct errors and data that is not consistent. The CHECKTAB indicates these errors. The operating company must correct the errors before the operating company makes the system image tape. The appropriate documentation to support CHECKTAB is in *Routine Procedures*.

TABCHK

The TABCHK program is available at all BCS levels. This program checks data, counts the tuples in a table, and checks for false tops and bottoms in a table.

The CHECKTAB process reads and writes every tuple in a table. The CHECKTAB process provides a more complete table check than TABCHK. If the current software BCS load is a minimum of 28, use CHECKTAB instead of TABCHK.

SERVORD

The service order system (SERVORD) allows operating companies to perform operations like:

- addition and removal of subscriber service from lines
- addition and deletion of line service options
- change of the LEN and DN of current lines
- addition and deletion of features to and from lines

If you enter a SERVORD in the prompt mode the system prompts you for input. Enter a SERVORD in the nonprompt mode. In the nonprompt mode the system enters all the input in one command string.

When entry of a SERVORD is complete, the system displays the complete SERVORD for verification. The system prompts for a Y (yes), N (no), or E (edit). Enter N to abort the service order or E to edit the service order in prompt mode. On the entry of a Y, the system verifies the service order.

If the system detects an error, the system rejects the service order. The system accepts a service order without a service order number (SONUMBER) for immediate activation.

SERVORD commands

The service order commands and a description of each command appear in the following table.

Service order commands

Command	Description
SERVORD	Accesses the service order software.
ADD	Adds a line or lines to a current hunt group. Adds current lines to a call pickup group.
ADO	Adds options to lines. Adds current lines to a directory number hunt (DNH) group.
DEL	Deletes a line or lines from a hunt group. This command applies to hunt group members except pilot.
DEO	Deletes options from lines.
NEW	Establishes new service. This command applies to separate nonhunt lines and party lines.
OUT	Removes service that applies to separate lines and the pilot of the hunt group.

SERVORD prompts

The SERVORD prompts to implement SCM-SLC-96 separate line options appear in the following table. These line options appear in the example service orders.

SERVORD prompts to implement SCM SLC-96 individual line options (Sheet 1 of 2)

Prompt	Input	Explanation
DN	Seven digits, entered with no spaces or hyphens	Directory number associated with the service to establish, modify, or delete.
LCC	1FR	Line class code of the service to establish, modify, or delete. The individual flat rate for residence and business is 1FR.
LATANAME	NILLATA (LATA name defined in table LATANAME)	The calling local access and transport area (LATA) name associated with the originator of the call.

Basic call processing (continued)

SERVORD prompts to implement SCM SLC-96 individual line options (Sheet 2 of 2)

Prompt	Input	Explanation
LTG	0-63	Line treatment group number. Calculates the line attribute index when the DN and LCC are not enough to find a correct index.
LEN	<site>ffuddcc	Line equipment number associated with a service to establish, modify, or delete. • site is the site name, defaults to host • ff is the frame number • u is the unit number • dd is the drawer number of the line spread group • cc is the line circuit number
OPTION	Digitone	Line service options.
INTERCEPT _NAME	Four alphanumeric characters	Type of intercept desire.

SERVORD examples for implementing individual line options

The following SERVORD examples illustrate how to perform the following actions:

- establish a separate line without options
- add an option to a separate line.
- delete an option from a separate line
- remove a current separate line service

SERVORD example for establishing an individual SCM SLC-96 line without options in prompt mode

```
>SERVORD
SO:
>NEW
SONUMBER:
><RETURN>
DN:
>5320105
LCC:
>1FR
LATANAME:
>NILLATA
LTG: 0
>230
LEN_OR_LTID
>00 0 01 27
OPTION:
>$
COMMAND AS ENTERED:
NEW NOW 90 11 13 PM 5320105 1FR NILLATA 230 HOST 00 0
01 27 $
ENTER Y TO CONFIRM, N TO REJECT OR E TO EDIT
>Y
```

SERVORD example for establishing an individual SCM SLC-96 line without options in no-prompt mode

```
>SERVORD
SO:
>NEW  $ 5320105 1FR NILLATA 230 00 0 01 27 $
ENTER Y TO CONFIRM, N TO REJECT OR E TO EDIT
> Y
```

Basic call processing (continued)

SERVORD example for adding an option to an individual SCM SLC-96 line in prompt mode

```
>SERVORD
SO:
>ADO
SONUMBER:
><RETURN>
DN_OR_LEN:
>5320105
OPTION:
>DGT
OPTION:
>$
COMMAND AS ENTERED:
ADO NOW 90 11 13 PM 5320105 ( DGT ) $
ENTER Y TO CONFIRM, N TO REJECT OR E TO EDIT
>Y
```

SERVORD example for adding an option to an individual SCM SLC-96 line in no-prompt mode

```
>SERVORD
SO:
>ADO$5320105DGT$
ENTER Y TO CONFIRM, N TO REJECT OR E TO EDIT
> Y
```

SERVORD example for deleting an option from an individual SCM SLC-96 line in prompt mode

```
>SERVORD
SO:
>DEO
SONUMBER:
><RETURN>
DN_OR_LEN
>00 0 01 27
OPTION:
>DGT
OPTION:
>$
COMMAND AS ENTERED:
DEO NOW 90 11 13 PM HOST 00 0 01 27 ( DGT ) $
ENTER Y TO CONFIRM, N TO REJECT TO E TO EDIT
>Y
```

SERVORD example for deleting an option from an individual SCM SLC-96 line in no-prompt mode

```
>SERVORD
SO:
>DEO $ 00 0 01 27 DGT $
ENTER Y TO CONFIRM, N TO REJECT OR E TO EDIT
> Y
```

Basic call processing (continued)

SERVORD example for removing a current individual SCM SLC-96 line service in prompt mode

```
>SERVORD
SO:
>OUT
SONUMBER:
><RETURN>
DN:
>5320105
LEN_OR_LTID:
>00 0 01 27
INTERCEPT_NAME:
>BLDN
LEN:
>$
COMMAND AS ENTERED:
OUT NOW 90 11 13 PM $ 5320105 HOST 00 0 01 27 BLDN
ENTER Y TO CONFIRM, N TO REJECT OR E TO EDIT
>Y
```

SERVORD example for removing a current individual SCM SLC-96 line service in no-prompt mode

```
>SERVORD
SO:
>OUT $ 5320105 00 0 01 27 BLDN $
ENTER Y TO CONFIRM, N TO REJECT OR E TO EDIT
> Y
```

How SERVORD affects tables LENLINES, LINEATTR, and LENFEAT

If a line contains data in table LNINV the SERVORD command enters the correct line attribute number. The line attribute number is for the line in tables LINEATTR and LENLINES.

The SERVORD enters appropriate line options and feature information. This event occurs after you remove the option, feature or both with SERVORD.

SERVORD automatic datafill in table LNINV

You can use SERVORD to add or delete line datafill in table LNINV automatically. This datafill is for remote fiber terminal (RFT) lines in an S/DMS AccessNode system. The auto-create feature removes a manual step. The auto-create feature allows the card in a single SERVORD transaction to have software and services.

Table LNINV does not require line datafill before a SERVORD provisioning request. If line datafill is not present in table LNINV, SERVORD adds datafill. Datafill selection is based on user input, office parameter values, and default values. If line datafill is present, SERVORD alters the data to conform to the service requested. A service removal request removes all datafill for a line. This data includes LNINV data.

The SERVORD user input determines the values for the following LNINV fields.

- LEN
- CARDCODE
- PADGRP
- GND
- CARDTYPE

The system draws the LNINV field BNV from a hard-coded default. If the addition of a tuple occurs, the default is non-loaded (NL). To change the value to loaded (L), edit the LNINV tuple. If datafill is present for a line, and the SERVORD transaction alters that datafill, the BNV value defaults to NL.

The system takes LNINV field MNO from RDT_SO_AUTOCREATE_LNINV, a new office parameter in table OFCENG. This parameter determines if the MNO default is Y or N. If line datafill is present for a line, and the SERVORD transaction alters that line. The MNO value defaults to the value in parameter RDT_SO_AUTOCREATE_LNINV.

The auto-create feature is enabled or disabled through the parameter RDT_SO_AUTOCREATE_LNINV. If the you disable the feature, line datafill in table LNINV must be present before the system can provide new services.

The state of the auto-create ability (enabled or disabled) affects the default values in fields BNV and MNO. The following table cross-references:

- entered LNINV tuples
- ability enabled or disabled

Basic call processing (continued)

- BNV value
- MNO value

Cross-reference of current LNINV datafill, auto-create enabled or disabled, BNV value, and MNO value

Entered LNINV tuple is present?	Auto-create enabled?	BNV value after transaction	MNO value after transaction
Y	enabled	NL	office parameter
N	enabled	NL	office parameter
Y	disabled	copied from current tuple	copied from current tuple
N	disabled	transaction failed. The system generates an error message	transaction failed. The system generates an error message

SERVORD limits

SERVORD cannot function with special-service lines.

The following limits apply to the auto-create ability:

- This ability affects table LNINV datafill for RFT lines in S/DMS AccessNode systems.
- This ability enhances flow-through provisioning for locally switched services on RFT service adaptive access (SAA) line cards. This ability does not affect service provisioning for remotely-switched services, services that are not switched, or special services.
- This ability is available through SERVORD. This ability is not available through the table editor interface.
- The RFT must maintain DMS messaging. A cut off can occur to the DMS messaging to the RFT. A problem can occur at the RFT that does not allow the RFT from completing a request. If one of these events occurs the SERVORD transaction succeeds. The system busies the line and generates a log.
- The line must be able to maintain service. If the addition of datafill to table LNINV occurs but the line cannot return to service, the SERVORD

transaction succeeds. The line becomes system busy. The system generates a log.

- Input must be consistent with current service. If you attempt to submit a request that is not consistent the SERVORD transaction fails. An example of a request that is not consistent is an option that is not consistent with the service.

SERVORD prompts

The SERVORD auto-create ability uses prompts like the prompts in the datafill of table LNINV with the table editor. Refer to the Datafilling table LNINV section for information on these prompts.

SERVORD example for adding a line to table LNINV

The addition of a line to TABLE LNINV with the NEW command appears in the following SERVORD example. The example illustrates how to provision 1FR service on an S/DMS AccessNode line. Tuples are not present before the transaction.

SERVORD example for adding a line to table LNINV

```
>NEW
SONUMBER:  NOW 93 11 10AM
>
DN:
> 6216001
LCC:
> 1fr
LATANAME:
> nillata
LEN_OR_LTID:
> rdt1 6 0 1 1
OPTION:
> gnd
OPTION:
> $
COMMAND AS ENTERED;  NEW NOW 93 11 10AM 6216001 1FR
NILLATA RDT1 06 0 01 01 (GND) $
ENTER Y TO CONFIRM,N TO REJECT OR E TO EDIT y
LEN: RDT1 06 0 01 01 RDT line provisioning request completed
```

SERVORD example for deleting a line from table LNINV

The following SERVORD example illustrates how to use the PUT command to delete a line from table LNINV.

Basic call processing (end)

SERVORD example for deleting a line from table LNINV

```
>OUT
SONUMBER:  NOW 93 11 10AM
>
DN:
> 6216001
LEN:
>  rdt1 6 0 1 1
INTERCEPT NAME:
>bldn
COMMAND AS ENTERED;  OUT NOW 93 11 10AM 6216001 RDT1 06 0
01 01 BLDN
ENTER Y TO CONFIRM,N TO REJECT OR E TO EDIT y
LEN: RDT1 06 0 01 01 RDT line provisioning request completed
```

SERVORD example for changing a line in table LNINV

The following SERVORD example illustrates how to change a line in table LNINV with the CLN command. In the example, POTS service is transferred from RDT1 6 0 1 1 to RDT1 6 0 1 2 and datafill is not present for RDT 1 6 0 1 2.

SERVORD example of changing a line in table LNINV

```
>cln
SONUMBER:  NOW 93 11 16PM
>
OLD_LEN:
> rdt1 6 0 1 1
NEW_LEN:
>  rdt1 6 0 1 2
COMMAND AS ENTERED;  CLN NOW 93 11 16PM RDT1 06 0 01 01
RDT1 06 0 01 02
ENTER Y TO CONFIRM,N TO REJECT OR E TO EDIT
>y
LEN: RDT1 06 01 02 RDT line provisioning request completed
LEN: RDT1 06 01 01 RDT line provisioning request completed
```

Custom Local Area Signaling Services

Functional group

RES00001

RES00003

RES00006

Feature package

NTXE38AB Display Services SCM/SMS

NTXQ70AA Universal Access to CLASS

NTXA01AA Calling Number Display

NTXA82AA Enablers CLASS LIOD

Release applicability

XPM05 and later versions

Requirements

To operate, Custom Local Area Signaling Services requires the following feature packages:

- NTXA64AA Residential Enhanced Services (RES)
- NTXA82AA CLASS Line Office Data
- NTX270AA New Peripheral Maintenance Package
- NTX898AA Variable Speed Call Access Code
- NTX269AA Universal Tone Receiver Software

Description

These features allow the delivery of CLASS to customer premises equipment (CPE) that complies with Bellcore TR-30, TR-575, and TR-1273.

The CLASS features are available for residential and small business subscriber lines that connect to an RCS. The SMS must serve these lines. The subscriber can receive calling number identification and many different responses.

Analog Display Services Interface (ADSI) capability and Spontaneous Call Waiting Display with Disposition (DSCWID) are CLASS features. The Service Order System (SERVORD) can add these features to RES and IBN Line Class Code (LCC) subscriber lines.

Custom Local Area Signaling Services (continued)

Visual screen list editing (VSLE) and call logging features require CPEs with ADSI capability.

The DSCWID feature provides an interface to CPEs that comply with Bellcore specification TR-416.

Operation

The ADSI allows the download of softkey and display information to an ADSI compatible CPE from the central control (CC). The static download of feature information to the CLASS Modem Resource (CMR) card in the SMS reduces the amount of data that the CC must process in real time.

The Calling Number Delivery (CND) feature operates when a normal termination call occurs on a line with the CND option. The CC sends only the necessary caller information to the SMS.

The universal tone receiver (UTR) card in the SMS collects and interprets information tones from the CPE.

The ADSI signaling protocol allows the download of softkey and display information to an ADSI-compatible CPE. Data transfers from the central control (CC) to the CLASS modem resource (CMR) card in the RSC-S. To implement CLASS features, the CC must maintain close synchronization with the CPE at all times. The CC records information on CLASS call processing and distribution. This functional group does not support some CLASS features during emergency stand alone (ESA).

Spontaneous Call Waiting With Disposition (DSCWID) is a CLASS feature. This feature allows a subscriber to receive caller identification (CID) information on a call that waits for connection. The subscriber receives this information when the subscriber is off-hook. The DSCWID allows the subscriber to control the distribution of incoming calls when an off-hook stable call is present. The system applies default treatments when the subscriber does not respond to a call waiting alerting tone. These treatments appear in the office tables.

Bellcore TR-416 describes requirements for DSCWID. This protocol specifies how this feature interfaces with the following sets.

- ADSI—Screen based CPE that can display options
- SCWID—Non-ADSI CPE that can deliver CID data when the subscriber is offhook
- 2500—Non-ADSI CPEs that can signal dual tone multi-frequency (DTMF). These CPEs cannot deliver CID data when the subscriber is off-hook.

During the silent interval after the first ring, the SMS delivers the calling number. The SMS also delivers the date and time of the call. The SMS delivers this information to customer equipment in an ADSI format through the CMR card. The silent interval after the first ring must be a minimum of 3 s. The toneset card supplies ADSI tones to the CPE when the CLASS features are active. The toneset card is on the SMS. The ADSI tones comply with Bellcore.

Translations table flow

This package does not affect standard translations data flow.

Limits

The CLASS feature requires customer premises equipment (CPE) with ADSI display capability that complies with Bellcore TR-30, TR-575, and TR-1273. The CLASS feature requires CPE to receive and display the calling number information. The CPE can use CLASS features that do not depend on the ADSI feature.

Addition of the DSCWID feature cannot occur to a line with the Call Hold (CHD) option.

You can assign DSCWID to a line that uses the Change Service Orders (SERVORD) package. For this condition, the system assigns the Call Waiting Option (CWT) to that line. This event occurs if additional required options are not assigned.

The additional SMS hardware requirements to implement the ADSI and DSCWID CLASS features that comply with Bellcore are:

- installation of the combined messaging and tone generator circuit card with ADSI, NT6X69AD.
- The TONESET field is in the table LTCINV. This field must be set to North American ROM-based toneset with ADSI tone (NORTHAA) when the NTX6X69AD is in use.

Custom Local Area Signaling Services (continued)

- The peripheral processor in the SMS must be the type MX77AA unified processor card.
- Installation and entry of the CLASS Modem Resource (CMR) card, NTX6X78AB. After entry, the CMR must be busied and returned to service to activate the CLASS ADSI compatible features.
- installation and entry of the Universal Tone Receiver (UTR). The UTR must be available at call time.

The system requires a CPE that has ADSI display capability and complies with Bellcore to receive and display calling number information. The CPEs that do not comply with Bellcore that signal with DTMF can use CLASS features like DSCWID. These features do not depend on ADSI. A subscriber with a non-ADSI set can only use a subset of the available options. This condition occurs because the complete options require the CPE to display caller and softkey information. The options have precise signaling requirements.

The DSCWID CLASS feature:

- is not supported on Meridian Business Sets (MBS) or ISDN lines
- does not comply with the Do Not Disturb (DND) feature
- cannot be on a line with the Call Hold (CHD) option

You can assign DSCWID to a subscriber line that does not have CID features assigned. The subscriber can use ALLCID as the off-hook delivery type. In this condition, you must assign a minimum of one of the following CLASS display options to a line. You must assign these options before, or at the time that you assign DSCWID.

- Calling Number Delivery (CND)
- Calling Name Delivery (CNAMD)
- Dialable Directory Number (DDN)

You can use SERVORD to assign DSCWID to a line. If you assign DSCWID, the system automatically assigns the Call Waiting Option (CWT) to that line. The system replaces any previous versions of Spontaneous Call Waiting (SCWID).

A DSCWID CPE must contain a service script to display and control softkey options. The service script is different for proprietary sets and sets that comply with Bellcore. The operating company must provide the service script as part of the conversion service on the line of the subscriber.

Interactions

Custom Local Area Signaling Services does not have functionality interactions.

Activation/deactivation by the end user

Custom Local Area Signaling Services does nor require activation or deactivation by the end user.

Billing

The CLASS services like the DSCWID feature that complies with Bellcore, affect billing. The following examples describe the datafill for table AMAOPTS when the CLASS feature DSCWID is in use.

Datafilling table AMAOPTS

Table AMA options (AMAOPTS) controls the activation and scheduling of the recording options for automatic message accounting (AMA). Table AMAOPTS contains one tuple for each option. The table first contains the default values for each option.

Datafill for the Custom Local Area Signaling Services for table AMAOPTS appears in the following table. The fields that apply to Custom Local Area Signaling Services appear in this table. Refer to the data schema section of the *Translation Guide* for a description of the other fields.

Datafilling table AMAOPTS

Field	Subfield or refinement	Entry	Explanation and action
OPTION			Option. This field contains subfield AMAOPT.
	AMAOPT	alphanumeric	AMA option. Enter the appropriate option for your application.
SCHEDULE			Schedule. This field contains many subfields. Subfield AMASEL appears in this field.
	AMASEL	PERIODIC, OFF, or DEFAULT	AMA selector. Enter the appropriate AMA selector for your application. ***Note:*** To enable the DSCWID conference audit, AMASEL must be set to PERIODIC. AMASEL must be set to DEFAULT when the DEFAULT is PERIODIC.

Custom Local Area Signaling Services (continued)

Datafill example for table AMAOPTS

Sample datafill for table AMAOPTS appears in the following example.

MAP example for table AMAOPTS

```
>POS DSCWID_CONF_AUDIT
DSCWID_CONF_AUDIT
>CHA
TUPLE TO BE CHANGED:
DSCWID_CONF_AUDIT OFF
ENTER Y TO CONFIRM, N TO REJECT, OR E TO EDIT
>E
AMASEL: OFF
>PERIODIC
ONDATE:
>940915
ONTIME:
>0000
SCHEDULE:
>24 HRS
TUPLE TO BE CHANGED:
DSCWID_CONF_AUDIT PERIODIC 940915 0000 24  HRS
ENTER Y TO CONFIRM, N TO REJECT, OR E TO EDIT
Y
```

Station Message Detail Recording

Custom Local Area Signaling Services do not affect Station Message Detail Recording.

Datafilling office parameters

The office parameters that Custom Local Area Signaling Services uses appear in the following table. For additional information about office parameters, refer to *Office Parameters Reference Manual*.

Office parameters that are used by Custom Local Area Signaling Services

Table name	Parameter name	Explanation and action
OFCOPT	VSLE_PRESENT	Visual screen list editing. When the ADSI line option is set to N (no), you must assign ADSI to the subscriber line. This action provides access to visual screen list editing (VSLE). When the VSLE is set to Y, you can access VSLE without the assignment of ADSI to the line.

Datafill sequence

The tables that require datafill to implement Custom Local Area Signaling Services appear in the following table. The tables appear in the correct entry order.

Datafill table requirements for Custom Local Area Signaling Services

Table	Purpose of table
LTCINV	Line Trunk Controller Inventory. Sets the inventories of different peripheral module types.
SOFTKEY	Softkey. Defines softkey information of the CPE.
TEXTPHRS	Text Phrases. Contains the text phrases for display on the CPE.
TEXTLOG	Logical Display Text. Contains the logical names of the text phrases.
DSCWDTYP	Deluxe Spontaneous Call Waiting Identification (DSCWID) type. Defines DSCWID treatment of subscriber lines.
RESOFC	Residential Line CLASS Office Data. Enable CLASS features globally on a DMS-100 family switch.
RESFEAT	Residential Line Feature. You must enter data in table IBNLINES for the line assigned to ADSI.

Datafilling table LTCINV

Datafill for Custom Local Area Signaling Services for table LTCINV appears in the following table. The fields that apply to Custom Local Area Signaling Services appear in this table. Refer to the data schema section of the *Translations Guide* for a description of the other fields.

Datafilling table LTCINV (Sheet 1 of 2)

Field	Subfield or refinement	Entry	Explanation and action
OPTCARD		MSG6X69 and CMR16	Optional card. The range of values for SMS includes MSG6X69 and CMR16. If CMR16 is present, the system prompts the user to enter the CMR software load name.
Note: Changes to fields with multiple entries must occur in the PROMPT mode only.			

Custom Local Area Signaling Services (continued)

Datafilling table LTCINV (Sheet 2 of 2)

Field	Subfield or refinement	Entry	Explanation and action
TONESET		alphanumeric	Tone set. Enter the correct tone set for the switch that you enter. For ADSI features use North American ADSI compliant (NORTHAA).
PROCPEC		alphanumeric	Processor equipment product engineering codes. Enter the two-product engineering codes of the MX77 card. Each unit of the SMS requires one PEC. Enter the PEC for unit 0 first. The PEC for a unit must correspond to the minimum firmware capabilities between the MX77s. The MX77s are in the processor complex. If the UP is an MX77AA, enter MX77AA twice in this field.
Note: Changes to fields with multiple entries must occur in the PROMPT mode only.			

Datafill example for table LTCINV

Sample datafill for table LTCINV appears in the following example.

MAP example for table LTCINV

```
TABLE: LTCINV

LTCNAME
   FRTYPE FRNO SHPOS FLOOR ROW FRPOS EQPEC     LOAD
                                                 EXECTAB
                                                  CSLNKTAB
                                                   OPTCARD
TONESET      PROCPEC
                                                        OPTATTR
PEC6X40
_____________________________________________________________
SMS 0
     SME   0    32   0    C    1 6X02AA    NSS31BE2
                                           (POTS POTSEX)     $
                           (0 40) (0 42) (1 40) (0 30)       $
                      ( MSG6X69 ) (CMR16  CMRAB02)(UTR17)    $
NORTHAA    MX77AA MX77AA
                                                             $
6X40AC
```

Datafilling table SOFTKEY

Table SOFTKEY specifies softkey information for application services. The index in table SOFTKEY is an application service identifier. The index is also

a softkey definer number. Table TEXTLOG references entries in table SOFTKEY.

Datafill for Custom Local Area Signaling Services for table SOFTKEY appears in the following table. The fields that apply directly to Custom Local Area Signaling Services appear in this table. Refer to the data schema section of the *Translation Guide* for a description of the other fields.

Datafilling table SOFTKEY

Field	Subfield or refinement	Entry	Explanation and action
SERVID		alphanumeric	Service identifier. Enter a character string that corresponds to a specified application. This field is a vector of a maximum of eight characters.
DEFNUM		2 to 33	Defining numbers. Enter a numeric value to identify a softkey definer. The specified application uses this definer.
LLABEL		alphanumeric	Label. Enter the label that appears on the CPE set display. This label appears on the line above the softkeys. This field is a vector of a maximum of 18 characters.
SLABEL		alphanumeric	Subset of label. Enter a string of the characters that correspond to the characters in the long label that are not optional. These characters appear on CPE sets that are not equipped to display long labels. This field is a vector of a maximum of seven characters.
RETURN		0-255	Return. Enter the character string that returns to the DMS switch when you press the softkey that corresponds to the character string. This field is a vector of a maximum of 14 characters.
Note: Changes to fields with multiple entries must occur in the PROMPT mode only.			

Datafill example for table SOFTKEY

Sample datafill for table SOFTKEY appears in the following example.

Custom Local Area Signaling Services (continued)

MAP example for table SOFTKEY

```
SERVID   DEFNUM     LLABEL
                  SLABEL
                                                    RETURN
-------------------------------------------------------
CALLOG     4          TOP
                      TOP
                                                       $
CPE1       5           SOFTK02
                     SK02
                                (48) (50) (39) (78)  $
CPE2       6          SOFTK03
                    SK03
                                (48) (51) (39) (78)  $
```

Datafilling table TEXTPHRS

Virtual screen list editing (VSLE) and other display features use table text phrases (TEXTPHRS). Table TEXTPHRS contains instructional and prompting text strings. Each logical display phrase contains these text strings.

Datafill for Custom Local Area Signaling Services for TEXTPHRS appear in the following table. The fields that apply to Custom Local Area Signaling Services appear in this table. Refer to the data schema section of the *Translation Guide* for a description of the other fields.

Datafilling table TEXTPHRS (Sheet 1 of 2)

Field	Subfield or refinement	Entry	Explanation and action
PHRSNAME		alphanumeric	Phrase name. Enter the 2 to 8 character name of the physical phrase.
PHRASE		alphanumeric	Phrase. Enter the test string that appears to the user as instructional or prompt messages. This field is a vector of a maximum of 40 characters. Display capabilities are only 20 characters at a time.
HLMODE		Refer to subfields	High light mode. This field contains subfields POSITION and MODE. You can define a maximum of four highlight modes. Each mode contains a position and a mode.

Datafilling table TEXTPHRS (Sheet 2 of 2)

Field	Subfield or refinement	Entry	Explanation and action
	POSITION	0 to 40	POSITION. Specifies the character position of the change in highlight mode. This field highlights the characters in this subfield to specify to the selected mode. This field highlights the characters until the end of the display, or until the field specifies the next mode position.
	MODE	Normal, Reverse, Grey, or Bold	MODE. Enter the desired mode. The default mode is NORMAL.

Datafill example for table TEXTPHRS

Sample datafill for table TEXTPHRS appears in the following example.

MAP example for table TEXTPHRS

```
PHRSNAME                          PHRASE     HLMODE
-----------------------------------------------
CLCOUNT            GENERIC_CALLOG_ITEM_COUNT  $
CLNEWCT             GENERIC_CALLOG_NEW_COUNT  $
CLTITLE                 CALL_LOGGING_SERVICE  $
```

Datafilling table TEXTLOG

The VSLE and other display features use table logical display text (TEXTLOG). Table TEXTLOG contains the names of the physical phrases that make up a logical display phrase.

Datafill for Custom Local Area Signaling Services for table TEXTLOG appears in the following table. The fields that apply to Custom Local Area

Custom Local Area Signaling Services (continued)

Signaling Services appear in this table. Refer to the data design section of the *Translation Guide* for a description of the other fields.

Datafilling table TEXTLOG (Sheet 1 of 2)

Field	Subfield or refinement	Entry	Explanation and action
LPHRSKEY		Refer to subfields	Logical phrase key. Contains subfields application name, language, and display number.
	APPLNAME	Refer to list	Application name. Enter the name of the feature application this tuple uses. Enter visual screen list editing (VSLE), or call logging (CALLOG).
	LANGUAGE	NILANG, LANG1, or LANG2	Language. Enter the language for the display. The entry NILANG indicates no language.
	DISPNUM	0 to 127	Display number. Enter the numeric index the feature application that identifies the display data in the tuple.
DISPTYPE		S, T, or C	Display type. Enter S for standard display. This display type waits for softkey input from the user. This provides instructions and displays softkeys. Enter T for transient display. This display type provides an informational display that indicates results of user actions where input cannot occur. Enter C for cursor control display. This display type provides instructions. The softkeys that the system uses to wait for softkey or dual tone multi-frequency (DTMF) keypad input appear in this display type.
LRCI		CENTER, RIGHT, LEFT, or INDENT	Left, right, center, indent. This field is the display justification indicator field. Enter the desired mode of justification.
PHRSLIST		2 to 8 alphanumeric characters	Phrase list. Enter the list of a maximum of 16 physical phrase names in table TEXTPHRS. Table TEXTPHRS defines the phrase names. Each logical display phrase contains the phrase names.
DEFNLIST		Refer to subfields	Definer list. Contains subfields SOFTKEY, MODE, and SKT. This field contains a vector of a maximum of 8 softkey definer lists.

Datafilling table TEXTLOG (Sheet 2 of 2)

Field	Subfield or refinement	Entry	Explanation and action
	SOFTKEY	1 to 33	SOFTKEY. Subfield SOFTKEY is the softkey definer number. This number appears in the list of softkey definer numbers in field DEFNUM of table SOFTKEY. The system reserves integer 1 to allow a blank space for a softkey that is not in use.
	MODE	N, H	MODE. Subfield MODE is set to normal (N) or highlight (H).
	SKT	SRV or CPE	Softkey table. Subfield SKT indicates which softkey table is in the CPE. Enter server (SRV) or customer premises equipment (CPE).

Datafill example for table TEXTLOG

The sample datafill for table TEXTLOG appears in the following example.

MAP example for table TEXTLOG

```
         LPHRSKEY  DISPTYPE  LRCI
                         PHRSLIST
                             DEFNLIST
-----------------------------------------------------
CALLOG  LANG1     1     S  LEFT
                          (CLTITLE) $
                          (2 N SRV) $
```

Datafilling table DSCWDTYP

Table deluxe spontaneous call waiting types (DSCWDTYP) defines different DSCWID types. Table DSCWDTYP has a limited size of a maximum of 20 tuples. Use the following keys to enter six tuples in this table:

- PROPRITY
- ADSITIME
- ADSICID
- NODATA

Custom Local Area Signaling Services (continued)

- NOCIDCW
- COMPLETE

The PROPRITY key indicates Proprietary DSCWID.

Operating company personnel cannot change or delete the PROPRITY tuple. The only table control function permitted on the other five tuples is the CHANGE command. Operating company personnel can define a maximum of 14 additional DSCWID types. When operating company personnel create a new tuple, operating company personnel cannot change the NAME field. Operating company personnel can remove or delete a tuple from table DSCWDTYP when field COUNT is set to zero. Operating company personnel cannot change field COUNT.

Datafill for Custom Local Area Signaling Services for table DSCWDTYP appears in the following table. The fields that apply to the DSCWID feature of Custom Local Area Signaling Services appear in this table. refer to the data schema section of the *Translation Guide* for a description of the other fields.

Note: You must enter data in table DSCWDTYP before you define the DSCWID type in table RESOFC.

Datafilling table DSCWDTYP (Sheet 1 of 2)

Field	Subfield or refinement	Entry	Explanation and action
NAME		PROPRITY ADSITIME, ADSICID, NODATA, NOCIDCW, or COMPLETE	DSCWDTYP table key. Enter the name assigned to each DSCWID type. This field contains a maximum of eight characters. ***Note:*** The PROPRITY tuple only accommodates the proprietary DSCWID feature. You can define a maximum of 20 tuples.
ALERT		SASONLY or SASCAS	Type of alerting tone. Enter the type of alerting supplied. Enter SASCAS if the system alerts ADSI-compliant CPE to display DSCWID options. Enter SASONLY if system does not alert CPE to display options.
Note 1: You cannot change or delete the PROPRITY tuple. You can only change, and not delete, the other 5 initial tuples. ***Note 2:*** If CID type is ALLCID, you must assign a CID feature in table RESOFC. ***Note 3:*** Changes to fields with multiple entries must occur in the PROMPT mode only.			

Datafilling table DSCWDTYP (Sheet 2 of 2)

Field	Subfield or refinement	Entry	Explanation and action
CID		NOCID, ALLCID, or TIMECID	Caller ID delivery. Enter the type of CID delivered during the DSCWID session. Options are no data (NOCID), all data of CID type (ALLCID), delivery time and date only (TIMECID).
NONADSI		Y or N	Non ASDI. This field permits DSCWID features to be assigned to non-ADSI sets. When set to N, non-ADSI sets can only signal ANSWER and RETURN softkey options. When set to Y, non-ADSI sets can signal all softkey options in the KEYOPTS field.
COUNT		0 to 99,999	Line count. This field contains the number of lines assigned this DSCWID type. ***Note:*** You cannot change this field. You only delete tuples from table DSCWDTYP if the count is 0. The default value is 0.
KEYOPTS		ALL, ANSWER, RETRN, FWD, BUSY, HOLD, DROP, CONF, DROPFRST, and DROPLAST	Softkey options. This field contains the softkey options available on this DSCWID type. The default value is ALL.

Note 1: You cannot change or delete the PROPRITY tuple. You can only change, and not delete, the other 5 initial tuples.

Note 2: If CID type is ALLCID, you must assign a CID feature in table RESOFC.

Note 3: Changes to fields with multiple entries must occur in the PROMPT mode only.

Datafill example for table DSCWDTYP.

Sample datafill for table DSCWDTYP appears in the following example.

Custom Local Area Signaling Services (continued)

MAP example for table DSCWDTYP

```
NAME       ALERT     CID   NON   ADSI       COUNT
                                                  KEY OPTS
-------------------------------------------------------
PROPRITY   SASCAS    ALLCID       N           0
  (ANSWER)  (FWD)   (BUSY)   (HOLD)   (DROP)   (RETRN) $
ADSITIME   SASCAS   TIMECID      N           0
                                               (ALL) $
ADSICID    SASCAS   ALLCID       N           0
                                               (ALL) $
NODATA     SASONLY  NOCID        Y           0
                                               (ALL) $
NOCIDCW    SASCAS   TIMECID      Y           0
                                               (ALL) $
COMPLETE   SASCAS   ALLCID       Y           0
                                               (ALL) $
```

Datafilling table RESOFC

Datafill for Custom Local Area Signaling Services for table RESOFC appears in the following table. The fields that apply to Custom Local Area Signaling Services appear in this table. Refer to the data schema section of the *Translation Guide* for a description of the other fields.

Datafilling table RESOFC (Sheet 1 of 5)

Field	Subfield or refinement	Entry	Explanation and action
KEY		Refer to list of CLASS features	RSCOFC table key. CLASS feature name. You must apply the feature to a line in table RESFEAT to activate the feature.
ENABLED		Y or N	Feature enabled. When the CLASS feature is disabled (N), lines cannot use the feature.
ACCESS		SUBSCR	Type of access. Values are universal (UNIVER) or subscriber (SUBSCR). You cannot assign DSCWID to UNVER access.
Note: The CFDA is not always available and active. The default treatment assigned can be FWD. If these conditions occur, the system applies the RING default to the caller. A warning message appears at the CC. The message indicates the reason.			

Datafilling table RESOFC (Sheet 2 of 5)

Field	Subfield or refinement	Entry	Explanation and action
FEATNAME		DSCWID	CLASS feature name. The system uses the following subfields if this feature is a CLASS feature DSCWID: • DTYPE • DEFTRMT • AMA • BUSYANNC • BUSYSUPV • DFLTANNC • DFLTSUPV • HOLDANNC • HOLDSUPV • REMINDER • TFLASH • TDEFAULT • THOLD • FNALANN
	DTYPE	Refer to list	DCSWID type name. Name that defines DSCWID type name in table DSCWDTYP. The following options are available: • PROPRITY • ADSITIME • ADSICID • NODATA • NOCIDCW • COMPLETE The default is COMPLETE.
Note: The CFDA is not always available and active. The default treatment assigned can be FWD. If these conditions occur, the system applies the RING default to the caller. A warning message appears at the CC. The message indicates the reason.			

Custom Local Area Signaling Services (continued)

Datafilling table RESOFC (Sheet 3 of 5)

Field	Subfield or refinement	Entry	Explanation and action
	DEFTRMT	Refer to list	Default treatment. Applied to incoming call when subscriber ignores the final call waiting alert. Options: • RING (DEF). Allows call to hear ringing when the system mutes the subscriber alert tones. • ANNC. Connect caller to a specified TELCO announcement. • FWD. Forward to another line. Subscriber must activate the Call Forward Don't Answer (CFDA) feature.
	AMA	Refer to list	AMA recording status. For DSWCID, enter NONE or record if the conference (CONF) option is in use.
FEATNAME (continued)	BUSYANNC	character	Busy announcement. The location name of an announcement in table CLLI. The system applies this name to the calling party if the subscriber choses the BUSY option. ***Note:*** If BUSYANNC is not entered or if the CLLI code is not effective, the default treatment is disconnect.
	BUSYSUPV	Y or N	Apply BUSY supervision. Determine if system applied answer supervision when system first connected to the BUSY announcement. The default is N.
	DFLTANNC	character	Default busy announcement. The location name of an announcement in table CLLI. The system applies this location if field DEFTRMT is entered with ANNC. This event occurs if the subscriber ignores the final call waiting alert. ***Note:*** Entry can be the same CLLI code as in BUSYANNC.
Note: The CFDA is not always available and active. The default treatment assigned can be FWD. If these conditions occur, the system applies the RING default to the caller. A warning message appears at the CC. The message indicates the reason.			

Custom Local Area Signaling Services (continued)

Datafilling table RESOFC (Sheet 4 of 5)

Field	Subfield or refinement	Entry	Explanation and action
	DFLTSUPV	Y or N	Default supervision. Determine if the system applied answer supervision when system first connected to the DFLTANNC announcement. The default is N.
	HOLDANNC	character	HOLD announcement. The location name of an announcement is in table CLLI. The system applies this name to the calling party if the subscriber chooses the HOLD option.
	HOLDSUPV	see list	HOLD supervision. Determine if system applied answer supervision when system connected to the HOLD announcement. The options are NO, BEFORE, or AFTER. The default is N.
FEATNAME (continued)	REMINDER	character	REMINDER announcement. The location name of an announcement in table CLLI. The system applies this name to the calling party when the T-HOLD timer expires. ***Note:*** Normally used to advise caller to stay on the line.
	TFLASH	10 to 80 in increments of 5. 5=.5 sec	T-FLASH timer. Timer to allow non-ADSI customer time to signal the conference option after a flash. The default is 15 (1.5 s) ***Note:*** Used for the held call state. If the T-FLASH timer expires the default treatment the system applies is the RETURN option
	TDEFAULT	0 to 110 in increments of 5. 5=5 sec	T default timer. The amount of time after realert before the system applies the default treatment to the calling party.
Note: The CFDA is not always available and active. The default treatment assigned can be FWD. If these conditions occur, the system applies the RING default to the caller. A warning message appears at the CC. The message indicates the reason.			

Custom Local Area Signaling Services (continued)

Datafilling table RESOFC (Sheet 5 of 5)

Field	Subfield or refinement	Entry	Explanation and action
	THOLD	0 to 12 in increments of 1. 1=10 sec	THOLD timer. The length of time between REMINDER announcements when a call is on hold. The collision hold because the subscriber keyed the HOLD option.
	FNALANN	character	Final announcement. The location name of a treatment in table CLLI. The system applies this name to subscribers who do not subscribe to the DSCWID option.
Note: The CFDA is not always available and active. The default treatment assigned can be FWD. If these conditions occur, the system applies the RING default to the caller. A warning message appears at the CC. The message indicates the reason.			

Datafill example for table RESOFC

The sample datafill for table RESOFC appears in the following example. The RESOFC table control allows manual changes. Use SERVORD to apply CLASS features.

Custom Local Area Signaling Services (continued)

MAP example for table RESOFC

```
TABLE RESOFC:
DSCWID Y SUBSCR DSCWID COMPLETE RING NONE NIL N NIL N NIL
NO NIL 15 15 6 $
>CHANGE

ENABLED: Y
>
ACCESS: SUBSCR
>
FEATNAME: DSCWID
>
DTYPE: COMPLETE
>
DEFTRMT: RING
>
AMA: NONE
>
BUSYANNC: NIL
>
BUSYSUPV: N
>
DFKTANNC: NIL
>
DFLTSUPV: N
>
HOLDANNC: NIL
>
HOLDSUPV: NO
>
REMINDER: NIL
>
TFLASH: 15
>
TDEFAULT: 15
>
THOLD: 6
>
FNALANN:
>$
TUPLE TO BE CHANGED:
DSCWID Y SUBSCR DSCWID COMPLETE RING NONE NIL N NIL N
NIL NO NIL 15 15 6 $
ENTER Y TO CONFIRM, N TO REJECT OR E TO EDIT
```

Custom Local Area Signaling Services (continued)

For additional information about CLASS features, refer to the *Translations Guide*.

Datafilling table RESFEAT

The datafill for Custom Local Area Signaling Services for table RESFEAT appears in the following table. Only the fields that apply directly to Custom Local Area Signaling Services appear.

For a description of the other fields, refer to the data schema section of the *Translations Guide*.

Datafilling table RESFEAT

Field	Subfield or refinement	Entry	Explanation and action
LINE		numeric	External LEN number assigned to a line
KEY		0 to 69	Number that designates the feature to assign
FEAT		alphanumeric	CLASS feature name to assign
VAR		alphanumeric	Variable area for this feature to use

Tools for verifying translations

Custom Local Area Signaling Services does not use tools for verifying translations.

SERVORD

The following SERVORD commands add option DSCWID to a line:

- NEW (establish service)
- ADO (add option)
- ADD (add line to a hunt group)

The following SERVERD commands delete option DSCWID from a line:

- DEO (delete option)
- DEL (delete line from a hunt group)
- OUT (remove service)

The change feature (CHF) command can convert lines with the proprietary type of DSCWID to TR-compliant DSCWID.

If CWT is not assigned to a line when you add DSCWID, the system adds CWT automatically. The system removes the CWT feature when you delete the DSCWID feature.

Note: The value DEF can appear in subfields DTYPE, DAMA, and DEFTRMT in table RESFEAT. When this event occurs, SERVORD uses the same datafill as the associated subfields. Table RESOFC defines associated subfields. Table RESOFC contains DTYPE, AMA, and DEFTRMT.

SERVORD limits

The following SERVORD limits apply to Custom Local Area Signaling Services:

- Operating company personnel cannot assign DSCWID to a line that uses the PROPRITY DSCWID type. The PROPRITY type represents the proprietary version of DSCWID in use before the TR-compliant DSCWID. The system blocks the use of PROPRITY type during the ADO and CHF commands.
- If you assign DSCWID to a line with SCWID, DSCWID replaces SCWID. After the replacement of SCWID, the system requires a smaller number of commands to add DSCWID to a line with SCWID.
- If DSCWID is on a line with Call Waiting (CWT), DSCWID supercedes CWT. The CWT remains on the line. The DSCWID is built on top of CWT. The CWT appears as an option when you use a query directory number (QDN). The CWT appears when you use a query line equipment number (QLEN) command to query the line.
- You can assign DSCWID on line that does not have a CID feature. You can assign DSCWID with all calling identification data (ALLCID) as the CID off-hook delivery type in table DSCWDTYP. To assign DSCWID, you must assign CND, DDN, or CNAMD to the line. If the CID off-hook delivery type contains the values NOCID or TIME, the line does not require a CID feature.
- You must add or delete the Call Waiting Intragroup (CWI) feature separately from DSCWID on MDC lines. You must delete CWI or CWR before you delete CWT on a line that contains DSCWID, CWT, and CWI or Call Waiting Ringback (CWR).
- You cannot add DSCWID to a line with Feature Groups assigned.
- You cannot assign DSCWID to a line with an LCC of PSET.

Custom Local Area Signaling Services (continued)

SERVORD prompts

The SERVORD prompts used to assign Custom Local Area Signaling Services to a line appear in the following table.

SERVORD prompts for Custom Local Area Signaling Services

Prompt	Valid input	Explanation
SONUMBER	alphanumeric	The number of the service order
DN_OR_LEN	numeric	The DN or LEN of the DSCWID line
OPTION	DSCWID	The feature to add, modify, or delete
DSUBOPT	DTYPE, DAMA, DEFTRMT	The DSCWID suboption to assign. This field is a vector of a maximum of three suboptions. If the entry of suboptions does not occur, the system uses the default values. The vector terminates with a $.
DTYPEOPT	ADSITIME, ADSICID, NODATA, NOCIDCW, COMPLETE	The DSCWID type name that indicates which DSCWID type to assign from table DSCWDTYP. Additional values can be present if you enter tuples in table DSCWDTYP.
DEFTRMTOPT	RING, FWD, ANNC	The default treatment the system must apply when you do not choose a DSCWID option.
DAMAOPT	NONE, CONF	The type of AMA recording status for use with the CONFERENCE option. Enter NONE for no recording or CONF to generate an AMA billing record.

SERVORD example for implementing Custom Local Area Signaling Services

The following SERVORD example describes how to use the ADO command to add Custom Local Area Signaling Services to a line. The line does not have SCWID or CWT assigned. The entry of the following parameters occurred in table RESOFC before each SERVORD command:

- The default DSCWID type is set to ADSITIME.
- The default DSCWID conference AMA status is set to NONE.
- The default DSCWID default treatment is set to FWD.

SERVORD example for Custom Local Area Signaling Services in prompt mode

```
>SERVORD
SO:
>ADO
SONUMBER:  NOW 89 10 04 AM
>
DN_OR_LEN:
>6215000
OPTION:
>DSCWID
DSUBOPT:
>$
OPTION:
>$
COMMAND AS ENTERED:
ADO NOW 89 10 04 AM 6215000 (DSCWID) $ $
ENTER Y TO CONFIRM, N TO REJECT OR E TO EDIT
>Y
```

SERVORD example for Custom Local Area Signaling Services in no-prompt mode

```
>ADO $ 6215000 DSCWID $ $ Y
```

SERVORD example for overriding the default DSCWID type

The following SERVORD example describes how to use the default type of ADSITIME to add DSCWID to a DSCWID line. The default type changes to ADSICID. This event overrides the default DSCWID type that table RESOFC defines.

Custom Local Area Signaling Services (continued)

SERVORD example for overriding the default DSCWID type in prompt mode

```
>SERVORD
SO:
>CHF
SONUMBER:  NOW 89 10 04 AM
>
DN_OR_LEN:
>6215000
OPTION:
>DSCWID
DSUBOPT:
>DTYPE
DTYPEOPT:
>ADSICID
DSUBOPT:
>$
OPTION:
>$
COMMAND AS ENTERED:
CHF NOW 89 10 04 AM 6215000 (DSCWID) (DTYPE ADSICID) $ $
ENTER Y TO CONFIRM, N TO REJECT OR E TO EDIT
> Y
```

SERVORD example for overriding the default DSCWID type in no-prompt mode

```
>CHF $ 6215000 DSCWID DTYPE ADSICID $ $ Y
```

SERVORD example for overriding all possible parameters

The following SERVORD example describes how to use parameters set in table RESOFC to add DSCWID to a DSCWID line. The CHF command changed all parameters.

Custom Local Area Signaling Services (end)

SERVORD example for overriding all possible parameters in prompt mode

```
>SERVORD
SO:
>CHF
SONUMBER:  NOW 89 10 04 AM
>
DN_OR_LEN:
> 6215000
OPTION:
>DSCWID
DSUBOPT:
>DTYPE
DTYPEOPT:
>ADSICID
DSUBOPT:
>DAMA
DAMAOPT:
>CONF
DSUBOPT:
>DEFTRMT:
DEFTRMTOPT:
>ANNC
OPTION:
> $
COMMAND AS ENTERED:
CHF NOW 89 10 04 AM 6215000 (DSCWID) (DTYPE ADSICID)
(DAMA NONE) (DEFTRMT ANNC) $
ENTER Y TO CONFIRM, N TO REJECT OR E TO EDIT
> Y
```

SERVORD example for overriding all possible parameters in no-prompt mode

```
>CHF $ 6215000 DSCWID DTYPE ADSICID DAMA CONF DEFTRMT
ANNC $ Y
```

Meridian Digital Centrex Basic

Functional group

Functional group: MDC00001

Feature package

Feature package: NTX100AA, MDC Basic

Release applicability

BCS28 and later versions

Requirements

The Meridian Digital Centrex Basic has the following requirements to operate:

- Bilge (NTX000AA)
- Common Basic (NTX001AA)
- Subscriber Carrier Module-100S: Interface to SLC-96 Remote Terminal (NTX398AA)
- Local Features I (NTX901AA)

Description

The NTX100AA provides Meridian Digital Centrex (MDC) minimum features on the RCS.

Operation

The Meridian Digital Centrex (MDC) software is a central-office based system. Large and small business subscribers can use MDC. The MDC software uses a DMS-100 switch to provide a centralized telephone communications exchange.

The MDC software includes multiple telephone features and services. These features are for customers that a private branch exchange (PBX) can serve.

Software additions to the DMS-100 switch implement the MDC features. Rotary or Digitone telephone sets can access the MDC features.

Translations table flow

This package does not alter standard translations data flow.

Limits

Meridian Digital Centrex Basic does not have limits.

Meridian Digital Centrex Basic (end)

Interactions

Meridian Digital Centrex Basic does not have functionality interactions.

Activation/deactivation by the end user

Meridian Digital Centrex Basic does not require activation or deactivation by the end user.

Billing

Meridian Digital Centrex Basic does not affect billing.

Station Message Detail Recording

Meridian Digital Centrex Basic does not affect Station Message Detail Recording (SMDR).

Datafilling office parameters

Meridian Digital Centrex Basic does not affect office parameters.

Datafill sequence

Refer to the *Translations Guide* to identify the datafill sequence and the tables that require datafill to implement the feature.

Tools for verifying translation

Meridian Digital Centrex Basic does not use translation verification tools.

SERVORD

The *Translations Guide* contains information on service orders.

Special Services

Functional group

BAS00016

Feature package

NTX299A

Release applicability

BCS28 and later versions

Requirements

To operate, Special Services has the following requirements:

- Bilge (NTX000AA)
- Common Basic (NTX001AA)
- New Peripheral Maintenance Package (NTX270AA)
- Local Features I (NTX901AA)
- Subscriber Carrier Module-100S: Interface to SLC-96 Remote Terminal (NTX398AA)

Description

Feature package NTX299AB supports special-service cards (channel units) in the RCS.

Operation

Feature package NTX299AB supports applications that require special-service cards. To support these applications, the system sets up and maintains through software a nailed-up cross-connection (hairpin connection).

This operation is a peripheral-side (P-side) cross-connection. Information flows from an RCS to the SMS. From the SMS the information switches to a DS-1 line. This DS-1 line leads to a second RCS or other piece of digital equipment. The information does not switch through the network.

Note 1: Digital equipment other than an RCS can be the terminals of a cross-connection.

Note 2: P-side cross-connections occur through the use of a NT6X85AB DS-1 interface card.

Translations table flow

This package does not affect standard translations data flow.

Limits

Special Services does not have limits

Interactions

Special Services does not have functionality interactions.

Activation/deactivation by the end user

Special Services does not require activation or deactivation by the end user.

Billing

Special Services does not affect billing.

Station Message Detail Recording

Special Services does not affect Station Message Detail Recording.

Datafilling office parameters

Special Services does not affect office parameters.

Datafill sequence

The following table lists the tables that require datafill to implement Special Services. The tables appear in the order table entry occurs.

Datafilling tables required for Special Services

Table	Purpose of table
LNINV	Line Circuit Inventory Table. Contains an inventory of subscriber lines and associated line cards for RCS modules.
PSNAILUP	P-Side Nailup Table. Contains an inventory of P-side to P-side nailed-up cross-connections. The P-side endpoints are lines on an RCS, or channels on a DS-1 line that connect to other equipment.

Datafilling table LNINV

Data entry in table Table LNINV (line circuit inventory) must occur through SERVORD. Refer to the SERVORD section of the *Translations Guide* for more information on SERVORD.

Table LNINV (line inventory) and the CKTLOC (circuit locate) command change to accommodate the RCS lines. The line equipment number (LEN) format does not change.

Special Services (continued)

Table LNINV receives RCS line entries. All fields do not change for RCS lines, except the CARDCODE field. The following card codes increase the range of values for this field:

- SCD271 for a SPOTS card that operates as a single-party POTS card
- NAILUP for special-service lines

Note: Table LENLINES cannot receive datafill for lines with the special-service card code NAILUP.

LEN format and physical and logical mapping of line circuits

Refer to Datafilling SCM-100S: Interface to the SLC-96 Remote Terminal. This section contains a description of the LEN format and physical and logical mapping of line circuits.

The datafill for Special Services for table LNINV appears in the following table. Only fields that apply directly to Special Services appear.

Refer to the data schema section of the *Translations Guide* for a description of the other fields.

Special services in table LNINV

To be added as endpoints, special-service lines must be configured in table LNINV.

Special-service lines use even-numbered circuits in table LNINV.

Before deletion of special-service lines from table LNINV can occur, deletion of the associated nailed-up cross-connection in table PSNAILUP must be complete.

Single-party or special services lines can use the SPOTS card. The datafill for the SPOTS card must be NAILUP when the card is for use in special services. The datafill for the two circuits in the SPOTS card must be loop start or ground start. Enter the GND field Y for both circuits, or N for both circuits.

Do not enter SPOTS cards in a Mode III RCS. Equipment in Mode 3 multiplexes 48 time slots on two DS-1 lines. Equipment in Mode 3 expects

single-circuit cards. If you enter SPOTS cards, the system uses even-numbered circuits for the cards only.

Datafilling table LNINV

Field	Subfield or refinement	Entry	Explanation and action
CARDCODE		alphanumeric	Card code. Enter the PEC of the line card. Range of values includes SCD203, SCD221, SCD233, SCD271, SCDFSR, and NAILUP.

Datafill example for table LNINV

The sample datafill for table LNINV appears in the following example.

MAP example for table LNINV

```
REM1 00 0 00 16 NAILUP STDLN     HASU   N  NL   N    NIL
REM1 00 1 02 16 NAILUP STDLN     HASU   N  NL   N    NIL
REM1 00 1 03 16 NAILUP STDLN  WORKING   N  NL   N    NIL
```

Datafilling table PSNAILUP

Table PSNAILUP (P-side nail-up) contains an inventory of P-side to P-side nailed-up cross-connections. The P-side endpoints are lines on an RCS or channels on a DS-1 line that connect to other digital equipment.

The datafill for Special Services for table PSNAILUP appears in the following table. Only fields that apply directly to Special Services appear in the following table.

Refer to the data schema section of the *Translations Guide* for a description of the other fields.

Enter the endpoints on a RCS in table LNINV. The endpoints on digital equipment other than the RCS must have the SMS entered in table LTCINV. The endpoints on digital equipment must have the DS-1 link entered in table LTCPSINV.

Table PSNAILUP requires 14 bytes of memory in protected data store for each nailed-up cross-connection. Allocation of the size of table PSNAILUP occurs at restart time. Table DATASIZE specifies the number of connections. Refer to the data schema section of the *Translations Guide* for more information on table DATASIZE.

Special Services (continued)

The two endpoints must be on the same SMS. If this condition does not occur, the following error message appears on the MAP display:

```
ENDPOINTS NOT CONFIGURED ON THE SAME SMS
```

Table LTCINV must contain the SMS as datafill. If this condition does not occur, the one of the following error messages appears on the MAP display:

```
SMS NOT DATAFILLED IN LTCINV (for lines)DS1 NOT PROPERLY
CONFIGURED (for DS-1 channels)
```

The endpoints cannot be part of a current nailed-up cross-connection. If this condition does not occur, the following error message appears on the MAP display:

```
ENDPOINT PART OF AN EXISTING NAILED-UP CONNECTION
```

You must enter endpoints in table LNINV. If this condition does not occur, the following error message appears on the MAP display:

```
LINE NOT EQUIPPED
```

Line endpoints must have card code NAILUP in table LNINV. If this condition does not occur, the following error message appears on the MAP display:

```
LINE NOT A SPECIAL SERVICES CIRCUIT
```

The DS-1 channels must be on DS-1 lines entered in table LTCPSINV. If this condition does not occur, the following error message appears on the MAP display:

```
DS0 NOT ON AN EQUIPPED DS1
```

Table LTCPSINV must contain the correct configuration of DS-1 lines. If this condition does not occur, the following error message appears on the MAP display:

```
DS1 NOT PROPERLY CONFIGURED
```

The DS-1 channels cannot be on DS-1 lines that terminate on an RCS. If The DS-1 channels are on DS-1 lines that terminate on an RCS, the following error message appears on the MAP display:

```
DS0 TERMINATES ON A REMOTE PERIPHERAL
```

The status of the nailed-up cross-connection must be A (active) or P (pending). If the cross-connection status is not A or P, the following error message appears on the MAP display.

```
MUST SPECIFY ACTIVE OR PENDING STATUS ONLY
```

The ABINSERT field cannot change when the status of a nailed-up cross-connection is active or inactive. To change the ABINSERT field, change the status of the nailed-up cross-connection to pending.

```
CANNOT CHANGE ABINSERT FIELD WHEN STATUS IS ACTIVE OR INACTIVE
```

The system does not allow the table editor CHANGE command when an endpoint in table PSNAILUP requires changes. To change an endpoint, delete the tuple that contains the endpoint and add a new one. The attempt to change an endpoint with the CHANGE command results in the following error message:

```
CHANGE COMMAND NOT ALLOWED ON ENDPOINTS
```

When a part in a nailed-up cross-connection is out-of-service, the status of the connection is out-of-service. The parts include SMS, RCS, or DS-1 link. The following message appears on the MAP display:

```
CONNECTION INACTIVE -- ENDPOINTS NOT IN SERVICE
```

If DS-1 channels are part of a nailed-up cross-connection, an RCS cannot attach to the DS-1 link that holds these channels. Table LENLINES does not accept datafill of lines with special services card code NAILUP.

Note 1: The STATUS field of nailed-up cross-connections uses the CHANGE command.

Special Services (continued)

Note 2: The connection becomes active when the DS-1 line is in service.

Datafilling table PSNAILUP (Sheet 1 of 2)

Field	Subfield or refinement	Entry	Explanation and action
ENDPT1		refer to subfields	Endpoint 1. Enter the first endpoint of the nailed-up cross-connection. This field contains the subfields PSSEL, PMNO, PORT, and CHNL or the subfields PSSEL and LEN.
	PSSEL	refer to list	P-side selector. Enter SMS if the first endpoint is a DS-1 channel. Enter RCS if the first endpoint is an RCS line. If the PSSEL is SMS, ENDPT1 includes PMNO, PORT, and CHNL. If the PSSEL is RCS, ENDPT1 includes LEN.
	PMNO	0 to 127	PM number. Enter the external number of the SMS peripheral.
	PORT	0 to 19	SMS P-side port. Enter the P-side port number of the SMS.
	CHNL	1 to 24	P-side circuit time slot. Enter the DS-1 channel time slot. The range is 1 to 24.
ENDPT2		refer to subfields	Endpoint 2. Enter the second endpoint of the nailed-up cross-connection. This field consists of the subfields PSSEL, PMNO, PORT, and CHNL or the subfields PSSEL and LEN.
	PSSEL	refer to list	P-side selector. Enter SMS if the second endpoint is a DS-1 channel. Enter RCS if the second endpoint is an RCS line. If the PSSEL is SMS, ENDPT2 includes PMNO, PORT, and CHNL. If the PSSEL is RCS, ENDPT2 includes LEN.
	PMNO	0 to127	PM number. Enter the external number of the SMS peripheral.
	PORT	0 to 19	SMS P-side port. Enter the P-side port number of the SMS.
	CHNL	1 to 24	P-side circuit time slot. Enter the DS-1 channel time slot.

Datafilling table PSNAILUP (Sheet 2 of 2)

Field	Subfield or refinement	Entry	Explanation and action
ENDPT2 (continued)	LEN	refer to list	Line equipment number. Enter the LEN of the RCS line. This line contains site (four characters), frame (0-99), unit (0-9), line subgroup (0-3), and circuit (0-23).
STATUS		alphanumeric	Status. Enter the status of the connection: • Active (A) indicates an entered and set up connection. • Pending (P) indicates an entered connection, but that the system has not set up the connection in the peripheral. • Inactive (I) indicates an entered connection, but that the DS-1 link is not in-service. The switch operator cannot enter I. The system sets the status to inactive if the status does not set up a connection after the connection entered. The endpoints remain in table PSNAILUP. The system makes the connection active when both endpoints RTS.
ABINSERT		Y or N	A/B-bit insertion. To prevent insertion of A-bits and B-bits enter N. Data cards that use a DDS hairpin connection have the entry N. Voice connections that require A-bits and B-bits have the entry Y. The default for this field is Y.

Datafill example for table PSNAILUP

Sample datafill for table PSNAILUP appears in the following example.

MAP example for table PSNAILUP

```
TABLE:  PSNAILUP

    ENDPT1       ENDPT2  STATUS    ABINSERT

RCS REM1 0 0 1 0   RCS REM1 0 0 1 2    P          Y
RCS REM1 0 0 1 0         SMS  0 2 1    A          Y
      SMS  0 2 2   RCS REM1 0 0 1 4    A          N
      SMS  0 2 3         SMS  0 2 4    I          N
```

Special Services (continued)

The switch operator uses the table editor CHANGE command to change the status from pending to active, and from active to pending.

If the switch operator specifies active status, and the system cannot set up the connection, the system sets the status to inactive. The endpoints remain in table PSNAILUP, and the system makes the connection active when the two endpoints are in-service.

The switch operator can change the status of a connection from inactive to pending.

The first tuple in the example is a pending, special-service, line-to-line, nailed-up cross-connection. The RCS, listed under ENDPT1 and ENDPT2, indicates that the two endpoints are lines on RCS modules.

The LEN for the endpoints follows the RCS:

- REM1 is the site
- 0 is the RCS frame number
- the second 0 is the RCS unit number
- 1 is the line subgroup or drawer
- the last 0 indicates the circuit

Endpoint 1 has line circuit 0, and endpoint 2 has line circuit 2. The A-bits and B-bits must be inserted in the information stream.

The second tuple is an active, special-service, line-to-DS-0 channel, nailed-up cross-connection. Endpoint 1 is a line on an RCS, and endpoint 2 is a DS-0 channel. Endpoint 2 lists SMS as the terminal of endpoint 2, the SMS number, 0 follows. The SMS P-side port number that connects the DS-1 line on which the channel resides, is 2. The channel number is 1. The A-bits and B-bits are to be inserted in the information stream.

The third tuple is an active, special-service, DS-0 channel-to-line, nailed-up cross-connection. The A-bits and B-bits must not be inserted in the information stream.

The fourth tuple is an inactive, special-service, DS-0 channel-to-DS-0 channel, nailed-up cross-connection. The A-bits and B-bits must not be inserted in the information stream.

To remove a nailed-up cross-connection, the switch operator must delete the appropriate tuple for the connection. Use the DELETE command to delete a tuple. Each endpoint identifies the connection to delete.

The switch operator can position on a tuple in table PSNAILUP with the endpoints. The first endpoint is the key field. The second endpoint is the data field. Refer to *Basic Translations Tools Guide*, for additional information on how to modify data tables.

To change an endpoint in table PSNAILUP, delete the present tuple. You can add a new tuple that contains the new endpoints. Use the ADD command to add a tuple. You can use the table editor CHANGE command on the status field of the connection only.

Limits

The following limits apply:

- If a special-service line is part of a nailed-up cross-connection, you cannot delete the associated data of the line from table LNINV. You can delete the associated data from table LNINV when you delete the line from table PSNAILUP. A DS-0 channel can be part of a nailed-up cross-connection. If this event occurs deletion of the associated data of the channel from table LTCPSINV can not occur. Deletion of the associated data from table LTCPSINV can occur after you delete the channel from table PSNAILUP.
- The table editor CHANGE command alters the STATUS field of table PSNAILUP. Delete the endpoint fields before you add new information.

Tools for verifying translations

Special Services does not use tools to verify translations.

SERVORD

Special Services does not use SERVORD.

4 Subscriber Carrier Module Urban

SMU translations

Introduction to subscriber carrier systems

A subscriber carrier system is one of the many applications of digital transmission systems between a central office (CO) and a subscriber phone.

The subscriber carrier system contains a control terminal or central office terminal (COT) at the central office. The analog switching equipment and a remote terminal are at a remote site. Analog speech and signaling are digitally encoded for transmission over DS-1 links. The DS-1 links connect the control terminal and the remote terminal. The receiving terminal converts the digital signaling to analog. The subscriber carrier system appears in the following diagram.

Figure 4-1 Subscriber carrier system

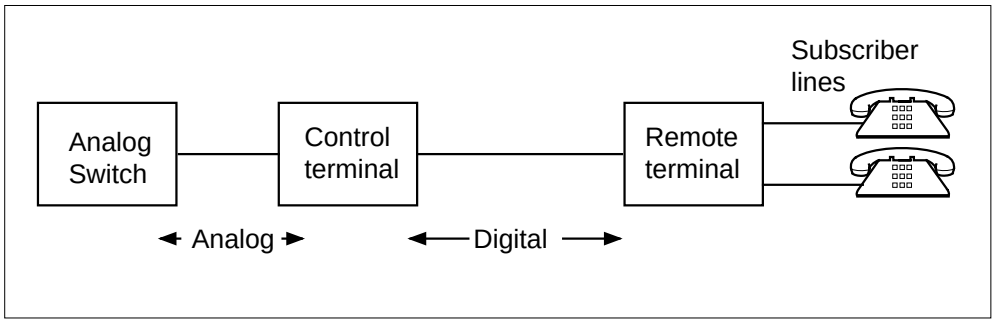

Subscriber carrier systems in the DMS-100 family

Subscriber carrier module is a general term that describes all peripheral modules of this type. New digital-to-digital peripheral modules called subscriber carrier modules (SCM) replace the control terminals. This condition allows the remote terminals to be retained when a DMS-100 Family

digital switch replaced the analog switch. Three types of subscriber carrier modules, and the remotes the modules support, appear in the following table.

Table 4-1 Subscriber carrier modules and the remotes

SCM type	Remote carrier module
Subscriber carrier Module-100 Rural (SMR) (or Subscriber Module Remote)	DMS-1 Rural Remote Terminal (RCT)
Subscriber Carrier Module-100 Urban (SMU) (or Subscriber Module Urban)	DMS-1 Urban Remote Terminal (RCU)
Subscriber Carrier Module-100 Urban (SMU) (or Subscriber Module Urban)	SLC-96 Remote Terminal (RCS)

When integrated with a DMS-100 Family switch, the original remote terminals are retained. The original remote terminals are renamed remote carrier modules. The remote carrier modules are also known as remotes. The DMS-100 subscriber carrier system appears below.

Figure 4-2 DMS-100 subscriber carrier system

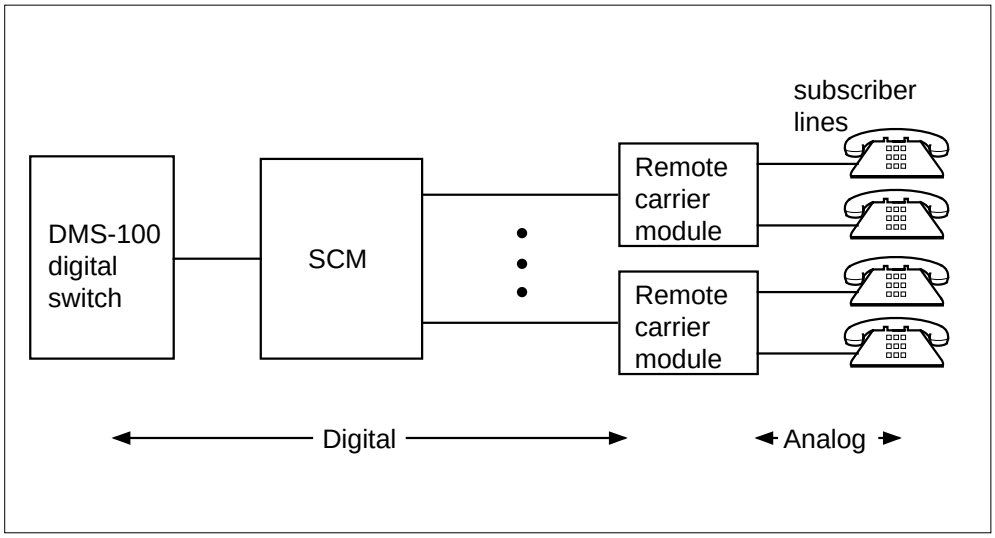

Each SCM can service several remote carrier modules. With the original implementation of the subscriber carrier systems, one control terminal services one one remote terminal.

The SCM provides subscribers with the full resources of a digital switching system for call processing and maintenance. To provides these resources, the SCM integrates the remote carrier modules with the DMS-100 switch. One SCM can support multiple remote carrier modules. Separate line cards for

each subscriber line are eliminated. This condition reduces main distribution frame (MDF) wiring and activity and saves office space. A system with an SCM is less expensive and easier to maintain.

The Subscriber Carrier Module-100 Urban

The SMU is a peripheral module based on line group controller (LGC) and digital trunk controller (DTC) architecture. The SMU is included in a group of peripherals with the LGC, DTC, SMR, and SMS. This group of peripherals are line and trunk controllers (LTC). The LTC can refer to a group of peripherals or to a specified peripheral. This document uses the name Subscriber Module Urban or SMU. The SMU is the primary reference for the DMS-1 Urban remote terminal interface to the DMS-100 switch.

The SMU provides a digital interface between a DMS-100 or DMS-100/200 digital switch and the remote terminal of the DMS-1 Urban digital loop carrier system. In this integrated configuration, the DMS-1 Urban is the Remote Carrier Urban (RCU).

The SMU replaces the COT which eliminates the separate cards the COT provides for each subscriber line. This condition reduces MDF wiring and activity and saves office space. The SMU as a digital interface appears in the following figure.

Figure 4-3 DMS-100 Subscriber Module Urban

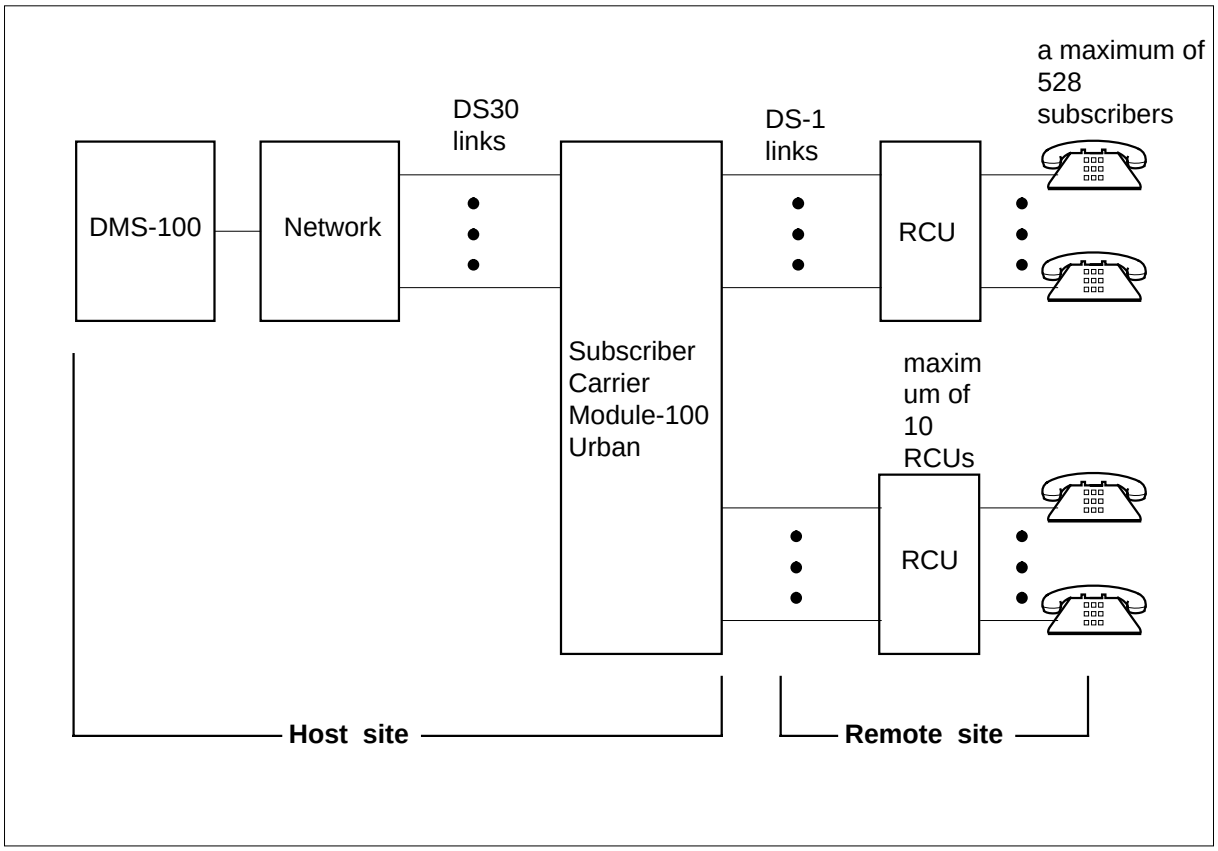

Signaling for SMU

This section describes the signaling that the SMU-RCU subsystem uses. The following sections describe SMU-RCU signaling format, signaling protocols and the features the format and protocols support.

SMU signaling links

The SMU and the RCU exchange information over DS-1 lines that use an extended super frame format. The DS-1 lines operate at a rate of 1.544 Mbps with a sampling frequency of 8000 frames each second.

The DS-1 link contains 24 channels. Each channel contains 8 bits of pulse code modulation (PCM) data. A framing bit is at the front of the sequence. The framing bit makes sure the SMU and the RCU recognize the start of each 24-channel sequence. The framing bit is also the stuffing or S-bit. The system sends 192 bits of information during each 24-channel sequence, and a framing bit. This framing bit is a channel frame.

Channel frames carry speech information, signaling information or operations information. The format of a DS-1 frame appears in the following figure.

Figure 4-4 DS-1 frame format

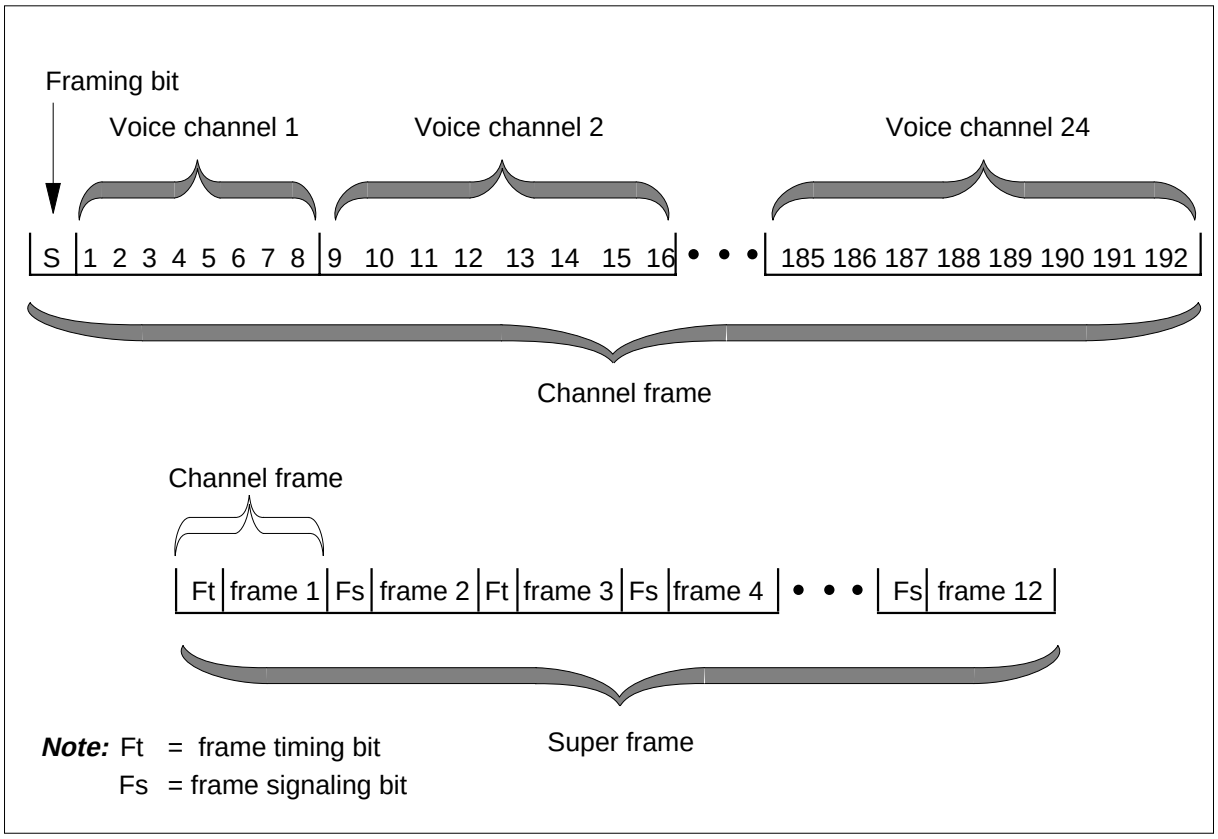

A super frame also appears in the previous figure. Twelve channel frames make up a super frame. A derived data link (DDL) frame contains six super frames or 72 channel frames. A DDL does not appear in the figure.

The 24-bit pattern conveys three types of information:

- frame pattern sequence
- facility data link performance
- cyclic redundancy check

The frame pattern sequence (FPS) is 001110. Every fourth framing bit that begins at the fourth bit carries a FPS bit. With the cyclic redundancy check (CRC), the FPS defines an in-frame condition.

The 4Kb/s facility data link (FDL) bit begins with the first framing bit. The system carries an FDL messaged bit every other frame.

The cyclic redundancy check (CRC) bit begins with the second bit. The system carries the CRC bit every fourth bit. In an extended super frame, the system checks a block check field six times. The CRC-6 check detects bits that

emulate an FSP bit. The check determines if an out-of-frame condition is present.

A-and B-bit signaling

The following individual channel signaling messages use A- and B-bits.

Per-channel signaling

The A- and B-bits are signaling bits that provide the following supervisory information:

- status of subscriber lines (on-hook or off-hook)
- ringing
- dial pulses

Digitone signals contain two frequencies. The system uses eight bits of the time slot to send this information to a Digitone receiver in a maintenance trunk module (MTM). The eight bits of the time slot are assigned to the subscriber. The system does not use the A-bits to send this information.

The A- and B-bits have a value of 0 or 1. The system uses these bits together for signaling. The type of line card that receives or sends the bits determines how the bits are interpreted. For dial pulses, the card sends a series of makes and breaks on the subscriber loop. An A=1 represents a make, and A=0 represents a break.

Note: The SMU transmits frequencies to the RCU in the DS-1 channel assigned to the RCU subscriber. These frequencies range from 16 through 66 Hz.

Coin signaling

Coin lines use A- and B-bits in selected DS-1 speech channels. The DS-1 speech channels are for separate channel signaling and 8-bit patterns in appropriate speech channels for supervision. The system uses A- and B-bits and 8-bit coin signaling patterns together to execute supervision. The coin line card handles ground start or loop start supervisory signaling.

FXB special service signaling

Foreign exchange with battery (FXB) line cards in the RCU handle ground-start or loop-start signaling modes. The system can use A- and B-bit signaling across the RCU-SMU interface, and the SMU for FXB lines. The system uses this signalling when the RCU has station end cards.

Message channels

The SMU and RCU use two 64-Kb/s message channels to exchange system control information. The information is in the first time slots of the number 3 and 4 physical DS-1 lines. The SMU uses system control messages to control

call processing, initialization, and maintenance at the RCU. The RCU uses system control messages to inform the SMU of RCU activities. System control messages contain information like time slot assignments to off-hook subscriber lines, test requests, and alarm statuses.

One message channel time slot is the primary message link. The other message channel is the secondary message link. The primary link is active, and the secondary link is inactive.

The RCU monitors both links for messages. The RCU only responds to messages on the primary link. When DS-1 lines 3 and 4 are first installed, the first channel on DS-1 link 3 is selected as the primary message channel. The system only transmits idle code over the secondary channel.

ISDN BRI signaling

The ISDN basic rate interface (BRI) contains two 64-kbit B-channels for simultaneous voice and data transmission. The BRI is also the “2B+D". The ISDN BRI also contains a 16-kbit D-channel for signaling and packet data. Two types of ISDN BRI signaling, functional and stimulus are available.

Software built in the physical set of the functional BRA terminal supports functional BRI signaling. The system uses the Q.931 protocol with the signaling control protocol (SCP) to send call control messages. The system sends call control messages between the functional BRI terminal and the network.

The system does not support stimulus BRI signaling for the SMU-RCU configuration.

The system supports the following ISDN BRI features on the SMU:

- Attendant Console
- Basic Conference
- Call Forwarding
- Call Request
- Emergency Service Bureau
- Flexible Call
- Mass Call
- Multiple Access Directory Number
- Privacy
- Privacy Release

National ISDN-2/3 BRI Phase I

The National ISDN-2/3 BRI Phase I feature increases the operational versatility of BRI line interface configurations. The feature also expands the BRI service options available to end users.

- Two B-channel access—This ability allows specified terminals access to both B-channels at the same time with a single terminal endpoint identifier (TEI). The terminal that has access is a terminal that supports voiceband information (VI) and circuit mode data (CMD), or VI or CMD alone. This ability applies to both fully initializing terminals (FIT) and non-initializing terminals (NIT). System provisioning controls the number of B-channels a terminal can access.
- Support for non-initializing terminals (NIT)—This ability supports one non-initializing terminal on a BRI interface provisioned with the default logical terminal. An NIT is a new class of BRI terminal that does not initialize Layer 3. The NIT does not require a service profile identifier (SPID). An SPID is an identification number a terminal in the initialization uses.
- Assignment of fixed feature keys to the default logical terminal for NITs—This ability allows the assignment of the following features to the NIT:

  — call forwarding

  — message waiting

  — conference calling

  — call transfer

  — call drop

  The NIT can access these features with dial-access procedures or feature key management procedures.

The National ISDN-2/3 BRI Phase I feature introduces the following interactions:

- This feature changes the way additional call offering (ACO) operates for specified terminals. This feature changes the operation for terminals that have the access privilege entered for two B-channel access. The terminal can have a call active and one B-channel free, and a termination occurs. In this event, the terminating SETUP contains the channel identifier information element (CID IE) encoded to the value of the free B-channel. For terminals without the two B-channel access privilege, this message has the CID IE encoded to “no-channel".
- Flexible calling can be active on a 2B FIT/NIT conference controller. In this event, the system offers all VI terminations that follow to the terminal with the CID IE encoded to “no channel".

MBS signaling

The MBS signaling allows call processing software to communicate directly with the MBS terminal. An above-voice frequency, low-speed data channel transports the current MBS messaging over the loop. This data channel sends signaling information over a separate D-channel between the SMU DCH card and the RCU line card.

The data channel is an 8-kHz signal. The presence or absence of this signal communicates data. The system supports the following MBS features for the SMU:

- Automatic Answer Back
- Automatic Dial
- Automatic Line
- Executive Busy Override
- Call Back Queueing
- Call Forward All Calls
- Call Park
- Call Pickup
- Call Waiting
- End-to-End signaling
- Group Intercom
- Individual Business Line
- Intercom
- Listen on Hold
- Make Set Busy
- Malicious Call Hold
- Multiple Appearance DN
- On-Hook Dialing
- Privacy Release
- Ring Again
- Speed Calling
- 3-Way Call/Call Transfer
- 6-Port Conference
- Feature Display
- Display Called Number

- Display Calling Number
- Query Time
- Business Set Inspect Key
- Automatic Inspect Mode
- Business Set Call Forward Universal Per Key
- Call-Request Enhancement
- Direct Station/Busy Lamp Field for MBS
- Station Camp-On for MBS
- Group Intercom All Call
- MADN Cut-Off on Disconnect (COD)
- MADN Bridging - Three-Way Call
- Multiple Executive Message Waiting Keys per DN

Signaling protocols

The SMU-RCU subsystem uses the following signaling protocols to communicate and provide subscriber services:

- A- and B-bit messages
- DMS-X
- Q.931 CCITT Digital Network Access protocol

A-and B-bit messages

In every sixth and twelfth channel frame, the least important bits from each channel are stolen. The system replaces the least important bits from the sixth frame with A-bits. The system replaces the least important bits from the twelfth frame with B-bits. The A- and B-bits pass information that applies to specified channels.

DMS-X protocol

The DMS-X protocol is a half-duplex protocol. The DS-1 links between the RCU and the SMU use the DMS-X protocol. The DMS-X protocol includes a cyclic redundancy check (CRC) code for error detection.

The DMS-X protocol is an interterminal process that contains handshaking messages. Two terminals engaged in message transfer inform each other of the present messaging condition of the terminals. A general form of handshaking protocol makes up DMS-X protocol. This form of handshaking protocol appears in the following figure.

Figure 4-5 DMS-X handshaking protocol

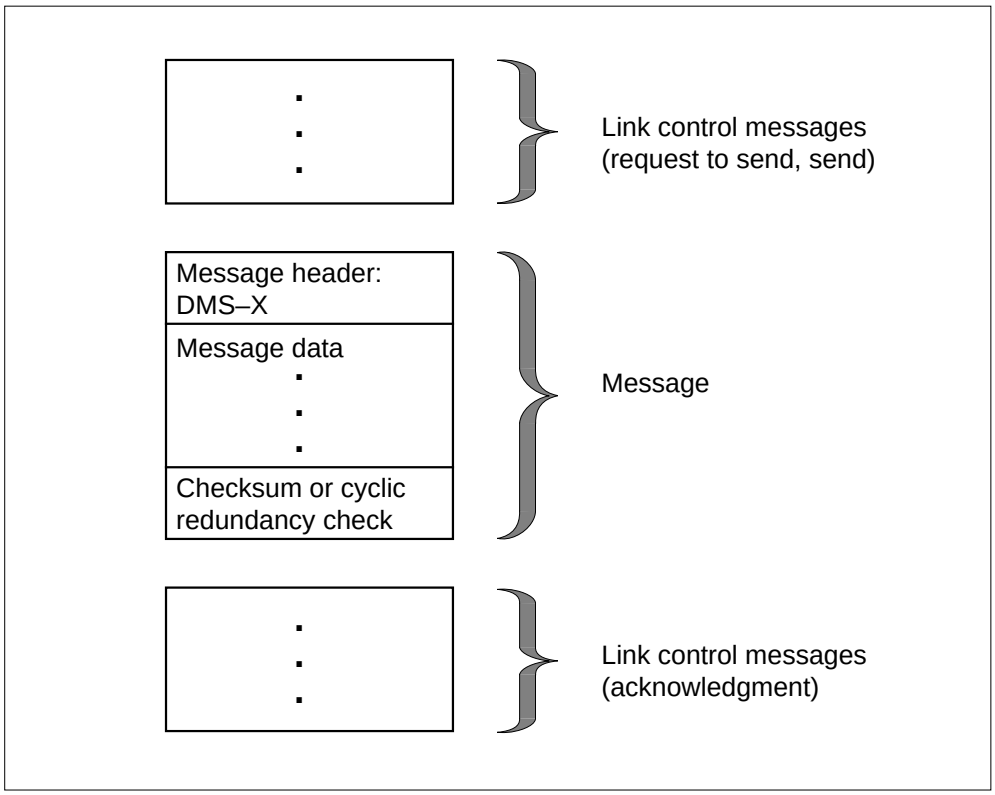

Message time-out and message checksum or CRC calculation perform message error. When protocol, checksum, or CRC failure on an outgoing message occurs, the sending node tries the send sequence again. On an incoming message failure, the sending node reroutes the message over an alternate control side (C-side) link. Hardware redundancies provide a minimum of one alternative path to and from a node. The format of DMS-X messages appears in the following figure.

Figure 4-6 DMS-X message format

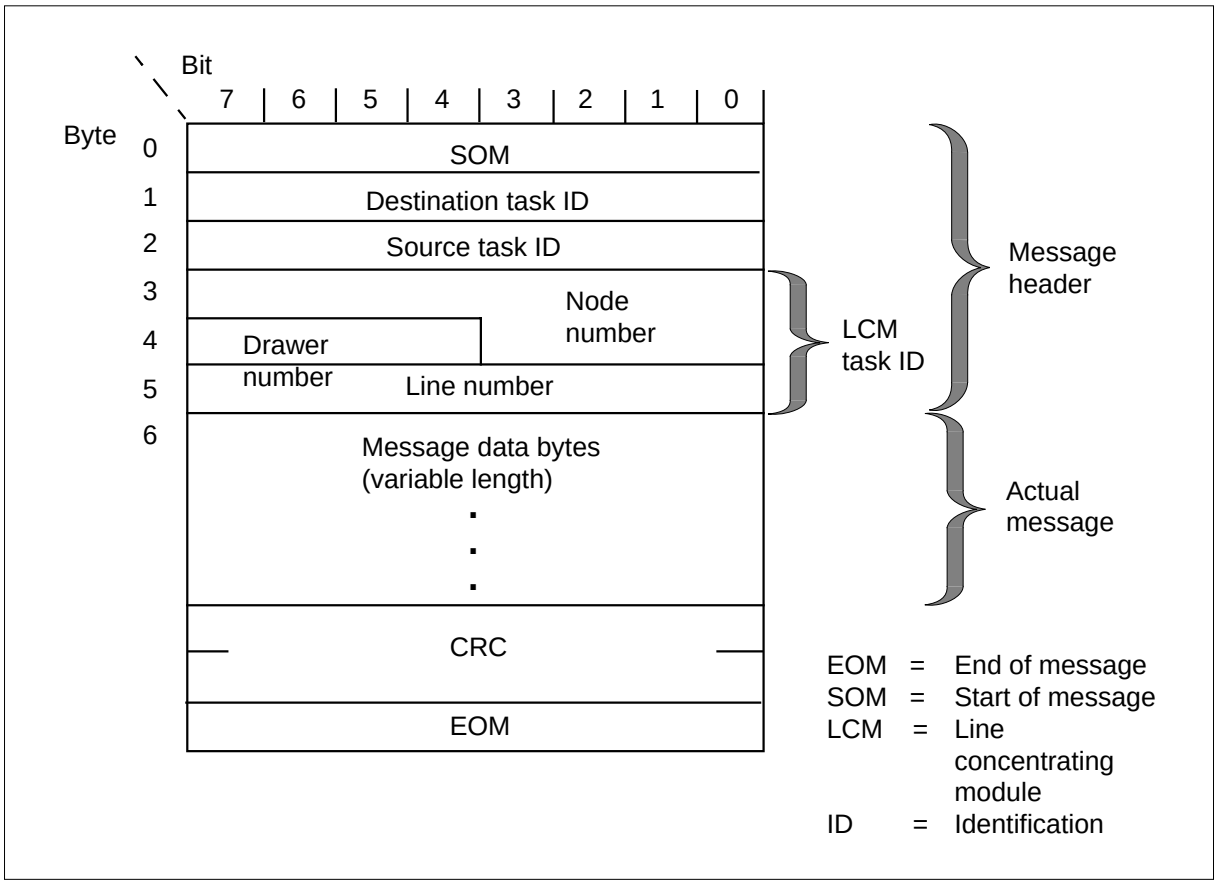

The system transmits the message over a link. Link control messages precede and follow the message. Messaging occurs between programs that execute in the SMU and in the RCU. Many tasks for processes communicate with the tasks with messages over the DS-1 links.

The DMS-X message header is the first six bytes as follows:

- The first byte is the start of message.
- The second byte is the destination task identification (ID) of the message. The system uses the ID in an outgoing message to identify the process to receive the message.
- The third byte is the source task ID. The system uses the ID in an incoming message to identify the process that sent the message.
- The last three bytes are the task ID number.

The number of bytes in the current message or data is variable. The CRC occupies two bytes. The CRC detects transmission errors. The end of message occupies one byte.

Q.931 Digital Network Access protocol

The system uses Q.931 signaling protocol for call control. The protocol procedure is based on the following:

- setup and takedown of calls and features between the network and terminals
- address displays and progress indicators at the terminal and the network
- B-channel control from the network

The Q.931 protocol supports basic error-handling procedures and re-initialization after recoverable errors occur. The Q.931 protocol also determines the signaling methods that circuit-switched calls use.

SMU signaling functions

Universal Tone Receiver (UTR) features The RCU lines subtending an SMU can use the optional UTR feature. The UTR feature allows a part of the processing load to be removed from the computing module (CM). After the load is removed, the UTR feature allows the load to be implemented in the PM.

If the UTR feature is present on the SMU, the SMU performs all digit collection functions. The SMU contains the originating terminal. The SMU performs the following functions:

- allocates the free receiver
- establishes a path to the receiver
- collects and processes digits
- deallocates the receiver

With a UTR, the CM conveys the need for a receiver to the SMU. The SMU then performs the following steps:

Procedure 4-1

1 Requests a UTR channel.

2 Instructs the UTR to start monitoring tones.

3 When monitoring starts, the system informs the SMU of digits. The SMU normally performs some translations functions on the digits.

4 When the receiver in not required, the SMU frees the allocated UTR channel.

The system requires a receiver request to start the sequence. If the request arrives from an SMU without the UTR, processing continues.

Peripheral processor (PP) SMU basic all processing

The PP SMU basic call processing supports software for basic call processing in an RCU. The RCU must use single-party (20 Hz ringing) and multiparty (divided ringing) line cards. Other features support FSR cards and special services. These features use foreign exchange with battery (FXB) cards or special service module channel units.

The PP SMU performs the following call processing activities:

- decodes and routes computing module call processing messages
- executes steps to originate a call from an RCU
- executes steps to terminate a call to an RCU
- establishes a speech connection from the DMS-100 network to an RCU
- tracks call information

To support these activities, the SMU and RCU must exchange system control messages over the DS-1 message channel. Each channel signaling messages use A- and B-bits from selected speech channels.

Call processing requires the following:

- origination and channel allocation
- tone generation with dial tone speed recording
- digit collection
- ringing
- automatic number identification
- loss padding
- messaging loss to RCU
- busy/return to service of lines

Origination and channel allocation

When the originating subscriber goes off-hook, a loop closure occurs. Current flows in the loop exceed a set threshold. The RCU line card detects the current.

The RCU uses the message channel to send an off-hook message to the SMU. This message contains the logical number loop time slot (LPTS). The LPTS associates with the subscriber line that has gone off-hook and the RCU group number where the subscriber belongs.

The SMU receives the RCU off-hook message. The SMU allocates a channel on a DS-1 link to serve the subscriber line that has gone off-hook.

The SMU uses the message channel to send the RCU a setup connection message. This message directs the RCU to set up a connection between the off-hook subscriber and the channel the SMU allocates. The message contains the LPTS, DS-1 line number, and DS-1 channel to associate.

The RCU sets up the physical connection. The RCU changes the A-bit from 0 to 1 to set the signaling bit pattern to off-hook (A=1, B=0). The RCU sends this pattern to the SMU. The RCU returns a setup connection acknowledgment message to the SMU in the message channel.

If the RCU encounters a problem with the association of the DS-1 channel and subscriber line, the RCU informs the SMU. The RCU informs the SMU in the return code of the setup connection acknowledgment message. For example, if the line to associate with the DS-1 channel connects to another channel, the RCU informs the SMU.

The SMU scans A- and B-bits incoming from the RCU to verify the off-hook. The off-hook pattern must continue for 360 ms for the SMU to treat the off-hook pattern as an origination. After 360 ms, the SMU reports an origination to the CM. The CM sets up a connection from the SMU time switch to the CM network over a DS30 channel.

Tone generation

After the CM receives the origination message, the CM directs the SMU to send a treatment to the subscriber. The most common treatment is dial tone.

The message and tones card in the SMU generates dial tone. The time switch card switches the tone to the correct DS-1 channel. The unified processor (UP) card directs this procedure. If the called line is busy, the message and tones card generates busy tone. The originating party receives the tone. Originating subscribers can receive other treatments, like reorder tone and announcements. The conditions present at the time that the subscriber places the call determines the type of treatment originating subscribers receive.

The SMU continuously monitors A- and B-bits from the RCU. The A-bit can return to 0 (on-hook) for a minimum of 480 ms. If this event occurs, the SMU interprets this event as a disconnect. The originating subscriber has gone on-hook. The SMU sends a disconnect message to the CM. The SMU also sends a take down connection message to the RCU. The RCU must return an acknowledgment message.

The exception to this disconnect occurs if the flash feature is enabled. With flash enabled, the on-hook signaling bit pattern must continue for 1440 ms. A on-hook signaling bit pattern must continue for more than 1440ms to enable the SMU to detect a disconnect.

A flash can be enabled and an off-hook subscriber can go on-hook for less than 360 ms followed by off-hook. If this event occurs, the flash is a glitch. The call connection remains. The subscriber can go on-hook for 360 ms or more and then go off-hook before 1440 ms expire. In this condition, the system treats the sequence as a flash. The dial tone speed recording (DTSR) sets the time period. The time period is 1440 ms from the time the subscriber first goes on-hook.

Digit collection

The subscriber phone set transmits dial pulse digits to the RCU as a series of makes and breaks. The series of makes and breaks are off-hooks and on-hooks. The RCU uses the A-signaling bit to indicate a make or break. For a make, the RCU sets the A-bit to 1. For a break, the RCU sets the A-bit to 0. To transmit the digit 6, for example, the RCU sends a series of six makes (A=1) and breaks (A=0) to the SMU.

For Digitone digits, the RCU encodes the digits into pulse code modulation (PCM). The RCU sends these PCM-encoded tones to a tone receiver. The tone receiver is present outside the SMU. The SMU collects the digits, builds them into a string, and forwards the digit string to the CM. The CM translates the digits and sets up a channel for the called line through the network. The SMU and RCU then set up a channel for the called subscriber to the originator channel setup.

Ringing

The SMU determines the type of ringing to use. The SMU sends a ringing signaling pattern to the RCU over the DS-1 channel. The DSC-1 channel associates with the subscriber line to ring. For example, the ringing pattern for single-party lines is A=1, B=0. This pattern directs the RCU to connect the ring generator to that line and ring the line.

The system does not transmit ringing signal pattern continuously. The system sends ringing (A=1, B=1) and idle (A=0, B=0) alternately. This procedure implements ringing cadences.

The SMU-RCU subsystem supports the following ringing abilities:

- single-party 20 Hz ringing
- multiparty divided 20 Hz ringing
- frequency selective ringing
- all available coded ringing designs
- ringing lines on all RCU modules supported off an SMU
- ringing a maximum of 50 lines in the same phase for each RCU. The system blocks calls above this number.

When the system rings a called line (terminating line), the originator receives ringback tone.

When the called subscriber goes off-hook, the RCU detects the change in line current and trips ringing. The RCU sends a pattern of A- and B-bits to the SMU to indicate that the subscriber answered the telephone.

The RCU sends an off-hook message to the SMU through the DS-1 message channel on link 3 or link 4. The SMU removes the ringing signal when the SMU receives the A- and B-bit signaling pattern to indicate off-hook. This pattern must continue for 180 ms. The SMU sends the CM an answer message if the A- and B-bit pattern remains as off-hook for 180 ms.

Automatic number identification

The DMS system uses ANI to determine which party, tip or ring, of a two-party line is off-hook. The ANI allows automatic billing.

The SMU call processing software provides this information on CM request. The SMU scans the A- and B-bits to detect which party has gone off-hook. The multiparty line card generates the bits. When a party goes off-hook, the RCU sends an off-hook message in the DS-1 message channel to the SMU. The off-hook message indicates which line has gone off-hook. The SMU directs the RCU to connect this line to a specified DS-1 channel. The SMU detects A- and B-bits on this channel. The SMU scans the A- and B-bits and determines how long the subscriber remains off-hook. The SMU also determines when the subscriber goes on-hook.

Loss padding

Padding or attenuation of pulse code modulation (PCM) samples occurs in the ring/pad card. The PCM samples compensate for expected signal loss through the network. The CM directs the SMU to apply padding to specified lines. The ring/pad card in the SMU provides the padding. The ring/pad card provides the time switch card under SP card direction and introduces the padding to appropriate channels.

Messaging loss

The following cause messaging loss for temporary or extended periods:

- message link failures
- RCU control extension (CE) card failures
- 24-hour switchover
- backup switchover

The system cannot detect new originations and disconnects through the message channel during messaging loss. The SMU cannot send messages to

the RCU. Messages to the RCU direct the RCU to set up or take down subscriber lines to DS-1 channel speech connections. New originations and terminations are not possible when a loss of messaging occurs.

The A- and B-bits are for ringing, digit collection, and hook-status scanning on established connections. These bits are not affected. The system maintains call processing for lines that have an established connection through the DMS-100 switch because of this condition. The system maintains calls in the following states:

- talking
- digit collection
- audible ringback
- flash
- ringing

The system takes down calls that terminate (go on-hook) during messaging loss. The system removes call connection in the DMS-100 switch when the system establishes messaging again.

Busy/return to service of subscriber lines

The CM can direct the SMU to have the RCU busy a subscriber line. This condition prevents call processing on the subscriber line and normally executes during maintenance. For example, a MAP command is entered from the line test position (LTP) level to test a line.

The CM can direct the SMU to return a line, or all lines of an RCU, to service. The SMU returns a line to service to enable call processing on the line.

Limits to call processing

The following limits apply to call processing (some of this data can vary):

- When a loss of messaging occurs, the system does not establish new calls.
- The SMU supports a maximum of 32 lines in the digit collection state at the same time.
- The SMU supports a maximum of four calls each second.
- The SMU supports a maximum of 255 lines in the ringing state at the same time.
- The RCU supports a maximum of 150 lines in the ringing state at the same time.

SMU-RCU coin operation

Coin operations begin when the CM sends the SMU a coin command for a coin card in the RCU.

The SMU translates these commands and sends the RCU signals. The RCU coin card translates these signals to voltages to send to the coin phone. The A- and B-bits and 8-bit PCM patterns are for the following:

- coin collect
- coin return
- coin presence
- partial coin presence
- ringing on coin telephones

The A- and B-bits send normal and reverse battery to coin telephones.

When the RCU receives the SMU signals, the coin card applies voltages, or opens to the tip and ring of the line. These electrical signals applied to the tips and rings of coin telephone lines cause the coin station to initiate actions. Actions include the return of a deposit to a station user or the collection of a deposit.

The system does not use coin collect, coin return, or coin presence tests for CSP lines. The system only uses reverse battery. The reverse battery allows an originator to hear the terminating party when the system applies the battery to a line. The terminating party cannot hear the originator.

When a subscriber (originator) goes off-hook on a CSP line, the system provides dial tone. After dialing is complete, the system sends reverse battery. When the originator hears the terminating party, a deposit occur. This event causes the restoration of the normal battery. The system also uses reverse battery for long distance calls.

The coin operation commands are as follows:

- coin collect—This command directs a coin first (CCF) or coin dial-tone first (CDF) telephone to collect money deposited for a telephone call. When the user first deposits coins the coins go to the hopper. The hopper is a temporary holding location where the telephone stores money before coin collect or coin return. When the system receives the coin collect command, the coins drop from the hopper into the coin vault.

  On coin telephones that require a flat rate, the system collects coins when the call completes. Coin telephones can connect to a switching system that

supports local coin overtime. For this type of telephone, the system collects coins every three minutes.

Coin semi-postpay (CSP) telephones collect coins automatically if the user deposits coins when a connection is set up. Coins deposited before the connection is set up can drop immediately into the return holder.

- check for partial coin presence (used in local coin overtime)—This command directs CDF telephones to check for the first deposit or stuck coins. This command also checks for stuck coins for CCF telephones.

  The CSP telephones or long distance calls does not use coin presence. The operator monitors tones to process long distance calls on CCF and CDF telephones. The telephone station generates the tones according to coins deposited.

- return coin—After the user deposits money, a coin return command directs the coin telephone to return the deposited money. The coin telephone returns the money when the calling party on a coin telephone hangs up before the terminating party answers.

  The SMU sends a coin return message to the RCU if any of the following events occur:

  — when channel reassignment occurs and the call cannot be assigned again

  — the call drops for a higher priority call

  — a call cannot connect because all channels are busy

  The system sends the message over the message channel of DS-1 links 3 or 4 and is necessary for coin return. A channel does not associate with a specified line on which a coin is to be returned.

  The CSP coin telephones only collect deposited coins when a call connection completes. The system disables the connection until the user deposits a coin.

- ring telephone station—This command directs the RCU to apply ringing to an appropriate station.

- reverse battery on coin line—This command is used on all types of coin telephones. This command prevents communication between the calling and called parties. This command also resets the telephone totalizer, prepares a telephone station for calling, and signals coin denominations to the operator. The telephone totalizer is an electromechanical device that totals initial rate deposits,

- supply normal battery on coin line—This command enables the talking state. Some CDF and CCF telephones use this command to reset the totalizer.

Coin operation limits and interactions

Some limits apply to coin functions and interactions between coin operations and other features of the SMU-RCU subsystem. The limits are as follows:

- The logical line equipment number (LEN) connections are consecutive. The LEN connections use the top four circuit numbers in a subgroup. The tip and ring connections skip every other LEN.
- The system cannot initiate coin telephone calls, like all calls, during warm SwAct or CP switchover. This condition occurs because messaging between the SMU and RCU is inhibited.

Coin operations interact with other features of the SMU-RCU subsystem in the following ways:

- If a DS-1 link fails, the system causes channel reassignment. The SMU sends a coin return message to the RCU. This event occurs if a coin line call occupies a channel on the failed link and cannot be assigned again. The telephone station user must receive money deposited earlier.
- When the RCU is busied, the RCU causes all subtending coin telephone stations to return coins to station users.
- When warm SwAct occurs, the addition of a call to the records of the newly active unit cannot occur. This call enters the talking state. This condition includes a coin call. The system drops the call. The system returns money deposited earlier to the telephone station user. This event occurs after the user originates again and hangs up.
- If one of the LTP-level commands force release one of the coin lines with FORCRLS or FRLS, the system busies the line. The coin telephone does not return money.

RCU to SMU signaling

The RCU uses A- and B-bits to return line statuses to the SMU. These statuses are idle, coin ground, off-hook, and coin ground. The following is an example of this condition. A coin presence test can check for the first deposit. In this condition, the expected response for a deposit that is present is coin ground. If the deposit does not occur, the response is off-hook.

SMU to computing module (CM) messages

The SMU responds to CM commands like coin collect, coin presence, partial coin presence, and coin return. The CM determines the next operation to initiate according to these responses.

Preparing to datafill SMU

PCL—New software delivery vehicle

After BCS 36, Northern Telecom begins to deliver Product Computing-Module Loads (PCL) instead of BCS releases or Universal Software Loads (USL).

A PCL contains features from the development stream software product for a specified application in a specified market. The PCL contains the abilities divided earlier between many related NTX packages. An eight-digit ordering code replaces the NTX package codes.

The ordering code and Functional Group name that the SMU requires appear in the following table. The table also contains a list of the former NTX package included in the Functional Group.

Table 4-2 SMU ordering code

Ordering code	Functional group name	Former NTX package codes
BAS00003	BAS Generic	NTX269AA—Universal Tone Receiver (Domestic)
BAS00016	BAS SCM/SMS /SMU	NTX387AD—SMU - Subscriber Carrier Urban NTX621AB—SMU Special Services

SMU static data update

The SMU static data update is required if following conditions occur:

- The addition, change, or deletion of links on the SMU P-side or C-side in tables RCUINV or LTCPSINV.
- The addition, change, or deletion of nodes that connect to the SMU or the links that associate with the nodes in tables RCUINV or LTCINV.
- The addition, change, or deletion of the cards in the card list of the SMU or the shelves in tables RCUINV, LTCINV, or LTCPSINV.
- The addition, change, or deletion of the exec data for the SMU in table LTCINV.
- The change of global office parameters that affect the SMU-RCU configuration.

When a static data update occurs, operating company personnel must keep the disruption of call processing to a minimum. Operating company personnel can use the following methods to update static data:

- Busy and return to service the SMU.
- Busy and return to service the inactive unit of the SMU and perform a cold SwAct.
- Perform two cold SwActs.
- Busy and return to service the inactive unit of the SMU with the NODATASYNC option. Perform a cold SwAct.

The system generates a PM128 log with the message `STATIC DATA MISMATCH WITH CC when the following events occur:`

- operating company personnel update static data for the CC at the CC
- operating company personnel did not update the static data at the SMU

At the SMU level of the MAP terminal, the response to command string QUERYPM FLT is the same message as the PM128 log. The required actions like the steps on how to update static data.

Static datalog tracking

Logs track changes made to tables RCUINV, LTCINV, and LTCPSINV. These logs are TUPC100, TUPC101, TUPC102, and TUPC103. These logs indicate datafill changes. As a result of these conditions, these logs provide a starting point to recreate, debug, and solve field problems. This feature is important because indications available at the time of service degradation are not always sufficient. Indications are not enough to diagnose the problem that occurs in the field.

Basic Call Processing

Functional group

Functional group: BAS00016

Feature package

Feature package: NTX387AC, AD, SCM Urban SCM BASE

Release applicability

XPM05 and later versions

Requirements

To operate, Basic Call Processing has the following requirements:

- Bilge, NTX000AA
- Common Basic, NTX001AA
- Universal Tone Receiver, NTX269AA
- New Peripheral Maintenance, NTX270AA
- Local Features I, NTX901AA

Description

Feature package NTX387AC is the basic software package for the Subscriber Carrier Module—Urban 100 (SMU). This package provides basic call processing capability for the subscriber lines connected to the remotes.

Feature package NTX387AC provides:

- line testing capability
- alarms processing
- coin capability
- user interface (I/F)
- operational measurements
- operator verification for remote carrier urban (RCU) lines
- basic maintenance features

Packages NTX750AB, integrated services digital network (ISDN) Basic Access and NTX106AA, Business Set Features can be installed in the office. If these packages are installed, NTX387AC provides ISDN and Meridian business set (MBS) services I as an option.

Feature package NTX387AD is an enhanced software package for the SMU. The NTX387AD has the capabilities of feature package NTX387AC.

Feature package NTX387AD also has the following characteristics:

- requires SMU to be provisioned with NT6X78AB CLASS Modem Resource (CMR) card
- requires SMU to be provisioned with NT6X69AD Tone ROM card
- is fully compliant with Bellcore specifications TR-30 and TR-575
- is capable of the following when employed in cooperation with acceptable customer premise equipment
  - — Feature Downloading receives, stores and manages a download of CPE-resident features that are executed at a later time
  - — Visual Screen List Editing (VSLE) uses visual display to show status, prompts and list information to edit at the CPE
  - — Call Logging provides an incoming callers data list to the subscriber
  - — Deluxe Spontaneous Call Waiting IDentification (DSCWID) provides the CLASS subscriber with Caller ID information during call waiting. The DSCWID also provides the subscriber with a selection of distribution options through softkeys to treat the call waited caller.

Operation

The SMU provides a digital I/F between a DMS-100 or DMS-100/200 digital switch and the RCU. Information about the SMU-RCU configuration must be in the inventory tables LTCINV, LTCPSINV and RCUINV.

This information stores data about the following to identify the SMU-RCU subsystem to the DMS-100 switch:

- the SMU C- and peripheral-side (P-side) links
- connections to the DMS-100 network ports and RCU ports
- SMU and RCU node numbers
- physical location within the office or remote site
- software load and execs

Information about subscriber lines must be in the lines inventory tables. These tables are tables LNINV, LENLINES, LENFEAT and LINEATTR.

A metallic test access (MTA) network can provide line testing capability. This network must be identified to the DMS-100 system. To identify this network,

Basic Call Processing (continued)

enter data in MTA tables. The MTA tables include the following: MTAMDRVE, MTAVERT, and MTAHORIZ. Operating company personnel can use these tables to link the subscriber loops and associated line cards to the equipment used for line testing.

The office alarm subsystem provides important information about fault conditions in the SMU-RCU subsystem. To identify the alarm subsystem to the DMS-100 system, operating company personnel must enter scan and signal distribution points. An office alarm unit (OAU) or a maintenance trunk module (MTM) in the office provides the scan and signal distribution points.

Operating company personnel can set a maximum of 12 spare alarms for RCU fault conditions (table RCUALRMS).

Maintenance circuits are provided for different maintenance functions in the SMU-RCU subsystem. These circuits include:

- line test units (LTU) for line testing
- jack access to external equipment
- headset circuits for monitoring purposes
- trunk test units (TTU)

The trunk tables TRKGRP, TRKSGRP and TRKMEM identify these circuits.

CLASS features

The SMU features bring DMS-100 the Spontaneous Call Waiting Identification (SCWID) into compliance with Bellcore specifications TR-30 and TR-350. These features also bring the Analog Display Services Interface (ASDI) into compliance with Bellcore specifications.

DMS recognition of the switching unit and all remote locations

Table SITE contains data that allows the DMS system to recognize the equipment for the switching unit. This data also allows the DMS system to recognize equipment for all remote locations that home on to the DMS system. This table defines the site names for the remote location. Table SITE uses codes entered in table CLLI for switching unit trunk groups and the remote

location. Table CLLI identifies the far end of each announcement, tone, trunk group, test trunk, national milliwatt test lines and service circuit.

DANGER

The system can reject an attempt to add or change tuples in any inventory table if table space or node resources are not available.

The system can reject changes in the inventory tables with Table Editor. The system displays a description and possible corrective actions. To BSY and RTS an XMS-based peripheral module (XPM) can defragment the node tables. This action frees required space. If XPM resources are not available, the following message appears.

Text CharFormat="Mono">The new node cannot be supported on Text><*XPMNAME*>

ACTION: Text CharFormat="Mono">None, resources have been exceeded on this XPM.Text>

Feature AF5678, XPM Node Table Sync Redesign, consolidates critical XPM node information in one table, PMNODES. The XPM units must maintain synchronization of internal node and port tables. To maintain synchronization, the computing module (CM) maintains a copy for each XPM unit. The XPM units do not have to derive any data for the internal node or port tables. The active XPM unit does not update the inactive unit tables that caused possible differences in the datafill of the tables. The CM downloads the same information to both XPM units when updates occur.

Note: Table PMNODES must appear as entered before any inventory tables in the datafill sequence list.

Translations table flow

Basic Call Processing translations does not affect table flow.

Limits

The NTX387AC package offers a subset of the feature capability package NTX387AD provides. The NTX387AD features are available for BCS37 (CSP02).

Interactions

Basic Call Processing has no functionality interactions.

Basic Call Processing (continued)

Activation/deactivation by the end user

Basic Call Processing does not require activation or deactivation by the end user.

Billing

Basic Call Processing does not affect billing.

Station Message Detail Recording

Basic Call Processing does not affect Station Message Detail Recording (SMDR).

Datafilling office parameters

The office parameters Basic Call Processing uses appear in the following table. For more information about office parameters, refer to *Office Parameters Reference Manual*.

Office parameters by Basic Call Processing (Sheet 1 of 2)

Table name	Parameter name	Description and action
OFCENG	GLOBAL_CUTOFF_ON_DISCONNECT	For all DMS-100 lines, this parameter controls the cutoff-on-disconnect (COD) option in the following ways: • Enabling. When the parameter is Y (Yes), global COD is enabled. • Duration. This is the length of time that all subscriber lines are interrupted. The duration is set in 10 ms intervals from 500 ms to 10 s. The default is 800 ms.
Note 1: When both global and separate COD options are enabled, the separate line option takes priority. ***Note 2:*** The accurate time duration for which the COD relay operates is a multiple of 120, not 100 s. For example, a datafill value of 100 (100 x 10 ms = 1 s) actually has a value of 120 (120 x 10 ms = 1.08 s).		

Office parameters by Basic Call Processing (Sheet 2 of 2)

Table name	Parameter name	Description and action
OFCVAR	CUTOFF_ON_DISC_TIME	This parameter controls the COD option for individual lines. The length of time that each subscriber line is interrupted is set in 10 ms intervals from 100 ms to 2 s. The default is 800 ms. (Note1 and Note 2)

OFCOPT	MAX_RCUS_PER_SMU	The MAX_RCUS_PER_SMU office parameter is part of the office options (OFCOPT) table. The parameter specifies the maximum number of RCU modules that can attach to an SMU. The range is 0 through 10. The default is 10. Nortel personnel enter the value.
		
		To attempt to datafill a larger number of RCU modules than the number for MAX_RCUS_PER_SMU results in the following message:
		
		`ONLY n RCUS ALLOWED ON SMU y`
		
		The n is the number of RCU modules and y is the SMU number.
		
		To attempt to change the parameter value to a number less than the number of RCU modules attached to an SMU results in the following message:
		
		`ALREADY n RCUS ON SMU y`
		
		The n is the number of RCU modules and y is the SMU number.

Note 1: When both global and separate COD options are enabled, the separate line option takes priority.

Note 2: The accurate time duration for which the COD relay operates is a multiple of 120, not 100 s. For example, a datafill value of 100 (100 x 10 ms = 1 s) actually has a value of 120 (120 x 10 ms = 1.08 s).

Datafill sequence

The tables that require datafill to implement Basic Call Processing appear in the following table. The tables appear in the corect entry order.

Basic Call Processing (continued)

Included are tables required to provide ISDN and MDC services. If the SMU provisioned does not support ISDN or MDC lines, these tables can be omitted from the datafill task.

Datafill tables required for Basic Call Processing (Sheet 1 of 4)

Table	Purpose of table
CLLI	Common language location identifier. This table identifies the maintenance and test trunks in the SMU-RCU subsystem.
SITE	Site table enables the DMS system to recognize the remote equipment tied to the host.
PMLOADS	Peripheral module (PM) loads. This table stores a load map between the load names and devices on which the loads reside. This function permits auto load to locate load files without the interruption of operating company personnel.
PMNODES	PM Nodes. The system automatically enters data in this read-only table. This action occurs when tuples are entered in the inventory tables. Information from table PMLOADS downloads to all XPM units that subtend the CM.
LTCINV	Line trunk controller inventory. This table inventories different PM types. These types include the SMU and do not include P-side link assignments.
CARRMTC	Carrier maintenance control table. This table allows the DMS switch administration to enter maintenance control information. The switch enters maintenance control information in peripherals, out-of-service limits (OLs), for alarms and system return-to-service (RTS) occurrences.
LTCPSINV	Line trunk controller P-side link inventory (LTCPINV). This table identifies the SMU module type and number and the port designation of the P-side links.
RCUINV	Remote carrier urban inventory. This table identifies the physical location of the RCU, central-side (C-side) links, SMU to which the links connect and related information.
DCHINV	The D-channel handler inventory. This table identifies the D-channel handlers (DCHs) in the SMU used for ISDN and MBS services.
ISGDEF	The ISDN service group definition. This table contains information on ISDN service group (ISG) numbers, PM type, services provided and channel allocation.
LTGRP	Logical terminal group. This table associates a logical terminal group name with the terminal types that can be entered in that group. This table is required for ISDN service.
Note: Data is entered in this table through SERVORD. No datafill procedure or example is available. Refer to *SERVORD Reference Manual* for an example that uses SERVORD to enter data in this table.	

Datafill tables required for Basic Call Processing (Sheet 2 of 4)

Table	Purpose of table
LTDEF (Note)	Logical terminal definition. This table defines logical terminals and the access privilege of these terminals. This table is required for ISDN service.
RCUALRMS	Remote carrier urban alarms. The RCUALARMS contains a list of a maximum of 12 spare alarm codes and text strings for the RCU.
TMINV	Trunk module inventory. The TMINV identifies the trunk modules that contain test circuits that terminate test pairs that connect to RCU lines.
TRKGRP	Trunk group. The TRKGRP identifies the test circuits associated with the maintenance and test trunks.
TRKSGRP	Trunk subgroup. This table lists the supplementary information for each subgroup that is assigned to one of the trunk groups the TRKGRP table lists.
TRKMEM	Trunk member. The TRKMEM identifies the circuits associated with the test equipment used to test lines and trunks.
ALMSCGRP	Alarm scan group. The ALMSCGRP records the circuit equipment, location, type of card. The ALMSCGRP serves as a head table for the respective scan points.
ALMSDGRP	Alarm signal distributor group. The ALMSDGRP records the circuit equipment, location and type of card. This table serves as a head table for the respective signal distributor points.
ALMSC	Alarm scan. The ALMSC identifies the functions each of the assigned scan points in the alarm scan groups will perform.
ALMSD	Alarm signal distributor point. The ALMSD identifies the function each of the assigned signal distributor points in the alarm signal distributor groups will perform.
SCGRP	Scan group. This table contains the product engineering code (PEC) and the physical location at the host or remote switching units for the scan groups. These scan groups are reserved for use as scan points for line features.
SDGRP	Signal distributor group. This table contains the PEC and the physical location at the host or remote switching units for the signal distributor groups. These signal distributor groups are reserved for use as signal distributor points for line features.
LTDSD	Local test desk signal distribution. This table identifies the signal distribution (SD) points used to drive the applique circuit during mechanized loop testing.

Note: Data is entered in this table through SERVORD. No datafill procedure or example is available. Refer to *SERVORD Reference Manual* for an example that uses SERVORD to enter data in this table.

Basic Call Processing (continued)

Datafill tables required for Basic Call Processing (Sheet 3 of 4)

Table	Purpose of table
THOUGRP	Thousands group. This table contains definitions of the directory numbers that terminate in the office in groups of 1000.
LINEATTR	Line attribute. This table assigns line attributes to regular lines in the LENLINES table, Meridian stations and attendant consoles in the MDC translations tables.
LNINV	Line circuit inventory. This table retains an inventory of subscriber lines and associated line cards for RCU modules.
IBNLINES (Note)	The IBN line assignment. This table defines the line assignments for each MDC station number.
IBNFEAT (Note)	The IBN line features. This table defines the line features assigned to the MDC lines that appear in table IBNLINES.
KSETINV (Note)	Business set and data-unit inventory. This table stores inventory data for each line card slot assigned to Meridian business sets, ISDN sets and data units.
KSETLINE (Note)	Business set and data-unit line assignment. This table defines the data for directory number appearances on Meridian business sets, ISDN sets and data units.
KSETFEAT (Note)	Business set and data-unit feature. This table defines the line features assigned to the business sets and data units. These line features appear in table KSETLINE.
LTMAP	Logical terminal map. This table associates logical terminals with a service access. The access privilege assigned determines the service access. This table is required for ISDN service.
SPECCONN	A P-side to P-side special connection. This table enters special connections to provide ISDN and MBS services.
HUNTGRP (Note)	Hunt group. This table stores the data for the hunt groups assigned in the switching unit.

Note: Data is entered in this table through SERVORD. No datafill procedure or example is available. Refer to *SERVORD Reference Manual* for an example that uses SERVORD to enter data in this table.

Datafill tables required for Basic Call Processing (Sheet 4 of 4)

Table	Purpose of table
LENLINES (Note)	Line assignment. This table contains the following data for each line: • site name, if the line is remote • line equipment number (LEN) • the party to which the directory number is assigned • the ringing code assigned to the directory lines • directory number • signal type • index into the Line Attribute table • list of options
LENFEAT (Note)	Line feature. This table contains the features assigned to a specified line in the LENLINES table.
HUNTMEM (Note)	Hunt group member. This table contains the members assigned to the Hunt Groups that appear in table HUNTGRP.
DNROUTE	Directory number route. This table contains the directory numbers that are not associated with a LEN. The numbers are the result of operating company input.
WRDN	Stores the directory number that are not associated with an LEN. The numbers are the result of operating company input.
HNPACONT	Home numbering plan area. The HNPACONT lists the HNPA subtables.
MTAMDRVE	Metallic test access minibar driver. This table identifies the physical location and the type of the minibar driver assigned to the minibar switch.
MTAVERT	Metallic test access vertical connection table. This table identifies the vertical connectivity to the metallic test access (MTA) matrix.
MTAHORIZ	Metallic test access horizontal connection table. This table contains the assignment to a horizontal and horizontal group of MTA minibars (MTAM).
Note: Data is entered in this table through SERVORD. No datafill procedure or example is available. Refer to *SERVORD Reference Manual* for an example that uses SERVORD to enter data in this table.	

Datafilling table CLLI

The datafill for Basic Call Processing for table CLLI appears in the following table. Only the fields that apply directly to Basic Call Processing appear.

Basic Call Processing (continued)

For a description of the other fields, refer to the data schema section of this document.

Datafilling table CLLI (Sheet 1 of 2)

Field	Subfield or refinement	Entry	Description and action
CLLI		alphanumeric	Common language location identifier. This 16-character field identifies the far end of the following: • announcement, • tone • trunk group • test trunk • national milliwatt test lines • service circuit The recommended subfields are PLACE, PROV, BLDG, TRAFUNIT, and SUFX.
	PLACE	character	Place. This four-character code identifies the name of the city or town at the far end of each group.
	PROV	character	Province or State. This two-character code identifies the province or state at the far end of the trunk group.
	BLDG	character	Building. This two-character code identifies the building number at the far end of the trunk group.
	TRAFUNIT	character	Traffic unit. This three-character code identifies the destination of the traffic unit at the far end of the trunk group.
	SUFX	character	Suffix. This one-character code identifies each trunk group that terminates at the same CLLI location.
Note: The SIZE field in the data size (DATASIZE) table allocates memory for the entry with field DATSKEY equal to CLLI.			

Datafilling table CLLI (Sheet 2 of 2)

Field	Subfield or refinement	Entry	Description and action
ADNUM		numeric	Administrative trunk group number. Enter a number from 0 to a number one less than the size of table CLLI that appears in table DATASIZE. The value must be unique.
TRKGRSIZ		character	Trunk group size. This four-character field is equal to the maximum quantity of trunk members that are expected to be assigned to the trunk group.
ADMININF		alphanumeric	Administrative information. The operating company uses this 32-character field to record administrative information. The switching unit does not use the information in this field. The recommended subfields are TRAFCLS, OFFCLS, and TRKGRTYP.
	TRAFCLS		Trunk group traffic class. This field is optional input for administrative purposes only.
	OFFCLS		Office class. This field is optional input for administrative purposes only.
	TRKGRTYP		Trunk group type. This field is optional input for administrative purposes only.
Note: The SIZE field in the data size (DATASIZE) table allocates memory for the entry with field DATSKEY equal to CLLI.			

Datafill example for table CLLI

Sample datafill for table CLLI appears in the following example.

MAP example for table CLLI

```
      CLLI  ADNUM  TRKGRSIZ                    ADMININF
-------------------------------------------------------
MTADRIVER    250     32  METALLIC_TEST_ACCESS_DRIVER
  MONTALK    254      32                VERIFICATION
   MJACK     257     256               METALLIC_JACK
     LTU     259      32              LINE_TEST_UNIT
```

Basic Call Processing (continued)

Datafilling table SITE

The datafill for Basic Call Processing for table SITE appears in the following table. Only fields that apply directly to Basic Call Processing appear. For a description of the other fields, refer to the data schema section of this document.

Table SITE contains data for the switching unit and for all remote locations that home on to the unit. Before an LEN can be assigned and before a PM can be entered, data must be entered in table SITE. This action allows the DMS-100 switch to recognize the equipment.

The first entry in table SITE must be HOST for the host switching unit. The operating company defines the site names.

Datafilling table SITE (Sheet 1 of 2)

Field	Subfield or refinement	Entry	Description and action
NAME		alphanumeric	Site name. Enter the site name assigned to the remote switching unit. The first character must be alphabetic. Site names can be a maximum of four characters in length. The PM type names cannot be used for site names. ***Note:*** The first entry in this field is for the host switching unit.
LTDSN		00 to 99	The LEN test desk site number. Enter a two-digit number required to dial the site that appears under field NAME.
MODCOUNT		0	Module count. Enter zero (0).
OPVRCLLI		alphanumeric	Operator verification CLLI. Enter the CLLI assigned to the operator verification trunk group at the remote location.
ALMDATA		see subfields	Alarm data. This field is for remote locations only and contains subfields ALMTYPE, TMTYPE, TMNO, TMCKTNO, POINT and CONTMARK.
ALMDATA (continued)	ALMTYPE	CR, MJ, MN, or NA	Alarm type. Enter the alarm type: critical (CR), major (MJ), minor (MN) or NA.
Note: The system allocates memory for a maximum of 32 sites.			

Datafilling table SITE (Sheet 2 of 2)

Field	Subfield or refinement	Entry	Description and action
	TMTYPE	character	Trunk module type. Enter the trunk module type (remote service module) where the miscellaneous signal distributor point assigned to the alarm is located.
	TMNO	0 to 2047	Trunk module number. Enter the number assigned to the remote service module where the miscellaneous signal distributor point assigned to the alarm is located.
	CKTNO	0 to 29	Trunk module circuit number. Enter the trunk module circuit on the remote service module where the miscellaneous signal distributor point assigned to the alarm is located.
	POINT	0 to 7	Signal distributor point number. Enter the signal distributor point number within the trunk module circuit number that is assigned to the alarm.
	CONTMARK	+ or $	Continue mark. Enter a plus (+) symbol when additional data for the site is specified on the next record. When additional data is not specified, enter a dollar sign ($) to terminate this vector.
Note: The system allocates memory for a maximum of 32 sites.			

Datafill example for table SITE

Sample datafill for table SITE appears in the following table.

MAP example for table SITE

```
          NAME
LTDSN          MODCOUNT       OPVRCLLI
                                                ALMDATA
-------------------------------------------------------
          REM1
   01               0           REM19
                                        CR MTM 0 4 0 $
```

Basic Call Processing (continued)

Datafilling table PMLOADS

Table PMLOADS stores the device location of every PM loadfile. This action allows the XPM automatic loading feature to locate load files without the intervention of operating company personnel.

Table PMLOADS lists the active and backup loadfiles. The active loadfile is always the default load used with the LOADPM command and most system activities. The backup loadfile is used if a problem occurs when the active loadfile is loaded or returned to service. The backup loadfile is always the unpatched loadfile that Nortel ships. The active and backup loadfiles are used to apply and remove patches.

Table PMLOADS stores data for the following:

- the name of the active load file. This load file is the default load used with the LOADPM command and different activities the system initiates.
- the name of the backup loadfile. This loadfile is the load used if a problem occurs when the active loadfile is loaded or returned to service. The backup loadfile is always the unpatched loadfile shipped with the SMU.
- the file locations
- the update active loadfile field that indicates if the site requires the active field updated automatically. The feature allows the patched loadfile to load into the SMU if a reload is necessary. This reload simplifies reload and recovery of the SMU. If loadfile patching is enabled, the active file information is updated through loadfile patching.

The system uses the active and backup files as part of loading and recovery.

The SMU load files must be entered in table PMLOADS before these files can be entered in inventory table LTCINV. The inventory table enforces this rule.

Note: During the first datafill and a dump and restore, an exception to this rule occurs. When these events occur, tuples in table PMLOADS are added automatically when LTCINV tuples are added.

The datafill for Basic Call Processing for table PMLOADS appears in the following table. Only the fields that apply directly to Basic Call Processing appear.

Datafilling table PMLOADS

Field	Subfield or refinement	Entry	Description and action
LOADNAME		character	Indicates PM loadname. Enter the XPM load name. The range is a maximum of 32 characters. This loadname must equal the load name table LTCINV specifies.
ACTFILE		character	Indicates active loadfile name. The name of the active XPM loadfile. The range is a maximum of 32 characters. Before patching, this name is the original load name. The XPM loadfile patching updates the field after the load is patched for a period of time or soak time.
ACTVOL		character	Active volume. Identifies the device that shows the active loadfile. The range is the set of disk drive unit (DDU) volumes and system load module (SLM) disks that are available to the CM, S00DXPM. The range is a maximum of 16 characters.
BKPFILE		character	Backup loadfile name. This field identifies the name of the backup XPM loadfile. This name must be the same name as the LOADNAME field. The range is a maximum of 32 characters.
BKPVOL		character	Backup volume. The device that stores the backup loadfile. The range is the set of DDU volumes and SLM disks that are available on the CM, S00DXPM. The range is a maximum of 16 characters.
UPDACT		Y or N (no)	Update active filename. This field controls if the loadfile is qualified for loadfile patching. This field controls if the system must perform an automatic update table PMLOADS fields ACTFILE and ACTVOL, with the patched loadfile name. The range of values are Y or N. For BCS36, the value is forced to N.

Basic Call Processing (continued)

Datafill example for table PMLOADS

Sample datafill for table PMLOADS appears in the following example:

MAP example for table PMLOADS

```
         LOADNAME
         ACTFILE     ACTVOL
         BKPFILE     BKPVOL      UPDACT
---------------------------------
         ESC02CVJ
         ESC02CJ     S001DXPM
         ESC02CJ     S001DXPM        N
```

Datafilling table PMNODES

Table peripheral module nodes (PMNODES) is read only. The CM uses PMNODES to control XPM unit node tables. The system automatically enters data in table PMNODES when entries are added or changed in inventory tables. An entry is present in table PMNODES for all subtending nodes of each XPM. Fields are updated to reflect CM control of configuration data tables (CDTs) in the XPM nodes. As nodes are deleted, holes can appear in the table. These holes do not always fill when a new node is added. Tuples in table PMNODES are managed so that all subtending nodes must have a higher index than the head node.

Datafilling table PMNODES for SMU basic operation (Sheet 1 of 4)

Field	Subfield or refinement	Entry		Description and action
TABKEY		0 to 4096 to 117	0	Table key. Two-part key that a space separates. This key identifies the XPM where the unit node table is. The first part is host external node number. The second part is internal index number. For example the first key of a line trunk controller (LTC) with an external node number of 25 is 25 1. The key of the first XPM attached to the LTC is 25 2.
EXTNDNUM		0 to 4096		External node number. External number assigned by CM to the XPM identified in field TABKEY. For example, the first XPM above can be an SMU with an external node of 24. With an external node of 24, the key of 25 2 must reference XPM external node 24 in the LTC node tuple.

Datafilling table PMNODES for SMU basic operation (Sheet 2 of 4)

Field	Subfield or refinement	Entry	Description and action
NODETYPE		Refer to list	Node type of XPM. Generic type of PM node. The types include LTC_NODE, SMU_NODE, RCU_NODE, and RCS_NODE, default is NIL_NODE.
PMTYPE		Refer to list	The PM type. Exact PM type assigned to the node. The PM types include remote cluster controller 2 (RCC2), enhanced line concentrating module (LCME), subscriber carrier module-100S remote (SMSR), LTC, SMU, RCU.
LEVEL		0 to 15	The PM level. The number of device levels the XPM node is separated from the messaging host. The level begins at zero for messaging head XPMs. An example is an RCU at level 2, attached to the SMU at level 1, that attaches to the HOST LTC at level 0.
MSGHOST		0 to 4095	Messaging host. External node responsible for the transfer of messages to this node. A messaging host must transfer messages. External nodes can be LTC and remote cluster controller (RCC). Examples of XPMs that cannot transfer messages are RCU and SMSR.
PHYSHOST		0 to 4095	Physical host. External node that attaches to this XPM node. An example is the SMU attaches to the LTC at external node 25.
PORTS		0 to 127	Number of ports. Total number of P-side ports in the physical host this XPM node requires.
STPORT		0 to 255	Starting port. First P-side port in the physical host this XPM node uses.
TERMS		0 to 4095	Number of terminals. Total number of terminals in the physical host this XPM node requires.
STTERM		0 to 8675	Starting terminal. This terminal is the first terminal in the physical host this XPM node uses.

Basic Call Processing (continued)

Datafilling table PMNODES for SMU basic operation (Sheet 3 of 4)

Field	Subfield or refinement	Entry	Description and action
PROTOCOL		alphanumeric	Message protocol. Type of message protocol the physical host uses to node links. The message protocol can be MDS30, MDMSX or MHDLC.
MS		M or S	Master or slave. The M appears if this node contains the master clock.
IPML		Y or N	Inter-peripheral message link (IPML). Enter Y if this node is configured as part of an IPML.
MODE		T or P	Table entry mode. Entries in table are made by terminal (T) or port (P) indexing.
SLLCON		Y or N	Site line load control. Enter Y if this node is at a site that uses Essential Line Service Protection (ESP) or other site line load control features.
NT6X28		N	Uses NT6X28 card. Enter Y if this XPM uses the NT6X28 card. The NT6X28 signaling I/F card is used on the International Digital Trunk Controller (IDTC). Always enter N.
LCMLGMEM		N	Line concentrating module (LCM) large memory. Enter Y if this XPM is an LCM with large memory, 256 kbyte. Enter N.
RSVPORTS		Y or N	Reserved ports. Enter Y if this XPM has ports reserved for messaging.
RSVTERMS		Y or N	Reserved terminals. Enter Y if this XPM has terminals reserved for messaging.
MATENODE		Y or N	Mate node. Enter Y if this node is part of a dual configuration.
PACKED		Y or N	Packed internal tables. Enter Y if internal node tables are packed on this node. Before this feature the node table was compressed when the XPM was RTS with the NODATASYNC option. Compression only happens when both units of an XPM are taken out-of-service (OOS) and the CM loads these units.

Datafilling table PMNODES for SMU basic operation (Sheet 4 of 4)

Field	Subfield or refinement	Entry	Description and action
SUPPCDT		Y Y	Support CDT. Enter Y for each unit if CDT management is supported.
CMINCTRL		Y or N	The CM node control. Enter Y if the node is under CM control.

Datafill example for table PMNODES

Datafill for an LTC node with an SMU node connected and an RCU connected to the SMU appear in the following examples:

MAP example for table PMNODES (LTC tuple)

```
Table: PMNODES

  TABKEY  EXTNDNUM   NODETYPE   PMTYPE LEVEL MSGHOST  PHYSHOST  PORTS
  25   1        25   LTC_NODE      LTC      0     25        25     16

STPORT  TERMS STTERM  PROTOCOL MS IPML MODE SLLCON NT6X28 LCMLGMEM RSVPORTS
     0    641      1   MDS30   S    N    P      N      N        N        Y

RSVTERMS MATENODE  PACKED SUPPCDT CMINCTRL

       Y        N      Y       YY        Y
```

MAP example for table PMNODES (SMU tuple)

```
Table: PMNODES

  TABKEY  EXTNDNUM   NODETYPE   PMTYPE LEVEL MSGHOST  PHYSHOST  PORTS
  24   1        24   LTC_NODE      SMU      0      24        24     16

STPORT  TERMS STTERM  PROTOCOL MS IPML MODE SLLCON NT6X28 LCMLGMEM RSVPORTS
    0     641      1     MDS30  M    N    P      N      N        N        Y

RSVTERMS MATENODE  PACKED SUPPCDT CMINCTRL

       Y        N       Y      YY        Y
```

Basic Call Processing (continued)

MAP example for table PMNODES (SMU to RCU tuple)

```
Table: PMNODES

  TABKEY  EXTNDNUM   NODETYPE   PMTYPE LEVEL MSGHOST  PHYSHOST  PORTS
  24   2        34   SMU_NODE      RCU     1      24        24      8

STPORT  TERMS STTERM  PROTOCOL MS IPML MODE SLLCON NT6X28 LCMLGMEM RSVPORTS
    16    610    642     MDMSX   M   N    P       N      N        Y        N

RSVTERMS MATENODE  PACKED SUPPCDT CMINCTRL

       N       N        Y      YY        Y
```

Note: Each XPM node in the link with messaging skills has a tuple in table PMNODES to address the SMU.

Datafilling table LTCINV

The datafill for Basic Call Processing for table LTCINV appears in the following table. Fields that apply directly to Basic Call Processing appear.

For a description of the other fields, refer to the data schema section of this document.

Table LTCINV contains the inventory data. This data does not include P-side link assignments, table LTCPSINV, for different PM types. These PM types include the SMU.

Datafilling table LTCINV (Sheet 1 of 8)

Field	Subfield or refinement	Entry	Description and action
LTCNAME		Refer to subfields	The LTC name. This field contains subfields XPMTYPE and XPMNO.
	XPMTYPE	character	The PM type. Enter the type of PM, in this condition, SMU.
Note: The system allocates memory for a maximum of 128 tuples for table LTCINV. Memory is allocated as required to allow a maximum sum of 210 tuples in tables LTCINV and LTCRINV combined.			

Datafilling table LTCINV (Sheet 2 of 8)

Field	Subfield or refinement	Entry	Description and action
	XPMNO	0 to 255	The PM number. Enter the PM number. ***Note:*** Operating company personnel can number the XPMs from 0 to 255 but the total number of tuples in tables LTCINV and LTCRINV combined cannot exceed 210 XPMs. The XPM types can be any combination of types accepted by the two tables.
ADNUM		1 to 4095	Administration number. The Engineering and Administrative Data Acquisition System for Data Collection (EADAS/DC) uses this number to identify nodes in the DMS-100 family switch. This number remains fixed over dump and restore.
FRTYPE		SME	Frame type. Enter the frame type where the PM equipment is mounted.
FRNO		0 to 511	Frame number. Enter the frame number of the SME.
SHPOS		18, 32, 51, or 65	Shelf position. Enter the position of the shelves on the frame in inches above the floor level.
FLOOR		0 to 99	Floor. Enter the floor where the PM equipment frame is located.
ROW		character	Row. Enter the row on the floor where the PM equipment frame is located. The range is A-H, J-N, P-Z, AA-HH, JJ-NN, or PP-ZZ.
FRPOS		0 to 99	Frame position. Enter the position in the row of the PM equipment frame.
Note: The system allocates memory for a maximum of 128 tuples for table LTCINV. Memory is allocated as required to allow a maximum sum of 210 tuples in tables LTCINV and LTCRINV combined.			

Basic Call Processing (continued)

Datafilling table LTCINV (Sheet 3 of 8)

Field	Subfield or refinement	Entry	Description and action
EQPEC		alphanumeric	Equipment PEC. Enter the product engineering code of the PM. The range of options for this field includes 6X02DG, 6X02EB, 6X02EE and 6X02EL. ***Note:*** If optional card ISDN signaling preprocessor (ISP) is provisioned, 6X02EL is required.
LOAD		character	Load name. Enter the name given to the issue of PM software. ***Note:*** Make sure the load filename for the SMU and the CMR card are entered in table PMLOADS before the load names are entered in table LTCINV.
EXECTAB		Refer to subfields	Indicates executive table. This field contains subfields TRMTYPE, EXEC and CONTMARK. Vector from one to eight. ***Note:*** Changes to fields with multiple entries must be made in the PROMPT mode only.
EXECTAB (continued)	TRMTYPE	character	Terminal type. Enter the type of PM terminals used. Enter plain old telephone service (POTS) for normal lines and KEYSET for key sets.
	EXEC	character	Executive programs. Enter the set of executive programs the PM indicates the TRMTYPE field requires. For example, use POTSEX to provide POTS and KSETEX to provide ISDN and MBS services. ***Note:*** Keyset KSETEX can only be assigned to SMUs with an enhanced ISDN signaling preprocessor (EISP) card.

Note: The system allocates memory for a maximum of 128 tuples for table LTCINV. Memory is allocated as required to allow a maximum sum of 210 tuples in tables LTCINV and LTCRINV combined.

Datafilling table LTCINV (Sheet 4 of 8)

Field	Subfield or refinement	Entry	Description and action
	CONTMARK	+ or $	Continuation mark. Enter a plus sign (+) when the vector continues on the next line. When the vector does not continue to the next line, enter a dollar sign ($) to end the vector.
CSLNKTAB		Refer to subfields	C-side link table. For switches equipped with the old junctored network (JNET), this field contains subfields NMPAIR, NMPORT and CONTMARK. For switches equipped with the new enhanced network (ENET), this field contains subfields ENPAIR, ENSLOT, ENLINK and CONTMARK. ***Note:*** Changes to fields with multiple entries must be made in the PROMPT mode only.
	NMPAIR	0 to 31	Network module (NM) pair number. Enter the network link where the PM is assigned that corresponds to the provisioned C-side links of the PM.
	NMPORT	0 to 63	Network port number. Enter the network port that corresponds to the above link.
CSLNKTAB (continued)	ENPAIR	0 to 3	The ENET pair number. Enter the network link where the PM is assigned, that corresponds to the provisioned C-side links of the PM.
	ENSLOT	10 to 16, or 25 to 32	The ENET slot number. Enter the crosspoint slot number where the PM is assigned, that corresponds to the provisioned C-side links of the PM.
	ENLINK	0 to 18	The ENET link number. Enter the link on the crosspoint where the PM is assigned, that corresponds to the provisioned C-side links of the PM.
Note: The system allocates memory for a maximum of 128 tuples for table LTCINV. Memory is allocated as required to allow a maximum sum of 210 tuples in tables LTCINV and LTCRINV combined.			

Basic Call Processing (continued)

Datafilling table LTCINV (Sheet 5 of 8)

Field	Subfield or refinement	Entry	Description and action
	ENDS30	0 to 15	Enhanced network DS30. All entries must be contiguous from zero. No entry can be duplicated, default is 0 for DS30 and 0 for fiber links.
	CONTMARK	+ or $	Continuation mark. Enter a plus sign (+) when the vector continues on the next line. When the vector does not continue on the next line, enter a dollar sign ($) to end the vector.
Note: The system allocates memory for a maximum of 128 tuples for table LTCINV. Memory is allocated as required to allow a maximum sum of 210 tuples in tables LTCINV and LTCRINV combined.			

Datafilling table LTCINV (Sheet 6 of 8)

Field	Subfield or refinement	Entry	Description and action
OPTCARD		alphanumeric	Indicates optional card. The range of values for SMU includes MSG6X69, ISP, CMR13 or CMR16, and UTR15 or UTR17. See note 1. ***Note:*** Changes to fields with multiple entries must be made in the PROMPT mode only. If ISP is entered, the correct CMR entry is CMR13. If the CMR option is entered, the system also prompts the user to enter the CMR software load name in the PROMPT mode. If ISP is entered, the correct CLASS. Refer to note below. Universal tone receivers (UTRs) can be defined for valid spare card slots 15 or 17. If two UTRs are required, both UTR15 and UTR17 must be entered. If only one UTR is required, UTR15 or UTR17 can be entered. These cards can be entered if the same slot is populated in both units of the ISDN/MBS SMU. Refer to note 2. If NT7X05AA is entered, the system prompts for the slot number. Optional slot numbers include 13,15,16,17, and 19. ***Note 1:*** After the EISP card is provisioned this card cannot be removed. The whole tuple must be deleted. ***Note 2:*** If a line appearance on a digital trunk public safety answering point (LDTPSAP) subtends the SMU, the UTR cannot be added. ***Note:*** The CMR load name must be entered in table PMLOADS before the name is entered in the LOAD field of table LTCINV.
Note: The system allocates memory for a maximum of 128 tuples for table LTCINV. Memory is allocated as required to allow a maximum sum of 210 tuples in tables LTCINV and LTCRINV combined.			

Basic Call Processing (continued)

Datafilling table LTCINV (Sheet 7 of 8)

Field	Subfield or refinement	Entry	Description and action
CMRLOAD		alphanumeric	The CMR load. This is a vector of a maximum of eight alphanumeric characters that indicate the appropriate CMR software load name. ***Note:*** The CMR load name must be entered in table PMLOADS. This entry must occur before the load name is entered in the LOAD field of table LTCINV.
CONTMARK		+ or $	Indicates continuation mark. Enter a plus sign (+) when the vector continues on the next line. When the vector does not continue on the next line, enter a dollar sign ($) to end the vector.
TONESET		alphanumeric	Tone set. Enter the correct tone set for the switch being entered.
PROCPEC		alphanumeric	Processor equipment PEC. Enter the two PECs of the MX77 card. One PEC is required for each unit of the SMU. Enter the PEC for unit 0 first. The PEC entered for a unit must correspond to the minimum firmware capabilities in the processor complex of each unit. The PEC for the SMU is MX77AA.
E2LOAD		alphanumeric a maximum of 8 characters	Indicates electrically erasable programmable read only memory. This memory contains the name of the loadfile loaded in the NTMX77AA EEPROM. ***Note:*** The PMLOAD filename must be entered in table PMLOADS. This entry must occur before data is entered in field E2LOAD in table LTCINV.

Note: The system allocates memory for a maximum of 128 tuples for table LTCINV. Memory is allocated as required to allow a maximum sum of 210 tuples in tables LTCINV and LTCRINV combined.

Datafilling table LTCINV (Sheet 8 of 8)

Field	Subfield or refinement	Entry	Description and action
OPTATTR		character	Optional attribute. This vector is entered for Digital Trunk Controller (DTC) PMs only. Enter a dollar sign ($) to end the vector.
PEC6X40		alphanumeric	The 6X40 equipment PEC. Enter the version to the 6X40 card in the peripheral. The range is 6X40AA, 6X40AB, 6X40AC, 6X40BA, 6X40CA or 6X40FA. For ISDN enter 6X40AC. The default is 6X40AA. The value entered appears in error messages when a defective card is detected. For the ISDN/MBS SMU, enter 6X40AC.
Note: The system allocates memory for a maximum of 128 tuples for table LTCINV. Memory is allocated as required to allow a maximum sum of 210 tuples in tables LTCINV and LTCRINV combined.			

Datafill example for table LTCINV

Sample datafill for table LTCINV appears in the following example:

MAP example for table LTCINV

```
LTCNAME
   FRTYPE  FRNO  SHPOS  FLOOR  ROW  FRPOS  EQPEC      LOAD
                                                       EXECTAB
                                                        CSLNKTAB
                                                         OPTCARD
TONESET      PROCPEC
                                                          OPTATTR
PEC6X40
_____________________________________________________________
SMU 0
      SME   0    32   0    C    1 6X02AA    ESU06AZ
                                             (POTS POTSEX)$
                             ( 0 40) ( 0 42) ( 1 40) ( 0 30)$
                            ( MSG6X69 )(UTR17)
(   CMR16 CMR33AI5) ( NT7X05AA 13)$
NORTHAA    MX77AA MX77AA

6X40AC
```

Basic Call Processing (continued)

Datafilling table CARRMTC

The data entry for table CARRMTC appears in the following procedure. Table CARRMTC allows the DMS-100 switch administration to enter the following:

- maintenance control information in peripherals
- out-of-service limits for alarms
- system return-to-service occurrences.

A carrier maintains communication on links that connect DMS peripherals to channel banks. A carrier also maintains communication on links that connect DMS peripherals to remote DMS peripherals or remote-to-remote peripherals.

A maximum of 16 entries are present for each type of peripheral that can provide carrier links in the switch. The inventory table of the C-side peripheral is table LTCPSINV. Table TTPSINV contains the data to select entries for each carrier.

The following checks occur between table CARRMTC and table LTCPSINV:

- When table LTCPSINV contains an entry for a carrier index (CARRIDX) table CARRMTC must contain an entry for the PM type. An example is SMU.
- When an entry is deleted from table CARRMTC a carrier cannot reference the entry in table LTCPSINV. If carriers in table LTCPSINV can reference the entry, the system rejects the deletion command.
- When a current entry in table CARRMTC changes, the system checks table LTCPSINV to determine if in-service (INSV) carriers reference the entry. If INSV carriers reference the entry, the system rejects the change command and a list of the INSV carriers appears.

The datafill for Basic Call Processing for table CARRMTC appears in the following table. Only the fields that apply to Basic Call Processing appear in

this table. For a description of the other fields, refer to the data schema section of this document.

Datafilling table CARRMTC (Sheet 1 of 5)

Field	Subfield or refinement	Entry	Description and action
CSPMTYPE		SMU	Indicates C-side node PM type. Enter the PM type of the node on the C-side of the carrier link. In this case, enter SMU.
TMPLTNM		character	Template name. Enter the template name with a maximum of 16 characters for the PM. This entry appears in the CARRIDX field of table LTCPSINV. The default value is DEFAULT. ***Note:*** Enter as NO_YELLOW_ALM to allow values in fields BEROL and BERML. See BpV handling.
RTSML		0 to 255	The RTS maintenance limit. Enter the number of times in the audit interval a carrier can RTS before the system issues a warning. Value 255 disables this feature.
RTSOL		0 to 255	The RTS out-of-service limit. Enter the number of times a carrier can RTS before the system places the carrier permanently OOS. Enter this number in the audit interval. Value 255 disables this feature.
CONTMARK		character	Continuation mark. Enter a plus (+) symbol for the record to be continued on the next line.
ATTR		see subfield	Attribute. This field contains subfield SELECTOR.

Note 1: The DMS-100 switch adds the first tuple for SMU to table CARRMTC during initial program load (IPL) or first restart after IPL. This entry is index 0. This entry has the value DEFAULT in the TMPLTNM field and default values for the other fields. You cannot delete this tuple. Only fields ES, SES and thresholds for frame and slip losses can change.

Note 2: You must add tuples other than the default tuple manually before the tuples can be referenced in table LTCPSINV. You can delete these tuples only if DS-1 carriers do not associate with these tuples.

Note 3: You can change tuples in table CARRMTC if the associated DS-1 carriers are manually busy (ManB) or offline (OFFL).

Basic Call Processing (continued)

Datafilling table CARRMTC (Sheet 2 of 5)

Field	Subfield or refinement	Entry	Description and action
	SELECTOR	alphanumeric	Selector. Enter carrier type DS1.
ATTR (continued)	CARD	alphamumeric	Card. Enter the PEC of the DS-1 I/F card used. The range of values for the SMU is NT6X50AA, NT6X50AB, 6X85AA and 6X85AB. The NT6X50AB provides the 64 kbps clear-channel capability required for ISDN and MBS services that operate in B8ZS mode.
	VOICELAW	character	Voice law. Enter the voice law that the carrier uses. Use A_LAW in international switches. Use MU_LAW in North American switches.
	FF	character	Frame format. Enter SF (standard frame or super frame) in this field. The SMU-RCU subsystem uses the 12 frame format, 125 µs per frame.
	ZLG	character	Zero logic. Enter ZCS for zero code suppression. If all zeroes are transmitted the system inserts the number one in the second least significant bit position. This causes an incorrect transmission for data in the SMU-RCU subsystem but causes only minor noise for speech. Enter B8ZS for bipolar 8-bit zero substitution. The 64 kbps clear-channel capability for ISDN and MBS services requires B8ZS.
	BERB	character	Indicates bit error rate base. Enter BPV for bipolar violation.
	DLK	character	Data link. Currently, only NILDL is supported.

Note 1: The DMS-100 switch adds the first tuple for SMU to table CARRMTC during initial program load (IPL) or first restart after IPL. This entry is index 0. This entry has the value DEFAULT in the TMPLTNM field and default values for the other fields. You cannot delete this tuple. Only fields ES, SES and thresholds for frame and slip losses can change.

Note 2: You must add tuples other than the default tuple manually before the tuples can be referenced in table LTCPSINV. You can delete these tuples only if DS-1 carriers do not associate with these tuples.

Note 3: You can change tuples in table CARRMTC if the associated DS-1 carriers are manually busy (ManB) or offline (OFFL).

Datafilling table CARRMTC (Sheet 3 of 5)

Field	Subfield or refinement	Entry	Description and action
ATTR (continued)	IAT	Y	Inhibit alarm transmit (IAT). Enter Y for the IAT field to inhibit the processing of yellow alarms. Refer to the Understanding yellow alarms in the SMU-RCU configuration section for more information.
	LCGAST	1 to 9999	Local carrier group alarm (LCGA) set threshold. Enter the value for the threshold in units of 10 ms. The recommended entry is 250.
	LCGACL	1 to 9999	The LCGA clear threshold. Enter the value for the threshold in units of 10 ms. The recommended entry is 1000.
	RCGAST	numeric	Remote carrier group alarm (RCGA) set threshold. The system sets this field at 220 ms. This value overrides datafill.
CONTMARK		character	Continuation mark. Enter a plus sign (+) to continue the record on the next line.
	RCGACL	1 to 9999	The RCGA clear threshold. The system sets this field at 5 s. This value overrides datafill.
	AISST	1 to 9999	Alarm indication signal set threshold. Enter the value for the threshold in units of 10 ms. The SMU and RCU connect through the DS-1 lines. Alarm indication signals have no application in a simple network. Use the default value for this field because this field does not apply for SMU-RCU.

Note 1: The DMS-100 switch adds the first tuple for SMU to table CARRMTC during initial program load (IPL) or first restart after IPL. This entry is index 0. This entry has the value DEFAULT in the TMPLTNM field and default values for the other fields. You cannot delete this tuple. Only fields ES, SES and thresholds for frame and slip losses can change.

Note 2: You must add tuples other than the default tuple manually before the tuples can be referenced in table LTCPSINV. You can delete these tuples only if DS-1 carriers do not associate with these tuples.

Note 3: You can change tuples in table CARRMTC if the associated DS-1 carriers are manually busy (ManB) or offline (OFFL).

Basic Call Processing (continued)

Datafilling table CARRMTC (Sheet 4 of 5)

Field	Subfield or refinement	Entry	Description and action
CONTMARK (continued)	AISCL	1 to 9999	Alarm indication signal clear threshold. Enter the value for the threshold in units of 10 ms. The SMU and RCU connect through DS-1 lines. Alarm indication signals have no application in a simple network. Use the default value for this field because this field does not apply for SMU-RCU.
	BEROL	3 to 6	Bit error rate out-of-service limit (BEROL). Enter the BEROL expressed as the negative of the exponent of 10 (10E-n). For example, 3 represents a 1 in 1000 bit error rate (BER). ***Note:*** If the value of field TMPLTNM is DEFAULT, the system sets this value to 3 and overrides datafill. If the value of field TMPLTNM is NO_YELLOW_ALM, you can control this value for a value in the range.
	BERML	4 to 7	The BER maintenance limit (BERML). Enter the BERML expressed as the negative of the exponent of 10 (10E-n). For example, 3 represents a 1 in 1000 BER. ***Note:*** If the value of field TMPLTNM is DEFAULT, the system sets this value to 6 and overrides datafill. If the value of field TMPLTNM is NO_YELLOW_ALM, you can control this value for a value in the range.
CONTMARK (continued)	ES	0 to 9999	Error second (ES) threshold. Enter the value for the threshold in units of 10 ms.

Note 1: The DMS-100 switch adds the first tuple for SMU to table CARRMTC during initial program load (IPL) or first restart after IPL. This entry is index 0. This entry has the value DEFAULT in the TMPLTNM field and default values for the other fields. You cannot delete this tuple. Only fields ES, SES and thresholds for frame and slip losses can change.

Note 2: You must add tuples other than the default tuple manually before the tuples can be referenced in table LTCPSINV. You can delete these tuples only if DS-1 carriers do not associate with these tuples.

Note 3: You can change tuples in table CARRMTC if the associated DS-1 carriers are manually busy (ManB) or offline (OFFL).

Datafilling table CARRMTC (Sheet 5 of 5)

Field	Subfield or refinement	Entry	Description and action
	SES	0 to 9999	Severe error second (SES) threshold. Enter the value for the threshold in units of 10 ms.
	FRAMEML	0 to 9999	Frame maintenance limit. Enter the maintenance limit (ML) for frame loss.
	FRAMEOL	0 to 9999	Frame loss limit. Enter the OL for frame loss. The FRAMEOL must be larger than FRAMEML.
	SLIPML	0 to 9999	Slip ML. Enter the ML for slip.
	SLIPOL	0 to 9999	Slip OL. Enter the OL for slip. The SLIPOL must be larger than SLIPML.

Note 1: The DMS-100 switch adds the first tuple for SMU to table CARRMTC during initial program load (IPL) or first restart after IPL. This entry is index 0. This entry has the value DEFAULT in the TMPLTNM field and default values for the other fields. You cannot delete this tuple. Only fields ES, SES and thresholds for frame and slip losses can change.

Note 2: You must add tuples other than the default tuple manually before the tuples can be referenced in table LTCPSINV. You can delete these tuples only if DS-1 carriers do not associate with these tuples.

Note 3: You can change tuples in table CARRMTC if the associated DS-1 carriers are manually busy (ManB) or offline (OFFL).

Understanding yellow alarms in the SMU-RCU configuration

A yellow alarm occurs when the second least significant bit of all channels of the associated DS-1 link is set to zero. In the SMU-RCU configuration, the system sends alarm messages through the dedicated message channels. The system does not send the alarm messages through the associated DS-1 channels.

When the value of the IAT field is N, yellow alarms are active in both directions for the DS-1 link. The system does not process yellow alarms for the SMU-RCU. The RCU cannot send yellow alarms or act on the reception of these alarms. Set the IAT field to Y to inhibit the processing of yellow alarms on DS-1 links between the SMU and RCU.

BpV handling

The SMU software contains hard-coded BpV levels for the RCU. The BpV level is 1E-3 for the out-of-service (OOS) limit and 1E-6 for the maintenance (MTC) limit. The 1E-3 value is a 1 in 1000 bit error rate.

Basic Call Processing (continued)

When the value of field TMPLTNM is DEFAULT, the system compares the BpV reports to these values. This report determines if an alarm is required. The value of field CARRIDX in table LTCPSINV must also be DEFAULT.

You can control RCU BpV levels when the value of field TMPLTNM is NO_YELLOW_ALM. The value of field CARRIDX in table LTCPSINV must also be NO_YELLOW_ALM. In this event, the system does not compare RCU BpV reports to hard-coded constants. The system uses the values in fields BEROL and BERML.

Datafill example for table CARRMTC

Sample datafill for table CARRMTC appears in the following example:

MAP example for table CARRMTC

```
CSPMTYPE     TMPLTNM RTSML RTSOL
                                                    ATTR
-------------------------------------------------
SMU    NO_YELLOW_ALM   255   255
            DS1 NT6X85AB MU_LAW SF ZCS BPV NILDL Y 250 1000 220  50 50 1000
3  6 864 100 17 511  4   255

SMU           6X50AB   255   255
           DS1 NT6X50AB MU_LAW SF B8ZS BPV NILDL N 250 1000 50  50 150 1000
3  6 864 100 17 511  4   255
```

Datafilling table LTCPSINV

The datafill for Basic Call Processing for table line trunk controller P-side link inventory (LTCPSINV) appears in the following table. Fields that apply to Basic Call Processing appear in this table. For a description of the other fields, refer to the data schema section of this document.

The LTCPSINV table lists the following data assignment. This table lists data assignment for each bay associated with an SMU unit:

- PM type and number
- port designation of the P-side links.

The following table provides a description and the correct action to take for each field and subfield.

Datafilling table LTCPSINV (Sheet 1 of 2)

Field	Subfield or refinement	Entry	Description and action
LTCNAME		see subfields	The LTC name. This field contains subfields XPMTYPE and XPMNO.
	XPMTYPE	character	The PM type. Enter the type of PM, in this occurrence SMU.
	XPMNO	0 to 255	The PM Number. Enter the PM number. ***Note:*** Operating company personnel can number the XPMs from 0 to 255 but the total number of tuples in tables LTCINV and LTCRINV combined cannot exceed 210 XPMs. The XPM types can be any combination of types accepted by the two tables.
PSLNKTAB		see subfields	The P-side link table. This field contains subfields PSLINK, PSDATA, CARRIDX, ACTION, and CONTMARK. Vector from 0-19. ***Note:*** Make changes to fields with multiple entries in the PROMPT mode only.
	PSLINK	0 to 19	The P-side Link. Enter the P-side port number. ***Note:*** Enter DCH cards. Begin with port 19 and work backwards. Use only odd-numbered ports. The spare DCH must be the last DCH assigned.
	PSDATA	alphanumeric	The P-side data. Enter DS1 for DS-1 type I/F card. Enter DCH for D-channel handler. The NILTYPE is the default value. If the entry is NILTYPE or DCH, no additional fields are required. If the entry is DS1, subfields CARRIDX and ACTION require data.

Note 1: The system allocates memory to a maximum of 128 tuples for table LTCPSINV. Memory is allocated as required to allow a maximum sum of 210 tuples in tables LTCINV and LTCRINV combined.

Note 2: The DCHs can have P-side ports assigned if table LTCINV has an ISP optional card.

Note 3: Each DCH assigned to a port makes two DS-1 ports unavailable.

Basic Call Processing (continued)

Datafilling table LTCPSINV (Sheet 2 of 2)

Field	Subfield or refinement	Entry	Description and action
	CARRIDX	character	Carrier index. The default value is DEFAULT. The range is DEFAULT or NO_YELLOW_ALM. Enter the same value for the template name in table CARRMTC.
PSLNKTAB (continued)	ACTION	Y or N	Action. Enter Y to remove the carrier from service. Enter Y when frame, slip, errored-second or severe errored-second exceed the OOS limit. Enter N if these values do not exceed the OOS limit.
	CONTMARK	+ or $	Continuation mark. Enter a plus sign (+) when the vector continues on the next line. Enter a dollar sign ($) to end the vector.
Note 1: The system allocates memory to a maximum of 128 tuples for table LTCPSINV. Memory is allocated as required to allow a maximum sum of 210 tuples in tables LTCINV and LTCRINV combined.			
Note 2: The DCHs can have P-side ports assigned if table LTCINV has an ISP optional card.			
Note 3: Each DCH assigned to a port makes two DS-1 ports unavailable.			

Datafill example for table LTCPSINV

Sample datafill for table LTCPSINV appears in the following example:

MAP example for table LTCPSINV

```
LTCNAME                                                PSLNKTAB
------------------------------------------------------------
SMU    0
(0 DS1 NO_YELLOW_ALM Y) (1 DS1 NO_YELLOW_ALM Y)
(2 DS1 NO_YELLOW_ALM Y) (3 DS1 NO_YELLOW_ALM Y)
(4 DS1 DEFAULT N)  (5 DS1 6X50AB N) (6 NILTYPE)
(7 NILTYPE) (8 NILTYPE) (9 NILTYPE) (10 NILTYPE)
(11 NILTYPE) (12 NILTYPE) (13 NILTYPE) (14 NILTYPE)
(15 NILTYPE) (16 NILTYPE) (17 DCH) (18 NILTYPE) (19 DCH) $
```

Datafilling table RCUINV

The datafill for Basic Call Processing for table RCUINV appears in the following table. Fields that apply to Basic Call Processing appear in this table.

For a description of the other fields, refer to the data schema section of this document.

Datafilling table RCUINV (Sheet 1 of 11)

Field	Subfield or refinement	Entry	Description and action
RCUNO		Refer to subfields	The RCU number. This field contains subfields SITE, FRAME and UNIT.
	SITE	alphanumeric maximum of 4 characters	Indicates site. Enter the alphanumeric location of the RCU. The first character must be alphabetic. This is not optional. A default value is not assigned to the entry.
	FRAME	0 to 511	Frame. Enter the logical frame number. This number is part of the LEN. The range of entries for NT40 is 0-127. The range of entries for SuperNode is 0-511.
	UNIT	0 to 9	Unit. Enter the logical unit number of the RCU. This unit is part of the LEN.
ADNUM		0 to 4095	Administration number. The EADAS/DC use this number to identify nodes in the DMS-100 family switch. This number remains fixed over dump and restore.
FRTYPE		character	Frame type. Enter the frame name of the RCU: remote unit bay (RUB) or remote unit cabinet (RUC).
FRNO		0 to 511	Frame number. Enter the frame number of the RCU. This number must differ by office.

Note 1: Dynamic allocation of memory occurs for a maximum of 255 entries.

Note 2: The value of SSM1 and SSM2 cannot be Y if the SMU has an EISP card.

Note 3: The DRTU does not support ISDN loop measurements. Use a bypass pair to test ISDN loops.

Note 4: When you enter data into field C-side link table (CSLNKTAB), do not assign message links to the same I/F card. When the I/F card supports two or more links, you must separate the message links by the number of links on the I/F cards. This requirement applies to all I/F link types; DS-1, DS30, DS30A, or PCM-30. Table control issues a warning if you attempt to assign message links to the same I/F card. If you assign more than one message link to the same I/F card, an E1 outage can occur if the card fails. An E1 outage is a failure of all message links.

Basic Call Processing (continued)

Datafilling table RCUINV (Sheet 2 of 11)

Field	Subfield or refinement	Entry	Description and action
SHPOS		0 to 77	Shelf position. Enter the position of the RCU control shelf in inches above the floor level.
FLOOR		0 to 99	Floor. Enter the floor that contains the PM equipment frame.
ROW		character	Row. Enter the row on the floor that contains the PM equipment frame. The range is A-H, J-N, P-Z, AA-HH, JJ-NN, or PP-RR.
FRPOS		0 to 99	Frame position. Enter the position in the row of the PM equipment frame. The range is from 0 to 99.
CSPMNO		see subfields	The C-side PM number. This field contains subfields PMTYPE and PMNO.
	PMTYPE	character	The PM type. Enter the type of PM to which the RCU attaches.
	EXTPMNO	0 to 127	The PM number Enter the PM number to which the RCU attaches. The range is from 0 to 127.

Note 1: Dynamic allocation of memory occurs for a maximum of 255 entries.

Note 2: The value of SSM1 and SSM2 cannot be Y if the SMU has an EISP card.

Note 3: The DRTU does not support ISDN loop measurements. Use a bypass pair to test ISDN loops.

Note 4: When you enter data into field C-side link table (CSLNKTAB), do not assign message links to the same I/F card. When the I/F card supports two or more links, you must separate the message links by the number of links on the I/F cards. This requirement applies to all I/F link types; DS-1, DS30, DS30A, or PCM-30. Table control issues a warning if you attempt to assign message links to the same I/F card. If you assign more than one message link to the same I/F card, an E1 outage can occur if the card fails. An E1 outage is a failure of all message links.

Datafilling table RCUINV (Sheet 3 of 11)

Field	Subfield or refinement	Entry	Description and action
CSLNKTAB		Refer to subfields	The C-side link table. This field is a vector of a maximum of eight entries that consist of subfields CSLINK and SMUPORT. ***Note:*** Make changes to fields with multiple entries in the PROMPT mode only. If you enter less than eight entries, you must enter a dollar sign ($) after the last link to terminate the vector. Enter one or more message links. If you add only two links, the links must both be message links.
	CSLINK	alphanumeric	The C-side port number. Enter the C-side port number of the RCU that corresponds to links 1 through 8 to which the SMU attaches through DS-1 links. Links 3 and 4 are the message links.
	SMUPORT	0 to 19	The P-side port number. Enter the P-side port number of the SMU to which DS-1 links coming from the RCU attach.
RNGDATA		Refer to subfields	Ring data. This field contains subfields RNGTYPE and FREQUENCIES.

Note 1: Dynamic allocation of memory occurs for a maximum of 255 entries.

Note 2: The value of SSM1 and SSM2 cannot be Y if the SMU has an EISP card.

Note 3: The DRTU does not support ISDN loop measurements. Use a bypass pair to test ISDN loops.

Note 4: When you enter data into field C-side link table (CSLNKTAB), do not assign message links to the same I/F card. When the I/F card supports two or more links, you must separate the message links by the number of links on the I/F cards. This requirement applies to all I/F link types; DS-1, DS30, DS30A, or PCM-30. Table control issues a warning if you attempt to assign message links to the same I/F card. If you assign more than one message link to the same I/F card, an E1 outage can occur if the card fails. An E1 outage is a failure of all message links.

Basic Call Processing (continued)

Datafilling table RCUINV (Sheet 4 of 11)

Field	Subfield or refinement	Entry	Description and action
	RNGTYPE	C, F, unassigned, S, C30, or CSR	Ring type: coded or frequency selective ringing (FSR). Enter the type of ringing the RCU uses to ring the attached subscriber lines. If all subscribers are POTS, enter C or F. The RCU supports coded and FSR ringing. Enter C for coded ringing. Enter F for FSR. If F is chosen, you must enter field FREQUENCIES.

Note 1: Dynamic allocation of memory occurs for a maximum of 255 entries.

Note 2: The value of SSM1 and SSM2 cannot be Y if the SMU has an EISP card.

Note 3: The DRTU does not support ISDN loop measurements. Use a bypass pair to test ISDN loops.

Note 4: When you enter data into field C-side link table (CSLNKTAB), do not assign message links to the same I/F card. When the I/F card supports two or more links, you must separate the message links by the number of links on the I/F cards. This requirement applies to all I/F link types; DS-1, DS30, DS30A, or PCM-30. Table control issues a warning if you attempt to assign message links to the same I/F card. If you assign more than one message link to the same I/F card, an E1 outage can occur if the card fails. An E1 outage is a failure of all message links.

Datafilling table RCUINV (Sheet 5 of 11)

Field	Subfield or refinement	Entry	Description and action
RNGDATA (continued)	FREQUENCIES	numeric	Frequencies. Enter four frequencies from the set of five frequencies. The line card supports four different frequencies. The sets are the following: 1. 17, 25, 34, 50, 67 2. 20, 30, 42, 54, 66 3. 16, 30, 42, 54, 66 4. 20, 30, 40, 50, 60. ***Note:*** The RCU modules that connect to the same SMU and use FSR to ring subscriber lines must use the same frequencies. The modules must use the frequencies in the same order in which the frequencies were entered. For example, an RCU module attached to SMU 5 can use FSR with the following entered frequencies 20, 30, 40, and 50. In this event, all other RCU modules that connect to SMU 5 and use FSR ringing must be entered with the same frequencies.

Note 1: Dynamic allocation of memory occurs for a maximum of 255 entries.

Note 2: The value of SSM1 and SSM2 cannot be Y if the SMU has an EISP card.

Note 3: The DRTU does not support ISDN loop measurements. Use a bypass pair to test ISDN loops.

Note 4: When you enter data into field C-side link table (CSLNKTAB), do not assign message links to the same I/F card. When the I/F card supports two or more links, you must separate the message links by the number of links on the I/F cards. This requirement applies to all I/F link types; DS-1, DS30, DS30A, or PCM-30. Table control issues a warning if you attempt to assign message links to the same I/F card. If you assign more than one message link to the same I/F card, an E1 outage can occur if the card fails. An E1 outage is a failure of all message links.

Basic Call Processing (continued)

Datafilling table RCUINV (Sheet 6 of 11)

Field	Subfield or refinement	Entry	Description and action
LTA		Y or N	Line test access (LTA). Enter Y if an LTA card is present in the power shelf of the RCU. For other conditions, enter N. ***Note:*** If this field is Y, the RLTP and remote test access card (RTAC) fields must be set to N.
RLTP		Y or N	Remote line test processor (RLTP). Enter Y if an RLTP card is present in the power shelf of the RCU. Enter N if an RLTP card is not present in the power shelf of the RCU. ***Note:*** If this field is Y, set the LTA and RTAC fields to N.
RTAC		Y or N	Indicates RTAC. Enter Y if an RTCA is present in the power shelf of the RCU. Enter N if an RTCA is not present in the power shelf of the RCU. ***Note:*** If this field is Y, set the LTA and RLTP fields to N. The RTAC is used with a digital remote test unit (DRTU).
LINESHF1		Y or N	Line shelf 1. Enter Y if line shelf 1 is equipped. Enter N if line shelf 1 is not equipped. If N is entered, links 1 and 2 cannot be entered as equipped.

Note 1: Dynamic allocation of memory occurs for a maximum of 255 entries.

Note 2: The value of SSM1 and SSM2 cannot be Y if the SMU has an EISP card.

Note 3: The DRTU does not support ISDN loop measurements. Use a bypass pair to test ISDN loops.

Note 4: When you enter data into field C-side link table (CSLNKTAB), do not assign message links to the same I/F card. When the I/F card supports two or more links, you must separate the message links by the number of links on the I/F cards. This requirement applies to all I/F link types; DS-1, DS30, DS30A, or PCM-30. Table control issues a warning if you attempt to assign message links to the same I/F card. If you assign more than one message link to the same I/F card, an E1 outage can occur if the card fails. An E1 outage is a failure of all message links.

Datafilling table RCUINV (Sheet 7 of 11)

Field	Subfield or refinement	Entry	Description and action
CTRLSHF2		Y or N	Control shelf 2. Enter Y if control shelf 2 is equipped. Enter N if control shelf 2 is not equipped. To equip control shelf 2, line shelf 1 must be equipped. The DS-1 links do not need to attach to line shelf 1. If you enter N, configuration alarms are suppressed for the following common equipment cards: • control processor extension • switch • digroup • supervisory
LINESHF2		Y or N	Line shelf 2. Enter Y if line shelf 2 is equipped. Enter N if line shelf 2 is not equipped. To equip line shelf 2, control shelf 2 must be equipped. The DS-1 links do not need to attach to control shelf. If you enter N, configuration alarms are suppressed for the digroup cards. Links 5 and 6 cannot be entered as equipped.

Note 1: Dynamic allocation of memory occurs for a maximum of 255 entries.

Note 2: The value of SSM1 and SSM2 cannot be Y if the SMU has an EISP card.

Note 3: The DRTU does not support ISDN loop measurements. Use a bypass pair to test ISDN loops.

Note 4: When you enter data into field C-side link table (CSLNKTAB), do not assign message links to the same I/F card. When the I/F card supports two or more links, you must separate the message links by the number of links on the I/F cards. This requirement applies to all I/F link types; DS-1, DS30, DS30A, or PCM-30. Table control issues a warning if you attempt to assign message links to the same I/F card. If you assign more than one message link to the same I/F card, an E1 outage can occur if the card fails. An E1 outage is a failure of all message links.

Basic Call Processing (continued)

Datafilling table RCUINV (Sheet 8 of 11)

Field	Subfield or refinement	Entry	Description and action
SSM1		Y or N	Special service module 1 (SSM1). Enter Y if SSM1 is provisioned. This SSM occupies shelf 6 and has a bus extender equipped on control shelf 1 in slot 1 that corresponds. ***Note:*** The SSMs do not have support on RCUs assigned to SMUs equipped with an EISP card.
SSM2		Y or N	Special service module 2 (SSM2). Enter Y if SSM 2 is provisioned. This SSM occupies shelf 7 and has a bus extender equipped on control shelf 1 in slot 2 that corresponds. ***Note:*** The SSMs do not have support on RCUs assigned to SMUs equipped with an EISP card.
SYSTMOPT		Refer to subfield	System options. Enter system options under subfield SYSOPT.
	SYSOPT	S or O	Options. Enter S to select default values for system options. Enter O to obtain prompts for each system option that needs values entered. ***Note:*** The system options consist of the following subfields: AUTOTEST, INITALRM, FAILSEN and SSPRI.

Note 1: Dynamic allocation of memory occurs for a maximum of 255 entries.

Note 2: The value of SSM1 and SSM2 cannot be Y if the SMU has an EISP card.

Note 3: The DRTU does not support ISDN loop measurements. Use a bypass pair to test ISDN loops.

Note 4: When you enter data into field C-side link table (CSLNKTAB), do not assign message links to the same I/F card. When the I/F card supports two or more links, you must separate the message links by the number of links on the I/F cards. This requirement applies to all I/F link types; DS-1, DS30, DS30A, or PCM-30. Table control issues a warning if you attempt to assign message links to the same I/F card. If you assign more than one message link to the same I/F card, an E1 outage can occur if the card fails. An E1 outage is a failure of all message links.

Datafilling table RCUINV (Sheet 9 of 11)

Field	Subfield or refinement	Entry	Description and action
SYSTMOPT (continued)	AUTOTEST	Y or N	Automatic system testing. Enter Y to enable automatic system testing, which executes switchover of RCU common equipment. This equipment does not include message processor. The system tests the RCU line and associated common equipment cards. Enter N to disable automatic system testing. Only switchover of common equipment occurs when testing starts. The default is N.
	INITALRM	Y or N	Initialization alarm display. Enter Y to enable alarm output to the maintenance card faceplate during initialization. Enter N to disable alarm output. The default is N.
	FAILSEN	Y or N	Failure sensitivity level. Enter Y to enable line card alarms, types 1 through 4, to appear. The automatic system test produces the line card alarms. The default is N. ***Note:*** If the AUTOTEST field is set to Y, the FAILSEN field must be set to Y.

Note 1: Dynamic allocation of memory occurs for a maximum of 255 entries.

Note 2: The value of SSM1 and SSM2 cannot be Y if the SMU has an EISP card.

Note 3: The DRTU does not support ISDN loop measurements. Use a bypass pair to test ISDN loops.

Note 4: When you enter data into field C-side link table (CSLNKTAB), do not assign message links to the same I/F card. When the I/F card supports two or more links, you must separate the message links by the number of links on the I/F cards. This requirement applies to all I/F link types; DS-1, DS30, DS30A, or PCM-30. Table control issues a warning if you attempt to assign message links to the same I/F card. If you assign more than one message link to the same I/F card, an E1 outage can occur if the card fails. An E1 outage is a failure of all message links.

Basic Call Processing (continued)

Datafilling table RCUINV (Sheet 10 of 11)

Field	Subfield or refinement	Entry	Description and action
SYSTMOPT (continued)	SSPRI	Y or N	Special services priority. Enter Y to enable special-service priority. This entry allows special-service calls to replace POTS calls during channel reassignment. The calls replace POTS calls when all DS-1 channels on correctly operating DS-1 links are occupied. Enter N to disable special-service priority. The default is N.
	DRTUTEST	Y or N	The DRTU selector. Enter Y to enable line testing by the DRTU. Enter N to use a bypass test pair for line testing. The default is N. If you enter Y, the system prompts you to enter data for subfields DRTURCU and DRTUCBCK. ***Note:*** Set field RTAC to Y if DRTUTEST is enabled.
DRTURCU		alphanumeric	The DRTU selector RCU. Enter the site name, frame number and unit number of the RCU equipped with the DRTU.
DRTURCU (continued)	SITE	alphanumeric	Site. Location of the RCU, enter a maximum of four characters. The first character must be alphabetic.
	FRAME	0 to 511	Frame. Enter the logical frame number.

Note 1: Dynamic allocation of memory occurs for a maximum of 255 entries.

Note 2: The value of SSM1 and SSM2 cannot be Y if the SMU has an EISP card.

Note 3: The DRTU does not support ISDN loop measurements. Use a bypass pair to test ISDN loops.

Note 4: When you enter data into field C-side link table (CSLNKTAB), do not assign message links to the same I/F card. When the I/F card supports two or more links, you must separate the message links by the number of links on the I/F cards. This requirement applies to all I/F link types; DS-1, DS30, DS30A, or PCM-30. Table control issues a warning if you attempt to assign message links to the same I/F card. If you assign more than one message link to the same I/F card, an E1 outage can occur if the card fails. An E1 outage is a failure of all message links.

Datafilling table RCUINV (Sheet 11 of 11)

Field	Subfield or refinement	Entry	Description and action
	UNIT	0 to 9	Unit. Enter the unit number of the RCU.
	DRTUCBCK	alphanumeric	The DRTU call back circuit. Enter the LEN of the circuit used to connect the call back path.
LOCATION		character	Location. Enter a maximum of 32 characters to identify the remote location of an RCU from the central office. Without accurate information stored in the DMS-100 switch, a technician must use an external source to determine the location of an RCU. The location can identify the street location of the RCU. The location information can require a blank space. The command interpreter (CI) does not allow blank spaces. To indicate a blank space in the LOCATION field, you can use an underscore _.

Note 1: Dynamic allocation of memory occurs for a maximum of 255 entries.

Note 2: The value of SSM1 and SSM2 cannot be Y if the SMU has an EISP card.

Note 3: The DRTU does not support ISDN loop measurements. Use a bypass pair to test ISDN loops.

Note 4: When you enter data into field C-side link table (CSLNKTAB), do not assign message links to the same I/F card. When the I/F card supports two or more links, you must separate the message links by the number of links on the I/F cards. This requirement applies to all I/F link types; DS-1, DS30, DS30A, or PCM-30. Table control issues a warning if you attempt to assign message links to the same I/F card. If you assign more than one message link to the same I/F card, an E1 outage can occur if the card fails. An E1 outage is a failure of all message links.

Reconfiguring DS-1 links

Use the CSLINKTAB field to add DS-1 links to table RCUINV. You must enter the links in table LTCPSINV as DS-1 links. The links must be OFFL. When you add the links to a shelf, the entry for the shelf must be *equipped*.

Basic Call Processing (continued)

You can use the CSLINKTAB field of table RCUINV to move current DS-1 links in an SMU-RCU subsystem. If you perform this procedure, you must keep the SMU and RCU in service (INSV). The following conditions apply:

- When you delete or reconfigure a current speech link, you must ManB the next RCU C-side speech link that succeeds.
- When you delete or reconfigure a current message link, the datafill for RCU C-side links is stored. The datafill is stored in the following order: 3 4 1 2 5 6 7 8. The message links are stored first. If you need to reconfigure link 4, you must ManB links 4 and 1. The shelves to which the links are moved must be entered as equipped.

Note: If the link that succeeds is not ManB the following error appears. This error indicates the link you must ManB.

```
Succeeding table entry, RCU link n must be MANB
```

When you delete DS-1 links from table RCUINV, the links to delete must be ManB. The RCU can remain INSV if the update does not require that you delete message links DS-1 links 3 and 4. If both message links require deletion, the links must be ManB and the RCU must be ManB or OFFL.

The ESMU ISDN SPECCONN Link Reconfiguration feature AF4252 allows operating company personnel to reconfigure C-side links of an ESMU-RCU subsystem. The personnel reconfigure the links from one ESMU to another while the ESMU remains INSV.

To reconfigure the RCUs C-side links, change the CSPMNO field in table RCUINV. The state of the links of the RCU to reconfigure must be ManB.

The following restrictions apply:

- A link reconfiguration must make sure enough SMU C-side capacity is present. This capacity must meet current SPECCONN and call processing requirements.
- If a C-side node of an RCU returns to service during modification, a static data (SD) mismatch can occur. This mismatch occurs between the central control (CC) and the ESMU. If this mismatch occurs, the ESMU must go to an in-service trouble (ISTb) state with the reason *static data mismatch.* The ESMU must be taken down and returned to service after the reconfiguration is complete.
- Reconfiguration cannot occur if 2- or 4-wire special connections are present or logical terminal identifiers (LTIDs) are provisioned.

- The system only supports reconfiguration of an RCU from and to ISDN ESMUs.
- Current connections must relocate in the new configuration. If this relocation does not occur, the system rejects the table change. The technician must use current tools or increase the number of entered C-side links to determine the connections to delete.

Entering C-side connectivity information

The numbering scheme of RCU C-side links appears in the following figure. Use this numbering scheme when you enter C-side connectivity information in table RCUINV.

Each RCU must have a power shelf and a control shelf configured. Link 3 or 4 must be configured. All other shelves and links are optional.

If two or more DS-1 links are configured, two of the links must be message links. Links 3 and 4 are message links. The links can carry messages in addition to speech and signaling information.

Messages are system control information used for the following activities:

- channel assignment
- maintenance
- provisioning.

The other links carry only speech and signaling information.

Basic Call Processing (continued)

DS-1 link physical numbering scheme

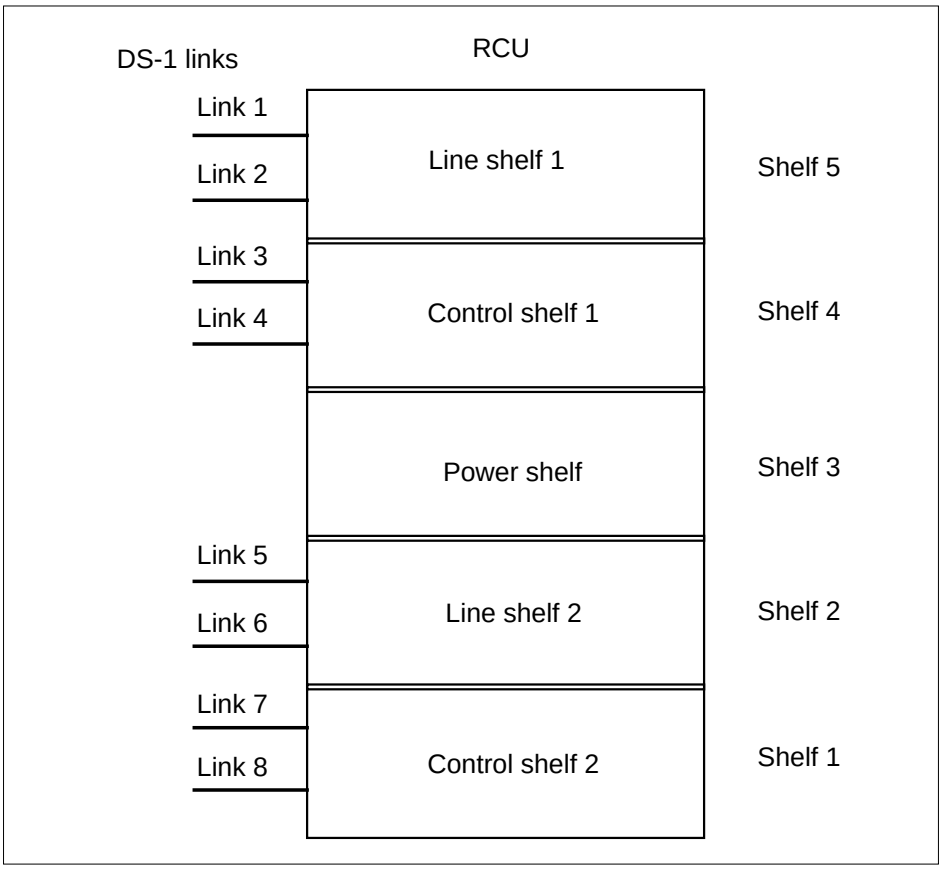

Datafill example for table RCUINV

Sample datafill for table RCUINV appears in the following example:

```
  RCUNO    ADNUM   FRTYPE   FRNO    SHPOS     FLOOR   ROW   FRPOS  CSPMNO
                                                            CSLNKTAB
                                                             RNGDATA
LTA   RLTP   RTAC    LINESHF1     CTRLSHF2     LINESHF2        SSM1 SSM2
SYSTMOPT    DRTUTEST    LOCATION
-------------------------------------------------------------------------
REM1 00    0 0   RUB        1       18       1     C   8          SMU 0
 (3 1)    (4 3)  (1 5)    (2 7)   (5 0)    (6 2)  (7 17)      (8 19) $
                                                F 17 25      50 67
   N       N   Y           Y         Y           Y            N    N
O   Y  Y   N N Y RCU0      0 0   RCU0 0  0  0  16       35_DAVIS_DRIVE_RTP
```

Datafilling table DCHINV

The D-channel handler (DCH) inventory table describes the physical, service, and channel allocation characteristics of DCHs provisioned in the SMU.

The inventory information includes the following:

- DCH identification number
- type and number of the host PM
- product equipment code of the DCH
- load file name of the DCH
- port that the DCH uses.

Datafill for Basic Call Processing for table DCHINV appears in the following table in the order of datafill. Only fields that apply to Basic Call Processing appear. The following table provides a description and an appropriate action to take for each field and subfield.

For a description of the other fields, refer to the data schema section of this document.

Datafilling table DCHINV (Sheet 1 of 2)

Field	Subfield or refinement	Entry	Description and action
DCHNO		0 to 255	The DCH number. Enter the external identification number the system uses to represent a specified DCH.
PMTYPE		SMU	The PM type. Enter SMU.
PMNO		0 to 255	The PM number. Enter the PM number of the SMU located with the DCH.
DCHPEC		alphanumeric	The DCH PEC. Enter the PEC of the DCH card. ***Note:*** The SCH is the load file name prefix for the DCH card. The ESH is the load file name prefix for the enhanced D-channel handler (EDCH) card NTBX02BA.

Basic Call Processing (continued)

Datafilling table DCHINV (Sheet 2 of 2)

Field	Subfield or refinement	Entry	Description and action
LOAD		alphanumeric	Indicates load file name. Enter the DCH load name.
PORT		0 to 63	Indicates DS-1 port. Enter the DS-1 port number the DCH uses. ***Note:*** Enter DCH ports in number order. Start with port 19 and work backwards. To enter the DCH ports, use the odd-numbered ports.

Datafill example for table DCHINV

Sample datafill for table DCHINV appears in the following example:

MAP example for table DCHINV

```
DCHNO    PMTYPE    PMNO    DCHPEC       LOAD    PORT
------------------------------------------------------
    0       SMU       0    BX02AA    SCH36AB      17
    1       SMU       0    BX02AA    SCH36AB      19
```

Datafilling table ISGDEF

The datafill for Basic Call Processing for table ISGDEF appears in the following table. Fields that apply to Basic Call Processing appear.

For a description of the other fields, refer to the data schema section of this document.

Table ISGDEF contains information on ISG numbers, PM type, the services provided and the allocation of services to channels.

Datafilling table ISGDEF (Sheet 1 of 2)

Field	Subfield or refinement	Entry	Description and action
ISGNO		0 to 255	The ISDN service group number. Enter the identification number used to assign D-channels to DCHs.
PMTYPE		SMU	The PM type. Enter SMU.
PMNO		alphanumeric	The PM number. Enter the external identification number for the PM.
SERVICE		character	Service. Enter the services provided by the ISDN service group. The range of values includes basic rate access (BRA), PD and TDC. A maximum of three entries can occur. If fewer than three entries occur, use a dollar sign ($) to terminate this field. ***Note 1:*** Make changes to fields with multiple entries in the PROMPT mode only. ***Note 2:*** To provide MBS or ISDN capability, this field must be set to BRA or PD. These values allow MBS and ISDN lines to select D-channels from the BRA service groups. ***Note 3:*** If feature package NI000007 is not installed in the switch, set this field to BRA. Channels 1-31 must be set to BRA.

Basic Call Processing (continued)

Datafilling table ISGDEF (Sheet 2 of 2)

Field	Subfield or refinement	Entry	Description and action
CHNLTAB		see subfields	Indicates channel information. This field is a vector with a maximum of 32 entries that specify the functions of each channel. This field consists of subfields DCHNL and CHNLTYPE. Use a dollar sign ($) to terminate this field if you make fewer than 32 entries. ***Note 1:*** Assign BD channels in number order. Start at 31 and work backwards. Assign BRA channels in number order. Start at 0 and work forwards. The order of datafill for BD and BRA channels has the following restrictions: For one night process (ONP), the warning message `BD channels must be higher than any BRA channels` appears. The warning informs operating company personnel that data ordering is not correct in the tuple transferred. The table on the new side accepts the tuple. For non-ONP, the error message `BD channels must be higher than any BRA channels` appears. The error message informs operating company personnel that data ordering in the tuple is not correct. The system rejects the tuple. ***Note 2:*** Make changes to fields with multiple entries in the PROMPT mode only.
	DCHNL	alphanumeric	The D-channel. Enter the external identifier for the D-channel.
	CHNLTYPE	Character	Channel type. Enter the type of service the D-channel provides. The values include NIL, RESERVED, BRA, BD and TDC. ***Note:*** If feature package NTX750AB is not installed, channels 1-31 must be set to BRA. Channel 0 is reserved.

Datafill example for table ISGDEF

Sample datafill for table ISGDEF appears in the following example:

MAP example for table ISGDEF

```
ISGNO   PMTYPE PMNO         SERVICE
                                                    CHNLTAB
-------------------------------------------------------------
    4      SMU    0    (BRA) (PD)$
(0 RESERVED) (1 BRA) (2 BRA) (3 BRA) (4 BRA)  (5 BRA)
(6 BRA) (7 BRA) (8 BRA) (9 BRA) (10 BRA)  (11 BRA)
(12 BRA) (13 BRA) (14 BRA) (15 BRA) (16 BRA) (17 BRA)
(18 BRA) (19 BRA) (20 BRA) (21 BRA) (22 BRA) (23 BRA)
(24 BRA) (25 BRA) (26 BRA) (27 BRA) (28 BRA) (29 BRA)
(30 BD) (31 BD) $
```

Datafilling table LTGRP

The datafill for Basic Call Processing for table LTGRP appears in the following table. Fields that apply to Basic Call Processing appear. For a description of the other fields, refer to the data schema section of this document.

Table LTGRP provides the capacity to define a maximum of 32 logical terminal groups. One of the groups is defined as ISDN. Group names can be a collection of digits or letters to a maximum of eight characters.

Each group can support a maximum of 1022 LTIDs. With 32 logical groups, a maximum of 32,704 LTIDs, 32 x 1022, can be defined.

The key to this terminal is the logical terminal group.

Note 1: The ISDN is a permanent entry and cannot be added or deleted.

Basic Call Processing (continued)

Note 2: A logical terminal must be entered in table LTGRP before a logical terminal from this group can enter in another table.

Datafilling table LTGRP

Field	Subfield or refinement	Entry	Description and action
GROUP		character	Group. Give the name of the logical group of terminals.
GROUPNO		0 to 31 or 0 to 15	Group number. Give the group number that corresponds to a group name. Although the number can be from 0-31, a group with the SAPI16 option must have a group number from 0-15. The data packet network (DPN) recognizes logical terminals by the logical terminal group and logical terminal number. The default group ISDN has group number 0 assigned.
OPTIONS		alphanumeric	Option. Give the option. The only option available is SAPI16. If option is specified, the packet and circuit switching terminals can be entered for this group. If option is not specified as SAPI16, packet-switching terminals cannot be entered for the group.

Datafill example for table LTGRP

Sample datafill for table LTGRP appears in the following example:

MAP example for table LTGRP

```
GROUP   GROUPNO                                  OPTIONS
-------------------------------------------------------
ISDN         0                                (SAPI16)$
SMU0         1                                (SAPI16)$
```

Datafilling table LTDEF

Table Logical Terminal Definition (LTDEF) defines ISDN terminals and the AP for the type of service the terminal can access.

The SERVORD is used to automatically datafill this table.

The datafill for Basic Call Processing for table LTDEF appears in the following table. Only fields that apply to Basic Call Processing appear. Refer to the customer data schema section of the *Translations Guide* for a description of the other fields.

CAUTION

Use the Service Order system, not the table editor, to add and delete tuples to and from table LTDEF.

Do not use the table editor to enter data for this table. Use of the table editor can result in features assigned to the line that are not compatible. The table datafill appears here for information only.

Datafilling table LTDEF for ISDN on SMU (Sheet 1 of 2)

Field	Subfield or refinement	Entry	Description and action
LTKEY			Logical terminal key. Subfields: LTGRP and LTNUM.
	LTGRP		Logical terminal group. Enter the logical terminal group. The group ISDN is defined.
	LTNUM	0 through 1022	Logical terminal number.

Basic Call Processing (continued)

Datafilling table LTDEF for ISDN on SMU (Sheet 2 of 2)

Field	Subfield or refinement	Entry	Description and action
LTAP		B, D, BD, or PB, 2B (see Description)	Logical terminal access privilege. Entry values: • B for circuit-switching • 2B for 2B circuit switching • D for D-channel packet-switching • BD for combined circuit-switching and D-channel packet-switching • PB for B-channel packet switching. Use BD for functional sets.
LTCLASS		BRAFS	Logical terminal class of service. Defines the set of services allowed for the LT. Use BRAFS for a BRI functional set.

Datafill example for table LTDEF

Sample datafill for table LTDEF appears in the following example:

MAP example for table LTDEF

```
Table: LTDEF

LTKEY  LTAP
                                                  LTCLASS
-------------------------------------------------------

LTCO        1   B
                                                  BRAFS
LTCO        2   B
   .                .                             BRAFS
   .                .
   .                .
RCU 0   23  D                                     BRAFS

RCU 0   24  D
                                                  BRAFS
```

Datafilling table RCUALRMS

Table RCUALRMS contains a list of 12 spare alarm codes and text strings for each remote carrier urban (RCU). Text strings appear in PM128 log reports and MAP displays when the problems the text strings describe occur.

The alarm codes range from 120 to 131. These codes have default groups (major/minor) and text strings. When the addition of an RCU to the DMS-100 switch occurs, the system allocates a tuple in table RCUALRMS. The text string NIL_TEXT associates with the spare alarm. When NIL_TEXT associates with a spare alarm, the system uses a default text string.

Refer to the data schema section of this document for a description of the other fields.

Underscores must represent spaces in a text string. The system replaces underscores with blanks before the underscores appear. When the system does not use underscores, the system truncates the text display at the first blank. For example, SMOKE DETECTED appears as SMOKE.

Spare alarms must be from 1 to 16 characters. A maximum of 25 different text strings are in table RCUALRMS.

Table RCUALRMS contains a list of spare alarm codes and text strings for each RCU. The specified text strings appear in log reports and MAP displays when the problems the text strings describe occur.

The following information appears in table RCUALRMS:

- the user assigns the site name to the remote location. This entry is not optional and the system does not assign a default value to the entry. The user must enter the site name in the table SITE.
- frame number is a logical number used to map the RCU in memory
- unit number is a logical number used to map the RCU in memory. Each RCU has a unit number
- spare alarm code that has a value from 120 to 131 that corresponds to a specified spare alarm
- alarm text is a default or customer-assigned text string that associates with the alarm

When entry of a tuple occurs in table RCUINV, the system allocates a tuple in table RCUALRMS. When deletion of a tuple occurs in table RCUINV, the system deletes the tuple that corresponds from table RCUALRMS. The the RCU identifies the tuple that corresponds.

Note: The user cannot add or delete tuples from table RCUALRMS directly. Use the table editor command CHANGE to change tuples.

Basic Call Processing (continued)

The datafill for Basic Call Processing for table RCUALRMS appears in the following table. The fields that apply directly to Basic Call Processing appear in this table.

Refer to the data schema section of this document for a description of the other fields.

Datafilling table RCUALRMS

Field	Subfield or refinement	Entry	Explanation and action
RCUNO		alphanumeric	Remote carrier urban number. This field contains subfields SITE, FRAME and UNIT.
	SITE	alphanumeric	Site. Enter the location of the RCU. This entry is not optional. The system does not assign a default value to the entry.
	FRAME	0 to 127 or 0 to 511	Frame. Enter the logical frame number. The logical frame number is part of the line equipment number (LEN). The range of entries for NT40 is 0 to 127. The range of entries for SuperNode is 0 to 511.
	UNIT	0 to 9	Unit. Enter the logical unit number of the RCU. The logical unit number of the RCU is part of the LEN.
RCUSPALM		alphanumeric	Remote carrier urban spare alarm. This field holds the spare alarm to use with the RCU. The field is a vector of a maximum of 12 entries. ***Note:*** Make changes to fields with multiple entries in the PROMPT mode only. When a maximum of 11 entries are made, enter a dollar sign ($) after the last entry to terminate the vector. The field has two parts: • an alarm code in the range of 120 to 131 • a text string that must contain 1 to 16 characters Enter NIL_TEXT to use default text strings. Enter blanks in the text strings as underscores to prevent truncated text after the first blank.

The default text string for each RCU spare alarm and a description of the alarm appears in the following table.

RCU spare alarms

Code	Category	Default text string	Alarm description
120	Major	Open door	Spare 1, or open door
121	Major	Low battery voltage	Spare 2, or low battery voltage
122	Major	Temperature alarm	Spare 3, or temperature too high/low
123	Major	Blown fuse or TSU	Spare 4, fuse on QPP373 blown, or timing supply unit fails
124	Minor	Loss of power or AC rectifier fail	Spare 1, AC rectifier failure, or loss of commercial power
125	Minor	Blown fuse or bypass breaker alarm	Spare 2, fan or actuator fuse, or bypass breaker operation alarm
126	Minor	Spare 3 alarm	Spare 3
127	Minor	Spare 4 alarm	Spare 4
128	Minor	Spare 5 alarm	Spare 5
129	Minor	Spare 6 alarm	Spare 6
130	Major	Spare 5 alarm	Spare 5
131	Major	Spare 6 alarm	Spare 6

Datafill examples for table RCUALRMS Two examples of RCUALRMS datafill follow.

Note: The type of frame used controls default datafill for this table. Entry of the type of frame occurred in table RCUINV.

The datafill for an RCU type frame appears in the following table.

Note: The table contains default datafill for spare alarms 120-125 as abbreviations of the current default alarm text.

Basic Call Processing (continued)

MAP example for table RCUALRMS

```
RCUN0
                                                    RCUSPALM
-------------------------------------------------------
RCU0 00 0
(120 OPEN_DOOR) (121 LOW_BATTERY_VOLT) (122 TEMP_ALM)
(123 BLWN_FUSE_OR_TSU) (124 NO_PWR_OR_AC_REC)
(125 FAN_ACT_BYPS_BRK) (126 NIL_TEXT) (127 NIL_TEXT)
(128 NIL_TEXT) (129 NIL_TEXT)
(130 NIL_TEXT)  (131 NIL_TEXT)
```

The default for the RUB type frame that contains NIL-TEXT for the fields appears in the following table.

MAP example for table RCUALRMS

```
RCUN0
                                            RCUSPALM
-------------------------------------------------
RCU0 00 0
(120 NIL_TEXT)  (121 NIL_TEXT)  (122 NIL_TEXT)
(123 NIL_TEXT)  (124 NIL_TEXT)  (125 NIL_TEXT)
(126 NIL_TEXT)  (127 NIL_TEXT)  (128 NIL_TEXT)
(129 NIL_TEXT)  (130 NIL_TEXT)  (131 NIL_TEXT)
```

Datafilling table TMINV

The trunk module inventory (TMINV) table contains hardware and software information for each trunk module provisioned in an office. This table is important for the SMU-RCU system. The TMINV table identifies the trunk modules that contain test circuits that terminate test pairs that connect to RCU lines.

Datafill example for table TMINV The sample datafill for table TMINV appears in the following table.

MAP example for table TMINV

```
  TMNM FRTYPE FRNO SHPOS FLOOR ROW FRPOS LKDATA EQPEC LOAD
EXECS        SCTMLOC
_____________________________________________________________________

   TM8 0   TME    1   65     0   L   16   0 53   2X52AB   BTMKA02
TM8EX            N
   MTM 0   TME    0   18     0   L   16   0 53   2X52AC   MTMKA02
   MTM 1   TME    1   18     0   L   20   0 55   2X52AC   MTMKA02
   OAU 0   TME    0   32     0   L   20   1 55   2X52AC   MTMKA02
```

Datafilling table TRKGRP

The trunk group (TRKGRP) table contains user defined data associated with each trunk group present in the switching unit. Each trunk group entry in table TRKGRP has a different CLLI for the trunk group and a number of other fields. The trunk group type (field GRPTYP) determines the other fields. The trunk group type that applies to the SMU-RCU system is the maintenance and test trunk group (MAINT).

Table TRKGRP is important for the SMU-RCU system. Table TRKGRP identifies the test circuits that associates with the maintenance and test trunks.

SCM line monitor access When operating company personnel at a remote test center initiate tests on a subscriber line, the line can be call processing busy.

The BARGE subfield in table TRKGRP determines if access of the line can occur in bridged mode through a conference card. The BARGE subfield allows operating company personnel to verify if a line is busy. The BARGE subfield identifies false busy signals.

When the subfield is set to Y (Yes), access to the line can occur through a conference card. When the subfield is set to N (No), access to the line cannot occur through a conference card. The default value for the subfield is NO.

Datafill example for table TRKGRP The sample datafill for table TRKGRP appears in the following table.

Basic Call Processing (continued)

MAP example for table TRKGRP

```
      GRPKEY
                                  GRPINFO
_____________________________________________________________

      TTT
       MAINT   0   IAO NCRT    2X96AA
      MJACK
       MAINT   0   IAO NCRT    1X54AA
      HSET
       MAINT   0   IAO NCRT    2X88AA
      LTU
       MAINT   0   IAO NCRT    2X11AA
      MONTALK
       MAINT   0   IAO NCRT    2X90AB
```

Datafilling table TRKSGRP

The trunk subgroup (TRKSGRP) table includes additional information for each subgroup assigned to one of the trunk groups in table TRKGRP.

A minimum of one and a maximum of two subgroups for each trunk group in table TRKGRP requires specification of input data. Trunk groups defined as maintenance (MAINT) group types do not need require specification of input data.

> ***Note:*** The trunk group datafill produces the trunk subgroup data for maintenance and test trunks. This action does not include subgroup 1 of trunk group with code TTU.

Datafill example for table TRKSGRP The sample datafill for table TRKSGRP appears in the following table.

MAP example for table TRKSGRP

```
            SGRPKEY    CARDCODE
                                                  SGRPVAR
_____________________________________________________________

 LTU 0   2X11AA
   STD OG    NP     WK   0 0 NO   NO F N N  17   UNEQ

 MONTALK 0   2X90AD
   STD OG    NP     WK   0 0 NO   NO F N N  17   UNEQ

 TTU 0   2X47AC
   STD OG    NP     WK   0 0 NO   NO F N N  17   UNEQ
```

Datafilling table TRKMEM

The data that associates with each trunk assigned to one of the trunk groups and subgroups, appears in the trunk member (TRKMEM) table. Tables TRKGRP and TRKSGRP specify these trunk groups and subgroups.

Datafill example for table TRKMEM The sample datafill for table TRKMEM appears in the following table.

MAP example for table TRKMEM

```
CLLI    EXTRKNM    SGRP          MEMVAR

LTU         0      0                  MTM    0 22
LTU         1      0                  MTM    2  2
TTT         0      0                  OAU    0 18
HSET        0      0                  TM8    0  4
```

Datafilling table ALMSCGRP

The alarm scan group (ALMSCGRP) table records the circuit equipment, location and type of circuit pack that contains scan points.

Datafill example for table ALMSCGRP The sample datafill for table ALMSCGRP appears in the following table.

MAP example for table ALMSCGRP

```
SCGROUP  TMTYPE   TMNO     TMCKTNO      CARDCODE

      0    MTM      1       1             3X82AA
      1    MTM      3       1             3X82AA
      2    MTM      1       7             3X84AA
      3    MTM      1      10             0X10AA
      .      .      .       .               .
      .      .      .       .               .
      .      .      .       .               .
     15    RSM      1       7              0X10AA
      .      .      .       .               .
      .      .      .       .               .
      .      .      .       .               .
     21    RMM      2      11             0X10AA
```

Basic Call Processing (continued)

Datafilling table ALMSDGRP

The alarm signal distributor group (ALMSDGRP) table records the circuit equipment, location and type of circuit pack that contains signal distributor points.

Datafill example for table ALMSCDRP The sample datafill for table ALMSDGRP appears in the following table.

MAP example for table ALMSDGRP

```
SDGROUP TMTYPE TMNO TMCKTNO      CARDCODE
---------------------------------------
      0    MTM    1        0        3X82AA
      1    MTM    3        0        3X82AA
      2    MTM    1        6        3X84AA
      4    MTM    1        4        2X57AA
      5    MTM    1        5        2X57AA
      6    MTM    1       18        2X57AA
      7    MTM    1       19        2X57AA
      8    MTM    6       18        2X57AA
      9    MTM    6       19        2X57AA
     10    MTM    9       18       2X57AA
     11    MTM    9       19       2X57AA
     12    RSM    0       22       2X57AA
      .     .     .      .         .
     22    MTM   12       18       2X57AA
     23    MTM   12       19       2X57AA
```

Datafilling table ALMSC

The alarm scan (ALMSC) table identifies the function that each of the assigned scan points in the ALMSC groups performs.

Datafill example for table ALMSC The sample datafill for table ALMSC appears in the following table.

MAP example for table ALMSC

```
FUNCTION SCGROUP POINT NORMALST REPORT ALM   LOGIC
MJSUCFLR      0     2      0  N  MJ N (PREFLRMJ Y N
                                      (MJXFR N Y)
                                   (MJALMAUD1 N N)
                                    (MJOTHVIS Y N)
                                  (MJALMAUD2 N N) $
MNSUCFLR      0     3      0  N  MN N (PREFLRMN Y N)
                                      (MNXFR N Y)
                                    (MNALMAUD Y N)
                                   (MNOTHVIS Y N) $
 RSC0_ABS_ALM 20    2      0  Y  MN N    (ABAUD N N)
                                     (ABSVIS N N)
                                   (EXPILDMS N N)
                                    (MNXFR N Y)
```

Datafilling table ALMSD

The alarm signal distributor point (ALMSD) table identifies the function that each of the ALMSD points in the ALMSD groups performs.

Datafill example for table ALMSD The sample datafill for table ALMSD appears in the following table.

MAP example for table ALMSD

```
FUNCTION SDGROUP POINT NORMALST AUDIBLE LAMPTEST
EXPILPWR       2     6        0       N        N
EXPILDMS       2     5        0       N        N
NTALMXFR       2     4        0       N        N
LN101TST       2     3        0       N        N
OAUFAIL        0     0        1       N        N
LMMNV          6     6        0       Y        N
PREFLRF        0     6        0       N        N
```

Datafilling table SCGRP

The product engineering codes (PECs) and location of scan groups that provide scan points for line features appear in this table. Each scan card provides fourteen scan points divided in two scan groups. Each scan group is assigned to a trunk module circuit number.

Note: Lines at a remote location must be assigned to scan points that belong to scan groups at the remote location.

Basic Call Processing (continued)

Datafill example for table SCGRP The sample datafill for table SCGRP appears in the following table.

MAP example for table SCGRP

```
SCGRPNO    TMTYPE    TMNO    TMCKTNO     CARDCODE

      0       MTM       1         14       0X10AA
      1       MTM       1         15       0X10AA
      2       RSM       1         12       0X10AA
      3       RSM       1         13       0X10AA
```

Datafilling table SDGRP

The PECs and location of signal distributor (SD) groups that provide the SD points for line features appear in this table. Each SD card provides fourteen SD points divided in two SD groups. Each SD group is assigned to a trunk module circuit number.

Lines at a remote location must be assigned to SD points that belong to SD groups at the remote location.

Table SDGRP is the datafill required to set RCU subscriber line mechanized loop tests. This table defines the SD groups used in mechanized loop tests. Table LTDSD defines the SD points that drive the applique circuit used in mechanized loop tests.

The PECs and location of scan groups that provide scan points for line features appear in this table. Each scan card provides fourteen scan points divided in two scan groups. Each scan group is assigned to a trunk module circuit number.

Note: Lines at a remote location must be assigned to scan points that belong to scan groups at the remote location.

Datafill example for table SDGRP The sample datafill for table SDGRP appears in the following table.

MAP example for table SDGRP

```
SDGRPNO    TMTYPE    TMNO    TMCKTNO     CARDCODE
-------------------------------------------------
      0       MTM       0         14       2X57AA
      1       MTM       0         15       2X57AA
      2       RSM       0         14       2X57AA
      3       RSM       0         15       2X57AA
```

Datafilling table LTDSD

Table LTDSD identifies the SD points that drive the applique circuit during mechanized loop tests. The applique circuit works with a 2X90AD test trunk. The applique circuit reports line card diagnostic results to mechanized loop testing equipment. The mechanized loop testing equipment includes a mechanized loop tester or line test desk.

The applique circuit uses four SD points. These points belong to a minimum of one SD groups. The SDGRP table define the SD groups. You must enter data in the SDGRP table before you enter data in table LTDSD. The SD points must belong to the same SD group.

You must enter data in table TRKMEM before you enter data in table LTDSD. The trunk member is a key identification in table LTDSD. Valid trunk group members belong to trunk groups of type *test desk* and version MLT or TSTDK.

Datafill example for table LTDSD The sample datafill for table LTDSD appears in the following table.

MAP example for table LTDSD

```
TDMEM TDSDGRP1 TDSDPT1 TDSDGRP2 TDSDPT2 TDSDGRP3 TDSDPT3 TDSDGRP4 TDSDPT4
-------------------------------------------------------------------------
MLTTRK 1     6       5        6       6        7       0        7       1
```

Datafilling table LNINV

The user enters subscriber lines that connect to RCU line cards in the Line Inventory (LNINV) table. This table defines the LEN of a line. This table defines the hardware characteristics of the LEN. The LEN of a line indicates the software location.

Basic Call Processing (continued)

You must enter data in table RCUINV before you enter data in table LNINV. The DMS-100 switch must acknowledge the RCU before the DMS-100 can acknowledge the lines on the RCU.

When the addition, deletion or change of tuples occurs in table LNINV, the system updates SMU static data.

The datafill for Basic Call Processing for table LNINV appears in the following table. The fields that apply directly to Basic Call Processing appear in this table.

For a description of the other fields, refer to the data schema section of this document.

Datafilling table LNINV (Sheet 1 of 3)

Field	Subfield or refinement	Entry	Explanation and action
LEN		alphanumeric	Line equipment number. This field contains the following subfields: • SITE • FRAME • UNIT • LSG • CIRCUIT
	SITE	alphanumeric	Site. Enter the location of the RCU (alphanumeric). This entry is not optional. This entry does not have an assigned default value.
LEN (continued)	FRAME	0 to 511	Frame. Enter the remote concentrator module frame number. This frame number is not a physical frame. This frame number is a software entity that identifies the RCU modules that shares the same metallic test pair. The RCU modules that share the same metallic test pair are assigned the same frame number.
	UNIT	0 to 9	Unit. Enter the remote concentrator module unit number.
	LSG	0 to 18	Line subgroup. Enter the line subgroup of the RCU on which the line is assigned.

Datafilling table LNINV (Sheet 2 of 3)

Field	Subfield or refinement	Entry	Explanation and action
	CIRCUIT	0 to 31	Line card circuit number. Enter the line card circuit number of the line subgroup to which the card is assigned. The system must assign coin cards to even-numbered circuits.
CARDCODE		alphanumeric	Card code. Enter the product engineering code (PEC) of the line card or line card carrier. The range of values includes the following: • 3A06AA • 3A06BA • 3A06BB • 3A06BC • 3A06BD • 3A07AA • 3A07BA • 3A19AB • 3A27AA • 7A31AA • 7A33AA
PADGRP		character	Pad group. Enter the name of the pad group assigned to the line circuit in the pad data table. The range of values includes the following: • STDLN • UNBAL • PPHON • RCT • LRLM • NPDGP

Basic Call Processing (continued)

Datafilling table LNINV (Sheet 3 of 3)

Field	Subfield or refinement	Entry	Explanation and action
STATUS		character	Status. Enter the line inventory availability status. The range of values includes the following: • HASU • WORKING • UNEQUIP • CUTOFF • RESERVED
GND		Y or N	Ground. When line is ground start, enter Y. Enter N for loop start.
BNV		L or NL	Balanced network value. Enter L when line circuit is configured for a loaded network. Enter NL for nonloaded network.
MNO		Y or N	Manual override. Enter Y when on-hook balance network test cannot update field BNV in this table. Enter N to allow off-hook balance network test to update field BNV in this table.
CARDINFO		character	Card information. The NIL value is the default. Refer to the table in the next section for more information on how to enter data in this field. The range is NIL, RCUPOTS, RCUEPOTS, ISLCC, or SSLCC.

How line card configurations affect line card datafill Before BCS30, table LNINV extended the range of card code values that the user can enter. In BCS30, this table extends and changes to accommodate the current line card and line card carrier configurations. The addition of a new field, CARDINFO, occurred.

When data entry occurs in LNINV, the value of the CARDINFO field in subfield CARDTYPE for all tuples is the default NIL. If the CARDCODE is 3A06BA or 3A07BA or versions that follow 3A07BA, the subfield CARDTYPE is RCUPOTS or RCUEPOTS. The subfield CARDTYPE is RCUPOTS for a plain old telephone service (POTS) card. The subfield CARDTYPE is RCUEPOTS for an EPOTS card.

Operating company personnel can upgrade a 3A06 line card carrier to a version that follows the 3A06 line card carrier. An example of an upgrade is a change from 3A06AA to 3A06BA. Operating company personnel can change RCU line inventory and not cause a service interruption. The system updates the card codes of the lines in the carrier to the card code of the line that operating company personnel change.

The automatic system update removes the requirement to decommission lines when an upgrade to a new line card carrier occurs. Lines that associate with the line card carrier remain in service during the LNINV tuple change.

The CARDTYPE subfield defaults to RCUPOTS for line cards in the carrier, except for the line that changes. Manual entry during the tuple change operation controls the CARDTYPE value for this line.

A card code can change from 3A06AA to 3A06BA or versions that follow 3A06BA. The card code change cannot occur if any line in the line card carrier is assigned the COD option.

Tthe relationship between the line card, the carriers and the data entries in table LNINV appears in the following table.

Line cards, line card carriers and datafill (Sheet 1 of 2)

Carrier	Card	Lines for each carrier	CARDCODE	CARDINFO
NT3A06AA (POTS)	NT3A10AA/AB (POTS)	8	3A07AA	NIL
	NT3A10HA (EPOTS)	8	3A07BA	RCUPOTS
NT3A06BC (EPOTS)	NT3A10AA/AB (POTS)	8	3A07BA	RCUEPOTS
NT3A07AA/AB (FSR)	NT3A10AA/AB (POTS)	8	3A07AA	NIL
	NT3A10HA (EPOTS)	8	3A07AA	NIL
NT3A07BA (EFSR)	NT3A10AA/AB (POTS)	8	3A07BA	RCUPOTS
	NT3A10HA (EPOTS)	8	3A07BA	RCUPOTS

Basic Call Processing (continued)

Line cards, line card carriers and datafill (Sheet 2 of 2)

Carrier	Card	Lines for each carrier	CARDCODE	CARDINFO
NT3A19AA/AB (MPDR)	NT3A19AA/AB	8	3A19AB	NIL
	NT3A27AA (COIN)	4	3A27AA	NIL
NT3A11CA (ISLC)	NT7A31AA (ISDN)	4	7A31AA	NIL
NT3A11CA	NT7A33AA (MBS)	4	7A33AA	NIL

The configuration guidelines for NT3A10AA/AB apply to POTS line card versions that follow the NT3A10AA/AB.

The line card code has a two-letter suffix. The suffix for 3A07BA is BA. The first letter of the suffix in this example, B, determines the ability of the card. The first letter can determine if the card supports POTS or EPOTS service.

Note: If only the second letter of the suffix changes, the LNINV card code does *not* change. This change can occur after the development of a new version of an RCU card.

Using the RCU Line Card Configuration feature AF2668 Feature AF2668 is part of the required NTX901AA package. Feature AF2668 allows the operating company to enter data in table LNINV when the STATUS field in this table is UNEQUIP. This feature allows the entry of data without the generation of configuration alarms.

The operating company can use the UNEQUIP field to indicate that the line hardware is not present in the RCU. The operating company can add the line hardware and assign a directory number (DN). The operating company can use SERVORD and have the line set as WORKING to perform this task.

The STATUS field of table LNINV takes on the following meanings with AF2668:

- UNEQUIP—Entry of the the line equipment occurs in table LNINV. The line hardware is not always present in the RCU.
- HASU—Entry of the line equipment occurs in table LNINV. Line equipment is present in the RCU. The line does not have the DN assigned.
- WORKING—Entry of the line equipment occurs in table LNINV. The line equipment is present in the RCU and has a DN assigned to that line.

Datafilling LNINV to disable configuration alarms Make sure *each* line entered for a line card carrier has the state of UNEQUIP. This procedure allows the user to enter data in RCU lines with the configuration alarms disabled.

Enabling the configuration alarms Configuration alarms are enabled against the line card carrier when the status of *any* line entered for the LCC changes from UNEQUIP. Operating company personnel can change the status in the following ways:

- Table editor—Operating company personnel change the STATUS field of a line to HASU. A configuration alarm against the LCC of the line can occur if the RCU detects a configuration mismatch.
- Service orders—When operating company personnel enter an RCU line as UNEQUIP, operating company personnel can assign a DN. Operating company personnel can have the STATUS of the line changed to WORKING.

When the STATUS changes, the system enables the configuration alarm. The key word is *enabled*. The line configuration can be correct when you change the state of a line. In this condition, the system does not raise a configuration alarm.

The following figure describes how to change the STATUS field.

Note: The system does not permit a direct change from WORKING to UNEQUIP.

This feature affects POTS RCU lines:

- 3A06AA—POTS
- 3A06BA—EPOTS
- 3A07AA—FSR
- 3A07BA—EFSR

Basic Call Processing (continued)

- 3A19AB—MPDR
- 3A27AA—Coin

This feature does not affect the RCU lines that use the subfield INSVC of field CARDINFO. For these cards, the INSVC field enables or disables alarms.

Changing the STATUS field

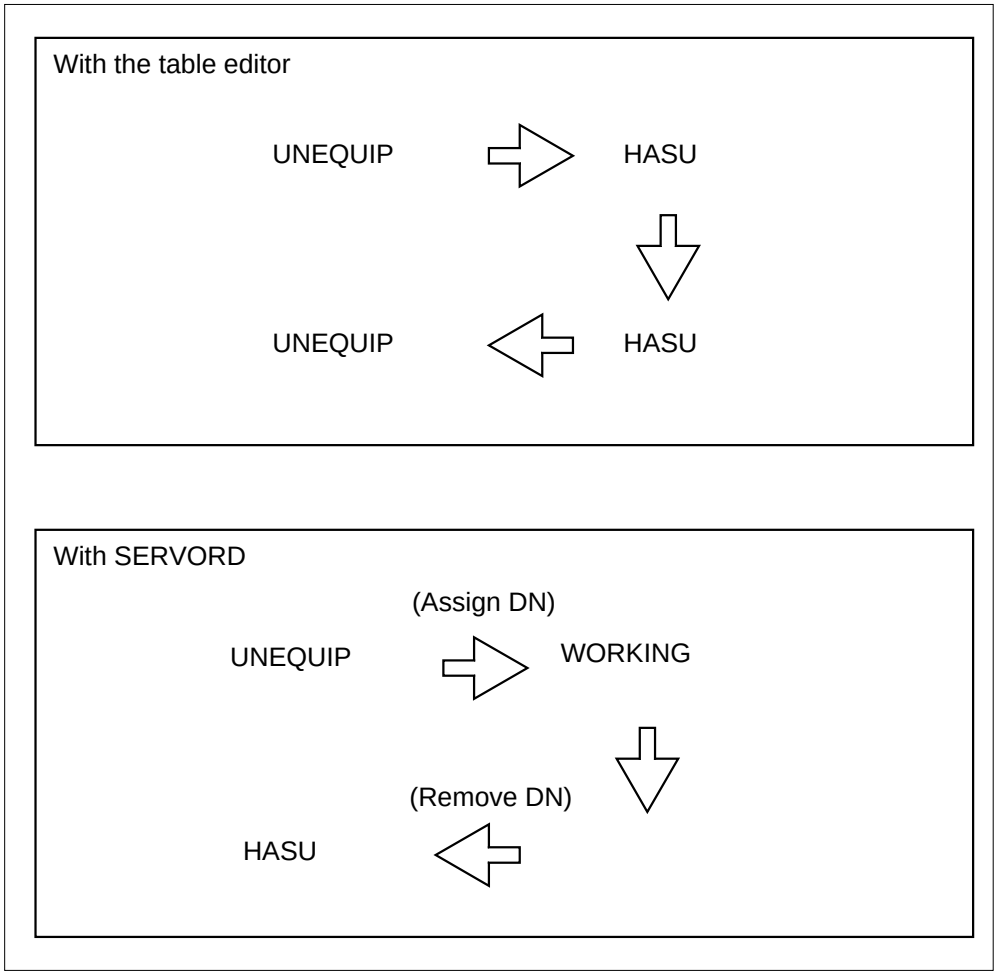

Datafill example for table LNINV The sample datafill for table LNINV appears in the following table.

MAP example for table LNINV

```
LEN           CARDCODE  PADGRP STATUS  GND   BNV  MNO
CARDINFO
------------------------------------------------
REM1 00 0 00 00  3X06AA  STDLN  WORKING   N   NL   N
NIL
REM1 00 0 03 24  3X06BA  STDLN  WORKING   N   NL   N
RCUPOTS
REM1 00 0 08 08  7A33AA  STDLN  WORKING   N   NL   Y
NIL
REM1 00 0 13 00  7A31AA  STDLN  WORKING   N   NL   Y
NIL
REM1 00 1 00 00  7A31AA  NPDGP  WORKING   N   NL   Y
NIL
REM1 00 1 00 14  7A33AA  PPHON  WORKING   N   NL   Y
NIL
```

The numbering scheme used for the LEN appears in the following sections.

Physical and logical line numbering schemes Subscriber lines connect to RCU line cards. The RCU line cards insert in slots on an RCU shelf. An RCU contains a maximum of five shelves, numbered one to five from the floor up. These shelves form an RCU bay. The configuration of an RCU module or bay appears in the following figure.

A power shelf does not have slots available for line card carriers. The power shelf appears in the following figure. Control shelf 1 has 12 slots available and control shelf 2 has 14 slots available. Line shelves 1 and 2 each have 20 slots available for line card carriers.

A subscriber line appears at the maintenance card faceplate. One of the shelf numbers and slot numbers and a subscriber line number appears.

Basic Call Processing (continued)

RCU module design

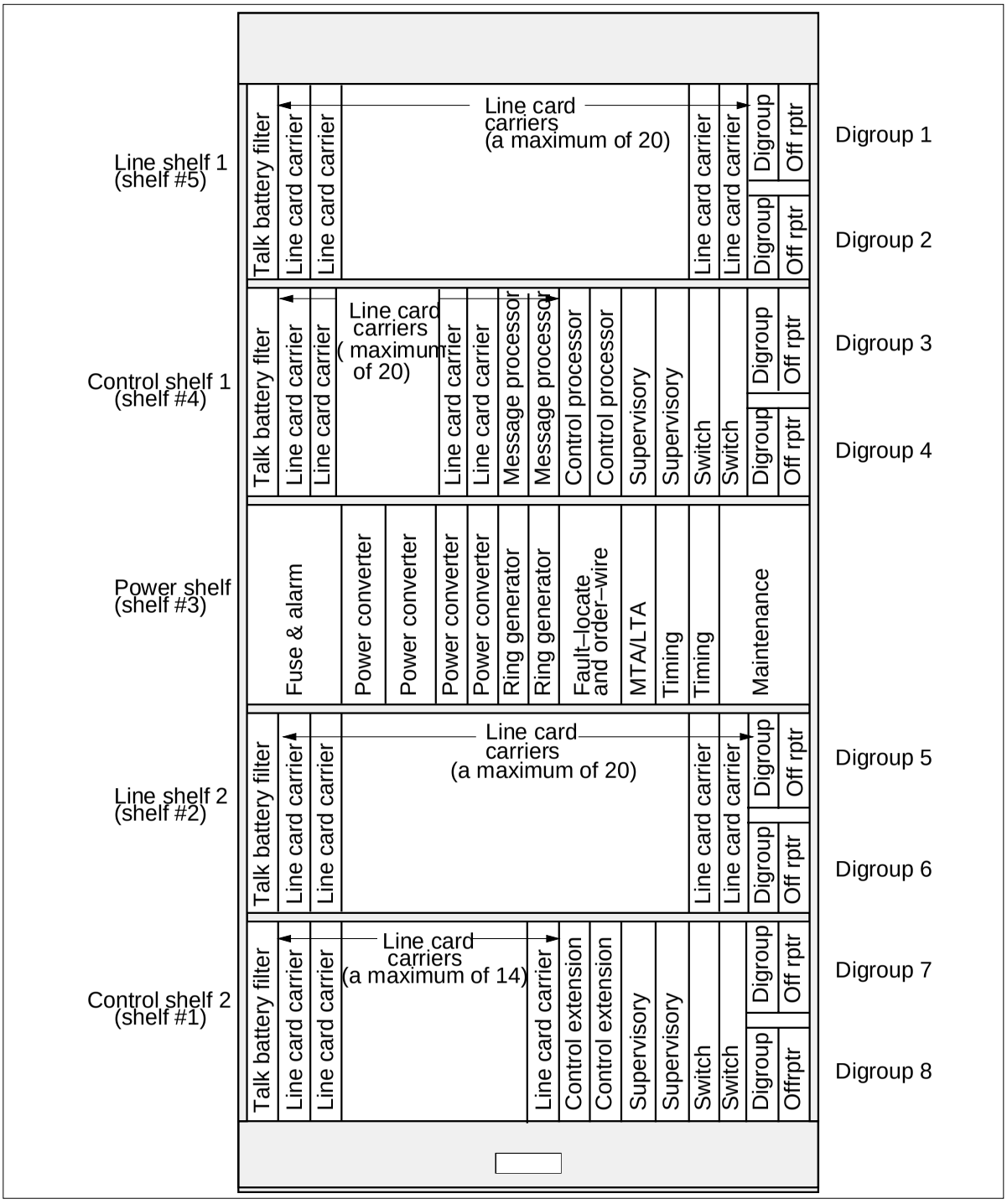

RCU configuration with line subgroup names

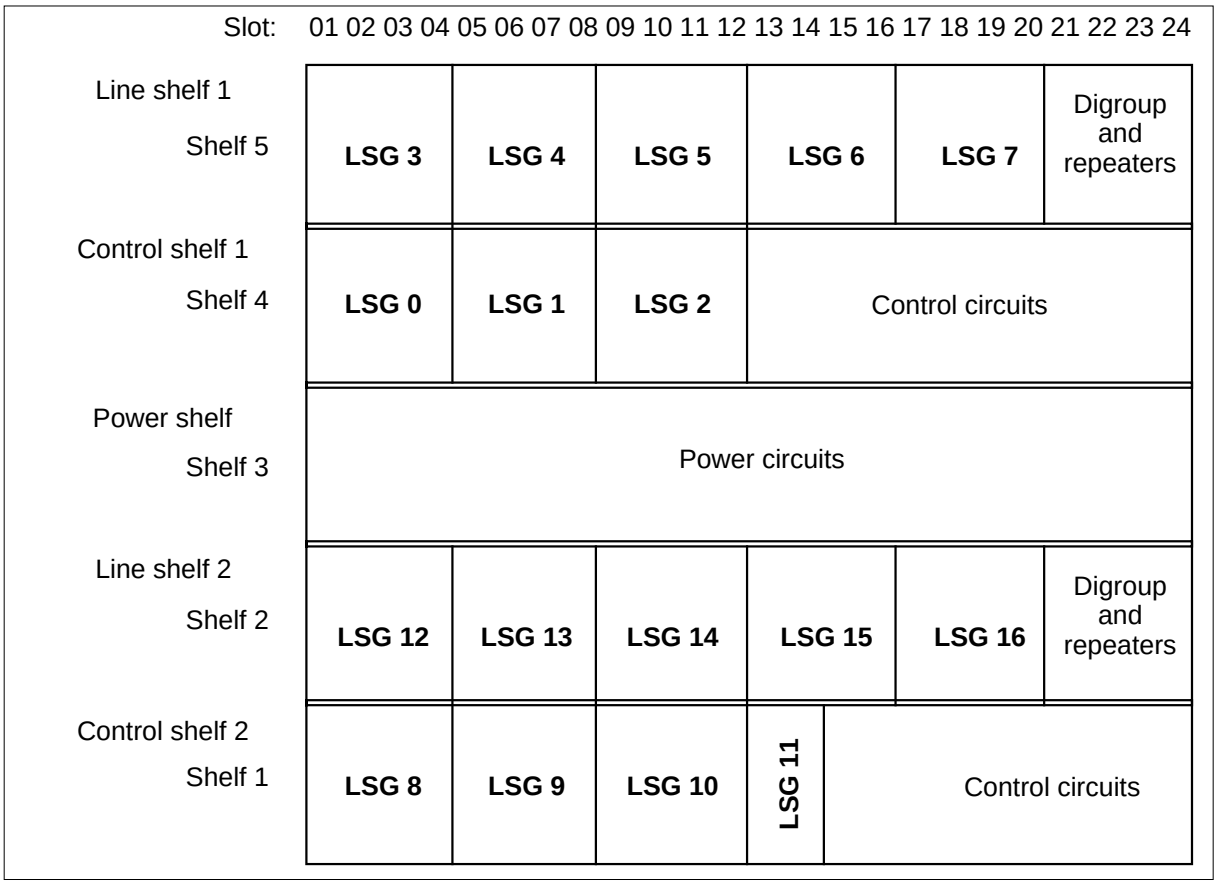

Single-party, FSR, and multiparty line card carriers hold four line cards. Each line card supports two subscriber lines. A coin card provides four lines. Coin lines must be assigned to the even-numbered logical circuits associated with each slot.

The logical circuits associated with the physical slots in a line subgroup appear in the following figures.

Basic Call Processing (continued)

RCU logical and physical line numbering

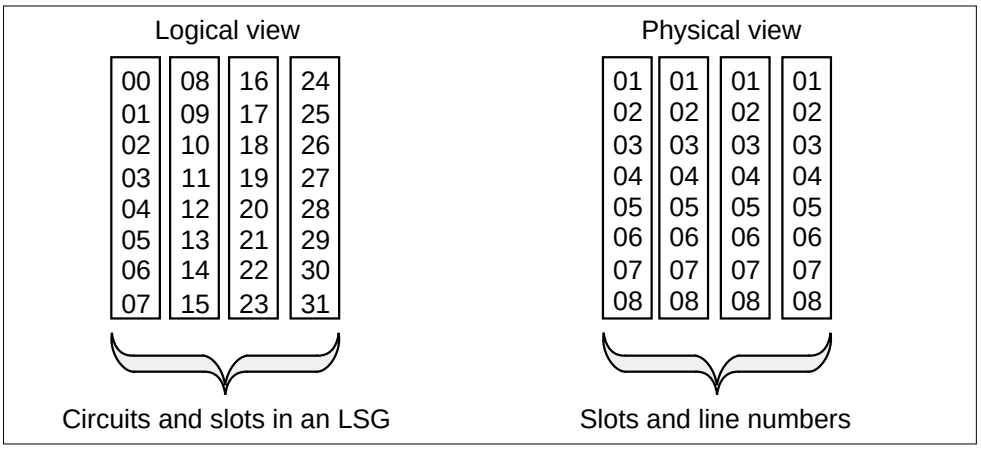

Subscriber line numbers

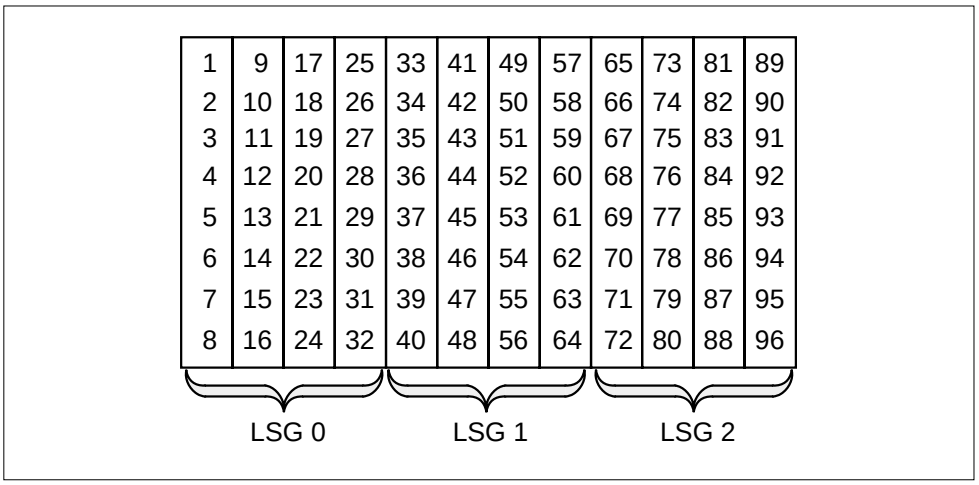

A LEN can logically identify a subscriber line in software. This number is the key to several data schema tables. These tables include the LNINV table.

The parts of the LEN are as follows:

- *Site* is a four-character image of the RCU location. If the site name is HOST, the RCU is in the central office with the DMS-100 switch. If the destination is other than HOST, the RCU location is remote.
- *Frame* is a software entity and not a physical frame. The RCU is assigned to this frame. The range is 0 to 99.

- *Unit* is the logical unit number of the RCU. The range is 0 to 9. Each RCU that shares site and frame names with other RCU modules must have a different unit number.
- *Line subgroup* is the RCU slots in a shelf. The RCU slots in a shelf form line subgroups. Each subgroup contains four slots. The range of this field is 0 to 19. The RCU has subgroups 0 to 16.
- *Circuit* is the subscriber line number. The subscriber line number corresponds to a circuit number. A maximum of 32 circuits occupy a line subgroup. This field has a range of 0 to 31. Coin cards can have only even-numbered circuits in each of the four slots in a subgroup. The sample RCU configuration with line subgroup names shows a line subgroup. If a coin card occupies the third slot of the subgroup, only circuits 16, 18, 20 and 22 can be assigned. An attempt to assign circuit numbers 17, 19, 21 or 23 causes an error message.

The site, frame and unit names of the LEN identify the RCU to which a subscriber line connects. The line subgroup and circuit identify the subscriber line that connects to the RCU.

The change of a line from a physical format to the logical format group has the following requirements:

- the placement of four RCU slots in one LEN subgroup
- the assignment of a number to the LEN subgroup

The physical format of a line is the shelf or slot line number. The logical format of a line is the line subgroup and circuit. Four RCU slots provide a maximum of 32 lines.

The division of an RCU module to line subgroups appears in the previous figure. A comparison of the figures determines which slot on an RCU shelf associates with a line subgroup. The circuit numbers of RCU subscriber lines and the equivalent physical line numbers appear in the previous figure.

Line subgroup 11 holds two line card carriers. The line card carriers can support 16 subscriber lines. A line subgroup supports a maximum of 32 subscriber lines. The system recognizes the 16 subscriber lines that remain in line subgroup 11, as unequipped. The 16 subscriber lines make this subgroup complete.

Using the RCULEN command You can enter the RCULEN command from the CI level of the MAP display. The switch operator can use this command to enter lines of data in the LNINV table. This command accepts the parameters RCU shelf, slot and line number as input. The system can

Basic Call Processing (continued)

generate the line subgroup and circuit of the LEN. The system can accept the facility number pair.

The switch operator does not need to cross check physical equipment against the LEN. The command CKTLOC also shows logical and physical numbering for the RCU under the MAP display.

Preparing charts for individual line numbering Operating companies must prepare charts for individual line numbering. The charts describe the association of subscriber line numbers to the slot position these numbers occupy. Each line number is in a slot in each RCU subgroup. The preparation of these charts facilitates the maintenance of records.

The numbers range from 1 to 96. Numbers 97 to 112 are not used. The numbers begin again at 113 in line subgroup 3. The numbers continue in a sequence through each subgroup and end at 544 on line subgroup 16. Line subgroup 11 contains two slots instead of four.

Datafilling table SPECCONN

Use table SPECCONN to enter special connections to provide ISDN services. Each entry in this table describes the special connection endpoints that identify the terminals to connect.

The the datafill for Basic Call Processing for table SPECCONN appears in the following table. The fields that apply directly to Basic Call Processing appear.

For a description of other fields, refer to the data schema section of this document.

Datafilling table SPECCONN (Sheet 1 of 3)

Field	Subfield or refinement	Entry	Explanation and action
ENDPT1		refer to subfield	Endpoint 1. Refer to subfield SCSEL for endpoint 1. ***Note:*** Make changes to fields with multiple entries in the PROMPT mode only.
	SCSEL	alphanumeric	Special connection selector. Enter the type of selector for the endpoint. The range of values includes DS1, ISLC, DCHCHNL. For DS1, a system prompt appears for fields PMTYPE, PMNO, PMCKTNO, and PMCKTTS. For ISLC, a system prompt appears for field LEN and its subfields. For DCHCHNL, a system prompt appears for fields ISGNO and CHNL.
If selector is DS 1:			
PMTYPE		character	The PM type. Enter SMU.
SMUNO		0 to 511	The SMU number. Enter the number of the SMU associated with the special service connection.
SMUCKTNO		0 to 19	The SMU circuit number. Enter the P-side port number of the SMU associated with the DS-1 line used for the special service connection.
SMUCKTTS		1 to 24	The SMU time slot. Enter the time slot channel used as an endpoint in the connection.
If selector is ISLC:			

Basic Call Processing (continued)

Datafilling table SPECCONN (Sheet 2 of 3)

Field	Subfield or refinement	Entry	Explanation and action
LEN		refer to subfields	Line equipment number. This field contains the following subfields: • SITE • FRAME • UNIT • LSG • CIRCUIT • CHNL
	SITE	alphanumeric	Site. Enter the alphanumeric location of the RCU. This entry is not optional. This entry does not have an assigned default value.
	FRAME	0 to 99	Frame. Enter the remote concentrator module frame number. The frame is not a physical frame. The frame is a software entity that identifies the RCU modules that share the same metallic test pair. All RCU modules that share the same metallic test pair have the same frame number.
	UNIT	0 to 9	Unit. Enter the remote concentrator module unit number.
	LSG	0 to 16	Line subgroup. Enter the line subgroup of the RCU for the line.
	CIRCUIT	0 to 31	Line card circuit number. Enter the line card circuit number of the line subgroup of the card.
	CHNL	alphanumeric	Channel. Identifies the type of channel on the ISDN loop. The range of values includes B1 and B2.
If selector is DCHCHNL:			
ISGNO		0 to 255	The ISDN service group number. Enter the ISG number identified in table ISGDEF.

Datafilling table SPECCONN (Sheet 3 of 3)

Field	Subfield or refinement	Entry	Explanation and action
CHNL		0 to 31	Channel number. Enter the channel number on the DCH.
ENDPT2		alphanumeric	Endpoint 2. Refer to subfield SCSEL for endpoint 1.

Datafill limits The following limits apply to ISDN and MBS special connections on an SMU-RCU system:

- The ISDN endpoints on an SMU-RCU system are the only SMU-RCU endpoints allowed in a network connection.
- The RCUL and DS0T selector values are for special services. The RCUL and DS0T cannot connect to ISDN endpoints.
- Limits apply to the number of special connections that terminate on an RCU. The number must be equal to or less than the number of DS0 channels provisioned for the RCU in table RCUINV.
- Each integrated services line card carrier (ISLCC) with a minimum one ISDN or MBS line entered as WORKING in table LNINV requires a DS0. The DS0 carries the D-channel traffic between the SMU and RCU.
- An ISDN line card in position four of an ISLCC (NT3A11CA) provides only one B-channel. The B1 channel on the card is the only B-channel available for ISDN special connections.

Datafill example for table SPECCONN The sample datafill for table SPECCONN appears in the following table. The first example describes a Bd connection that uses DCHCHNL and DS1 as selectors.

MAP example for table SPECCONN

```
FIELD NAME     FIELD VALUE
_____________________________________________________

ENDPT1         DCHCHNL RCU 6 1
ENDPT2         DS1 SMU 0 0 24
CONTYPE        CON
STATUS         ACTIVE
```

An example of a B-channel connection that uses ISLC selectors appears in the following table.

Basic Call Processing (continued)

MAP example for table SPECCONN

```
FIELD NAME    FIELD VALUE

ENDPT1        ISLC RCU0 0 0 0 2 B1
ENDPT2        ISLC RCU0 0 0 0 10 B2
CONTYPE       CON
STATUS        ACTIVE
```

An example of a Bb connection that uses ISLC and DS1 as selectors appears in the following table.

MAP example for table SPECCONN

```
FIELD NAME    FIELD VALUE

ENDPT1        ISLC RCU0 0 0 0 6 B1
ENDPT2        DS1 SMU 0 0 24
CONTYPE       CON
STATUS        ACTIVE
```

Datafilling table MTAMDRVE

The MTA network is a matrix of vertical and horizontal crosspoints that functions like a minibar. This matrix connects specified verticals to horizontals in the network.

The MTA connects test equipment to a circuit that requires tests. The test equipment connects to a horizontal. The circuit to test connects to a vertical.

A number of smaller minibar circuits interconnect to construct an MTA network of the required size. These smaller minibar circuits are building block parts. These partss appear in the following figure.

The NT3X09AA driver allows MTA to remote line concentrating devices. These devices include the RCU. The NT3X09AA is a four vertical by eight horizontal circuit. The NT3X09BA is an eight vertical by eight horizontal circuit.

MTA matrix

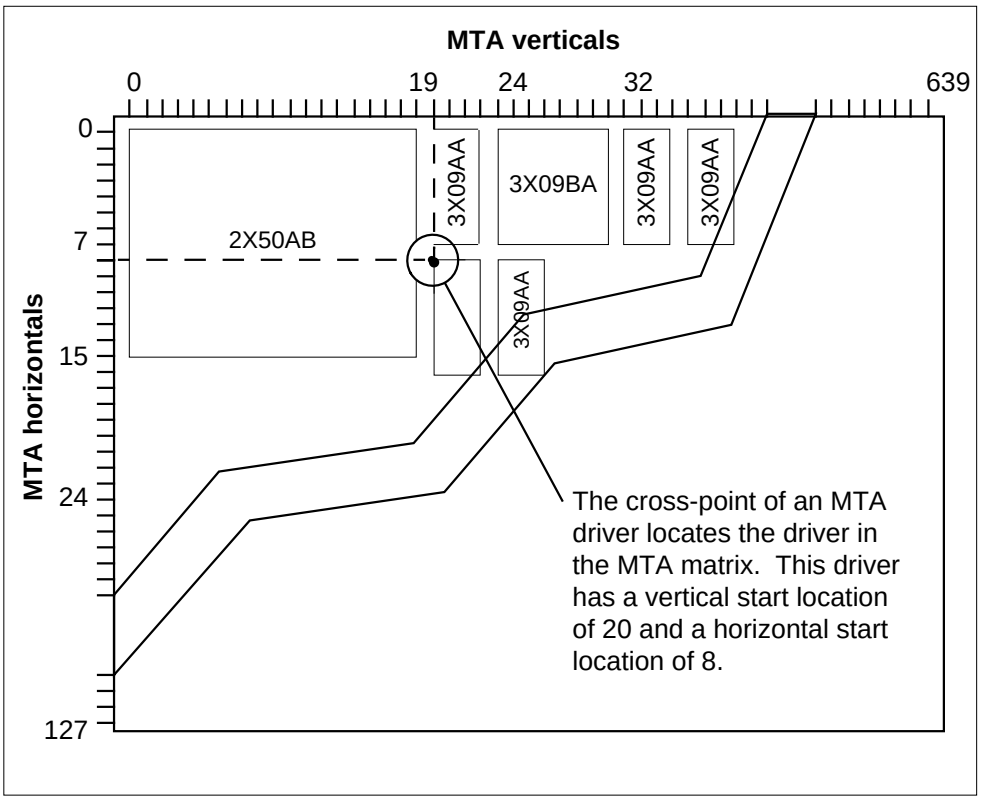

The MTA minibar driver (MTAMDRVE) table specifies the physical location and the type of the minibar driver assigned to the minibar switch. The NT2X50AB driver is part of the NT2X46 minibar switch.

The NT3X09 driver has relays on the card and does not require an associated minibar switch. The 0, 0 crosspoint in the matrix identifies each minibar driver.

Basic Call Processing (continued)

Example MTA configuration

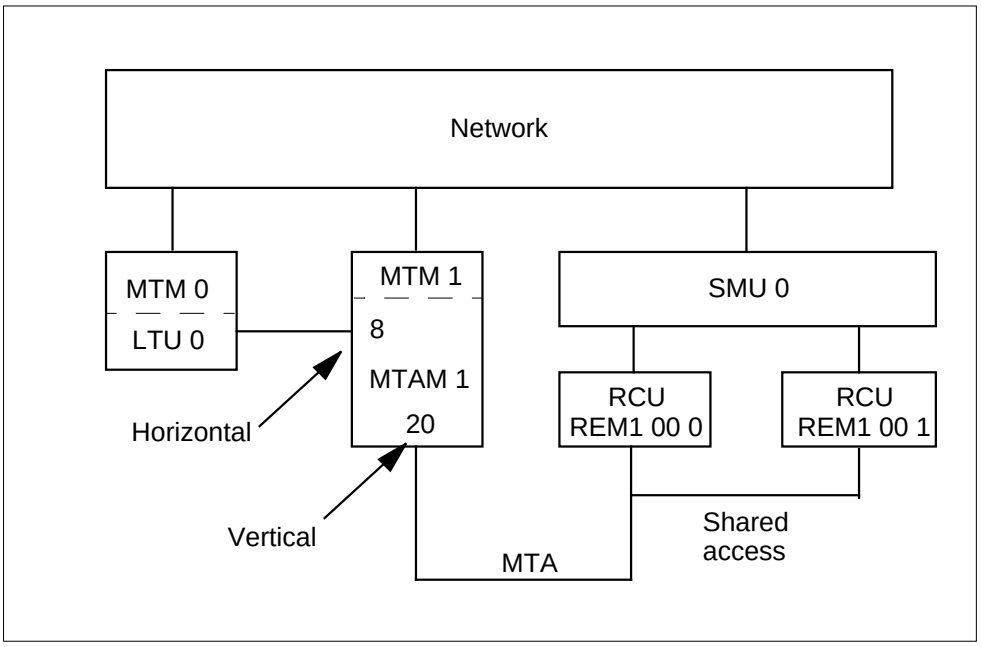

The datafill for Basic Call Processing for table MTAMDRVE appears in the following table. The fields that apply directly to Basic Call Processing appear.

For a description of the other fields, refer to the data schema section of this document.

Datafilling table MTAMDRVE (Sheet 1 of 2)

Field	Subfield or refinement	Entry	Explanation and action
MTAMEM		0	The MTA minibar driver member. Contains subfield MTAMEM. This subfield is the key to the table.
	MTAMEM	0 to 511	The MTA minibar driver member. Enter the MTA driver member number.Unit number.
VERT		0 to 1023	The MTAM driver vertical start location. Enter the vertical start location for the MTAM driver. The range is 0 to 639.
HORIZ		0 to 127	The MTAM driver horizontal start location. Enter the horizontal start location for the MTAM driver. The range is 0 to 127.

Datafilling table MTAMDRVE (Sheet 2 of 2)

Field	Subfield or refinement	Entry	Explanation and action
TMTYPE		character	Trunk module type. Enter the type of trunk module that contains the minibar driver. In this occurrence, the MTM is the minibar driver.
TMNO		0 to 2047	Trunk module number. Enter the number assigned to the maintenance trunk module.
TMCKTNO		0 to 28 (even numbers only)	Trunk module circuit number. Enter the circuit number of the MTM to which the minibar driver is assigned.
MTACARD		alphanumeric	The MTAM driver card. Enter the card code for the metallic test access minibar driver card. The range is 2X50AB, 3X09AA and 3X09BA.

Datafill example for table MTAMDRVE The sample datafill for table MTAMDRVE appears in the following table.

MAP example for table MTAMDRVE

```
MTAMEM   VERT HORIZ     TMTYPE   TMNO TMCKTNO   MTACARD
     1     20     8        MTM      1       10    3X09AA
```

Datafilling table MTAVERT

The assignment of horizontal agents to a horizontal and horizontal group of MTAMs appears in the MTA horizontal connection (MTAHORIZ) table.

Horizontal agents include the following:

- LTUs
- metallic test units (MTUs)
- operator verification
- metallic jacks
- incoming test access trunks
- extended metallic test access
- short circuits

Basic Call Processing (continued)

Datafill for Basic Call Processing for table MTAVERT appears in the following table. The fields that apply to Basic Call Processing appear in the table.

For a description of the other fields, refer to the data schema section of this document.

Datafilling table MTAVERT

Field	Subfield or refinement	Entry	Explanation and action
VERT		numeric	Vertical. Enter the MTA vertical connection number.
VERTCONN		character	Vertical connection. Enter M to indicate multiple connections. A maximum of 32 RCU modules can share a metallic test pair.
SELECTOR		alphanumeric	Use selector O when the entry in VERTCONN is M. Enter subfields SITE, FRAME and UNIT after the selector. This vector has a maximum of 32 entries. ***Note:*** Make changes to fields with multiple entries in the PROMPT mode only.
	SITE	character	Site name. Enter the name selected for the remote location.
	FRAME	numeric	Frame number. Enter the frame number.
	UNIT	numeric	Unit number. Enter the unit number.
	CONTMARK	+ or $	Continuation mark. Enter a plus sign (+) when the next record indicates additional data. In any other condition, enter a dollar sign ($) after the last record.

Datafill example for table MTAVERT The sample datafill for table MTAVERT appears in the following table.

MAP example for table MTAVERET

```
VERT                                              VERTCONN
20              M (O REM1 00 0 ) (O REM1 00 1 ) $
```

Datafilling table MTAHORIZ

Different horizontal agents can use the same horizontal but must associate with different MTAMs or horizontal groups. A specified horizontal can have a maximum of 160 different horizontal agents.

The system can group a maximum of 32 MTAMs together to connect to a single horizontal agent. A horizontal agent can be used only once.

Horizontals are not reserved for dedicated LTUs. Non-dedicated LTUs do not have a limit on assignment.

An LTU can be assigned to the host switching unit. The horizontal to which the LTU is assigned is multiplied to all minibar switches assigned to the host switching unit. An LTU can be assigned to a remote location. The horizontal to which the LTU is assigned is multiplied to all minibar switches assigned to the remote location.

When the minibar switch is at the host switching unit, the assignment limit is not present. The assignment limit is not present for the assignment of incoming test and operator verification trunks. Each incoming test access trunk and operator verification trunk requires one horizontal.

When the MTA configuration is small or medium, the horizontals are multiplied. The horizontals assigned with incoming test access and operator verification trunks are multiplied to all minibar switches. The minibar switches are at the host switching unit.

When the minibar switch is remote from the host switching unit, all horizontals are available for the assignment of the following:

- incoming test access trunks
- operator verification trunks
- the extension of the metallic test access feature

Basic Call Processing (continued)

Each incoming test access trunk, operator verification trunk and vertical on the host minibar switch requires one horizontal. The system assigns the host minibar switch to a horizontal on the minibar switch at the remote or host location.

The maximum number of metallic jacks in each DMS-100 office is 256.

Refer to tables TRKGRP, TRKSGRP and TRKMEM for the assignment of the following:

- LTUs
- incoming test access and operator verification trunks to trunk group tables
- trunk subgroup tables
- trunk member tables

Each LTU or MTU must be entered in table TRKMEM before the LTU or MTU is added to table MTAHORIZ. If the LTU or MTU is deleted from table TRKMEM, the system marks the associated tuple in table MTAHORIZ as deleted. The system restores the tuple if the LTU or MTU is added again to table TRKMEM.

The system allocates the memory for this table to a maximum of 2000 tuples.

The datafill for Basic Call Processing for table MTAHORIZ appears in the following table. The fields that apply directly to Basic Call Processing appear. Refer to the data schema section of this document for a description of the other fields.

Datafilling table MTAHORIZ (Sheet 1 of 3)

Field	Subfield or refinement	Entry	Explanation and action
HORIZ		0 to 127	The MTA horizontal. Enter the MTA horizontal to which the test equipment connects. The test equipment is the horizontal agent.
HORIZGRP		0 to 159	The MTA horizontal group. Enter the horizontal group number that identifies the horizontal and the horizontal agent of the horizontal as a different tuple. The horizontal group allows assignment of different test equipment on the same MTA horizontal.

Datafilling table MTAHORIZ (Sheet 2 of 3)

Field	Subfield or refinement	Entry	Explanation and action
	SELECTOR	character	Selector. The range is S, L, T, B, E, MJ, J and LA. Enter S for a timed short circuit. Enter L for LTU or MTU assignment and complete subfields CLLI, EXTRKNM and ALTUSE. Enter T for incoming test access or operator verification trunk assignment. Complete subfields CLLI and EXTRKNM. Enter B for a board-to-board dedicated horizontal. Complete subfield BBTNR. Enter E to multiply a horizontal of a minibar switch from a host or remote to the vertical of a host minibar switch. Complete subfield EMTAVERT. Enter MJ for metallic connection to the tip and ring of the subscriber line. Complete subfields CLLI and MJACKNUM. Selectors J and LA are for licensee use only.
HORIZAGT		refer to subfields	Horizontal agent. This field contains several subfields. These subfields depend on the value of SELECTOR used. The following subfields apply when SELECTOR L is in use.
	CLLI	character	Common language location identifier. Enter LTU for line test unit. Enter MTU for metallic test unit. For operator verification or an incoming test access trunk, enter the alphanumeric code that represents this trunk group in table CLLI. Enter MJACK for metallic jack.
	EXTRKNM	0 to 9999	External trunk number. Enter the external trunk number assigned in table TRKMEM. The number is assigned to the line test unit, metallic test unit, operator verification trunk or the incoming test access trunk. The range is from 0 to 9999.

Basic Call Processing (continued)

Datafilling table MTAHORIZ (Sheet 3 of 3)

Field	Subfield or refinement	Entry	Explanation and action
	ALTUSE	Y or N	Automatic line test use. Enter Y to use line test equipment for automatic line testing (ALT). Enter N if you do not want to use line test equipment for ALT.
	BBTNR	0 to 7	Board-to-board testing number. Enter the number of the board-to-board set associated with this horizontal.
	EMTAVERT	0 to 1023	Extended metallic test access column. Enter the associated vertical on the MTA in the host to which the horizontal connects.
	MJACKNUM	1 to 256	Metallic jack number. When the entry in subfield CLLI is MJACK, enter the metallic jack number.
MTAGRP		numeric	The MTA group. This field contains a list of MTA drivers that multiply to the test equipment. This field is a vector of a maximum of 32 multiples of subfields MTAMEM and HORIZ. ***Note:*** Make changes to fields with multiple entries in the PROMPT mode only.
	MTAMEM	0 to 511	The MTA minibar driver member. Enter the MTAM driver member number to which the horizontal connects.
	HORIZ	0 to 15	This field is read-only. This field provides information about the physical horizontal to which the MTA drivers connect. Enter 0 to satisfy table control.
	CONTMARK	+ or $	Continuation Mark. Enter a plus sign (+) when the next record specifies additional data. Enter a dollar sign ($) after the last record.

Datafill example for table MTAHORIZ The sample datafill for table MTAHORIZ appears in the following table.

MAP example for table MTAHORIZ

```
HORIZ
    HORIZGRP                HORIZAGT
                                                    MTAGRP
_____________________________________________________________

8
      0       L          LTU   0 Y    ( 0 0) ( 2 0)$
```

Tools for verifying translations

Basic Call Processing does not use translation verification tools.

SERVORD

With the NTX387AC package, service orders for RCU lines are like service orders for other types of lines. Refer to *SERVORD Reference Manual* for information on RCU lines.

Note: The system does not support the change ISG (CISG) service order command for RCU ISDN or MBS lines.

Custom Local Area Signaling Services

Functional group

RES00001

RES00003

RES00006

Feature package

NTXQ70AA Universal Access to CLASS

NTXA01AA Calling Number Display

NTXA82AA Enablers CLASS LIOD

Release applicability

XPM05 and up

Prerequisites

To operate, Custom Local Area Signaling Services have the following prerequisites:

- New Peripheral Maintenance Package (NTX270AA)
- IBN-Enhanced Call Forwarding (NTX413AA or AB)
- Variable Speed Call Access Code - IBN (NTX898AA)
- Universal Tone Receiver Software (NTX269AA)

CLASS features and TR compliancy

Analog Display Services Interface (ADSI) and Spontaneous Call Waiting Identification (SCWID) features provide the capability to deliver CLASS features to customer premises equipment (CPE) that are compliant with Bellcore specifications TR-30, TR-575, and TR-1273.

The Deluxe SCWID (DSCWID) feature provides an interface to CPEs compliant with Bellcore specification TR-416. ADSI and DSCWID CLASS features can be added to RES and IBN Line Class Code (LCC) subscriber lines by using the Service Order System (SERVORD).

The following prerequisites are necessary to operate Bellcore compliant CLASS features ADSI and DSCWID.

- NTXP91AB ADSI Service Protocol Enablers
- NTXN97AB Call Waiting Display
- NTXQ91AA Enhanced Call Waiting Display

Description

CLASS features provide calling line identification and call management features to subscriber lines connected to an RCU. ADSI Services Protocol supports display-based CLASS features on ADSI-compatible CPEs. Following is a partial list of residential (RES) subscriber features. For a complete listing of feature group options see table FTRGOPTS in the data schema section of the *Translation Guide*.

- AR—Automatic Recall
- CFDA—Call Forward Don't Answer
- CWT—CLASS Message Waiting Indicator
- CNAMD—Calling Name Display
- CND—CAlling Number Display
- DDN—Dialable Delivery Number
- CWT—Call Waiting
- DSCWID—Spontaneous Call Waiting With Disposition

Analog Display Services Interface (ADSI) and Spontaneous Call Waiting Identification (SCWID) and SCWID with disposition (DSCWID), are CLASS features which may be added by the Change Service Orders (SERVORD) to a line.

Operation

Analog Display Services Interface (ADSI) allows the download of softkey and display information to an ADSI compatible CPE from the central control (CC). The static download of feature information to the CLASS Modem Resource (CMR) card in the SMU reduces the amount of data the CC must process in real time. To implement CLASS features, the CC must maintain close synchronization with the CPE at all times. The CC records historical information concerning CLASS call processing and disposition.

The Calling Number Delivery (CND) feature operates when a normal termination, call, occurs on a line with the CND option. The CC sends only the necessary caller information to the SMU.

Custom Local Area Signaling Services (continued)

After the first ring, during the first silent interval of at least 3 seconds, the SMU delivers the calling number and the date and time of the call, in an ADSI format, to customer's equipment through the CMR card. The toneset card, on the SMU, supplies Bellcore-compatible ADSI tones to the CPE when the CLASS features are activated.

The universal tone receiver (UTR) card in the SMU collects and interprets information tones from the CPE.

Translations table flow

Standard translations data flow is unaltered by this package.

Limitations and restrictions

The CPE with ADSI display capability that is compliant to Bellcore TR-30, TR-575, and TR-1273, is required to receive and display the calling number information. Noncompliant CPEs may use CLASS features, including DSCWID, not dependent on the ADSI feature. However, without the capability of displaying caller and softkey information, and because of precise signaling requirements, a subscriber with a non-ADSI set will only be able to use a subset of the available options.

The DSCWID CLASS feature:

- is not supported on Meridian Business Sets (MBS) or ISDN lines.
- is not compatible with the Do Not Disturb (DND) feature.
- cannot be added to a line that already has the Call Hold (CHD) option.

DSCWID can be assigned to a subscriber line with no CID features assigned. If the subscriber uses ALLCID as the off-hook delivery type, at least one of the following CLASS display options must be previously or concurrently assigned to a line.

- Calling Name Display (CNAMD)
- Calling Number Display (CND)
- Dialable Directory Number (DDN)

Assigning SCWID to a line using the SERVORD package automatically assigns the Call Waiting Option (CWT) to that line, and replaces older versions of SCWID.

Additional SMU hardware requirements to implement the Bellcore compliant ADSI and SCWID CLASS features are:

- The combined messaging and tone generator circuit card with ADSI, NT6X69AD, must be installed.
- The TONESET field in the table LTCINV must be set to North American ROM-based toneset with ADSI tone (NORTHAA) when the NTX6X69AD is used.
- The peripheral processor in the SMU must be the type MX77AA unified processor card.
- The CLASS Modem Resource (CMR) card, NTX6X78AB, must be installed and datafilled. After datafill, the CMR must be busied and returned to service to activate the CLASS ADSI compatible features.
- A Universal Tone Receiver (UTR), NT6X92BB, must be installed, datafilled, and available at call time.

Interactions

Custom Local Area Signaling Services has no functionality interactions.

Activation/deactivation by the end user

Custom Local Area Signaling Services requires no activation or deactivation by the end user.

Billing

Custom Local Area Signaling Services do not affect billing. Datafill for table AMAOPTS when using DSCWID is explained in the following examples.

Datafilling table AMAOPTS

The following table shows the datafill specific to the Custom Local Area Signaling Services feature, DSCWID, for table AMAOPTS. Only those fields that apply directly to Custom Local Area Signaling Services are shown. For

Custom Local Area Signaling Services (continued)

a description of the other fields, refer to the data schema section of the *Translation Guide*.

Datafilling table AMAOPTS

Field	Subfield or refinement	Entry	Explanation and action
OPTION	AMAOPT	DSCWID CONF_AUDIT	DSCWID conference audit. Key field in table AMAOPTS.
SCHEDULE	AMASEL	PERIODIC	AMA option selected. Available options are OFF, PERIODIC, or DEFAULT. ***Note:*** To enable the DSCWID conference audit, AMASEL must be set to PERIODIC, or DEFAULT where the DEFAULT is PERIODIC.

Datafill example for table AMAOPTS

The following example shows sample datafill for table AMAOPTS.

MAP display example for table AMAOPTS

```
>TABLE AMAOPTS
TABLE: AMAOPTS
>POS DSCWID_CONF_AUDIT
DSCWID_CONF_AUDIT
>CHA
TUPLE TO BE CHANGED:
DSCWID_CONF_AUDIT OFF
ENTER Y TO CONFIRM, N TO REJECT, OR E TO EDIT
>E
AMASEL: OFF
>PERIODIC
ONDATE:
>940915
ONTIME:
>0000
SCHEDULE:
>24 HRS
TUPLE TO BE CHANGED:
DSCWID_CONF_AUDIT PERIODIC 940915 0000 24  HRS
ENTER Y TO CONFIRM, N TO REJECT, OR E TO EDIT
Y
```

Custom Local Area Signaling Services (continued)

Station Message Detail Recording

Custom Local Area Signaling Services do not affect Station Message Detail Recording.

Datafilling office parameters

Custom Local Area Signaling Services do not affect office parameters.

Office parameters used by Custom Local Area Signaling Services

Table name	Parameter name	Explanation and action
OFCOPT	VSLE_PRESENT	Visual screen list editing. When set to N (no), the ADSI line option must be assigned to the subscriber line, in order for visual screen list editing (VSLE) to be accessed. When set to Y, VSLE can be accessed without ADSI being assigned to the line.

Datafill sequence

The following table lists the tables that require datafill to implement Custom Local Area Signaling Services . The tables are listed in the order they are to be datafilled.

Datafill tables required for Custom Local Area Signaling Services (Sheet 1 of 2)

Table	Purpose of table
LTCINV	Line Trunk Controller Inventory. Sets the inventories of various peripheral module types.
SOFTKEY	Softkey. Defines softkey information of the CPE for visual screen list editing (VSLE) only.
TEXTPHRS	Text Phrases. Contains the physical text phrases to be displayed on the CPE.
TEXTLOG	Logical Display Text. Contains the logical names of the physical text phrases. This table is for VSLE only.
DSCWDTYP	Deluxe Spontaneous Call Waiting Identification (DSCWID) type. Defines DSCWID treatment of subscriber lines.
RESOFC	Residential Line CLASS Office Data. Enable CLASS features globally on a DMS-100 family switch.
RESFEAT	Residential Line Feature. Table IBNLINES must be datafilled for the line that ADSI is being assigned.

Custom Local Area Signaling Services (continued)

Datafill tables required for Custom Local Area Signaling Services (Sheet 2 of 2)

Table	Purpose of table
AMAOPTS	AMA options. Controls the activation and scheduling for automatic message accounting (AMA).
OFCOPT	Defines office option parameters.

Datafilling table LTCINV

The following table shows the datafill specific to Custom Local Area Signaling Services for table LTCINV. Only those fields that apply directly to Custom Local Area Signaling Services are shown.

For a description of the other fields, refer to the data schema section of the *Translations Guide*.

Datafilling table LTCINV

Field	Subfield or refinement	Entry	Explanation and action
OPTCARD		MSG6X69 and CMR16	Optional card. The range of values for SMU includes MSG6X69 and CMR16. If CMR16 is entered, the user is prompted to enter the CMR software load name. ***Note:*** Changes to fields with multiple entries should be made in the PROMPT mode only.
TONESET		alphanumeric	Tone set. Enter the tone set which is appropriate for the switch being datafilled.
PECMX77		alphanumeric	MX77 type equipment product engineering codes (PECs). Enter the two-product engineering codes of the MX77 card. One PEC is required for each unit of the SMU. Enter the PEC for unit 0 first. The PEC datafilled for a unit must correspond to the minimum firmware capabilities among the MX77s in its processor complex. For example, if the UP is a MX77AA, enter MX77AA twice in this field.

Datafill example for table LTCINV

The following example shows sample datafill for table LTCINV.

MAP display example for table LTCINV

```
LTCNAME
   ADNUM FRTYPE FRNO SHPOS FLOOR ROW FRPOS EQPEC
LOAD                                          EXECTAB
                                             CSLNKTAB
                                              OPTCARD
TONESET      PECS6X45        E2LOAD
                                        OPTATTR PEC6X40
-------------------------------------------------------
SMU 0
     1000 SME   0    32   0    C    1 6X02AA    ESU06AZ
                     (POTS POTSEX) (KEYSET KSETEX)$
                   ( 0 40) ( 0 42) ( 0 30) ( 1 40)$
            (  MSG6X69 ) ( ISP ) (   CMR13 CMRAB02)$
NORTHAM    MX77AA  MX77AA MX77NH08
                                                  $
6X40AC
```

Datafilling table SOFTKEY

The following table shows the datafill specific to Custom Local Area Signaling Services for table SOFTKEY. Only those fields that apply directly to Custom Local Area Signaling Services are shown.

For a description of the other fields, refer to the data schema section of the *Translations Guide*.

Datafilling table SOFTKEY

Field	Subfield or refinement	Entry	Explanation and action
SERVID		alphanumeric up to 8 characters	Contains the application service identification of the feature that, together with DEFNUM, is the index into table SOFTKEY. Vector of 0 to 8 characters.
DEFNUM		2 to 33	Definer number. Contains a value of 2 to 33.
LLABEL		alphanumeric	Long label string identifier for softkey definer. Vector of 0 to 18 characters.
SLABEL		alphanumeric	Short label string identifier for softkey definer. Vector of 0 to 7 characters.
RETURN		alphanumeric	Return string vector. Vector of 0 to 14 characters. This string can cause the CPE to take actions.

Custom Local Area Signaling Services (continued)

Datafill example for table SOFTKEY

The following example shows sample datafill for table SOFTKEY.

MAP display example for table SOFTKEY

```
SERVID   DEFNUM     LLABEL
                 SLABEL
                                                RETURN
-------------------------------------------------------
CALLOG     4         TOP
                     TOP
                                                     $
CPE1       5          SOFTK02
                    SK02
                              (48) (50) (39) (78)  $
CPE2       6         SOFTK03
                   SK03
                              (48) (51) (39) (78)  $
```

Datafilling table TEXTPHRS

The following table shows the datafill specific to Custom Local Area Signaling Services for table TEXTPHRS. Only those fields that apply directly to Custom Local Area Signaling Services are shown.

For a description of the other fields, refer to the data schema section of the *Translations Guide*.

Datafilling table TEXTPHRS (Sheet 1 of 2)

Field	Subfield or refinement	Entry	Explanation and action
PHRSNAME		alphanumeric	Physical phrase name. Character name of the physical phrase.
PHRASE		alphanumeric up to 40 characters	Phrase. Physical instructional or prompting text string. Vector of up to 40 characters in single quotes. Display capabilities are for 20 characters at a time. The apostrophe (') is used to split text strings in excess of 20 characters.

Datafilling table TEXTPHRS (Sheet 2 of 2)

Field	Subfield or refinement	Entry	Explanation and action
HL MODE	POSITION	0 to 40	The first subfield specifies the character position of the change.
	MODE	see list	The range of values for the MODE subfield is normal, reverse, grey, and bold.

Datafill example for table TEXTPHRS

The following example shows sample datafill for table TEXTPHRS.

MAP display example for table TEXTPHRS

```
PHRSNAME                          PHRASE     HLMODE
-----------------------------------------------
CLCOUNT            GENERIC_CALLOG_ITEM_COUNT  $
CLNEWCT             GENERIC_CALLOG_NEW_COUNT  $
CLTITLE                 CALL_LOGGING_SERVICE  $
```

Datafilling table TEXTLOG

The following table shows the datafill specific to Custom Local Area Signaling Services for table TEXTLOG. Only those fields that apply directly to Custom Local Area Signaling Services are shown.

For a description of the other fields, refer to the data schema section of the *Translations Guide*.

Datafilling table TEXTLOG (Sheet 1 of 2)

Field	Subfield or refinement	Entry	Explanation and action
LPHRSKEY	APPLNAME	VLSE, CALLOG	Three part key made up of the application name, language, and a display number.
	LANGUAGE	NILANG, LANG1, LANG2	Enter the language used for the display.

Custom Local Area Signaling Services (continued)

Datafilling table TEXTLOG (Sheet 2 of 2)

Field	Subfield or refinement	Entry	Explanation and action
	DISPNUM	0 TO 127	Enter the numeric index the application identifies the display data contained in the tuple.
DISTYPE		C, S, or T	Display type character of set (standard, transient, cursor control)
LRCI		C, R, L, or I	Display justification indicator field: center, right, left, indent.
PHRLIST		alphanumeric up to 16 characters	Vector of phrase names from the table TEXTPHRS. If less than 16 characters are required, end the list with a dollar sign ($). ***Note:*** Changes to fields with multiple entries should be made in the PROMPT mode only.
DEFNLIST	SOFTKEY	1 to 33	Enter the list of up to 7 softkey definers. One is used as a NIL definer and allows unused softkeys to be unlabelled. ***Note:*** Changes to fields with multiple entries should be made in the PROMPT mode only.
	MODE	N, H	
	SKT	SRV, CPE	

Datafill example for table TEXTLOG

The following example shows sample datafill for table TEXTLOG.

MAP display example for table TEXTLOG

```
        LPHRSKEY  DISPTYPE  LRCI
                        PHRSLIST
                            DEFNLIST
-------------------------------------------------------
CALLOG  LANG1     1     S  LEFT
                          (CLTITLE) $
                          (2 N SRV) $
```

Datafilling table DSCWDTYP

The following table shows the datafill specific to Custom Local Area Signaling Services for table DSCWDTYP. Only those fields that apply directly to the DSCWID feature of Custom Local Area Signaling Services (CLASS) are shown. For a description of the other fields, refer to the data schema section of the *Translation Guide*.

Datafilling table DSCWDTYP (Sheet 1 of 2)

Field	Subfield or refinement	Entry	Explanation and action
NAME		up to 8 characters; see list	DSCWDTYP table key. The DSCWID types that can be assigned to subscriber tones. Options are PROPRITY ADSITIME, ADSICID, NODATA, NOCIDCW, and COMPLETE. ***Note:*** The PROPRITY tuple is fixed to accommodate the proprietary DSCWID feature.
ALERT		see list	Type of tone ALERTING. The CPE will receive either SASONLY or SASCAS tones.
CID		see list	Caller ID delivery. Type of CID delivered during DSCWID session. Options are no data (NOCID), all data of CID type (ALLCID), and time and date only (TIMECID). Default: ALLCID.
NON ADSI		Y or N	Allow DSCWID features to a non ADSI sets. When set to N non ADSI sets can only signal ANSWER and RETRN. When set to Y non ADSI sets can signal all options in the KEYOPTS field.

Note 1: Operating company cannot change or delete the PROPRITY tuple and can only change (not delete) the other 5 initial tuples.

Note 2: ALERT type must be SASCAS to display ADSI complaint features. SASONLY alerting type provides a shorter call waiting function and uses less RCC2 resources for non ADSI type sets.

Note 3: If CID type specified is ALLCID, then a CID feature must be assigned in RESOFC.

Custom Local Area Signaling Services (continued)

Datafilling table DSCWDTYP (Sheet 2 of 2)

Field	Subfield or refinement	Entry	Explanation and action
COUNT		0 to 99,999	Line count. The number of lines assigned to this DSCWID type. ***Note:*** This field cannot be changed by the operating company and tuples can not deleted from table DSCWDTYP unless the count is 0.
KEY OPTS		up to 10 characters, see list	Softkey options. Softkey options available on this DSCWID type. Options are ALL, ANSWER, RETRN, FWD, BUSY, HOLD, DROP, CONF, DROPFRST, and DROPLAST. ***Note:*** Changes to fields with multiple entries should be made in the PROMPT mode only.
Note 1: Operating company cannot change or delete the PROPRITY tuple and can only change (not delete) the other 5 initial tuples. ***Note 2:*** ALERT type must be SASCAS to display ADSI complaint features. SASONLY alerting type provides a shorter call waiting function and uses less RCC2 resources for non ADSI type sets. ***Note 3:*** If CID type specified is ALLCID, then a CID feature must be assigned in RESOFC.			

Datafill example for table DSCWDTYP

The following example shows sample datafill for table DSCWDTYP.

MAP display example for table DSCWDTYP

```
Table: DSCWDTYP

NAME       ALERT    CID      NONADSI   KEYOPTS       COUNT
_____________________________________________________________

PROPRITY   SASCAS   ALLCID    N        ANS RET FWD     0
                                      BUSY HOLD
                                      DROP $

ADSITIME   SASCAS   TIMECID   N        ALL $           0

ADSICID    SASCAS   ALLCID    N        ALL $           0

NODATA     SASONLY  NOCID     Y        ALL $           0

NOCIDCW    SASCAS   TIMECID   Y        ALL $           0

COMPLETE   SASCAS   ALLCID    Y        ALL $           0
```

Datafilling table RESOFC

The following table shows the datafill specific to Custom Local Area Signaling Services for table RESOFC. Only those fields that apply directly to Custom Local Area Signaling Services are shown. For a description of the other fields, refer to the data schema section of the *Translation Guide*.

Datafilling table RESOFC (Sheet 1 of 4)

Field	Subfield or refinement	Entry	Explanation and action
KEY		see list of CLASS features	RSCOFC table key. CLASS feature name. Feature must be applied to a line in table RESFEAT to be activated.
ENABLED		Y or N	Feature enabled. When disabled (N) no line can use that CLASS feature.
ACCESS		SUBSCR	Type of access. Values: universal (UNIVER) or subscriber (SUBSCR). DSCWID cannot be assigned to UNVER access.
Note: If CFDA is not available and active and the default treatment assigned is FWD, the RING default is applied to the caller. A warning message stating the reason is displayed at the CC .			

Custom Local Area Signaling Services (continued)

Datafilling table RESOFC (Sheet 2 of 4)

Field	Subfield or refinement	Entry	Explanation and action
FEATNAME		DSCWID	CLASS feature name. Following subfields to be used if this is CLASS feature DSCWID: DTYPE, DEFTRMT, AMA, BUSYANNC, BUSYSUPV, DFLTANNC, DFLTSUPV, HOLDANNC, HOLDSUPV, REMINDER, TFLASH, TDEFAULT, THOLD, FNALANN. ***Note:*** Changes to fields with multiple entries should be made in the PROMPT mode only.
	DTYPE	see list	DCSWID type name. Name used to define DSCWID type name in table DSCWDTYP. Options are PROPRITY, ADSITIME, ADSICID, NODATA, NOCIDCW, COMPLETE. Default: COMPLETE.
FEATNAME (continued)	DEFTRMT	see list	Default treatment. Applied to incoming call when subscriber ignores the final call waiting alert. Options: • RING (DEF). Allow caller to continue hearing ringing while muting the subscriber alert tones. • ANNC. Connect caller to a specified TELCO announcement. • FWD. Forward to another line. Subscriber must previously have the Call Forward Don't Answer (CFDA) feature activated.
	AMA	see list	AMA recording status. For DSWCID enter NONE or record on use of the conference (CONF) option.
Note: If CFDA is not available and active and the default treatment assigned is FWD, the RING default is applied to the caller. A warning message stating the reason is displayed at the CC .			

Custom Local Area Signaling Services (continued)

Datafilling table RESOFC (Sheet 3 of 4)

Field	Subfield or refinement	Entry	Explanation and action
	BUSYANNC	character	Busy announcement. The location name of an announcement in table CLLI to be applied to the calling party if the BUSY option is chosen by the subscriber. ***Note:*** If BUSYANNC is not datafilled or the CLLI code is not effective, the default treatment is disconnect.
	BUSYSUPV	Y or N	Apply BUSY supervision. Determine if answer supervision is applied when first connecting to the BUSY announcement. Default: N.
FEATNAME (continued)	DFLTANNC	character	Default busy announcement. The location name of an announcement in table CLLI to be applied if field DEFTRMT is datafilled with ANNC and the subscriber ignores the final call waiting alert. ***Note:*** May be the same CLLI code as datafilled in BUSYANNC.
	DFLTSUPV	Y or N	Default supervision. Determine if answer supervision is applied when first connecting to the DFLTANNC announcement. Default: N.
	HOLDANNC	character	HOLD announcement. The location name of an announcement in table CLLI to be applied to the calling party if the HOLD option is chosen by the subscriber.
	HOLDSUPV	see list	HOLD supervision. Determine if answer supervision is applied when connecting to the HOLD announcement. Options: NO, BEFORE, or AFTER. Default: N.
	REMINDER	character	REMINDER announcement. The location name of an announcement in table CLLI to be applied to the calling party when the T-HOLD timer expires. ***Note:*** Normally used to advise caller to stay on the line.
Note: If CFDA is not available and active and the default treatment assigned is FWD, the RING default is applied to the caller. A warning message stating the reason is displayed at the CC .			

Custom Local Area Signaling Services (continued)

Datafilling table RESOFC (Sheet 4 of 4)

Field	Subfield or refinement	Entry	Explanation and action
	TFLASH	10 to 80 in increments of 5. 5=.5 sec	T-FLASH timer. Timer to allow non-ADSI customer time to signal the conference option after a flash. Default: 15 (1.5 seconds) ***Note:*** Used for the held call state. If the T-FLASH timer expires, the default treatment applied is the RETURN option.
FEATNAME (continued)	TDEFAULT	0 to 110 in increments of 5. 5=5 sec	T default timer. The amount of time after realert before the default treatment is applied to the calling party.
	THOLD	0 to 12 in increments of 1. 1=10 sec	THOLD timer. The length of time between REMINDER announcements, when a call is on hold, because the subscriber keyed the HOLD option.
	FNALANN	character	Final announcement. The location name of a treatment in table CLLI to be applied to subscribers who do not subscribe to the DSCWID option.
Note: If CFDA is not available and active and the default treatment assigned is FWD, the RING default is applied to the caller. A warning message stating the reason is displayed at the CC .			

Datafill example for table RESOFC

The following example shows sample datafill for table RESOFC. RESOFC table control will allow manual changes. SERVORD is recommended for applying CLASS features.

Custom Local Area Signaling Services (continued)

MAP display example for table RESOFC

```
TABLE RESOFC:
DSCWID Y SUBSCR DSCWID COMPLETE RING NONE NIL N NIL N NIL
NO NIL 15 15 6 $
>CHANGE

ENABLED: Y
>
ACCESS: SUBSCR
>
FEATNAME: DSCWID
>
DTYPE: COMPLETE
>
DEFTRMT: RING
>
AMA: NONE
>
BUSYANNC: NIL
>
BUSYSUPV: N
>
DFKTANNC: NIL
>
DFLTSUPV: N
>
HOLDANNC: NIL
>
HOLDSUPV: NO
>
REMINDER: NIL
>
TFLASH: 15
>
TDEFAULT: 15
>
THOLD: 6
>
FNALANN:
>$
TUPLE TO BE CHANGED:
DSCWID Y SUBSCR DSCWID COMPLETE RING NONE NIL N NIL N
NIL NO NIL 15 15 6 $
ENTER Y TO CONFIRM, N TO REJECT OR E TO EDIT
```

Custom Local Area Signaling Services (continued)

Datafilling table RESFEAT

The following table shows the datafill specific to Custom Local Area Signaling Services (CLASS) for table RESFEAT. Only those fields that apply directly to Custom Local Area Signaling Services are shown. For a description of the other fields, refer to the data schema section of the *Translation Guide*.

Note 1: A tuple cannot be added to table RESFEAT until the line where it is being assigned has been datafilled in table IBNLINES.

Note 2: Datafill for DSCWID options, previously in table IBNLINES, is moved to the RESFEAT table.

SERVORD is the recommended way to assign DSCWID to a subscriber's line. However, RESFEAT table control does allow DSCWID to be added to a subscriber line.

Datafilling table RESFEAT (Sheet 1 of 2)

Field	Subfield or refinement	Entry	Explanation and action
LINE		number	Line equipment number. External LEN number assigned to a line. This is the first part of the key field for table RESFEAT.
KEY		0 to 69	Business set key number. Second part of key field of table RESFEAT. Number designating the key a feature is to be assigned. Must always be set to 0 for DSCWID features.
FEAT		DSCWID	CLASS feature name. Third part of key field of table RESFEAT. Feature to be assigned. Examples: DSCWID, CND, CNDB, ADSI, CID
VAR		see subfields	Feature variable area. Modified variable area, defined for each feature. See the following subfields.
	DF	DSCWID	CLASS feature name. Subfields to be used if this is CLASS feature DSCWID: AMA, STATUS, DTYPE, DEFTRMT, DAMA, CONFPEGS.
	AMA	NOAMA, AMA	CLASS AMA status. AMA status is not used for DSCWID. Options: NOAMA and AMA.
	STATUS	ACT	CLASS activity status. Possible options are ACT, INACT, UNIVI, UNIVA. For DSCWID use ACT.

Custom Local Area Signaling Services (continued)

Datafilling table RESFEAT (Sheet 2 of 2)

Field	Subfield or refinement	Entry	Explanation and action
	DF	see list	CLASS feature name. Options: ADSI, SCRJ, SCF, SCA, DSCWID, DRCW, DDN, CND, or CNAMD
	DTYPE	see list	DSCWID type. Key of NAME field in table DSCWDTYP, plus the value of DEF in field DTYPE of table RESOFC. Options: PROPRITY, ADSITIME, ADSICID, NODATA, NOCIDCW, COMPLETE, and DEF. ***Note:*** The PROPRITY value is included for compatibility of existing proprietary CPEs. This value is blocked when adding or changing options on a line.
	DEFTRMT	see list	Default treatment. When no DSCWID option is chosen by subscriber. Options: RING, FWD, ANNC, or DEF.
DAMA		see list	AMA recording status type. Options: NONE, record on conference call CONF, or DEF.
CONFPEGS		0 to 32767	AMA conference pegs. The number of successful DSCWID conference attempts made if the datafill in field DAMA is CONF.

For a more complete description of CLASS features, refer to the *Translations Guide*.

Translation verification tools

Custom Local Area Signaling Services do not use translation verification tools.

SERVORD

SERVORD examples for adding DSCWID options to a subscriber line

The following SERVORD examples show how DSCWID feature is applied to the RSC-S using the ADO command. Assume that in table RESOFC the:

- default DSCWID type (DTYPE) is set to ADSITIME.
- DSCWID conference (AMA) status is set to NONE.
- DSCWID default treatment (DEFTRMT) treatment is set to FWD.

Custom Local Area Signaling Services (continued)

MAP display of SERVORD Add Option (ADO) command using defaults

```
SERVORD
SO:
>ADO
SONUMBER: NOW YY MM DD
>$
DN_OR_LEN
>6215000
OPTION:
>DSCWID
SUBOPT:
>$
OPTION:
>$
COMMAND AS ENTERED:
ADO NOW YY MM DD 6215000 (DSCWID $) $
ENTER Y TO CONFORM, N TO REJECT, OR E TO EDIT
Y
```

The previous example will assign DSCWID to 621-5000 with the default characteristics of DSCWID type ADSITIME.

Custom Local Area Signaling Services (end)

MAP display of SERVORD Add Option (ADO) command with overrides

```
SERVORD
SO:
>ADO
SONUMBER: NOW YY MM DD
>$
DN_OR_LEN
>6215000
OPTION:
>DSCWID
SUBOPT:
>DTYPE
DTYPE:
>ADSICID
SUBOPT:
>DAMA
DAMA:
>CONF
SUBOPT:
>DEFTRMT
DEFTRMT:
>ANNC
SUBOPT:
>$
OPTION:
>$
COMMAND AS ENTERED:
ADO NOW YY MM DD 6215000 (DSCWID (DTYPE ADSICID)
(DAMA NONE) (DEFTRMT ANNC)$)$
ENTER Y TO CONFORM, N TO REJECT, OR E TO EDIT
Y
```

Example assigns DSCWID to 621-5000 with the characteristics of DSCWID type ADSICID. The AMA recording status is CONF and the default treatment is ANNC.

For more information about service orders, refer to the *Subscriber Services Translations Guide.*

Special Services

Functional group

Functional group: BAS00016

Feature package

Feature package: NTX621AB SMU Special Services

Release applicability

XPM05 and later versions

Requirements

Special Services has the following requirements:

- SMU—Subscriber Module Urban, NTX387AC or
- SMU—Subscriber Module Urban upgrade, NTX387AD

Description

The SMU Special Services package provides special services for the SMU. This package supports special service cards in the remote carrier urban RCU. This Special Services package provides nailed-up cross-connections to be set up and maintained through software.

Operation

Before BCS30, the two-wire FXB station or office lines, or the special services module (SSM) provided special services. The following paragraphs provide an summary of the foreign exchange (FX).

Foreign exchange with battery (FXB)

The FX service allows a subscriber from one serving area to place calls to a subscriber in a different serving area. The other serving area is called a foreign exchange. The FX service allows the subscriber that makes the call appear as a local subscriber to the called party. These calls are called tie lines.

The two types of two-wire FXB line cards are:

- 3A13AB, 3A13AC—FX with battery office end FXBO. The FXBO card connects to another switch.
- 3A12AB—FX with battery station end FXBS. This is a line card that connects to a subscriber.

The following figure shows an example of a special-service connection that supports foreign exchange. This special service connection is also called a hairpin connection.

Foreign exchange hairpin cross-connection

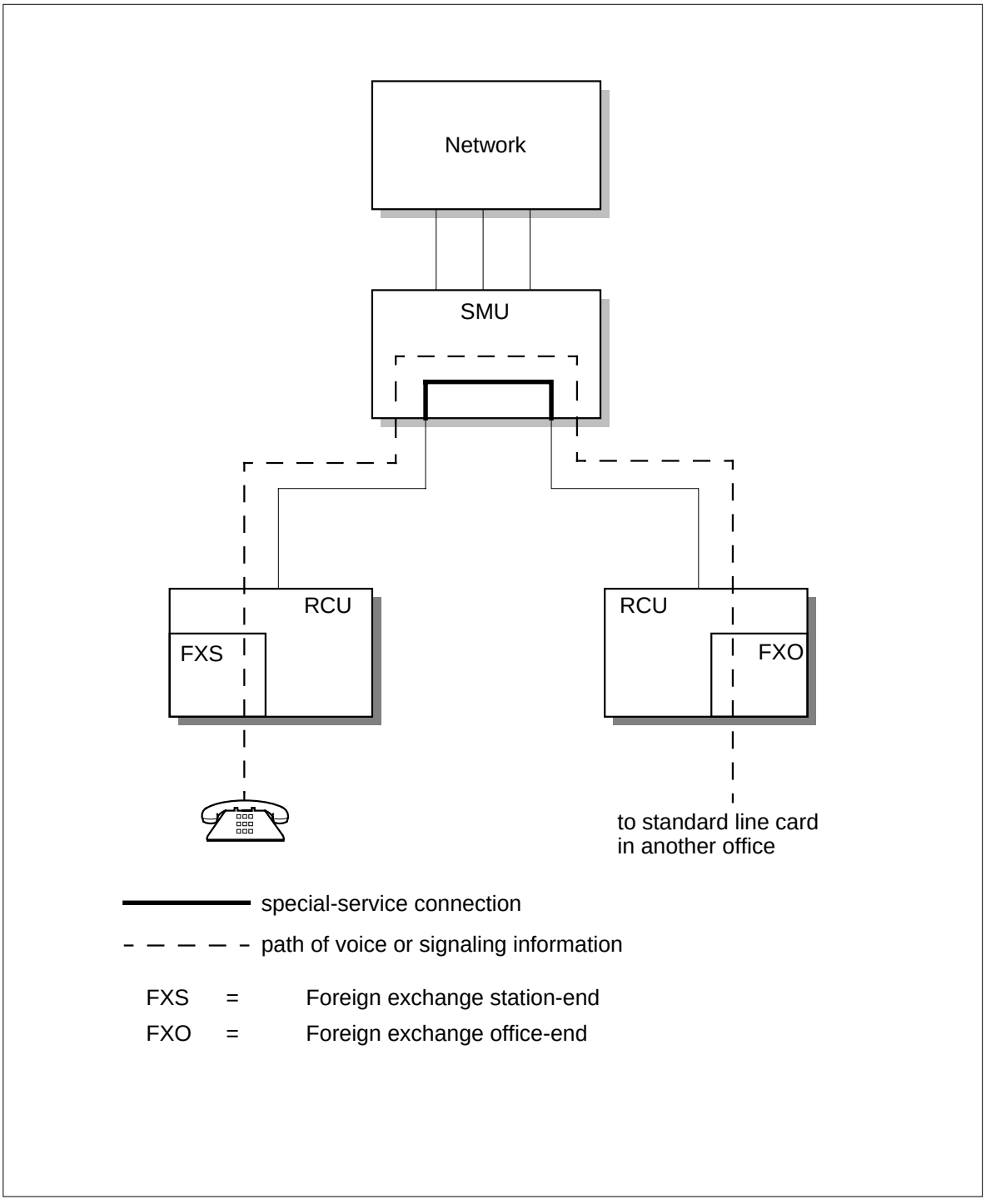

Special Services (continued)

Configuration of special services

Before BCS30, the two-wire FXB station or office lines and the SSM provided special services. This feature now provides the following special service line cards and line card carriers:

- Special service line cards (four-wire)
  - NT7A20AA—FXB voice frequency
  - NT7A21AA—duplex voice frequency
  - NT7A22AA—signaling module SM
  - NT7A23AA—office channel unit data port OCUDP
- Special service line cards (two-wire)
  - NT7A25AA—source type
  - NT7A26AA—sink type
  - NT7A27AA—ground start/sink type
- Special service line card carrier (SSLCC)
  - NT3A11BA—2-wire/4-wire SSLCC
  - NT3A11AB—FXB LCC
  - NT3A11CA—ISLCC

These special service line cards and the special service line card carrier, allows the operating company to provide special services *without using an SSM*. These new cards allow the operating company to provide more line cards in less space.

The following is a list of the special service cards and the types of services that are offered when the operating company provisions these cards:

- NT7A20AA
  - FX—office (central office [CO] trunk, wide area telephone service [WATS] line)
  - FX—station
  - equalized transmission only (ETO) [private line]
  - transmission only (TO)
- NT7A21AA
  - duplex (tie trunk)
  - ETO (private line data)
  - TO (private line data)

- NT7A22AA
  - — This card works with the NT7A20AA or the NT7A21AA. These groups offer the following features:
  - — with the NT7A20AA
    - – E&M type I or type II signaling (tie trunk)
    - – PLR type I or type II signaling
    - – tandem six-wire or eight-wire signaling
  - — with the NT7A21AA
    - – E&M type I or type II signaling
    - – PLR type I or type II signaling
    - – tandem six-wire or eight-wire signaling

  Note: The NT7A20 or NT7A21 must be in position 1 or position 3 of the special services line card carrier LCC. Position 1 is the top position. The NT7A20 or NT7A21 can also be in both positions. The other NT7A22 is in position 2 or 4, or both, of the carrier. Note that when the 7A22 is with the 7A20 or 7A21 card, the group has only one provisioned line. When the 7A20, 7A21, or 7A23 cards are alone, each card has one provisioned line.

- NT7A23AA
  - — OCUDP digital data
- NT7A25AA
  - — FXS loop start
  - — FXS ground start
  - — dial pulse originating DPO
  - — transmission only TO

  Note: The NT7A25AA supports the following special service applications: teletypewriter exchange (TWX), inward wide area telephone service (INWATS), outward wide area telephone service (OUTWATS), and private branch exchange (PBX).

- NT7A26AA
  - — FXO loop start
  - — FXO ground start

Special Services (continued)

— dial pulse terminating (DPT) [for direct inward dialing (DID) applications]

— TO

- NT7A27AA
  - — FXO loop start
  - — FXO ground start
  - — DPT
  - — TO

Note: The NT3A11AB FXB line card carrier can have only the NT3A12 and NT3A13 two-wire FXB line cards. The SSLCC NT3A11BA can have both the new two- and four-wire special service line cards and the current two-wire FXB line cards.

The NT3A11CA integrated services line card carrier (ISLCC) supports ISDN and MBS line cards. The ISLCC also supports all two- and four-wire special-service line cards in slot positions 1, 2, and 3 of the carrier.

Slot position 4 can have the four-wire signaling module NT7A22AA and the enhanced two-wire special service cards. The enhanced two-wire special service cards are NT7A25, NT7A26, and NT7A27.

The SSM configuration

Two SSM shelves configured in an SMU-RCU subsystem appear in the following figure.

SSM configuration in the SMU-RCU subsystem

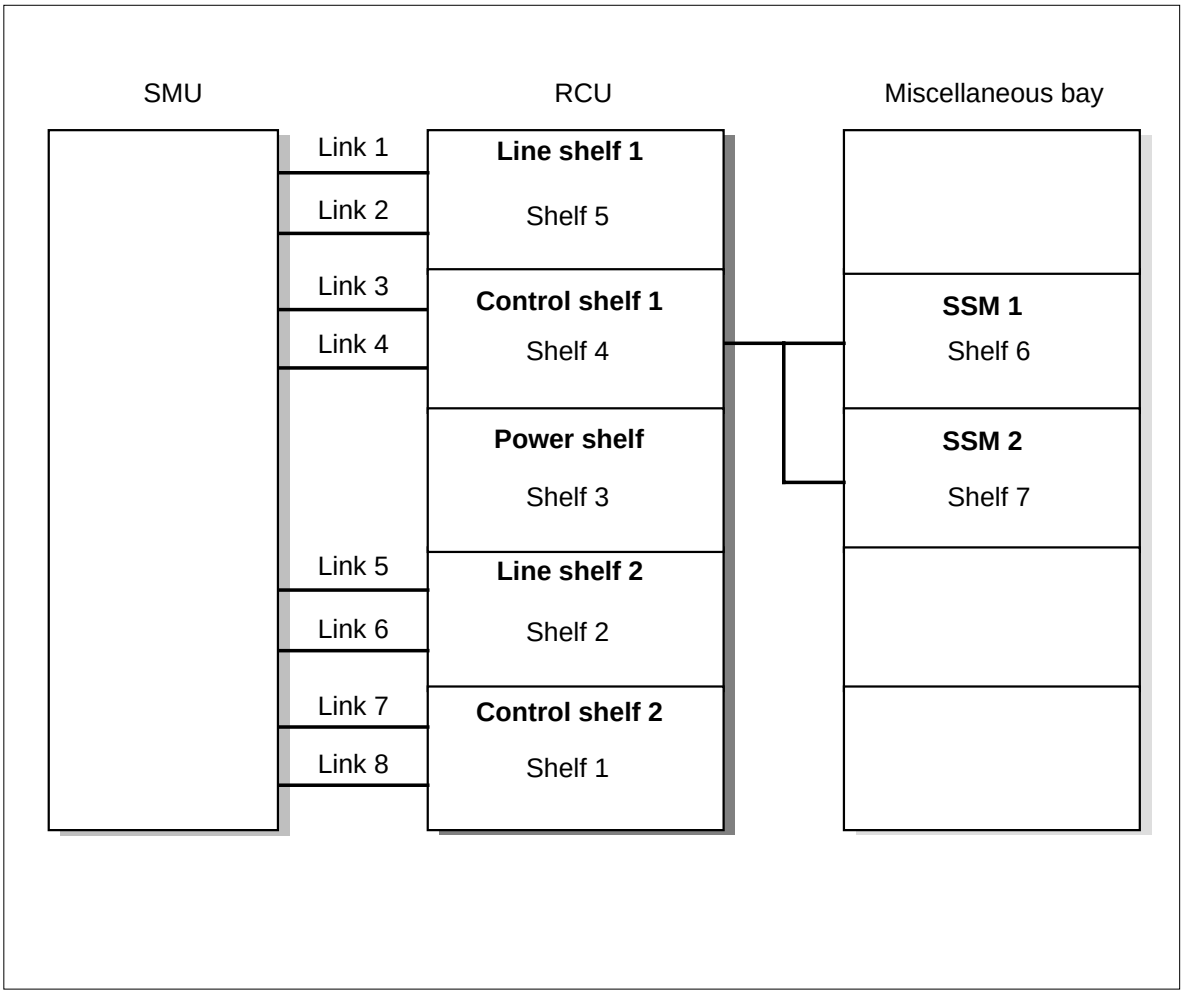

An RCU can support a maximum of two SSMs. The SSM shelves can be in a separate bay from the RCU or in the RCU. In the RCU, each SSM shelf replaces a line shelf. The SSM shelves can also be in both the RCU and a miscellaneous bay. When this event occurs, one SSM appears on a miscellaneous bay and one on the RCU.

Each SSM shelf connects to the RCU through a cable. The cable that connects in to the backplanes of the SSM shelf and control shelf 1. The cable carries digital voice frequency and signaling data. The cable runs from the interface card of the SSM to the bus extender card on the RCU.

The bus extender cards are in the first or second line card carrier slots of control shelf 1. An SSM shelf connected to a bus extender in the first slot is called

Special Services (continued)

SSM 1. An SSM connected to a bus extender in the second slot is called SSM 2.

The Special Services Module 1 (SSM 1) is always on shelf 6 and SSM 2 is always on shelf 7. An SSM shelf appears in the following figure.

SSM shelf

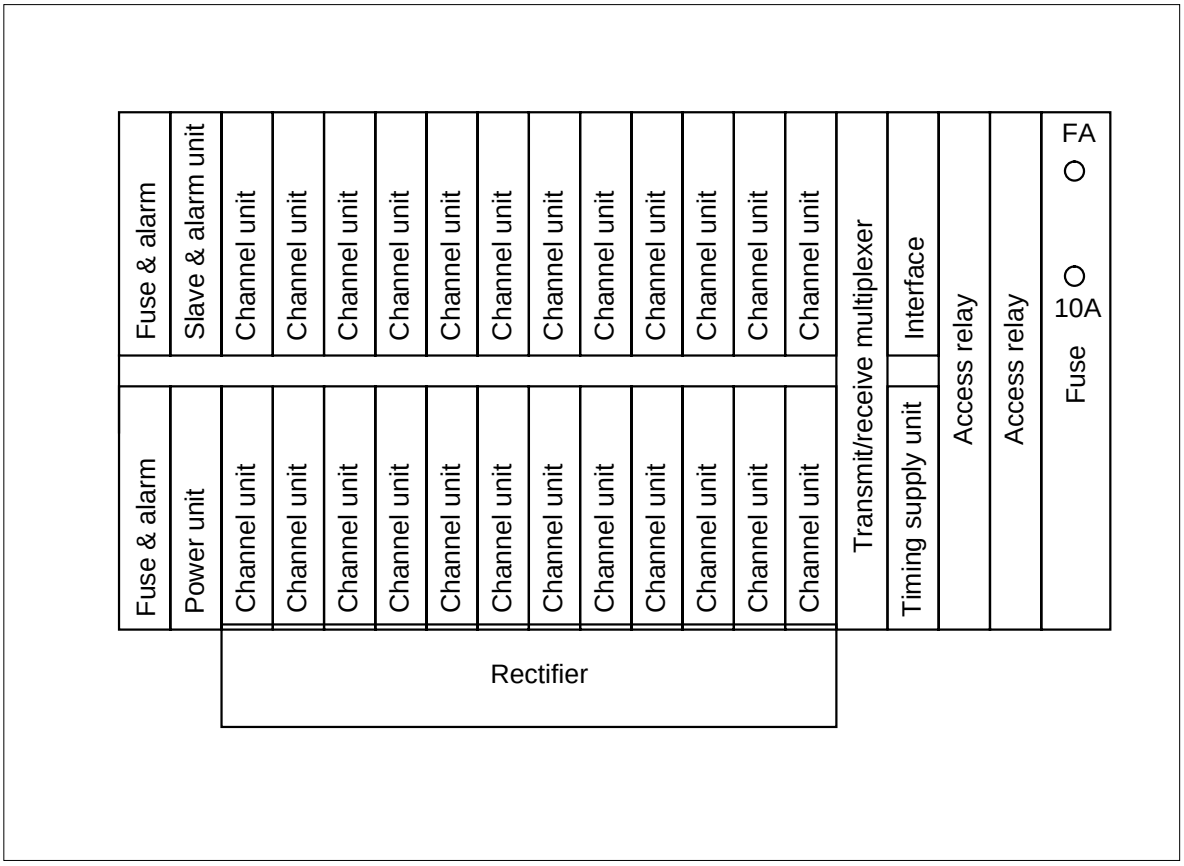

Common equipment cards and a maximum of 24 Northern Telecom DE-3/DE-4 channel units fit into an SSM shelf.

For information on the common equipment cards that appear in the figure, refer to the special services section of this document.

For information on the channel units, refer to the special services section of this document. The appendix contains references to documents that describe most of the channel units.

Each SSM channel unit requires a dedicated channel on one of the DS-1 links that connect the SMU and RCU. Each channel unit is part of a dedicated special-service hairpin connection through the SMU.

The SSM channel unit numbering appears in the following figure.

SSM channel unit numbering

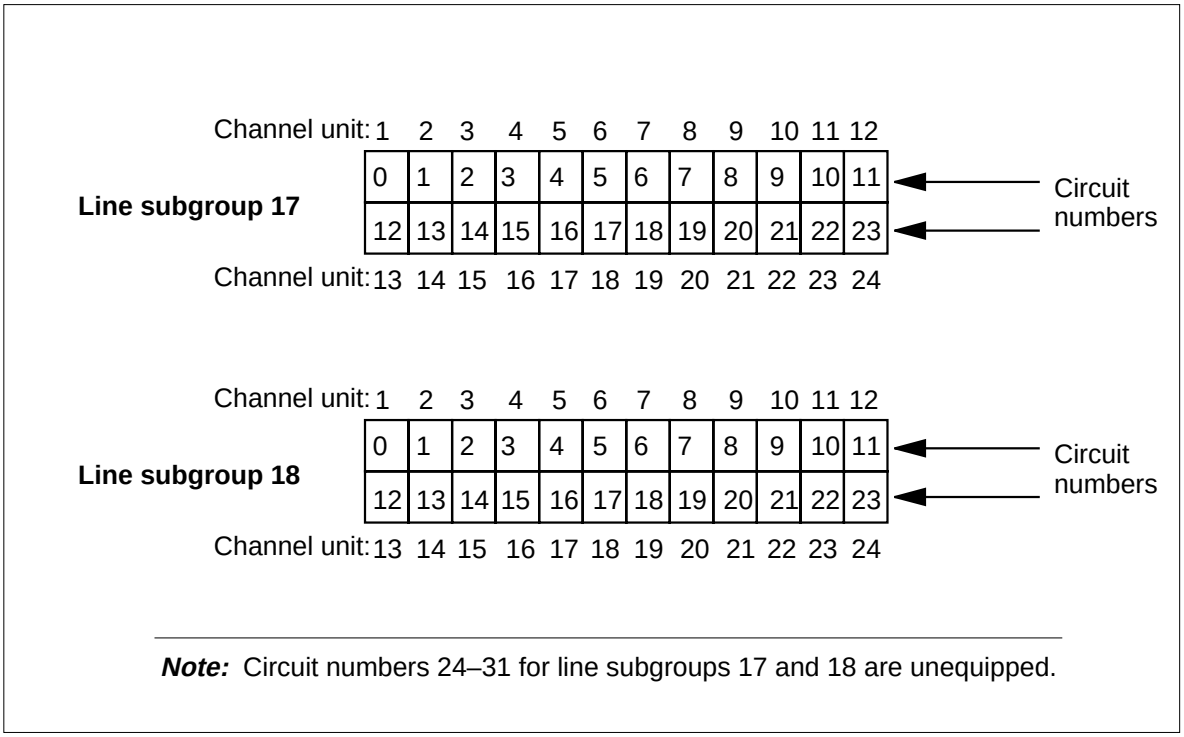

Note: Circuit numbers 24–31 for line subgroups 17 and 18 are unequipped.

The line subgroup and circuit numbers are important because they are used as part of the line equipment number (LEN). The LEN is a software identification for lines in the DMS-100 system. The DMS-100 system uses LENs completely. The DMS-100 use of LENs includes application in data tables, log reports, and MAP displays.

The DE-4 Datapath extension hairpin configuration

An SSM that contains a Datapath extension channel units supports Special-service hairpin connections. For information on Datapath extension service, refer to *DPX Channel Unit Descriptions*. The data rate for Datapath extension on the SSM cannot exceed 19.2 kbit/s.

The data transmission path goes from the data unit at the premises of the customer to the Datapath extension unit in the SSM. The RCU passes the data

Special Services (continued)

from the SSM to the SMU over a DS-1 link. The path for data transmission appears in the following figure.

A hairpin connection in the SMU to a digital trunk controller DTC completes the circuit path. The DTC provides the connection to the DMS-100 network.

Datapath extension configuration

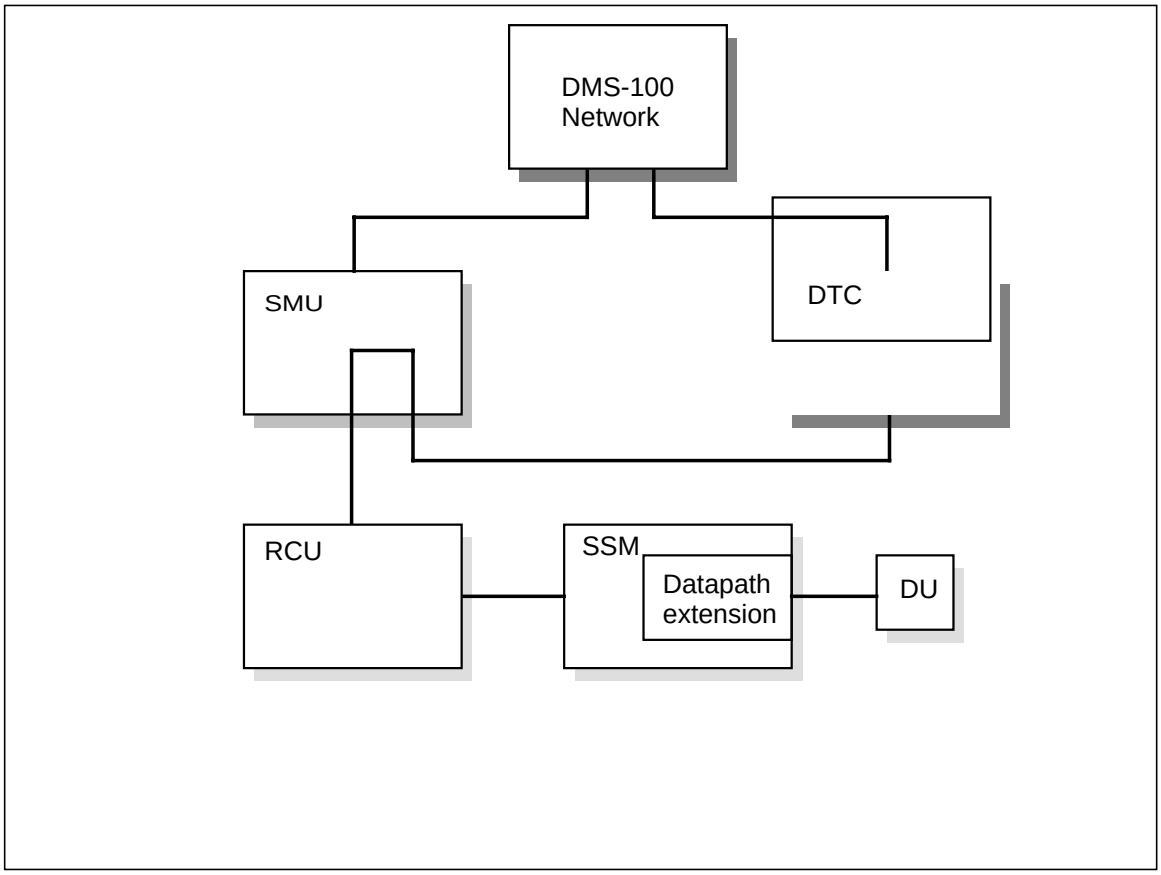

Datapath extension channel units have the card code QPP628. The use of Datapath extension channel units in special-service connections requires the entry of this card code in to table LNINV.

Translations table flow

This package does not alter standard translations data flow.

Limits

Configuration limits for FXB cards

The following limits apply to special-service connections that use FXB cards:

- Both endpoints must be off the same SMU.
- POTS, FSR, MPDR, and coin lines cannot be endpoints of special-service connections.
- Control processor switchover prevents messaging between the SMU and RCU for a limited time. The SMU cannot establish or reassign special-service connections. Control processor switchover is the process of switching from the active to the backup control processor in the RCU. These limits also apply when a DS-1 link or a message processor card fails and prevents messaging.
- The FXBS lines with assigned directory numbers cannot be endpoints of special-service connections.
- The FXBS to FXBS and FXBO to FXBO connections are not allowed.
- The execution of service order operations cannot occur on RCU lines that are endpoints of special-service connections. The execution of service orders cannot occur on FXBO lines. The FXBO lines cannot access service orders because station equipment is not present at the end of the loop.
- A DS-1 channel on the link can be an endpoint of a special-service connection. In this event, a DS-1 link cannot join an RCU and an SMU in table RCUINV. The special-service connection must be deleted before the link can join the RCU and SMU.
- The LENs for FXB line cards must have odd-numbered circuit assignments.

Configuration restrictions for two- and four-wire cards

Two-wire FXB limits apply to two- and four-wire FXO/FXS configurations with one exception. The LENs for the new two-wire line cards 7A25, 7A26, and 7A27 are *not* restricted to even-numbered circuits. This restriction does not apply to these LENs because each line card provides two circuits.

This restriction applies to current two-wire FXB cards and to four-wire cards. The restriction excludes the 7A22AA signaling module, which must be assigned to an odd-numbered circuit.

The general guidelines to configure the special service cards are the same as the guidelines for other nailed-up connections.

Special Services (continued)

For example, voice-type circuits can only connect to other voice-type circuits, and data-type to data-type. The FCN field in table LNINV also limits voice-type to voice-type connections. Table SPECCONN enforces this limit.

These compatibilities appear in the following table.

Special service configuration restrictions

	FXS	FXO	TO	ETO	DPO	DPT	DX	PLR	EM	TANDEM 2-state	TANDEM 3-state	OCUDP
FXS	-	X	-	-	-	-	-	-	-	-	X	-
FXO	X	-	-	-	-	-	-	-	-	-	X	-
TO	-	-	X	X	-	-	-	-	-	-	-	-
ETO	-	-	X	X	-	-	-	-	-	-	-	-
DPO	-	-	-	-	-	X	X	X	X	X	-	-
DPT	-	-	-	-	X	-	X	X	X	X	-	-
DX	-	-	-	-	X	X	X	X	X	X	-	-
PLR	-	-	-	-	X	X	X	X	X	X	-	-
EM	-	-	-	-	X	X	X	X	X	X	-	-
TANDEM2-state	-	-	-	-	X	X	X	X	X	X	-	-
TANDEM3-state	X	X	-	-	-	-	-	-	-	-	X	-
OCUDP	-	-	-	-	-	-	-	-	-	-	-	X

Note: X indicates a valid configuration; - indicates an invalid configuration.

Configuration limits for SSM channel units

The following limits apply to SSM channel units in special-service connections:

- For restrictions on how to connect different types of channel units, refer to *Circuit Pack Descriptions, Channel Unit Descriptions,* and *Data Channel Units and TSU Descriptions*.
- The execution of service orders cannot occur on SSM channel units.
- The SGM does not support the RCULEN.
- The configuration of an SSM cannot occur on an RCU if the SMU to which the RCU connects has an EISP card.
- The configuration of SSM 1 can occur on an RCU. In this condition, the first eight lines on control shelf 1 cannot be entered. This condition occurs because a bus extender card occupies slot 1.
- The configuration of SSM 2 can occur on an RCU. In this condition, the eight lines on control shelf 1 for slot 2 cannot be entered. This condition occurs because a bus extender card occupies slot 2.
- Bus extender cards cannot be provisioned in slots 1 or 2 of control shelf 1. This action occurs if lines are entered for slots 1 or 2 of this shelf.
- Channel unit types in table SPECCONN must agree. A voice channel unit must associate with a voice channel unit. A data channel unit must associate with a data channel unit.

Interactions

Special Services does not have any functionality interactions.

Activation/deactivation by the end user

Special Services does not require any activation or deactivation by the end user.

Billing

Special Services does not affect billing.

Station Message Detail Recording

Special Services does not affect Station Message Detail Recording.

Datafilling office parameters

Special Services does not affect office parameters.

Special Services (continued)

Datafill sequence

A list the tables that require datafill to implement Special Services appears in the following table. The tables appear in the correct entry order.

Datafill tables required for Special Services

Table	Purpose of table
CARRMTC	Carrier Maintenance Control Table. Allows the DMS-100 switch administration to enter maintenance control information in peripherals, out-of-service limits for alarms, and system return-to-service occurrences.
LTCPSINV	Line Trunk Controller P-Side Link Inventory Table. Identifies the SMU module type and number and the port indication of the P-side links.
RCUINV	Remote Carrier Urban Inventory Table. Identifies the location of the RCU, C-side links, SMU to which the links connect, and related information. For special services, this table identifies the SSM (if equipped). This table provides special-service calls with priority over plain old telephone service (POTS) calls during channel reassignment (if enabled).
LNINV	Line Circuit Inventory Table. Retains an inventory of subscriber lines and associated line cards that include special-service cards, for RCU modules.
LNINVEXT	Line Inventory Extension Table. Identifies the 2- and 4-wire special-service line cards when equipped in a 4-wire special-service line card carrier.
SPECCONN	P-Side to P-Side Special Connection Table. Identifies the end points of special-service hairpin connections.

Datafilling table CARRMTC

The datafill for Special Services for table CARRMTC appears in the following table. Only those fields that apply directly to Special Services appear.

For a description of the other fields, refer to the data schema section of the *Translation Guide*.

Yellow alarms

The system generates a yellow alarm. The system generates this alarm when the second least significant bit of all channels of the associated DS-1 link is forced to zero. In the DEFAULT tuple for the SMU, the IAT field value is N. The entry N in the IAT field means *do not* inhibit alarm transmission. Allow the system to process the alarms.

Yellow alarms are important for two-wire or four-wire nonswitched hairpin connections because these connections use a channel bank. A processed yellow alarm makes sure that a SWACT of the SMU does not cause the loss of

dedicated data service. A loss of dedicated data service requires that the link is busied and returned to service at the CARRIER level.

The DEFAULT tuple allows the system to process yellow alarms. Use this tuple for SMU links that connect to a channel bank.

Datafilling table CARRMTC

Field	Subfield or refinement	Entry	Explanation and action
TMPLTNM		DEFAULT	Template name. Enter DEFAULT. This entry also appears in the CARRIDX field of table LTCPSINV.
IAT		N	Inhibit alarm transmit. Enter N for the IAT field to allow the processing of yellow alarms.

Datafill example for table CARRMTC

Sample datafill for table CARRMTC appears in the following example.

MAP example for table CARRMTC

```
CSPMTYPE     TMPLTNM RTSML RTSOL
                                                    ATTR
-------------------------------------------------------
SMU          DEFAULT   255   255
                                                DS1 NT6X85AB
MU_LAW SF ZCS BPV NILDL N 250 1000 220 50 50 1000 3
6 864 100 17 511 4  255
```

Datafilling table LTCPSINV

The datafill for Special Services for table LTCPSINV appears in the following table. Only the fields that apply directly to Special Services appear.

Special Services (continued)

For a description of the other fields, refer to the data schema section of the *Translation Guide*.

Datafilling table LTCPSINV

Field	Subfield or refinement	Entry	Explanation and action
PSLNKTAB		see subfields	This field contains subfields PSLINK, PSDATA, CARRIDX, ACTION, and CONTMARK. Vector from 0-19. ***Note:*** Make changes to fields with multiple entries in the PROMPT mode only.
	PSLINK	0-19	Enter the P-side port number.
	PSDATA	DS1	Enter DS1 for DS-1 type interface card.
	CARRIDX	DEFAULT	The default value is DEFAULT. Enter the same value for the template name in table CARRMTC.
Note: Do not delete a DS-1 link from table LTCPSINV if a channel on the link is part of a special-service hairpin connection. You must delete the connection before you delete the link.			

Datafill example for table LTCPSINV

Sample datafill for table LTCPSINV appears in the following example.

MAP example for table LTCPSINV

```
XPMTYPE XPMNO                                                PSLNKTAB
------------------------------------------------------------
   SMU    0
   (0 DS1 DEFAULT N) (1 DS1 DEFAULT N) (2 DS1 DEFAULT N)
   (3 DS1 DEFAULT N) (4 DS1 DEFAULT N) (5 DS1 DEFAULT N)
   (6 DS1 DEFAULT N) (7 DS1 NO_YELLOW_ALM N) (8 NILTYPE N)
   (9 DS1 NILTYPE N) (10 NILTYPE) (11 NILTYPE)
   (12 NILTYPE) (13 NILTYPE) (14 NILTYPE) (14 NILTYPE)
   (15 NILTYPE) (16 NILTYPE) (17 NILTYPE) (18 NILTYPE)
   (19 NILTYPE)  $
```

Datafilling table RCUINV

The datafill for table RCUINV appears in the following procedure. This procedure contains only those fields that apply to SMU special services.

For a description of the other fields, refer to the data schema section of the *Translation Guide*.

Table RCUINV has two fields that must contain datafill when special services are provided by provisioning one or more SSMs. These fields, named SSM1 and SSM2, accommodate provisioning of bus extender cards in the RCU for special service modules 1 and 2.

Fields SSM1 and SSM2 can have an entry of Y for yes, for a provisioned bus extender. Fields SSM1 SSM2 can have an entry of N for No if the bus extender card is not provisioned. The default value for the SSM1 and SSM2 fields is N.

The system option field, SYSTMOPT, can contain the O selector. In this event, the system prompts the user to enter a value in each of the system option fields. One of the system options is for special-services priority, SSPRI.

When this field has the entry Y for yes, special-service calls replace POTS calls during channel reassignment. This replacement occurs when all DS-1 channels on DS-1 links that operate correctly are occupied.

Datafilling table RCUINV (Sheet 1 of 2)

Field	Subfield or refinement	Entry	Explanation and action
SSM1		Y or N	Enter Y if SSM 1 is provisioned. This SSM occupies shelf 6 and has a corresponding bus extender equipped on control shelf 1 in slot 1.
SSM2		Y or N	Enter Y if SSM 2 is provisioned. This SSM occupies shelf 7 and has a corresponding bus extender equipped on control shelf 1 in slot 2.
SYSTMOPT		see subfield	Enter system options under subfield SYSOPT.
Note: When you enter data in field C-side link table (CSLNKTAB), make sure that message links do not have the same physical interface card assignment. When the interface card supports two or more links, separate the message links by the number of links on the interface cards. This procedure applies to all interface link types which include DS-1, DS30, DS30A, or PCM-30. Table control issues a warning if an attempt to assign message links on the same interface card occurs. The assignment of message links to the same interface card can cause an E1 outage if the card fails. An E1 outage occurs when all message links fail.			

Special Services (continued)

Datafilling table RCUINV (Sheet 2 of 2)

Field	Subfield or refinement	Entry	Explanation and action
SYSTMOPT (continued)	SYSOPT		Enter O to obtain prompts for each system option where you can enter desired values.
SSPRI		Y or N	Enter Y to enable special-service priority. This allows special-service calls to replace POTS calls during channel reassignment. This action occurs when all DS-1 channels on DS-1 links, that operate correctly are occupied. Enter N to disable special-service priority. The default is N.
Note: When you enter data in field C-side link table (CSLNKTAB), make sure that message links do not have the same physical interface card assignment. When the interface card supports two or more links, separate the message links by the number of links on the interface cards. This procedure applies to all interface link types which include DS-1, DS30, DS30A, or PCM-30. Table control issues a warning if an attempt to assign message links on the same interface card occurs. The assignment of message links to the same interface card can cause an E1 outage if the card fails. An E1 outage occurs when all message links fail.			

Datafill example for table RCUINV

Sample datafill for table RCUINV in which bus extender cards are provisioned to accommodate two SSMs appears in the following example.

MAP example for table RCUINV

```
RCUNO FRTYPE FRNO SHPOS FLOOR ROW FRPOS  CSPMNO
                                         CSLNKTAB
                                          RNGDATA
  LTA  RLTP RTAC LINESHF1 CTRLSHF2 LINESHF2 SSM1 SSM2
                                    SYSTMOPT DRTUTEST
-----------------------------------------------------
REM1 00 0 RUB     1    18     1   C    8    SMU 0
  (3 1) (4 3) (1 5) (2 7) (5 0) (6 2) (7 4) (8 6) $
                                    F 17 25 50 67
    Y     N   N       Y        Y        Y    Y    Y
              0  N  N  N  Y  Y RCU0 0 0  RCU0 0 0 0 16
```

Datafilling table LNINV

The datafill for table LNINV appears in the following procedure. This procedure contains only those fields that apply to SMU special services.

For a description of the other fields, refer to the data schema section of the *Translation Guide*.

Datafilling table LNINV (Sheet 1 of 3)

Field	Subfield or refinement	Entry	Explanation and action
LEN		see subfields	This field contains the following subfields: SITE, FRAME, UNIT, LSG, and CIRCUIT. Example: **>REM1 00 0 00 00**
	SITE	alphanumeric	Enter the location of the RCU (alphanumeric). This entry is not optional and does not have default value.
	FRAME	0-99	Enter the remote concentrator module frame number, which is not a physical frame. This frame is a software entity that identifies the RCU modules that shares the same metallic test pair. The RCU modules that share the same metallic test pair have the same frame number.
	UNIT	0-9	Enter the remote concentrator module unit number.
	LSG	0-16	Enter the line subgroup of the RCU of the line.
	CIRCUIT	0-31	Enter the line card circuit number of the line subgroup where the card is assigned. ***Note:*** Special-service cards must have even-numbered circuit assignments.

Special Services (continued)

Datafilling table LNINV (Sheet 2 of 3)

Field	Subfield or refinement	Entry	Explanation and action
CARDCODE		alphanumeric	Enter the product engineering code of the line card. The range of values includes the following: • 3A12AB • 3A13AB • 3A13AC • 7A20AA • 7A21AA • 7A22AA • 7A23AA • 7A25AA • 7A26AA • 7A27AA • SSM4WD • SSM4WV • SSM2WV
CARDINFO		see subfields	The NIL value is the default. The range is NIL, RCUPOTS, RCUEPOTS, ISLCC, and SSLCC. ***Note:*** When you enter the SSLCC value, the system automatically creates a tuple in table LNINVEXT.

Datafilling table LNINV (Sheet 3 of 3)

Field	Subfield or refinement	Entry	Explanation and action
	FCN	see explanation	This field appears only if CARDINFO has the entry ISLCC or SSLCC. The value entered defines the function of the two-wire and four-wire special service card in the four-wire line card carrier. The range of values includes FXO, FXS, ETO, TO, EM, PLR, TANDEM, DX, OCU, SM, DPO, and DPT. ***Note:*** The value entered in this field determines the default values in table LNINVEXT.
	INSVC	Y or N	This field appears only if the CARDINFO has the entry SSLCC. Enter Y to enable alarms against a line card. If the line card fails diagnostics, the RCU raises alarms against the line card. Enter N to disable the alarms. The RCU does not raise alarms even if the line card fails diagnostics.

Special-service circuit number limits

Special-services line card carriers hold four line cards. Each line card supports one or two subscriber lines. The line card type determines the number of subscriber lines. The 7A25, 7A26, and 7A27 line cards can support two lines for each card.

All special-service lines require even-numbered logical circuits associated with each slot. This limit does not apply to special-service lines that 7A25, 7A26, and 7A27 cards support

For example, a four-wire special-service card can occupy the third slot of a subgroup. In this event, the circuit assignments can only be circuits 16, 18, 20, and 22. An attempt to assign circuit numbers 17, 19, 21, or 23 causes an error message.

Note 1: The two-wire special service cards 7A25, 7A26, and 7A27 support two lines for each card. These cards can have circuit assignments of *any* circuit number in the accepted range.

Note 2: The 7A22AA signaling module is grouped with either the 7A20AA or 7A21AA. This module *must* have an odd-numbered circuit assignment.

Special Services (continued)

How line card configurations affect line card datafill

Before BCS30, table LNINV extended the range of card code values that can be entered. In BCS30, this table was both extended and changed to accommodate the new line card and line card carrier configurations. A new field, CARDINFO, was added.

A new table LNINVEXT is created when the new special service lines are entered. This condition is explained in the next section.

Datafilling table for special service cards in an SSLCC

LNINV datafill: CARDCODE	Service	LNINV datafill: FCN
3A12AB	2-wire FXS	FXS
3A13AB or AC	2-wire FXO	FXO
7A20AA	4-wire FXS	FXS
	4-wire FXO	FXO
7A20AA and 7A21AA	4-wire equalized transmission only	ETO
	4-wire transmission only	TO
	4-wire E&M	EM
	4-wire pulse link repeater	PLR
	4-wire TANDEM	TANDEM
7A21AA	4-wire duplex	DX
7A22AA	4-wire signaling module	SM
7A23AA	4-wire office channel unit data port	OCU
7A25AA	2-wire FXS, loop start or ground start	FXS
7A26AA	2-wire FXO, loop start or ground start	FXO
	2-wire transmission only	TO
	2-wire dial pulse terminating	DPT
7A27AA	2-wire FXO, loop start or ground start	FXO
	2-wire transmission only	TO
	2-wire dial pulse terminating	DPT

The NT3A11BA special service line card carrier (SSLCC) can use two-wire and four-wire special service cards. In this condition, specified card codes are present. These card codes appear in the following table.

Datafill example for table LNINV

Sample datafill for table LNINV appears in the following example.

MAP display example for table LNINV

```
LEN  CARDCODE PADGRP  STATUS  GND BNV MNO CARDINFO
-----------------------------------------------
REM1 01 0 02 16 7A21AA STDLN  WORKING  N  NL N SSLCC DX  Y
REM1 01 0 02 18 7A20AA STDLN  WORKING  N  NL N SSLCC FXS Y
REM1 01 0 02 20 7A23AA STDLN  WORKING  N  NL N SSLCC OCU Y
REM1 01 0 02 22 7A25AA STDLN  WORKING  N  NL N SSLCC DPO Y
REM1 01 0 02 23 7A25AA STDLN  WORKING  N  NL N SSLCC TO  Y
```

Datafilling table LNINVEXT

Enter data in the line inventory extension (LNINVEXT) table when the following special service line cards are entered for an RCU in table LNINV:

- 3A12AB
- 3A13AB
- 3A13AC
- 7A20AA
- 7A21AA
- 7A22AA
- 7A23AA
- 7A23AA
- 7A25AA
- 7A26AA
- 7A27AA

A four-wire special service line card carrier must contain the cards.

When the CARDINFO field contains the entry SSLCC in table LNINV, the system creates a tuple in table LNINVEXT. The subfields FCN and INSVC appear after the entry of SSLCC. The value of FCN determines what data values are in table LNINVEXT.

Special Services (continued)

The minimum number of tuples allowed in this table is zero. The minimum is zero because the table cannot contain datafill unless the FCN field in table LNINV contains a special service card value. The maximum number of tuples is 16363.

Note: You cannot add or delete tuples in table LNLNVEXT. The table editor CHANGE command can change tuple values. The value entered for FCN in table LNINV determines the default values.

Datafilling table LNINVEXT (Sheet 1 of 4)

Field	Subfield or refinement	Entry	Explanation and action
LEN		see subfields	This field contains the following subfields: SITE, FRAME, UNIT, LSG, and CIRCUIT. The value of this field is from table LNINV and is the key for this table.
	SITE	alphanumeric	Enter the location of the RCU (alphanumeric). This entry is not optional and does not have a default value.
LEN (continued)	FRAME	0-99	Enter the remote concentrator module frame number. This frame is not a physical frame. This frame is a software entity that identifies the RCU modules that share the same metallic test pair. The RCU modules that share the same metallic test pair have the same frame number. The range is 0-99.
	UNIT	0-9	Enter the remote concentrator module unit number.
	LSG	0-16	Enter the line subgroup of the RCU of the line.
	CIRCUIT	0-31	Enter the line card circuit number of the line subgroup to which the card belongs. ***Note:*** Two-wire FXB and four-wire special service line cards (except for 7A22AA) have even-numbered circuit assignments. This limit does not apply to the new two-wire line cards (7A25, 7A26, 7A27). The four-wire signaling module, 7A22AA, has an odd-numbered circuit assignment.

Datafilling table LNINVEXT (Sheet 2 of 4)

Field	Subfield or refinement	Entry	Explanation and action
FCN		see table LNNV	This value defines the function of the two-wire and four-wire special service card in the four-wire line card carrier. The value of this field is from table LNINV and determines which of the remaining fields appears. ***Note:*** You cannot change this field.
TRMT		0-319, 0-120	For 4-wire special service line cards (LC), this field is entered from 0.00 to 31.9 dB in increments of tenths of a dB. The range is 0-319. Default is 180. For the new 2-wire special service LCs, the range is 0-120 with a default of 50.
RCV		0-319, 0-100	For 4-wire special service line cards (LC), this field contains data from 0.00 to 31.9 dB in increments of tenths of a dB. The range is 0-319. The default is 90. For the new 2-wire special service LCs, the range is 0-100 with a default of 0.
PREE		Y or N	Enter Y for pre-equalization. The default is N.
SL		0-15	Enter the slope equalization required. The default is 0.
HT		0-15	Enter the degree of height equalization. The default is 0.
BW		0-15	Enter the degree of equalization bandwidth. The default is 0.
IMP		150, 600, 900,or 1200	Enter, in ohms, the degree of impedance. For 4-wire special service LCs, the range is 150, 600, or 1200 with a default of 600. For the new 2-wire special service LCs, the range is 600 or 900 with a default of 600.

Special Services (continued)

Datafilling table LNINVEXT (Sheet 3 of 4)

Field	Subfield or refinement	Entry	Explanation and action
CODEC		DYN or PERM	This field determines the status of CODEC power control for the new 2-wire special service LCs. The range of values is DYN (dynamic) or PERM (permanent). The default value is DYN. ***Note:*** This field does not apply to 7A25, 7A26, and 7A27 cards that operate in the TO mode.
HYBRD		0, 1, 2, or 3	Use this field to indicate the hybrid balance values for 2-wire special service LCs. The range of values is 0, 1, 2, or 3. The default value is 0.
SC		OFF, NOR, REV, and SINK	Enter the type of sealing current. Enter OFF for none, NOR for source normal, REV for source reverse, and SINK for sink. The default is OFF.
LOADTYP		L or N	Enter the cable load type (N for nonloaded, L for loaded). The default is N.
SIG		signal type	Enter the type of signaling. Enter the following types of signaling: • EM1 (E&M type I) • EM2 (E&M type II) • PLR1 (PLR type I) • PLR2 (PLR type II) • T6O (six-wire 3-state tandem office) • T8O (eight-wire 3-state tandem office) • T6S (six-wire 3-state tandem station) • T8S (eight-wire 3-state tandem station) • T62 (six-wire 2-state tandem) • T82 (eight-wire 2-state tandem) The defaults are EM1, PLR1, or T60.
RBAL		DX resistance	Enter the DX resistance, in ohms. The default is 0. The range is 0, 162, 364, 486, 649, 811, 973, 1135, 1300, 1462, 1624, 1949, 2111, 2273, or 2435.

Datafilling table LNINVEXT (Sheet 4 of 4)

Field	Subfield or refinement	Entry	Explanation and action
BATTERY		NOR or REV	Enter the type of battery, normal or reverse. The default is NOR. The range is NOR or REV.
REVBAT		ON or OFF	Enter if reverse battery signaling must be available for 4-wire FXO and FXS LCs. The range of values is ON or OFF. The default value is OFF.
RATE		2400, 4800, 9600, 19200, or 56000	Enter the data rate (in bits per second). The default is 56000. The range is 2400, 4800, 9600, 19200, or 56000.
SCC		Y or N	For a secondary channel enter Y in this field. The default is N.
ZCS		Y or N	For zero-code suppression enter Y in this field. The default is N.
ERRCTL		Y or N	For error control enter Y in this field. The default is N.

Line card to field correlation

The entered value in field FCN of table LNINV determines what fields contain data in table LNINVEXT. The fields that table LNINVEXT contains appear in table LNINVEXT.

How the FCN field controls datafill (Sheet 1 of 2)

	Value of FCN fields in table LNINV									
LNINVEXT fields	***FXS***	***FXO***	***TO***	***ETO***	**DX**	***EM PLR TANDEM***	***OCU***	***SM***	***DPO***	***DPT***
TRMT	X	X	X	X	X	X			X	X
RCV	X	X	X	X	X	X			X	X
IMP	X	X	X Note	X	X	X			X	X
SL	X	X		X	X					
HT	X	X		X	X					

Note: This field appears only for the new 2-wire special service line cards (7A25, 7A26, 7A27).

Special Services (continued)

How the FCN field controls datafill (Sheet 2 of 2)

	Value of FCN fields in table LNINV									
LNINVEXT fields	***FXS***	***FXO***	***TO***	***ETO***	**DX**	***EM PLR TANDEM***	***OCU***	***SM***	***DPO***	***DPT***
BW	X	X		X	X					
LOADTYP	X	X		X	X					
PREE	X	X		X	X					
BATTERY	X	X			X					
REVBAT	X	X								
SC			X	X						
RBAL					X					
SIG						X				
RATE							X			
SCC							X			
ZCS							X			
ERRCTL							X			
CODEC	X	X							X	X
HYBRD	X	X	X						X	X

Note: This field appears only for the new 2-wire special service line cards (7A25, 7A26, 7A27).

The default values for the fields in LNINVEXT appear in the following table.

Default values in table LNINVEXT (Sheet 1 of 2)

	Value of FCN field in table LNINV:									
LNINVEXT fields	***FXS***	***FXO***	***TO***	***ETO***	***DX***	***EM PLR TANDEM***	***OCU***	***SM***	***DP O***	***DPT***
TRMT	50, 180 (Note 1)	50, 180 (Note 1)	50, 180 (Note1)	180	180	180			50	50
RCV	0, 90 (Note 1)	0, 90 (Note 1)	0, 90 (Note 1)	90	90	90			0	0
IMP	600	600	600	600	600	600			600	600
SL	0	0		0	0					
HT	0	0		0	0					
BW	0	0		0	0					
LOADTYP	N	N		N	N					
PREE	N	N		N	N					
BATTERY	NOR	NOR			NOR					
REVBAT	On (Note 2)	On (Note 2)								
SC			OFF	OFF						
RBAL					0					
SIG						EM1 PLR1 T60 (Note 3)				

Note 1: The first number is the default value for new two-wire LCs (7A25, 7A26, 7A27). The second number is default for four-wire LCs.

Note 2: The value for field REVBAT is ON if reverse battery signaling is required. Otherwise, enter OFF. For a CARDCODE of 7A26AA or 7A27AA, the only valid entry value is OFF.

Note 3: Default for EM is EM1; for PLR it is PLR1; for TANDEM it is T6O.

Special Services (continued)

Default values in table LNINVEXT (Sheet 2 of 2)

	Value of FCN field in table LNINV:									
LNINVEXT fields	***FXS***	***FXO***	***TO***	***ETO***	***DX***	***EM PLR TANDEM***	***OCU***	***SM***	***DP O***	***DPT***
RATE							56000			
SCC							N			
ZCS							Y			
ERRCTL							N			
CODEC	DYN	DYN							DYN	DYN
HYBRD	0	0	0						0	0

Note 1: The first number is the default value for new two-wire LCs (7A25, 7A26, 7A27). The second number is default for four-wire LCs.

Note 2: The value for field REVBAT is ON if reverse battery signaling is required. Otherwise, enter OFF. For a CARDCODE of 7A26AA or 7A27AA, the only valid entry value is OFF.

Note 3: Default for EM is EM1; for PLR it is PLR1; for TANDEM it is T6O.

Datafill example for table LNINVEXT

The following example describes an RCU configured for ETO, FXS, pulse link repeating (PLR), and dial pulse originating (DPO) applications.

The first card is a 7A20AA that does not have a signaling module. The second card is a two-wire FXB card. The third card is a 7A21AA card. The fourth card is the signaling module grouped with the third card. The last two entries in the display are for a 7A25AA.

Note: The new two-wire special service cards (7A25AA, 7A26AA, and 7A27AA) support two line circuits for each card. The two-wire cards can be assigned to any circuit number value in the accepted range (0 to31). Two-wire FXB cards and the four-wire special service cards must be assigned to even-numbered circuits. The 7A22AA signaling module in the FXB cards does not require assignment to even-numbered circuits. The following example demonstrates card assignment. The 7A22AA signaling module pairs with the 7A20AA or 7A21AA and must be assigned an odd-numbered circuit.

MAP example for table LNINVEXT

```
LEN                                          FCN
------------------------------------------------------------
REM1 00 00 00 00 ETO  180  90  150  N  N  0  0  600  N
REM1 00 00 00 02 FXS  180  90  600  N  0  0  0  N  NOR  ON
REM1 00 00 00 04 PLR  180  90  150 PLR1
REM1 00 00 00 05 SM
REM1 00 00 00 06 DPO  50   0  600 DYN 0
REM1 00 00 00 07 DPO  50   0  600 DYN 0
```

Datafilling table SPECCONN

Operating company personnel set up special-service connections in table SPECCONN. This table contains the following information:

- endpoints of hairpin connections
- connection types
- trunk conditioning types and data
- attenuation to be inserted
- RCU-to-subscriber side signaling

Special-service hairpin connections are set up and maintained through software. Operating company personnel from table SPECCONN can remove the set up connection.

A minimum of one endpoint of the special-service hairpin connection must terminate on a switch that supports special services. The endpoint can also terminate on a switch that connects to another switch that supports the services.

Special-service hairpin connections use DS-0 or RCU endpoints, which are entered in two fields of table SPECCONN.

The datafill for table SPECCONN appears in the following procedure. A modified table that describes how these fields apply to the SMU-RCU subsystem appears.

Special Services (continued)

For a description of table SPECCONN, refer to the data schema section of the *Translation Guide*. The CONTYPE field has an additional entry of CAB for connections that require A-bit and B-bit signaling.

Datafilling table SPECCONN (Sheet 1 of 5)

Field	Subfield or refinement	Entry	Explanation and action
ENDPT1		see subfield	Refer to subfield SCSEL for endpoint 1.
	SCSEL	RCUL, DSOT	The RCUL refers to a line on an RCU. DS0T refers to a channel on a DS-1 link that connects to a piece of digital telephone equipment. The equipment is not an RCU. ***Note:*** Make changes to fields with multiple entries in the PROMPT mode. The SSM channel units for special-service connections use the RCUL selector. For DS0T, system prompts appear for fields XPMTYPE, PMNO, PORT, CHNL, and TCINFO. For RCUL, system prompts appear for fields LEN, TCINFO, ATTEN, and FXBCGA.
XPMTYPE		SMU	Enter SMU.
PMNO		0-127	Enter the number of the SMU associated with the special service connection.
PORT		0-19	Enter the port number of the SMU associated with the DS-1 link used for the special service connection.
CHNL		1-24	Enter the DS-1 channel used as an endpoint in the special service connection.
TCINFO		see subfields	This field contains subfields CGAMODE, TCSIG, and TCPCM.

Datafilling table SPECCONN (Sheet 2 of 5)

Field	Subfield or refinement	Entry	Explanation and action
	CGAMODE	VN, VT, DT, FT, or OP	Enter the type of trunk conditioning to apply to each channel. The trunk conditioning applies when one endpoint of a special-service connection goes out of service. The range is VN, VT, DT, FT, or OP. VN = voice nontransparent. The DMS-100 switch supplies idle PCM code (01111111). Operating company personnel specify the A- and B-bits to be used. Refer to subfield TCSIG. VT = voice transparent. The DMS-100 switch supplies idle PCM. A- or B-bits are not used. DT = dataport transparent. The DMS-100 switch supplies multiplexer out-of-synchronization (MUX-OOS) PCM code (00011010). A- or B-bits are not used. FT = full transparent. Trunk conditioning is not applied. The incoming PCM pattern is transmitted. A- or B-bits are not used. OP = optional. The PCM code specified by operating company personnel is used (refer to subfield TCPCM). A- or B-bits are not used.
	TCSIG	0000-1111	Enter four bits. The first two bits are transmitted during the first 2.5 seconds of the failure. The system transmits the second two bits during the failure.
	TCPCM	00-FF	Enter the hex identification for binary bits for the PCM pattern. The two hex characters translate into eight binary bits. The system transmits the eight binary bits as PCM during the special-service connection failure.
ENDPT2		see subfield SCSEL	Refer to subfield SCSEL for endpoint 2.

Special Services (continued)

Datafilling table SPECCONN (Sheet 3 of 5)

Field	Subfield or refinement	Entry	Explanation and action
	SCSEL	RCUL or DSOT	The RCUL refers to a line on an RCU. The DS0T refers to a channel on a DS-1 link that connects to a piece of digital telephone equipment. The telephone equipment is not an RCU. ***Note:*** Make changes to fields with multiple entries in the PROMPT mode. The SSM channel units for special-service connections use the RCUL selector. For DS0T, system prompts appear for fields XPMTYPE, PMNO, PORT, CHNL, and TCINFO. For RCUL, system prompts appear for fields LEN, TCINFO, ATTEN, and FXBCGA.
LEN		see subfields	This field contains the following subfields: SITE, FRAME, UNIT, LSG, and CIRCUIT.
	SITE	alphanumeric	Enter the location of the RCU (alphanumeric). This entry is not optional. This entry does not have a default value assigned to it.
	FRAME	0-99	Enter the remote concentrator module frame number. The frame number is a software entity that identifies the RCU modules that share the same metallic test pair. The RCU modules that share the same metallic test pair are assigned the same frame number.
	UNIT	0-9	Enter the remote concentrator module unit number.
	LSG	0-16	Enter the line subgroup of the RCU on which the line is assigned.
	CIRCUIT	0-31	Enter the line card circuit number of the line subgroup where the card is assigned.
TCINFO		see subfields	This field contains subfields CGAMODE, TCSIG, and TCPCM.

Datafilling table SPECCONN (Sheet 4 of 5)

Field	Subfield or refinement	Entry	Explanation and action
	CGAMODE	VN, VT, DT, FT, or OP	Enter the type of trunk conditioning to apply to each channel. The trunk conditioning applies when one endpoint of a special-service connection goes out of service. The range is VN, VT, DT, FT, or OP. VN = voice nontransparent. The DMS-100 switch supplies idle PCM code (01111111). Operating company personnel specify A- and B-bits to be used. Refer to subfield TCSIG. VT = voice transparent. The DMS-100 switch supplies idle PCM. A- or B-bits are not used. DT = dataport transparent. The DMS-100 switch supplies multiplexer out-of-synchronization (MUX-OOS) PCM code (00011010). A- or B-bits are not used. FT = full transparent. Trunk conditioning is not applied. The incoming PCM pattern is transmitted. A- or B-bits are not used. OP = optional. PCM code specified by operating company personnel is used (refer to subfield TCPCM). A- or B-bits are not used.
	TCSIG	0000-1111	Enter four bits. The system transmits the first two bits during the first 2.5 seconds of the failure. The system transmits the second two bits during the failure.
	TCPCM	00-FF	Enter the hex identification for binary bits for the PCM pattern. The two hex characters translate into eight binary bits. The system transmits the eight binary bits as PCM during the special-service connection failure.

Special Services (continued)

Datafilling table SPECCONN (Sheet 5 of 5)

Field	Subfield or refinement	Entry	Explanation and action
ATTEN		0-7	Enter the amount of receive loss in dB that the FXB line card inserts. Enter any value for SSM channel units or the new two- and four-wire LCs. The two- and four-wire LCs do not use this field. The DMS-100 switch sets the field to 0 for these cards.
FXBCGA		ON or OFF	Enter the type of RCU-to-subscriber side supervisory signaling for use when the RCU enters total operation failure (TOF). The ON value indicates on-hook signaling. The OFF value indicates off-hook signaling. ***Note:*** This field does not apply to the new two-wire LCs (7A25, 7A26, 7A27) that operate in the TO mode.

RCU endpoint

The RCU endpoints are foreign exchange with battery reversal station (FXBS) end cards (NT3A12AB) or foreign exchange with battery reversal office (FXBO) end cards (NT3A13AB or NT3A13AC). The RCU endpoints are the new two- and four-wire special service cards.

For an RCU endpoint, datafill requires the following:

- the LEN of the subscriber line
- type of trunk conditioning
- trunk conditioning data
- attenuation inserted by the card
- type of supervisory signaling

The RCU must send the datafill requirements to the subscriber side when the RCU loses communication for FXB service.

DS-0 endpoint

DS-0 endpoints are channels on a DS-1 link. Datafill requires the peripheral name (SMU), peripheral number, P-side port, DS-1 channel, and trunk conditioning information.

Connection type field (CONTYPE)

The connection type field in table SPECCONN is entered in the following methods:

- pending (PEND)
- connected (CON)
- connected with A-bit and B-bit signaling (CAB)

The connection type can connect with A-bit and B-bit signaling. In this event, A- and B-bits synchronized with DS-1 framing set up a special-service hairpin connection in the SMU.

Pending indicates the connection is set up in table SPECCONN and is not established in the SMU. *Connected* indicates the connection is set up in table SPECCONN and is established in the SMU.

For connections with A-bit and B-bit signaling, the SMU extracts incoming A- and B-bits. The SMU inserts the bits again in the outgoing information stream. Timing limits cause the SMU to insert the A- and B-bits in to an outgoing time slot later than required. The SMU inserts the bits later than required for a given incoming time slot.

The SMU maintains order of the A- and B-bits. This action provides A- and B-bit transparency for voice connections.

The A- and B-bits remain unprocessed in connections that are not datafilled for A- and B-bit signaling. A voice connection normally uses A- and B-bits, while a data connection does not use these bits.

Special-service connection information

Operating company personnel can use the table editor to change the connection type of a special-service connection in table SPECCONN. A description of this process appears in the following example.

Permitted changes of connection types

From	To
PEND (pending)	CON
PEND	CAB
CON (connected)	PEND
CAB (connected with A- & B-bit signaling)	PEND

Special Services (continued)

When a connection changes from PEND to CON or CAB, the SMU connection information acquires a connection. The system prints an SCSS100 log if the SMU is in service.

When a connection changes from CON or CAB to PEND, the system deletes a connection from the SMU connection information. The system prints an SCSS100 log if the SMU is in service.

Status field (STATUS)

The status field of table SPECCONN can have the values ACTIVE, INACTIVE, MTC, or PMBUSY. The ACTIVE value indicates the SMU has the special-service connection. The INACTIVE value indicates the SMU does not have the special-service connection.

The MTC value indicates the SMU uses the special-service connection for maintenance. Maintenance includes seizure of an FXB line for testing from the MAP terminal or RCU maintenance card faceplate. Maintenance includes jack access initiated from the maintenance card faceplate.

The PMBUSY value indicates the SMU is out of service. Connections go to PMBUSY when the SMU goes out of service.

The status of a CON or CAB connection can be set to MTC when the SMU is in service. The status of these connections can be set to MTC when one of the following events occurs:

- An FXB line is seized for testing from the MAP terminal.
- A local line card test starts from the RCU maintenance card faceplate.
- Jack access starts from the faceplate of the maintenance card. Jack access does not interfere with the connection. Under jack access, the connection can transmit information.

Status field transitions

When the status of a special-service connection in the SMU changes, the DMS-100 switch automatically updates the status field. The status field is in table SPECCONN. Operating company personnel cannot change the STATUS field.

When the SMU returns to service, the CC sends the SMU special-service connection information. The SMU sets the status field of table SPECCONN to inactive.

If the SMU is in service and special-service connections are added or deleted, the SMU receives the information. The SMU sets the status field to inactive.

When both endpoints are set in service, the special-service connection is made, and the SMU updates the status field to active.

Possible state transitions for special-service connections appear in the following table.

State transitions of special-service connections (Sheet 1 of 2)

From state:	To state:ACTIVE	INACTIVE	MTC	PMBUSY
ACTIVE	N/A	The special-service connection breaks for reasons other than if the SMU becomes busy or the special-service line is seized for maintenance. The connection can break if FXB cards, line card carriers or DS-1 links fail. The connection can break if the INSVC field in table LNINV changes from Y to N.	Special-service line busied or line card local test or jack access initiated from faceplate of the maintenance card of the RCU.	SMU goes out of service.
INACTIVE	Endpoints are set in-service (CONTYPE changes from PEND to CON or CAB).	Does not apply	One endpoint is out of service, and the special-service line is seized for testing at the MAP terminal. The special-service line is seized at the faceplate of the RCU maintenance card. The SMU returns to service and a line endpoint continues to be busy.	SMU goes out of service.

Special Services (continued)

State transitions of special-service connections (Sheet 2 of 2)

From state:	To state:ACTIVE	INACTIVE	MTC	PMBUSY
MTC	Jack access terminate at the RCU maintenance card faceplate.	Special-service line released from testing.	Does not apply	SMU goes out of service.
PMBUSY	Does not apply	SMU returns to service	Does not apply	Does not appliy

Trunk conditioning

Trunk conditioning begins when a special-service connection endpoint goes out of service. Trunk conditioning occurs when signals for each channel are sent to the in-service endpoint. When the signals are sent to the endpoint, downstream switching equipment releases the special-service connection. The switching equipment stops billing, and removes the trunk from service.

When the out-of-service endpoint returns to service, the special-service connection establishes again and trunk conditioning stops.

The following types of trunk conditioning are supported:

- VN— Voice nontransparent. An idle PCM pattern (01111111) and any A- and B-bit is sent first for the first 2.5 s. Any other A- or B-bit pattern is sent during the failure. Enter A- and B-bit patterns in table SPECONN. The DMS-100 switch supplies the PCM pattern.
- VT— Voice transparent. An idle PCM pattern is sent first. The A- or B-bits are not used.
- DT— Dataport transparent. A multiplexer out-of-synchronization (MUX-OOS) PCM pattern (00011010) is sent initially. The A- or B-bits are not used.
- FT— Full transparent. Trunk conditioning is not used. The incoming PCM pattern is transmitted.
- OP— Optional. Operating company personnel specify the PCM pattern that is sent. The PCM pattern is entered in hexadecimal notation in table SPECCONN. The A- or B-bits are not used.

Trunk conditioning fields (CGAMODE, TCSIG, TCPCM)

The trunk conditioning fields of table SPECCONN indicate the type of trunk conditioning associated with the special-service connection. The types of

trunk conditioning are voice-nontransparent, voice-transparent, dataport-transparent, full transparent, or optional.

Optional PCM is a byte of any value the operating company personnel specify.

Trunk conditioning contains specified bit patterns applied to an in-service endpoint when the other endpoint is out of service. These bit patterns cause the release of special-service connection and the termination of any billing.

Attenuation field (ATTEN)

The attenuation field indicates the amount of receive loss (0 to7 dB) the line card inserts.

Note: This field does not apply to the new two- and four-wire special service cards (7A series). The system accepts any value in the range but the DMS-100 switch assigns an overriding value of 0.

RCU supervisory signaling

The RCU supplies on-hook or off-hook supervisory signaling to the subscriber side when the RCU enters total operation failure (TOF). Associations between supervisory signaling actions and types of RCU line cards appear in the following table.

FBX Supervisory signaling

Line Card Type	Supervisory SignalingOn Hook	Off Hook
FXB loop start	There is no action	There is no action
FXBS ground start	Tip open	Tip open for 3 s. Tip grounded after 3 s.
FXBS loop start	Loop open	Loop open for 3 s. Loop closed after 3 s.
FXBS ground start	Loop open, ring open	Loop open and ring open for 3 s. Ring grounded after 3 s.

RCU supervisory signaling field (FXBCGA)

The RCU supervisory signaling field indicates the type of signaling the RCU sends to the subscriber side when the loss of communication for special services. The subscriber side can be on-hook or off-hook. The RCU field

Special Services (continued)

indicates the signaling when communication for special services are lost. This condition occurs when the RCU enters TOF.

Note: This field does not apply to 7A25, 7A26, or 7A27 cards that operate in the TO mode.

Datafill examples for table SPECCONN

Sample datafill for special-service connections in table SPECCONN appear in the following examples.

Example 1 shows a pending RCU line-to-line, special-service hairpin connection. The SMU does not receive information on this connection. When the SMU is in service, the state of the connection is always PEND.

MAP example 1 for table SPECCONN

```
FIELD NAME    FIELD VALUE
----------    -----------
ENDPT1        RCUL  RCU0 3 2 2 10  VN 1000  0 ON
ENDPT2        RCUL  RCU0 1 3 4 26  VN 1000  0 ON
CONTYPE       PEND
STATUS        INACTIVE
```

Endpoint 1 is RCUL which indicates that this first endpoint is an FXB card on an RCU. The RCU0 3 2 2 10 is the LEN of the endpoint. The VN specifies voice-nontransparent trunk conditioning. The A- and B-bit pattern to be sent to the in-service endpoint is 10 for the first 2.5 s.

Pattern 00 is sent during the failure. The RCU FXB line card inserts 0 dB of loss for the information the card receives. The last entry, *ON*, indicates that the RCU supplies on-hook supervisory signaling.

Endpoint 2 is RCUL which indicates that this second endpoint is an FXB card on an RCU. The RCU0 1 3 4 26 is the LEN of the endpoint. The VN 1000 specifies voice-nontransparent trunk conditioning.

The A- and B-bit pattern for the first 2.5 s is 10, and the pattern 00 is used for the duration of the failure. The FXB line card inserts 0 dB of loss to the information the card receives. The last entry in the tuple, *ON*, indicates the RCU supplies on-hook supervisory signaling.

Connection type is pending which indicates that the special-service hairpin connection is entered. This special-service hairpin connection is not set up in the SMU.

Status is inactive.

An RCU line-to-DS-0 special-service connection appears in example 2.

MAP example 2 for table SPECCONN

```
FIELD NAME    FIELD VALUE
----------    -----------
ENDPT1        RCUL  REM1 0 0 11 2  VN  0000 2 ON
ENDPT2        DS0T  SMU 0 11 1     VN  1010
CONTYPE       CAB
STATUS        MTC
```

The RCUL indicates *Endpoint 1*. Endpoint 1 is an FXB line card in an RCU. The LEN is REM1 0 0 11 2. The VN specifies voice-nontransparent trunk conditioning with the A- and B-bits set to 00 for the first 2.5 s. The VN specifies voice-nontransparent trunk conditioning with the same 00 pattern used during the failure.

The RCU FXB line card inserts 2 dB of loss for the information the card receives. The RCU uses on-hook supervisory signaling that ON indicates.

The DS0T indicates that *Endpoint 2* is a DS-1 channel. The peripheral module is SMU 0. Port 11 of this SMU connects to the DS-1 link on which channel 1, the DS-0 channel, is. The VN specifies voice-nontransparent trunk conditioning.

The A- and B-bit pattern is 10. This pattern is used for the first 2.5 s of trunk conditioning. This pattern is used during the failure.

Connection type is CAB, which indicates the connection of the special-service connection. The A- and B-bits are extracted from the information stream and inserted again.

Status is MTC, which indicates the first endpoint goes through maintenance. The endpoint is the only line endpoint in the connection. For example, the endpoint is seized for tests from the MAP terminal. For example, the endpoint goes through a local line test initiated from the faceplate of the maintenance card at the RCU.

Special Services (continued)

A DS-0 channel-to-RCU line special-service connection appears in example 3.

MAP example 3 for table SPECCONN

```
FIELD NAME    FIELD VALUE
----------    -----------
ENDPT1        DS0T SMU 1 2 22   VN 0010
ENDPT2        RCUL Rem1 0 0 0 2 VN 1011  4 OFF
CONTYPE       CAB
STATUS        ACTIVE
```

The DSOT indicates that *Endpoint 1* is a channel on a DS-1 link. The SMU 1 is the peripheral module that connects to the DS-1 link through port 2. The DS-1 channel is 22. The VN indicates that voice-nontransparent trunk conditioning is used. An A- and B-bit pattern of 00 is sent for the first 2.5 s of trunk conditioning. A pattern of 10 is sent during the failure.

The RCUL indicates that *Endpoint 2* is an FXB card on an RCU. The endpoint has a LEN of Rem1 0 0 0 2. The VN indicates voice-nontransparent trunk conditioning is used. An A- and B-bit pattern of 10 is sent for the first 2.5 s. A pattern of 11 is sent during the failure.

The FXB line card inserts 4 dB of loss to received information. The RCU uses off-hook supervisory signaling.

Connection type is CAB, which indicates the connection uses A- and B-bits. The SMU extracts and inserts A- and B-bits again.

Status is ACTIVE, which indicates the connection is set up and can transmit information.

A DS-0 channel-to-DS-0 channel, special-service connection appears in example 4. The SMU 2 is out of service.

MAP example 4 for table SPECCONN

```
FIELD NAME    FIELD VALUE
----------    -----------
ENDPT1        DS0T    SMU 2 5 6  DT
ENDPT2        DS0T    SMU 2 9 1  DT
CONTYPE       CON
STATUS        PMBUSY
```

Endpoint 1 is a DS-0 channel on a DS-1 link. The SMU 2 is the PM for the endpoint. The SMU 2 uses port 5 for the endpoint and channel 6 of the DS-1 link. The DT specifies dataport-transparent trunk conditioning.

Endpoint 2 is a DS-0 channel on a DS-1 link. The SMU 2 is the PM for the endpoint. The SMU 2 uses port 9 for the endpoint and channel 1 of the DS-1 link. The DT specifies dataport-transparent trunk conditioning.

Connection type is connected. When this connection is set up in the SMU, the A- and B-bits are not extracted and inserted again.

Status is PMBUSY, which indicates the SMU 2 is out of service.

A special-service connection appears in the following example. Endpoints are an FXB line card on an RCU and a DS-0 channel on a DS-1 link. The subscriber circuit on the FXB line card has a LEN of REM1 3 2 2 0.

This endpoint uses voice-nontransparent trunk conditioning if a special-service connection failure occurs. The A- and B-bits transmitted for the first 2.5 s are 10. These bits are transmitted during the failure.

The FXB card inserts 0 dB of loss for receive pulse code modulation (PCM) information. The RCU endpoint uses on-hook supervisory signaling when the RCU loses communication for the special-service connection.

The second endpoint is a DS-0 channel on a DS-1 link. The SMU associated with that line is SMU 2. Port 2 of this SMU connects to the DS-1 link. The DS-0 channel on the line is channel 3. This endpoint uses voice-nontransparent trunk conditioning.

The A- and B-bits transmitted during special-service connection failure are 0 for the first 2.5 s of the failure. After 2.5 s the bits change to 10, and these values are transmitted during the failure.

The connection type connects with A- and B-bit signaling. The state of the connection is active, which indicates the connection is entered and set up in the SMU.

Special Services (continued)

Input appears vertically because of limited space:

```
FIELD          ENTRY
-----          -----
ENDPT1         RCUL
SITE           REM1
FRAME          3
UNIT           2
LINE SUBGROUP  2
CIRCUIT        0
CGAMODE        VN
TCSIG          1010
ATTEN          0
FXBCGA         ON
ENDPT2         DS0
XPMTYPE        SMU
PMNO           2
PORT           2
CHNL           3
CGAMODE        VN
TCSIG          0010
CONTYPE        CAB
STATUS         ACTIVE
```

Note: Operating company personnel can enter any status because the entry is not used. The system first sets the status to inactive. When the connection is established, the system sets the status to active.

A two- or four-wire special service line card can be available in table LNINV. When this event occurs, that card can be assigned to the hairpin endpoint connection in table SPECCONN. The SM card NT7A22AA cannot be assigned to the hairpin endpoint connection. These connections follow the current guidelines for SMU hairpin connections explained in this section.

The new two- and four-wire special service line cards (7A series) must use an endpoint selector of RCUL. The ATTEN field does not have meaning for these line cards. Any correct value will be accepted and the DMS-100 switch assigns a value of 0.

Tools for verifying translations

Special Services does not use tools for verify translations.

SERVORD

Service order operations cannot be executed on RCU lines that are endpoints of special-service connections. Service orders cannot be executed on FXBO lines under any conditions because station equipment is not at the end of the loop.

Service orders cannot be executed on SSM channel units.

5 Subscriber Carrier Module-100 Access

Understanding SMA translations

This document uses the term Subscriber Carrier Module-100 Access, or SMA, to describe the digital interface. The digital interface is between a Digital Multiplex System-100 (DMS-100) and the S/DMS AccessNode. This interface is between DMS-100/200 digital switch and the S/DMS AccessNode. Operating company personnel must understand SMA concepts and terminology before personnel enter data in the SMA. This chapter describes the product and provides signaling information to understand SMA operation.

The Subscriber Carrier Module-100 Access

The SMA is a peripheral module (PM) based on the integrated services digital network (ISDN) line trunk controller (LTCI) architecture.

This integrated configuration removes multiple digital and analog conversions. This condition improves transmission quality. Integrated configuration decreases floor space and hardware requirements in the host office. This condition decreases capital costs. An integrated configuration avoids back-to-back line circuits. An integrated configuration avoids voice-frequency appearances of subscriber lines in the main distribution frame (MDF). This condition decreases equipment requirements for the MDF, line cards and PMs for the DMS SuperNode network.

SMA system summary

This section summarizes the SMA system. The hardware parts and software subsystems of the SMA system appear in the following figure.

Figure 5-1 SMA system configuration

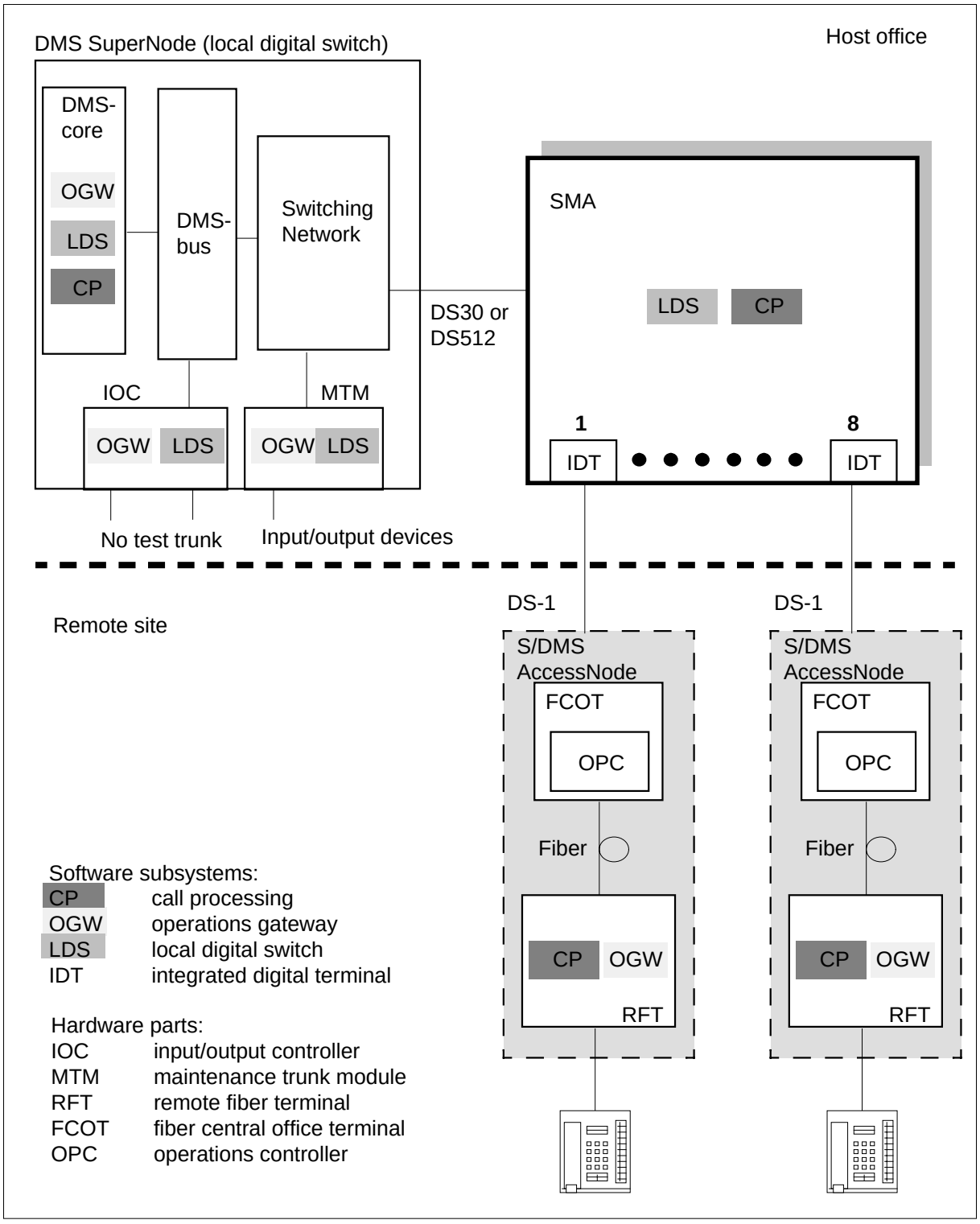

SMA system functionality

Introduction

This section describes the following parts of SMA system functionality:

- voice and data communications
- call setup, call take-down and call monitoring messages
- operations, administration, maintenance and provisioning (OAM&P) messages
- ISDN Basic Rate Interface (BRI) signaling is functional only. The SMA does not support stimulus signaling.
- Bellcore compliant Analog Display Services Interface (ADSI) tones and compatible voiceband data
- path protection switching
- communications protocols
- call processing
- service abilities

Note: The defenition remote digital terminal (RDT) in this chapter applies to the S/DMS AccessNode remotes. The S/DMS AccessNode remotes are also called remote fiber terminals (RFT). This chapter uses the defenitionS/DMS AccessNode or RFT for specified references to a remote access vehicle. This term refers to the next generation digital loop carrier (NGDLC), the S/DMS AccessNode, from Northern Telecom.

Voice and data communications

The system transfers voice and data calls between RDT and the Subscriber Carrier Module-100 Access (SMA) through DS-1 links. The system uses extended superframe format (ESF) signaling.

DS-1 frame format

The SMA and RDT exchange information over DS-1 links. The DS-1 links operate at a rate of 1.544 Mbps with a sampling frequency of 8000 frames each second.

The DS-1 frame contains 24 8-bit bytes and a framing bit for a total of 193 bits for each frame. The 8-bit bytes fit in time slots or channels for a total of 24 channels in each frame. The framing bit precedes the 24 channels. These channels carry speech information, signaling information or operations information. The format of a DS-1 frame appears in the following figure.

Figure 5-2 DS-1 frame format

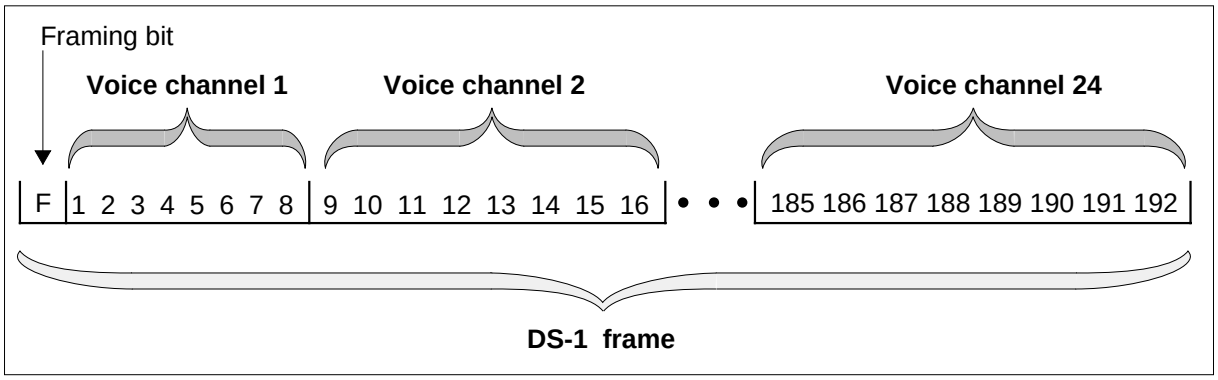

The framing bit identifies the location of the first time slot in the frame. When the RDT or SMA receives a framing bit, the framing bit receives notification. The notification informs the framing bit that the following 8 bits contain information from time slot one. The framing bit is also used for frame alignment in the extended superframe alignment.

Extended superframe format signaling

Extended superframe format (ESF) signaling monitors DS-1 link performance and maintenance functions. The ESF signaling improves robbed bit signaling messages to allow ABCD bits to indicate messages. The ESF signaling does not allow AB bits to indicate messages. The superframe format uses AB bits.

The ESF contains 24 DS-1 frames. In ESF, the framing bits form a 24-bit pattern. Each 24-channel frame receives one framing bit. The 24-bit pattern indicates three types of information.

- frame pattern sequence (FPS)—The framing bit carries an FPS value of 001010. The FPS starts at the fourth frame and occurs every fourth frame with use of the framing bits. The FPS and the cyclic redundancy check (CRC) define an in-frame condition .
- facility data link (FDL) performance. This ability is not used—The FDL 4 is a Kbps message. The FDL starts at the first frame and occurs every other frame with use of the framing bits. The SMA does not support facility protection. The SMA does not use FDL messaging bits.
- cyclic redundancy check—The CRC starts at the second frame and occurs every fourth frame with use of the framing bits. In an extended superframe, the CRC checks a block check field six times. The CRC-6 check detects bits that copy an FSP bit. The CRC-6 check determines if an out-of-frame condition occurs.

The format of a DS-1 ESF appears in the following figure.

Figure 5-3 DS-1 ESF format

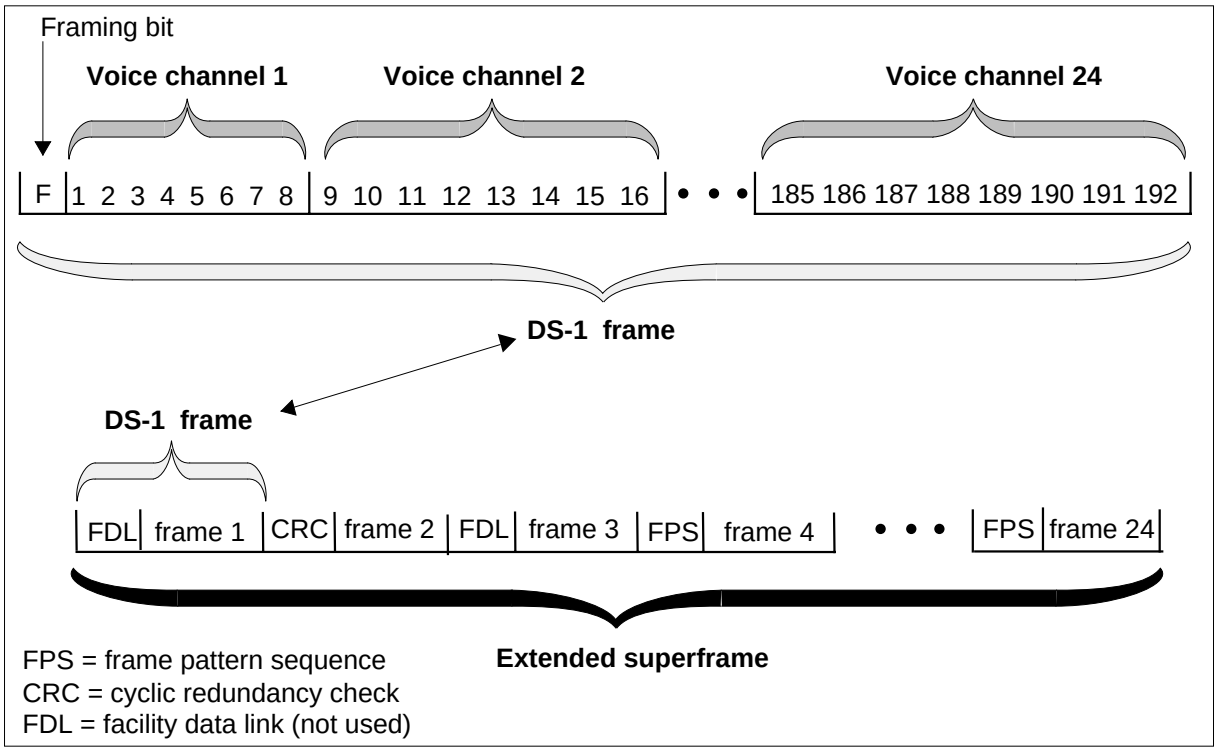

The following table describes the superframe alignment pattern.

Figure 5-4 Superframe alignment pattern

Frame number	Framing bit type	Framing bit value
1	FDL	m
2	CRC	CB1
3	FDL	m
4	FPS	0
5	FDL	m
6	CRC	CB2
7	FDL	m
8	FPS	0
9	FDL	m
10	CRC	CB3
11	FDL	m
12	FPS	1
13	FDL	m
14	CRC	CB4
15	FDL	m
16	FPS	0
17	FDL	m
18	CRC	CB5
19	FDL	m
20	FPS	1
21	FDL	m
22	CRC	CB6
23	FDL	m
24	FPS	0

m = message bits
CB = check bits

Call setup, call take-down, and call monitoring

Call setup, call take-down and call monitoring signals use common signaling channel (CSC) signaling between the SMA and the S/DMS AccessNode.

Common signaling channel signaling

The CSC is a message-oriented signaling type that sets up, monitors and takes down calls in the S/DMS AccessNode. These call processing signals:

- transmit over channel 24 of a DS-1 link
- use Q.931 message protocol
- contain path protection
- can contain a maximum of 52 octets

All CSC call processing signals transmit over a specified channel. This condition does not occur for TR-303 hybrid signaling (robbed bit signaling). Channel 24 of a DS-1 frame is the specified CSC channel. Eight bits of each

message transmit with each DS-1 frame. Eight bits of each message is called an octet.

Signaling between an SMA and an S/DMS AccessNode appears in the following figure. This procedure occurs over a DS-1 link with the CSC channel transmit over channel 24.

Figure 5-5 SMA to S/DMS AccessNode connectivity

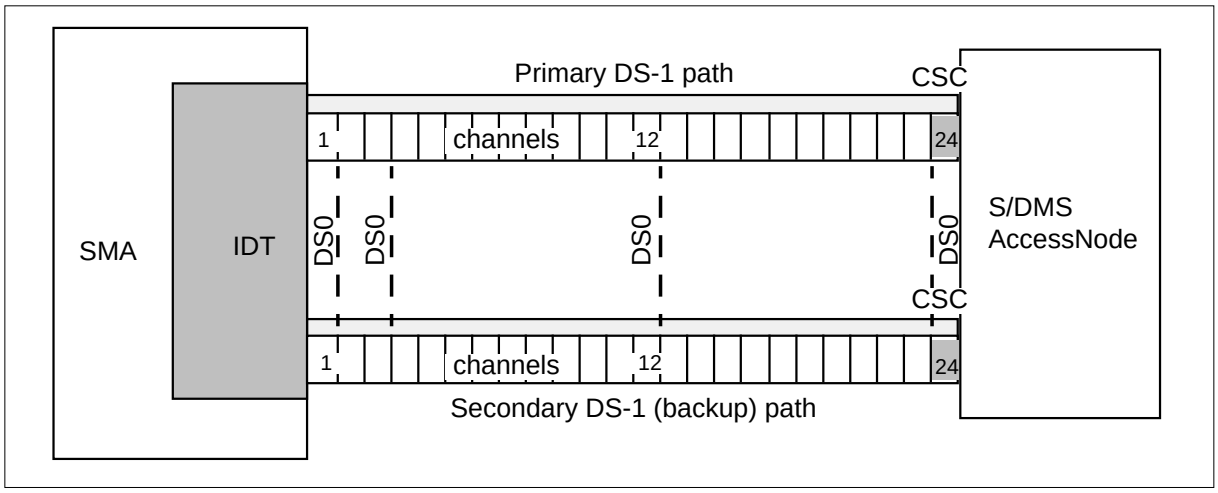

Operation, administration, maintenance, and provisioning (OAM&P)

The system transmits operations, administration, maintenance and provisioning messages over embedded operations channel (EOC) message channels. The system system sends these features for an SMA and an S/DMS AccessNode. This section describes the EOC message signaling.

EOC message signaling

The EOC is an operations channel for messages. The EOC exchanges OAM&P information between the RDT and the IDT. These operations messages:

- transmit over channel 12 of a DS-1 link
- use EOC communication protocol
- use ASN.1 basic coding rules
- contain path protection

The SMA communicates EOC messages between the IDT and the RDT to perform the following functions:

- initialize and maintain object-oriented static data at the RDT
- provide line test position (LTP) abilities to the RDT
- allow the RDT to connect to outside test systems

The RDT uses EOC messages to inform the SMA of activities of the RDT through logs and remote telemetry.

The following figure describes signaling between an SMA and an RDT. This condition occurs over a DS-1 link with the EOC channel that transmit over channel 12.

Figure 5-6 SMA to RDT signaling over the EOC channel

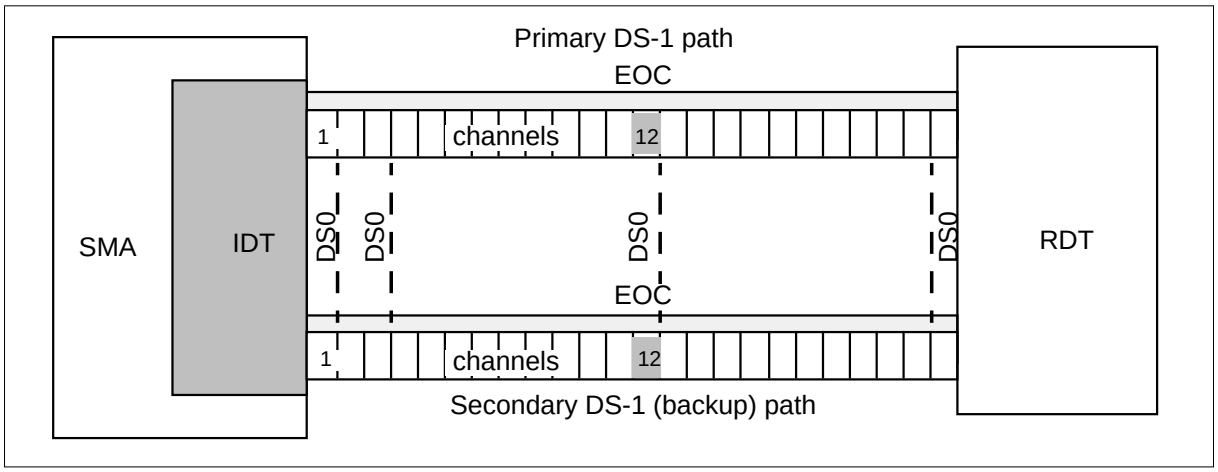

The following DMS applications use EOC message signaling:

- DMS line provisioning-This application controls the datafill of subscriber services. Line provisioning refers to hardware provisioning and service provisioning.
- DMS line maintenance and automatic line testing (ALT)-This application provides control and allows operating company personnel to monitor subscriber line states from the MAP terminal. The application allows for diagnostic tests of the lines.
- logs and alarms-This application reports alarms and events to the DMS MAP terminal and the operations support system that connects to the RDT.
- node maintenance-This application controls voice and data channels between the DMS CM and peripheral devices that includes the SMA and the RDT.

ISDN BRI signaling

The ISDN basic rate interface (ISDN BRI) is normally called 2B+D. The ISDN BRI contains two 64-kbit B-channels for voice and data and a 16-kbit D-channel for signaling and packet data. The two types of ISDN BRI signaling are functional and stimulus.

Internal software in the set of the functional BRI terminal supports functional BRI signaling. The user can use Q.931 protocol and signaling control protocol to send call control messages between the terminal and the network. The SMA does not support stimulus BRI signaling

The ISDN BRI contains two B-channels for voice and packet data and a D-channel for signaling. The CSC messages assign B-channels for voice and data use. The D-channel is nailed up at provisioning time. The D-channel is a permanent assignment of the network connection. Messages over the EOC control the assignment of the D-channel.

National ISDN-2/3 BRI Phase I feature

The National ISDN-2/3 BRI Phase I feature increases the operational versatility of BRI line interface configurations. The National ISDN-2/3 BRI Phase I feature expands the BRI service options available to end users. The user must purchase the software optionality control (SOC) NI000050 in NA007 to access the improved ISDN abilities that this section describes.

- Two B-channel access—This ability allows a terminal to access both B-channels at the same time with a single terminal endpoint identifier (TEI). The terminal must support voiceband information (VI) and circuit mode data (CMD) or VI or CMD. This ability applies to fully initializing terminals (FIT) and non-initializing terminals (NIT). Provisioning controls the number of B-channels a terminal can access.
- Support for non-initializing terminals (NIT)—This ability supports one non-initializing terminal on a BRI interface that has the default logical terminal. An NIT is a new class of BRI terminal and does not initialize Layer 3. An NIT does not require a service profile identifier (SPID). An SPID is an identification number that a terminal in the initialization process uses.
- Assignment of fixed feature keys to the default logical terminal for NITs—This ability allows the assignment of the following features to the NIT:
  - — call forwarding
  - — message waiting
  - — conference calling

— call transfer

— call drop

- The NIT uses dial-access procedures or feature key management procedures to access these features.

The National ISDN-2/3 BRI Phase I feature introduces the following interactions:

- This feature changes the method in which additional call offering (ACO) operates for terminals that have the access privilege entered for two B-channel access. The terminal can have a call active and one B-channel free, a termination can occur. When this condition occurs, the terminating SETUP contains the channel identifier information element (CID IE). The system codes the CID IE to the value of the free B-channel. For terminals without the two B-channel access privilege, this message has the CID IE coded to no-channel.
- Following VI terminations provides the terminal with the CID IE coded to no channel. This condition occurs when flexible calling is active on a 2B FIT/NIT conference controller.

Bellcore compliant ADSI tones and compatible voiceband data

The SMA generates alert tones to support the Deluxe Spontaneous Call Waiting Identification (DSCWID) feature. When a line with the DSCWID option has a call a second call can attempt to terminate to that line. The SMA provides one of the following types of alerting signals or tones:

- a subscriber alerting signal (SAS)—The SAS is the tone the subscriber recognizes as the call waiting tone.
- an SAS that a customer premises equipment (CPE) alerting signal (CAS) follows—The CAS alerts the CPE of incoming data. The SAS that a CAS follows must trigger an ADSI compatible CPE to display the DSCWID options. The CAS tone prepares the CPE to receive caller identification (CID) data.

The DSCWID CPE generates an acknowledge (ACK) tone to indicate the DSCWID CPE can receive DSCWID data. If the CPE is ADSI compatible, the CPE sends a DTMF A ACK signal to the CAS. If the CPE is a SCWID CPE, the CPE sends a DTMF D ACK signal to the CAS. When the system sends alert tones, the subscriber can control the incoming call with the CPE softkeys if the CPE is ADSI. The subscriber can control the incoming call with hard-coded keys if the CPE is an SCWID or a 2500 set.

A T-tone timer sets the maximum amount of time between the process to send a flash and the DTMF digit. This condition occurs on an ADSI set. After the SMA receives a flash signal from the ADSI compatible CPE of the customer, the SMA starts a T-tone timer. The value of T-tone is 600 ms, during which

the speech path is mute. The T-tone timer is for the first option of a DSCWID call. The CPE type does not affect this procedure. Following DSCWID options on an ADSI set use the T-tone timer.

Following DSCWID options on a SCWID or 2500 uses a new timer (T-flash). The system uses the T-flash after the customer answers a call. In SCWID and 2500 sets, the T-flash provides the customer with time to select an option after a flash. A subscriber does not have time to flash and dial a DTMF digit in 600 ms. The T-flash is a timer set from 1 s to 8 s. The operating company controls the timer. The default value is 1.5 s. The SMA starts the T-flash timer if the NON-ADSI field is set to Y. The SMA receives a flash signal from the SCWID or 2500 set of the customer during the held or conference call state. If the SMA cannot attach a UTR before 400 ms, the system applies the RETURN option.

Note: For Bellcore TR-416 compliance, the SMA must provide options if the SMA detects a flash and cannot attach a UTR. The SMA sends a flash to the CC if the SMA cannot attach a UTR in 400 ms.

ADSI interactions

The following ADSI interactions apply:

- A warm switch of activity (SWACT) during the download does not allow the CPE to receive data. Transmission of softkey data to the CPE does not allow the CPE to receive data. Failure of the CPE to receive all of the data causes an unstable ADSI call.
- After a warm SWACT, a next transmit to the CPE set causes the active ADSI session to drop.
- A busy return to service (RTS) of the CMR circuit card, causes an ADSI call that is not stable. This action occurs when an application session is active.
- A busy of the CMR circuit card on the active unit of the XPM does not allow CLASS services to function. The CLASS services use the CMR card circuit.

ADSI limit

A complete ADSI session requires an ADSI compatible CPE. Ten ADSI sessions are active for each CMR circuit card.

ADSI hardware requirements

The hardware requirements to support ADSI ability are as follows:

- The system requires an NT6X78AB card to transmit softkey and display information to the CPE.
- The system requires an NT6X69AD (Tone ROM) circuit card. The NT6X69AD circuit card must contain the ADSI tone that TR-30 defines.

Path protection switching

Path protection switching protects the EOC and CSC message and signaling channels. The SMA supports one-for-one path protection switching for these messaging and signaling channels. Path protection switching controls the switching of activity from the active EOC and CSC to the backup EOC and CSC. Path protection switching provides end-to-end protection from failures of message processing hardware in the SMA and the RDT.

Automatic or manual procedures can start path protection switching. The SMA or the RDT can start automatic path protection when the SMA or RDT detects a fault. For maintenance purposes, use the integrated digital terminal (IDT) level of the MAP terminal to manually start the path protection switching.

The following concepts apply to protection switching:

- path—a CSC or EOC message channel
- active path—the path or channel that is in the active state. The active path carries CSC or EOC messages and messages for protection switching.
- standby path—the path in the standby state. The standby path carries only messages that allow the path to become the active channel.
- protection switch—what occurs when the active path changes state to standby. This switch also changes the standby state to the active path.

The rules for protection switching are as follows:

- The IDT or RDT must be able to detect a failure and start a protection switch
- When a failure on a channel and protection switching occurs, a switch back does not occur. In this occurrence, the switch back is to the original active or inactive configuration. This condition occurs when the system clears the fault.
- A standby path remains in multiple-frame operation when possible

SMA to S/DMS AccessNode path protection switching

For each IDT to RFT connection, a dedicated CSC and EOC on two links is present. One EOC and CSC messaging path can be active on the two links. Backup requires the inactive EOC and CSC messaging paths. The EOC message paths can be active on one link and the CSC message path active on the other link. The EOC and CSC can be active on the same link.

The SMA configuration and the datafill of associated tables determines path protection switching. The first two link assignments in table RDTINV, field LINKTAB are the primary and secondary links. These links carry CSC and EOC messaging.

The following figure describes CSC and EOC path protection.

Figure 5-7 DS-1 control channels

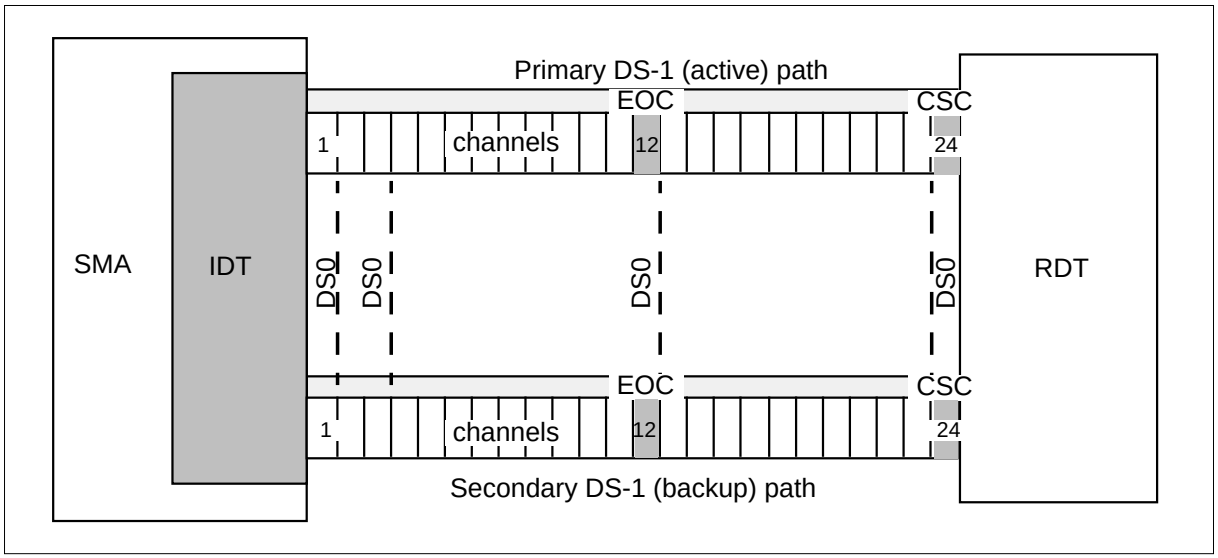

Manual path protection switching control

From the MAP terminal, operating company personnel can control path protection switching with the following procedures:

- start a protection switch for the EOC and the CSC channel
- start a forced protection switch for the CSC or the EOC channel
- prevent a standby EOC or CSC path to become active
- enable a standby EOC or CSC to become active, if path protection switching requires these channels to become active

Automatic path protection switching

The DS-1 links between the SMA and the S/DMS AccessNode contain primary and secondary CSCs and EOCs. If an active CSC or EOC fails, an automatic switch to the protection channel occurs.

A protection switch occurs on the CSC or EOC when the following conditions occur:

- detection of failures from Q.921 protocol, like failure to maintain multiple-frame operation. An example of this condition is an exceeded message frame retransmissions N200 LAPD counter.
- the computing module receives switch message through manual intervention
- the computing module receives a switch message from the RDT

Manual and automatic protection switching limits

The limits for manual and automatic protection switching are as follows:

- When you do not allow a path to become active, but that path is active, a protection switch does not occur.
- When you prevent a path, you cannot automatically or manually switch to the path.
- When you prevent a path, you cannot start a forced switch to that path

Communication protocols

The RFT communicates with the DMS SuperNode switch over DS-1 links that terminate on the SMA. To provide subscriber services from an RDT and to support communication between the SMA and the RDT, the following protocols apply:

- Q.921 CCITT link access procedure on the D-channel (LAPD)
- Q.931 CCITT Digital Network Access
- EOC communication protocol
- DS30 protocol

Q.921 CCITT LAPD protocol

The Q.921 LAPD protocol performs the following functions:

- establishes data link communications between an integrated digital terminal (IDT) and an RDT
- transmits information sent from a higher layer protocol
- receives information for delivery to a higher layer protocol

The Q.921 protocol transmits the following messages:

- common signal channel (CSC) messages for RFTs
- embedded operations channel (EOC) messages

Table RDTINV allows the user to configure the Q.921 protocol parameters. If the LAPD parameters must change, the two parameters on both ends (RDT and DMS) must change at the same time.

Table 5-1 RDTINV LAPD parameters

Parameter	Description
Maximum number of unacknowledged frames (K)	This number is the maximum number of message frames that are not known that remain. The system can send these frames between the IDT and the RDT. This parameter changes the LAPD window size.
Maximum number of retransmissions (N200)	This number is the maximum number of message frame retransmissions allows.
Maximum number of octets in one frame (N201)	This number is the maximum number of octets that the message frame allows in the information field.
Maximum time to wait for acknowledgement for one frame (T200)	This value is the maximum length of time a data link layer entity waits for acknowledgement (time-out) of a transmitted message frame. The time appears in milliseconds (ms).
Period of inactivity on data link (T203)	This value is the maximum time in seconds (s) the system allows without an exchange of message frames.

Q.931 CCITT protocol

The Q.931 protocol communicates call setup, call take-down and call monitoring information. This procedure occurs between the integrated digital terminal (IDT) on the SMA and the RFT. The SMA must translate the Q.931 generic-based signaling messages that the RDT sends. The messages must translate to a message format the host can understand. The host must translate the same signaling messages that the RDT sends to a message format that the SMA can understand. The following figure describes signal flow from the RDT through the SMA.

Figure 5-8 Message channel routing in the SMA

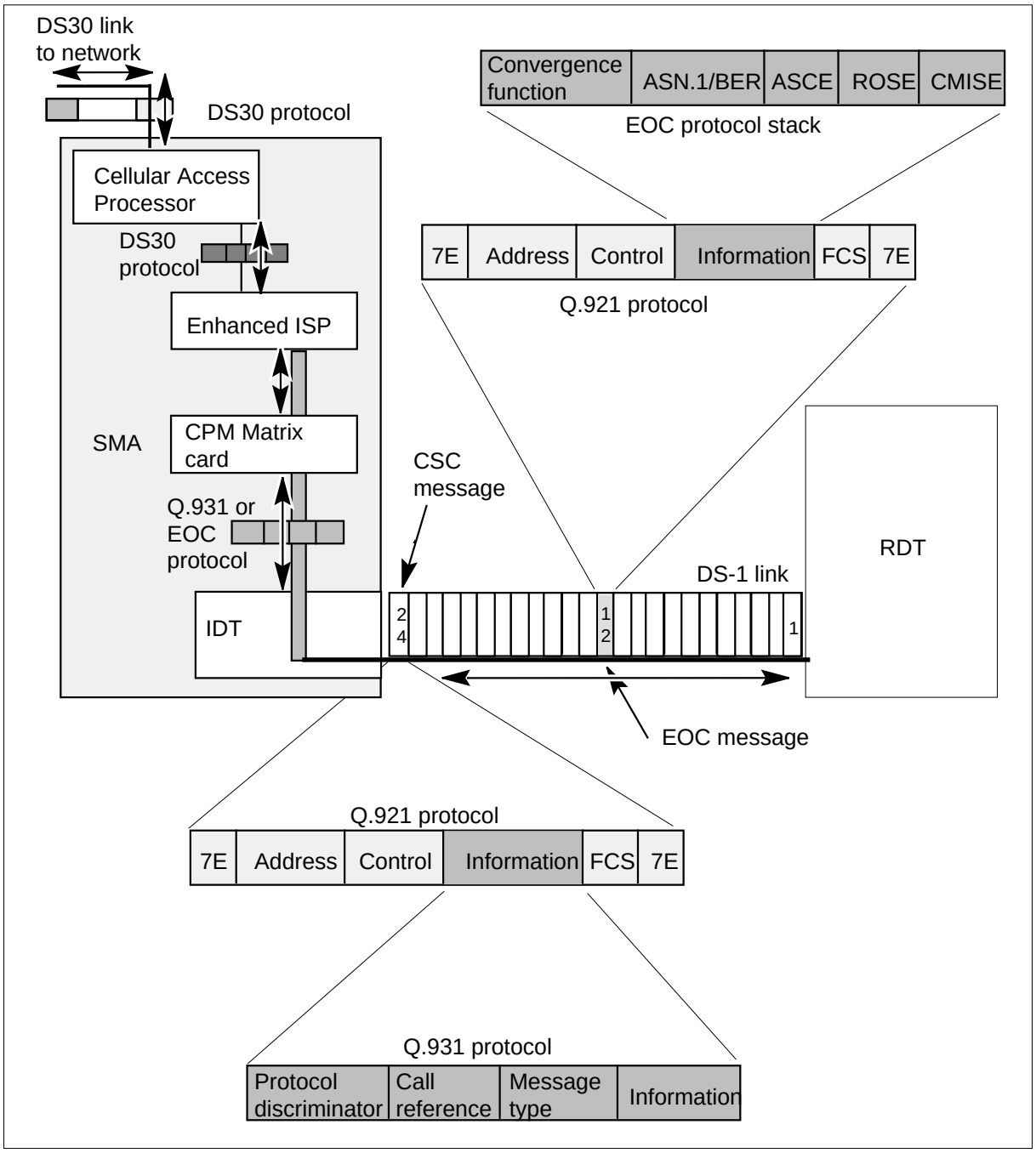

Q.931 protocol message structure

A Q.931 protocol message contains the following parts in the following order:

- protocol discriminator
- call reference

- message type
- information elements

For some messages, the information element is optional. The following figure describes Q.931 message structure.

Figure 5-9 Q.931 protocol message structure

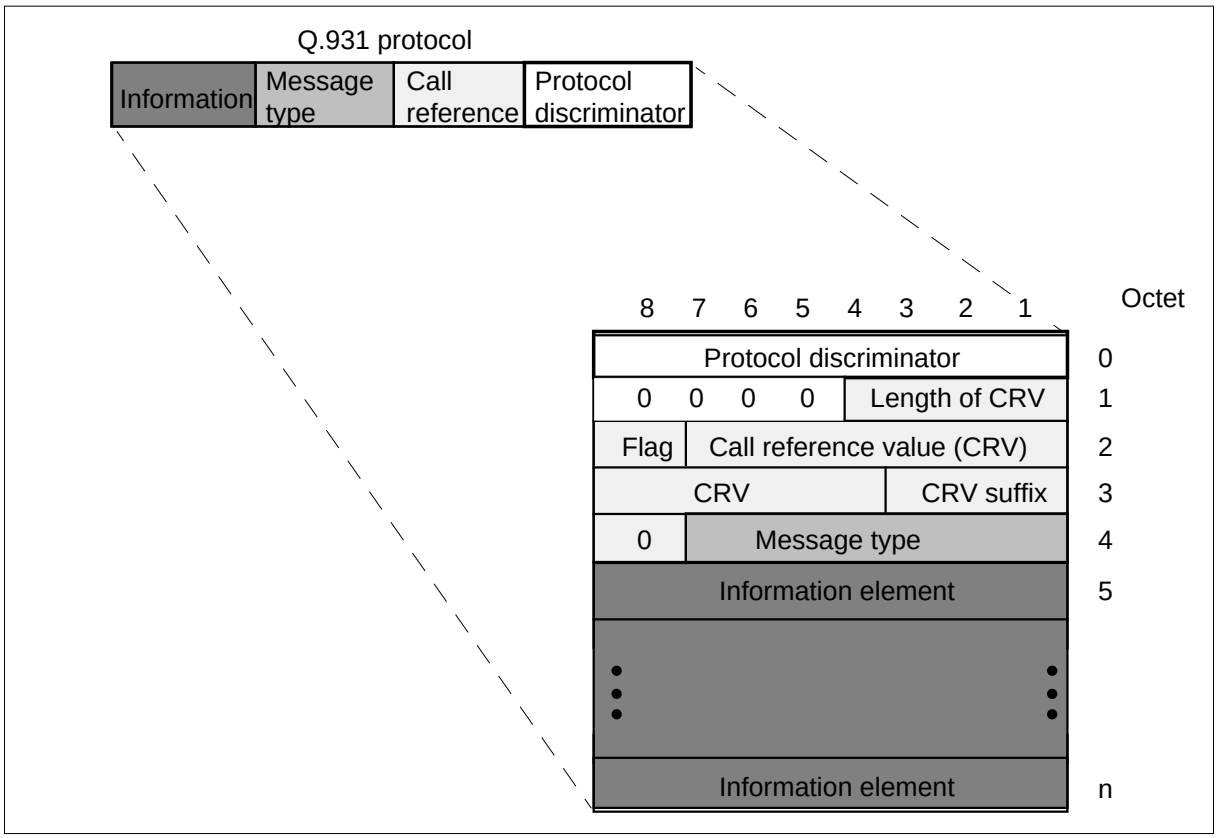

Protocol discriminator

The protocol discriminator is the first part of a message. The protocol discriminator identifies the type of message. The bit sequence 01001111 identifies a Q.931 protocol message.

Call reference

The call reference is the second part of an message. The call reference identifies the line termination where the message applies. For ISDN, call reference identifies the basic rate access (BRA) B-channel termination.

The call reference length value is 2 octets. This condition allows 4095 line terminations.

The call reference flag identifies the message originator. The message originator sets this flag to a value of 0. The destination side sets this flag to a value of 1.

The call reference value contains bits 1 to 7 of octet 2, and bits 4 to 8 of octet 3. The call reference value identifies the line termination.

The call reference suffix supports ISDN BRA line terminations. A suffix of 000 indicates a line termination of only one channel. A suffix of 001 indicates a line termination that associates with a B1 channel. A suffix of 010 indicates a line termination that associates with a B2 channel.

Message type

The message type is the third part of a message. The message type identifies the type of Q.931 protocol message that follows. Each message has a different bit assignment.

Messages for time slot assignment divide in two groups. The first group is messages for call establishment. The second group is messages for call take-down or disestablishment.

The Q.931 protocol message types appear with the different message type identifiers in the following table.

Table 5-2 Q.931 protocol message types and identifiers (Sheet 1 of 2)

Message type	Specified identifier	Bit sequence
Establishment message	Call proceeding	00000010
	Alerting	00000001
	Setup	00000101
	Setup acknowledge	00001101
Disestablishment messages	Disconnect	01000101
	Release	01001101
	Release complete	01011010
Messages for signaling	Connect	00000111
	Information	01111011
	Notify	01101110

Table 5-2 Q.931 protocol message types and identifiers (Sheet 2 of 2)

Message type	Specified identifier	Bit sequence
Messages for management	Status	01110101
	Status enquiry	01110101
Q.931 messages used by ISDN	Setup	00000101
	Connect	00000111
	Status	01110101
	Audit	
	Disconnect	01000101
	Release	01001101
	Release complete	01011010

Information element

The information element is the last part of a Q.931 message. The information element is sometimes optional.

Each information element contains a complex structure and different. The only common structural element in each information element is the information element identifier.

The names and functions of Q.931 message information elements appear in the following table:

Table 5-3 Q.931 message information element names and functions (Sheet 1 of 3)

Message element name	Function
Bearer capability	Indicates information transfer ability, mode and rate
Call state	Indicates the following RDT or IDT call states: • null • call initiated • call present • connect request • call active • disconnect indication • release request • permanent signal
Cause	Indicates the cause for specified messages and provides diagnostic information.
Channel identification	Identifies a time slot in the interface that the Q.931 message controls.
Keypad facility	Sends signaling inputs to the user terminal that normally relate to information.
Note: The information elements that apply to CSC indicate the necessary additional call processing information to monitor a call or to set up calls. This condition does not include POTS calls.	

Table 5-3 Q.931 message information element names and functions (Sheet 2 of 3)

Message element name	Function
Notification indicator	Indicates the following line termination signaling information: • timed battery reversal • reverse battery • normal battery • negative loop mode • ground start mode • positive loop mode • timed negative coin check • timed positive coin check • timed negative coin control • timed positive coin control • coin ground • tip party ground • ring party • activate/deactivate message waiting lamp (Meridian Digital Centrex [MDC] 500/2500 sets only)
Note: The information elements that apply to CSC indicate the necessary additional call processing information to monitor a call or to set up calls. This condition does not include POTS calls.	

Table 5-3 Q.931 message information element names and functions (Sheet 3 of 3)

Message element name	Function
Signal	Indicates the following alerting information: • negative R ringing (POTS) • reminder ring • specific pattern A • specific pattern B • specific pattern C • specific pattern D • specific pattern E • specific pattern F • alerting off • loop reverse battery alerting • silent alerting (ISDN BRA)
Switch hook	Indicates when a customer goes on-hook and when a change in on-hook or off-hook state occurs.
Note: The information elements that apply to CSC indicate the necessary additional call processing information to monitor a call or to set up calls. This condition does not include POTS calls.	

Q.931 message descriptions

A description of each of the Q.931 messages appears in the following table. A list of the information elements that each message contains also appears in the table.

Table 5-4 Q.931 message descriptions (Sheet 1 of 3)

Q.931 message	Description	Information element
Alerting	The RDT sends this message to the IDT. This message indicates that alerting to the called party begins and the time switch connection occurs.	This message contains the channel identification information element. Channel identification applies when the alerting message is the first response to a setup message.
Call proceeding	The IDT sends this message to the RDT. The IDT sends this message when the IDT receives a setup message for a loop reverse battery signaling call.	This message contains the channel identification information element.

Table 5-4 Q.931 message descriptions (Sheet 2 of 3)

Q.931 message	Description	Information element
Connect	The RDT sends this message to the IDT. The message indicates a time slot connection occurs and the terminating party answers a call. The IDT also sends this message to the RDT when digit collection completes. The message indicates the IDT receives a complete network address. The RDT also sends this message when the RDT receives a setup message. The setup message has an alerting OFF pattern in the signal element.	The message contains the channel identification information element. This message occurs for the ISDN.
Disconnect	The IDT sends this message to the RDT when the IDT determines the call must clear. The RDT sends this message to the IDT to report the subscriber is on-hook.	This message contains the cause information element.
Information	The RDT or the IDT sends this message to indicate signaling information, addressing information and/or feature activation.	This message contains the information elements. The elements are keypad facility, switch hook and signal.
Notify	The RDT or the IDT sends this message to indicate signaling events on the customer line, like battery reversal. The RDT and the IDT also use this message to perform coin functions.	This message contains the notification indicator information element.
Release Release complete	The RDT or the IDT sends this message. The message indicates the equipment that sends the message disconnected the time slot. The message indicates the equipment intends to release all resources that associate with the call. The equipment that receives the message must release the time switch connection and all resources that associate with the call.	These messages contain the cause information element.
Release resources	The IDT sends this message to the RDT. This message requests that the receiver of the message break the time switch connection. This message also releases all resources that associate with the call.	This message contains the cause and signal information elements.
Setup acknowledge	The IDT sends this message when the IDT receives a response to a setup message. The message indicates a connection is present through the enhanced time switch. This message notifies the RDT of the port and channel the call uses.	This message contains the channel identification and notification indicator information elements.

Table 5-4 Q.931 message descriptions (Sheet 3 of 3)

Q.931 message	Description	Information element
Status	The IDT or the RDT send this message at any time during the call. The IDT or the RDT send this message when the IDT or the RDT receives a message. The IDT or the RDT do not expect this message. The IDT or RDT also send this message to report other conditions of the call.	This message contains the cause and call state information elements.
Status enquiry	The IDT or the RDT send this message at any time to solicit a status message from the receiver.	This message does not contain information elements.

EOC communication protocol

The RDT and the SMA use the EOC communications channel to communicate. Communication occurs over a dedicated DS-0 with the Q.921 LAPD protocol used on ISDN D-channels. The system transmits operations messages between the DMS SuperNode switch and the RDT. The EOC communications channel uses operations gateway (OGW) software. The EOC uses OGW to provide the protocol translation and routing abilities required to connect RDTs to operations entities. The OGW contains the following three elements:

- EOC protocol stack—provides the communications function
- applications router—provides the communications function
- operation entities—use this communication function

The OGW elements appear in the following figure. The text that follows this figure describes these elements.

Figure 5-10 OGW software functional elements

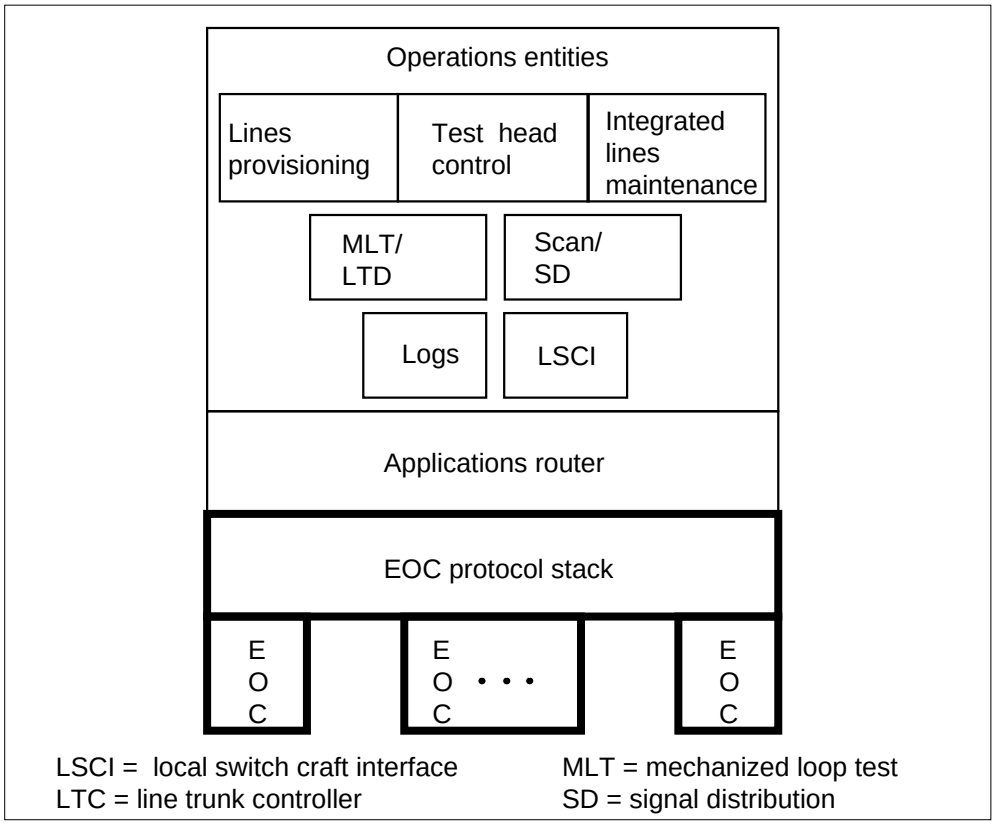

The EOC communication protocol contains the following four functional areas:

- physical layer. The physical layer is the physical DS-0 channel on the first DS-1 link between the local digital switch (LDS) and the RDT.
- data link layer. The data link layer uses LAPD protocol for processing between the LDS and the RDT.
- EOC protocol stack. The EOC protocol stack is a 3-layer communications protocol stack that communicates OAM&P information between the IDT and the SMA. A description of this stack appears later in this section.
- path protection switching. Path protection switching handles redundant messaging paths and the mechanism of switching activity between the paths.

These four functional areas perform common management information service element (CMISE) message transfers between the LDS software and the RDT. The relationship of these EOC communication protocol functional areas appears in the following figure.

Figure 5-11 EOC communication protocol functional areas

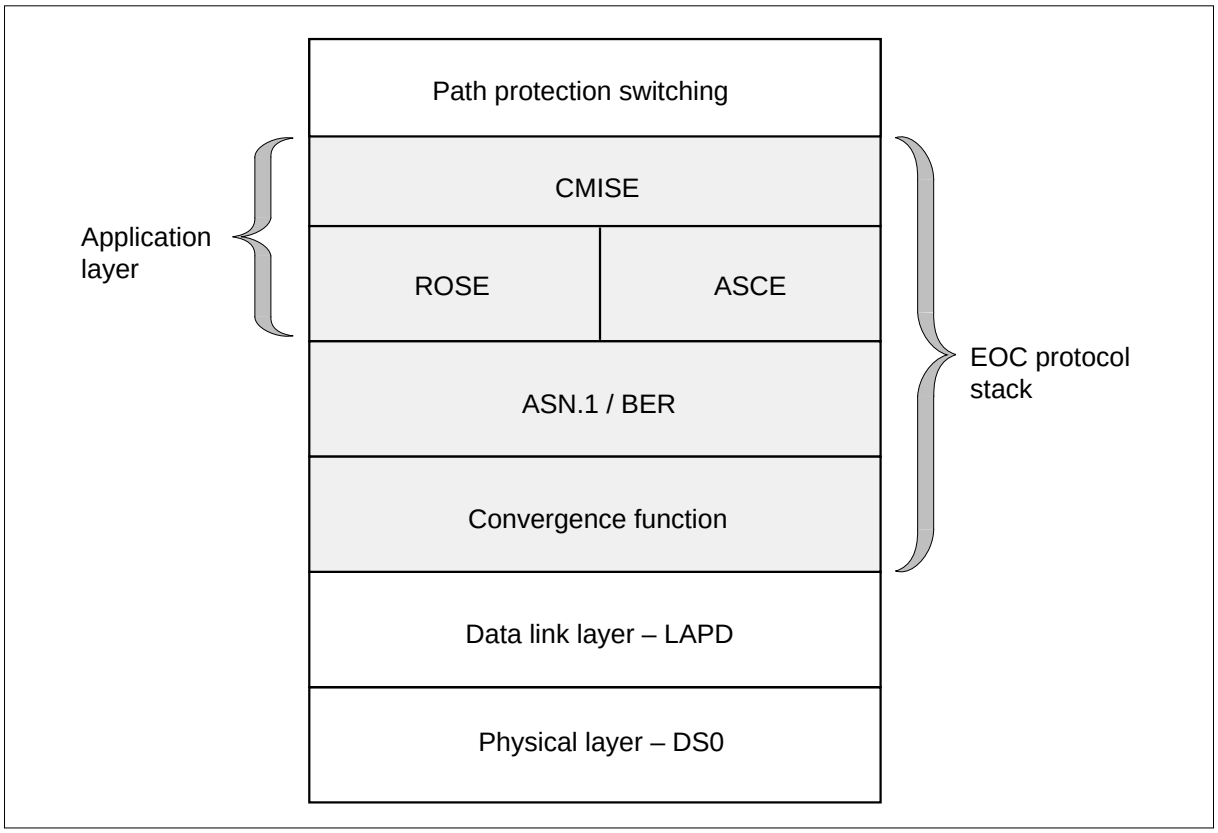

The coding and decoding of line test EOC messages occur in the SMA. These actions do not occur in the computing module (CM). The coding and decoding of the message in the SMA improves real time performance for line testing. The following functions require coding and decoding of line test EOC messages:

- metallic test access unit
- test response circuit
- metallic test access path termination
- analog line termination

EOC protocol stack

The EOC protocol stack is a 3-layer communications protocol stack. The EOC protocol stack communicates operations, administration, maintenance and provisioning information between the IDT, the SMA and the RDT. The EDC protocol stack uses the EOC communications channel. The EOC protocol

stack appears in the figure EOC communication protocol functional areas. The EOC protocol stack contains the following three layers:

- convergence function layer—performs the segmentation and assembly of application protocol data units (APDU). The convergence function layer performs the mapping between the services of the application and data link layers.
- application layer—contains the following functionalities that allow communication between two application processes:
  - — common management information services (CMISE). The CMISE exchanges information and commands to manage the SMA system.
  - — remote operations service element (ROSE). The ROSE supports communication between communicating application users.
  - — association control services element (ASCE). The ASCE controls application associations.
- abstract syntax notation one (ASN.1) layer—uses basic coding rules (BER), parses and formats messages from functional subcomponents

Applications router

The application router provides the internal connection between the operations entities and the EOC protocol stack.

Operation entities

Operations entities are DMS SuperNode applications or external devices. Operations entities are the source or end point of operations messages between the SMA and the RDT. These entities use the services of the EOC protocol stack to communicate over the EOC with the RDT.

The IDT software sends messages over the EOC to allow operations entities to perform OAM&P tasks. The following applications are not part of to IDT software but can communicate with IDT software:

- line provisioning, which controls the datafill of subscriber services
- line maintenance, which allows the user to control and monitor subscriber line states from the MAP terminal. Line maintenance also allows diagnostic tests of the lines.
- logs and alarms, which allow alarms and event reporting form at the MAP terminal and external operating systems
- node maintenance, which provides the control of voice and data channels between the CM and the SMA and RDT.

The IDT software communicates with an RDT over an LAPD channel.

DS30 protocol

The DS30 protocol is a half-duplex protocol used on DS30 or DS512 links. The DS30 protocol includes a message checksum for error detection.

The DS30 protocol is a form of handshaking protocol. Handshaking protocol is used for message transfer between nodes. This message transfer allows the nodes to inform each other of the current messaging condition. The following figure describes a normal form of handshaking protocol.

Figure 5-12 Handshaking protocol

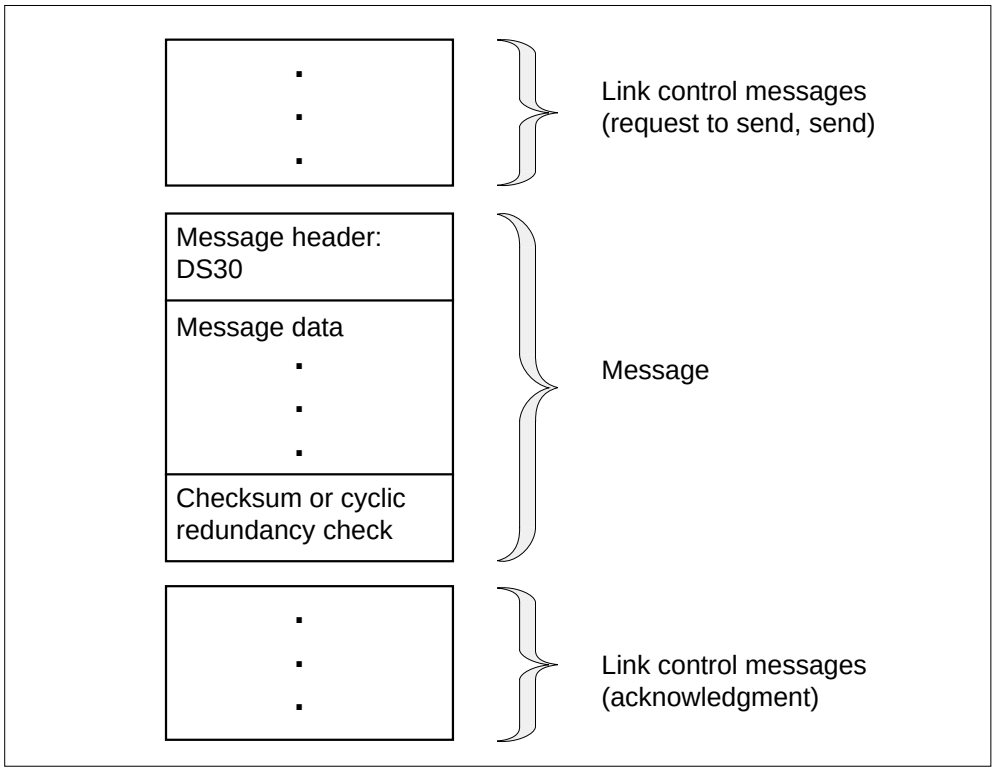

Message time-out and message checksum or CRC calculation perform message error detection. When a protocol, checksum or CRC fail on an outgoing message, the sending node attempts the send sequence again.

When an incoming message failure occurs, the sending node routes the message over an alternate control side (C-side) link. Hardware redundancies provide a minimum of one alternate paths to and from a node.

The system transmits DS30 message over a link. Link control messages precede and follow the message. Programs that run in the SMA and programs that run in the CM send messages between each other. Many software tasks or

processes communicate between each other through messages over the DS30 links.

The format of DS30 messages appears in the following figure.

Figure 5-13 DS30 message format

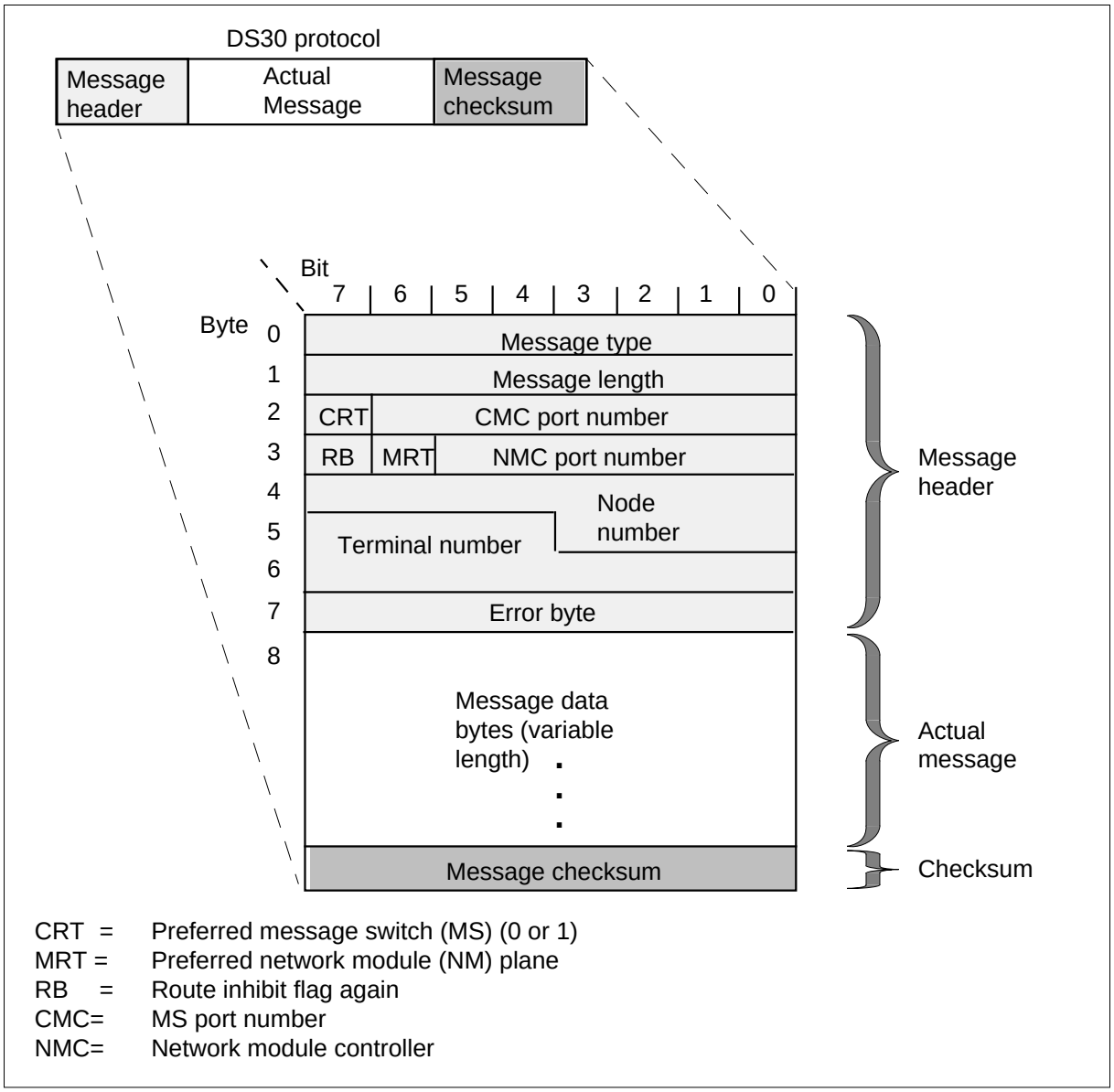

The DS30 message header is the first eight bytes as follows:

- The first byte specifies the message type:
  - — control, which is one byte in length
  - — start of message (SOM), for data
- The second byte specifies the total number of bytes in the message.
- The next two bytes specify the message route, and contain the following fields:
  - — CRT, to specify the required message switch (0 or 1)
  - — MRT to specify the required network plane

  Incoming messages use the CRT and MRT fields. The value of these fields is 0 for outgoing messages.
- The next three bytes contain the terminal identifier (TID). The TID identifies the destination node and terminal number for outgoing messages. The TID also identifies the origination node and terminal number for incoming messages.
- The last byte is the message checksum byte field. This field contains a checksum over all bytes in the message. The last byte detects transmission errors.

The number of bytes in the actual message or data can change.

ADSI protocol

Analog Display Services Interface (ADSI) allows application software to download softkey information to customer premise equipment (CPE). The ADSI provides two directional communication between the DMS SuperNode switch and a CPE. These functions require the ADSI protocol. The ADSI protocol uses standard dual-tone multifrequency (DTMF) signaling and standard modem based technology. The ADSI uses this technology to transmit caller_id information from a DMS SuperNode switch to a CPE.

The function of the SMA in ADSI protocol is message transfer agent between CM and the CMR circuit card. The SMA and CMR act together as an interface between CM application software and an ADSI compatible CPE. Messages sent to the SMA to support ADSI go to the CMR. The CMR sends the correct information to the CPE. The features that use the ADSI protocol are as follows:

- visual screen list editing (VSLE)
- call logging
- Deluxe Spontaneous Call Waiting Identification (DSCWID)

To support the ADSI protocol, the DMS SuperNode switch supports the following interfaces:

- the off-hook interface and protocol that TR-NWT-000030 (TR-30) define
- the ADSI interface and protocol that TR-NWT-001273 (TR-1273) define

The TR-1273 divides the ADSI protocol in three layers. The layers are the physical, data link and message layers.

Physical layer

The physical layer transmits the bit streams between the DMS switch and the CPE. The DMS SuperNode switch must be able to generate a voice band CPE alerting signal. The DMS SuperNode must also be able to receive standard DTMF signals from the ADSI CPE.

Data link layer

The data link layer provides data transmission between a DMS SuperNode switch and the CPE. This layer also checks for error detection and correction.

Message layer

The message layer controls the character set and data codes when data appears on the CPE.

Call processing

The SMA system can perform call processing through Q.921, Q.931 and DS30 protocols and CSC message signaling or TR-303 hybrid signaling.

Call processing can originate from the RDT. Call processing can also originate from distant users with terminated calls. The calls of the distant users terminate on an RDT subtending from the SMA. The SMA provides the translation in both conditions. The SMA translates between the Q.931 generic-based messages of the RDT and the DS30 message format the host understands.

Call processing (RDT to IDT)

The following call processing description traces the call from the RDT to the DMS SuperNode switch through the IDT. The POTS/COIN calls are the base of the calls. Call processing for ISDN calls can be different.

Time slot request

When the originating subscriber goes off-hook, the off-hook causes a loop closure. Current flows in the loop and exceeds a set threshold. The RDT line card detects this current. Coin calls made from coin first equipment have loop closure after the equipment receives a coin.

The RDT uses the CSC message channel to send a setup message to the IDT. The call initiates the call state. This message contains the call reference and bearer ability that associates with the subscriber line that is off-hook.

After the RDT sends the setup message, the RDT sets a timer. The RDT waits for a setup acknowledge or a release-complete message from the IDT. If the RDT does not receive a response in the specified time period, the RDT transmits the setup message again. If the RDT does not receive a response, the RDT sets a delay timer. The RDT continues to transmit setups. The RDT stops the transmission of setups when the IDT responds or the subscriber goes on-hook.

Channel selection

The IDT reserves an available channel for the call. The IDT sends this information back to the RDT in the setup acknowledge message.

When the IDT sends the setup acknowledge message, the IDT connects the call to the allocated channel. When the RDT receives the setup acknowledge message, the allocated channel connects to the line termination of the originating call.

When the connection occurs, the IDT sends dial tone over the connected channel. The call is now in an overlap sending state.

When channels are not available, the IDT sends a release complete message to the RDT. The message includes the reason specified in the cause information element. The IDT returns the call to a null state.

Sending addressing information

There are two methods of digit are collection. The subscriber loop uses dial pulse or dual-tone multifrequency dialing (DTMF). This decision determines the method of digit collection. The methods are as follows:

- If the RDT receives dial pulse input, the RDT sends an information message to the IDT with this address information. The RDT uses keypad facility information elements to perform this function.
- If the RDT receives DTMF input, the RDT sends this information to the IDT in-band. The universal tone receiver interprets this information.

The system sends addressing information to the computing module (CM) in the DMS SuperNode switch.

Tone generation

The CM receives the addressing information and determines the address is a valid number. The CM attempts to establish a channel for the call through the

network. When the CM establishes a channel through the network, the IDT sends a connect message to the RDT. The call is now active.

The CM can determine the addressing information is from a toll or coin line. When this condition occurs, the IDT sends a notify message to the RDT. The system codes the notification indication information element as reverse battery to indicate toll diversion. When the RDT receives this message, the RDT sends reverse battery on the subscriber line.

If the CM determines the addressing information is invalid, the channel remains open. If the CM cannot establish a connection through the network, the channel remains open. The open channel allows the DMS SuperNode switch to provide in-band call progress information to the subscriber. Reorder tone is an example of in-band call progress information.

The message and tones card in the SMA generates dial tone. The time switch card switches the tone to the correct DS-1 channel. The enhanced ISDN signaling pre-processor (EISP) card directs this change. If the called line is busy, the message and tones card generates a busy tone. The system sends this tone to the originating party. Originating subscribers can receive other treatments, like reorder tone and announcements. Conditions present at the time the caller places the call determine the treatments.

Call disconnection

The IDT and RDT monitor the call for new messages at all times. In a system with the flash off, an end can go on-hook without flash detection for 250 ms or more. When this condition occurs, the system sends a disconnect message to the far end. This procedure releases the time slot and call reference. With flash on, the on-hook signaling bit pattern must continue for a minimum of 1200 ms. This condition allows the IDT or RDT to send a disconnect message. The system sets a timer at the disconnect-message end at the same time. If the IDT started call clearing, the call enters the disconnect indication state. If the clearing began at the RDT, the call enters the disconnect request state.

In response to this message, the far end sends a release message. This message indicates the release of the time slot and call reference. A timer is set at release-message end. When the far-end receives the release message, the system connects the disconnect-message end timer. The far-end sends a release complete message to the other end. This procedure indicates that the time slot and the call reference are released for future use.

Release messages are not always received before the disconnect-message end timer expires. When this event occurs, the end that sent the disconnect message sends a release message and sets a timer. Release complete messages are not always received before this new timer release-message end expires. When this event occurs, the system sends a second release and starts the timer

again. If a response to the second release does not occur, the system releases the call reference and time slot.

Flash detection

If flash is on and an off-hook subscriber goes on-hook, then off-hook, the system handles the condition as a problem. The subscriber is on-hook for a maximum of 250 ms. The call connection remains. The subscriber can go on-hook for 250 ms or 360 ms and go off-hook before 1200 ms expire. The system handles the sequence as a flash 1200 ms after the subscriber first goes on-hook.

The system uses dial pulse and DTMF at the RDT to detect a flash on lines. The system uses the keypad facility information element to code a flash to an information message. The system sends information message to the IDT and processes the message while the call remains in an active state.

If the caller subscribes to call transfer or three-way calling, the RDT sends the same information message. The RDT sends the message when the system detects a flash. The system places the call in an overlap send state to allow for additional digit collection. The message exchange as the second call is the same to set up a simple end-to-end call. After the call reaches the second party, the IDT receives a second flash information message. The system transfers or bridges the call.

The system can also detect a flash in the overlap send state when a subscriber activates features. These features do not require the establishment of a call. Call forward is an example of a feature the subscriber can active.

Busy service of subscriber lines

The CM can direct the SMA to busy a subscriber line. This action prevents call processing on the subscriber line. This action runs during maintenance, for example, when a MAP command is entered from the LTP level to test a line.

Call processing (IDT to RDT)

The following call processing description traces the call from the DMS SuperNode switch through the IDT to the RDT. The POTS/COIN calls provide a base for this description. Call processing on ISDN calls can be different.

Time slot request

The IDT uses the CSC message channel to send a setup message to the RDT. The call is in a call present state. The setup message contains the call reference and bearer ability that associates with the subscriber line that originated the call. The setup message also contains channel identification and can include the signal information element.

When the IDT sends the setup message, the IDT sets a timer. The IDT waits for a call proceeding, alerting or releasing a complete message from the RDT. If the IDT does not receive a response in the specified time period, the IDT transmits the setup message again. If the IDT does not receive the response again, the IDT releases the call reference and channel. The IDT sends a release complete message to the RDT. The message specifies the cause of the release in the cause information element. The IDT returns the call to a null state.

Network busy call treatment

If the network is busy, the message and tone card in the SMA generates a reorder tone to the originating party.

Channel selection

In the setup message, the IDT uses the channel identification information element to indicate the channel to use for call connection. If the channel is not available, the RDT sends a release complete message back to the IDT.

If the channel is available, the RDT responds with an alerting message or connect message. These messages contain a channel indication information element. The channel indication information element confirms the channel that the IDT reserves for the call.

If the called line is busy, the message and tone card in the SMA generates a busy tone. The system sends this tone to the originating party.

Alerting

The RDT can receive the setup message with alerting information coded in the signal information element. When this condition occurs, the RDT returns the alerting message to the IDT. An alerting message indicates the system alerts the called party. The call is in the call received state. When a called line rings, the originator receives a ringback tone.

The SMA supports the single-party alert cadence. Ringing abilities include single-party 20 Hz ringing and distinctive ringing for Meridian Digital Centrex (MDC).

The SMA-supported ringing cadences appear in the following table.

Table 5-5 SMA-supported ringing cadences (Sheet 1 of 2)

	Ringing cadences (in seconds)					
Ring types	**On**	**Off**	**On**	**Off**	**On**	**Off**
single party	2	4				
distinctive 1	1.5	4.5				

Table 5-5 SMA-supported ringing cadences (Sheet 2 of 2)

	Ringing cadences (in seconds)					
Ring types	**On**	**Off**	**On**	**Off**	**On**	**Off**
distinctive 2	1.5	.5	1.5	1.5		
distinctive 3	1.5	.5	.5	3.5		
distinctive 4	1.5	.5	.5	.5	.5	2.5
distinctive 5	1.5	.5	.5	.5	1.0	2.0
distinctive 6	1.0	.5	1.0	3.5		
distinctive 7	.5	.5	.5	.5	1.0	3.0
distinctive 8	.5	.5	1.0	.5	.5	3.0

When the called subscriber goes off-hook, the RDT detects the change in the line current. The RDT sends a connect message to the IDT. This message triggers the ringing. The call is now active.

On-hook transmission

On-hook transmission allows the network to transmit information to the called subscriber. Calling number delivery (CND) is an example of this information. Calling number delivery is an example of an on-hook transmission service that occurs with a terminating call. Other on-hook transmission services, like message delivery, do not occur with call terminations.

Custom local area signaling service (CLASS) calling number delivery (CND)

If the RDT receives a setup message, the RDT sends an alerting message. The call is in the call received state. The system delivers the calling number during the first silent ring cycle.

When the called subscriber goes off-hook, the RDT detects the change in the line current. The RDT sends a connect message to the IDT. This procedure triggers the ringing. The call is now active.

Loss padding

Padding or attenuation of pulse code modulation (PCM) samples occur in the ring/pad card. The PCM samples compensate for expected signal loss through the network. The CM requests the SMA to apply padding to specified lines. The ring/pad card in the SMA provides the padding and the enhanced time switch circuit card. The NTAX74AA cellular access processor (CAP) circuit card directs these procedures. The ring/pad card introduces the padding to the channels.

Call disconnection

The IDT and RDT monitor the call for new messages at all times. If flash is off and an end can goes on hook for a minimum of 250 ms, the system sends a disconnect message. The system sends the disconnect message to the far end. This message allows a release of the time slot and call reference.

With flash on, the on-hook signaling bit pattern must continue for a minimum of 1200 ms. This condition allows the IDT or RDT to send a disconnect message. The system sets a timer at the disconnect-message end at the same time. If the IDT started call clearing, the call enters a disconnect indication state. If the clearing began at the RDT, the call enters a disconnect request state.

In response to this message, the far end sends a release message. The release message indicates the release of the time slot and call reference. The system sends a timer at the release-message end. When the far end receives a release message, the far end stops the disconnect-message end timer. The far end sends a release complete message to the other end. The release complete message indicates that the time slot and the call reference are available for use.

The far end does not always receive a release message before the disconnect message end timer expires. When this event occurs, the end that sent the disconnect message sends a release message and sets a timer. If the far end does not receive a release message, the end that sent the disconnect message sends another release message. This event occurs if the far end does not receive a release before the timer expires. If a response to the second release does not occur, the system releases the call reference and time slot.

Flash detection

If flash is on and an off-hook subscriber goes on-hook then off-hook, the system handles the condition as a problem. The subscriber is on-hook for a maximum of 250 ms. The call connection remains. A subscriber can go on-hook for a minimum of 360 ms and go off-hook before 1200 ms expires. When this condition occurs, the system handles the sequence as a flash, 1200 ms after the subscriber goes on-hook.

The system uses dial pulse and DTMF to detect a flash on lines. The IDT processes the flash when the call remains in an active state.

If the caller subscribes to call transfer or to three-way calling, the call in an overlap send state. This condition allows for additional digit collection. The message exchange to set up the second call is the same as to set up a simple end-to-end call. After the call reaches the second party, the IDT receives a second flash. The system transfers or bridges the call.

Busy service of subscriber lines

The CM can direct the SMA to have an RDT busy a subscriber line. This action prevents call processing on the subscriber line. This action normally occurs during maintenance. An example of maintenance is a MAP command entry from the LTP level to test a line.

Call processing coin operation

Coin commands

The commands for call processing coin operation are as follows:

- coin collect
- coin return
- coin presence
- coin partial presence (used in local coin overtime)

Coin collect

This command directs a coin first (CCF) or coin dial tone first (CDF) telephone to collect money deposited for a telephone call. Deposited coins go to the hopper first. The hopper is a temporary holding location to store money before coin collect or coin return. When the system receives coin collect command, the coins drop from the hopper to the coin vault.

On coin telephones that require a flat rate, the system collects the coins when the call completes. On coin telephones that connect to a switching system that supports local coin overtime (LCO), the system collects the coins every few minutes.

Coin return

After the calling party deposits the money, a coin return command can direct the coin telephone to return the deposited money. This procedure occurs when the calling party on a coin telephone hangs up before the terminating party answers.

When channel assignment occurs and the system cannot assign the call again, the system drops the call for a higher priority call. If the system cannot connect a call because all channels are busy, the system sends a coin return message.

Coin presence

This command directs CDF telephones to check for deposit or stuck coins. This command also allows CCF telephones to check for stuck coins.

An operator processes long distance calls on CCF and CDF telephones. The operator monitors tones that the telephone station generates according to coins deposited.

Coin partial presence

This command works with CCF and CDF telephones when CCF and CDF support LCO. The coin partial presence test checks for coins deposited after the first deposit.

Battery commands

In addition to the coin commands, the CM can send or instruct the RDT to send reverse battery and normal battery.

Reverse battery

All types of coin telephones use this command. This command prevents communication between the calling and called parties. This command also performs the following functions:

- reset the telephone totalizer, an electromechanical device that totals initial rate deposits
- prepare a telephone station for calling
- signal coin denominations to the operator

Normal battery

This command allows the talking state. Some CDF and CCF telephones also use this command to reset the totalizer.

Subscriber line signaling

If the subscriber lines subtending the RDT use in-band tone multifrequency analog signaling, the SMA transports these coin commands.

Changes to the electrical condition on the loop (metallic signaling) can cause signaling on the subscriber lines subtending the RDT. When this condition occurs, the IDT must translate these coin commands to notify messages. These messages contain the notification indicator information element.

When the RDT receives the notify messages from the IDT, the RDT applies voltages. The RDT can also open to the tip and ring of the line. These electrical signals applied to the tips and rings of coin telephone lines cause the coin station to start actions. These actions include the return of a deposit to a station user or deposit collection.

Coin operations limits and interactions

The following limits apply to coin functions. Coin telephone calls, like all calls, cannot start during a warm SWACT or call processing (CP) switchover. This action cannot occur because messaging between the SMA and RDT does not occur.

Note 1: If a DS-1 link fails, the system causes channel reassignment. A coin line call can occupy a channel on the defective link and cannot be

assigned again. When this condition occurs, the SMA sends a coin return message to the RDT. The telephone station user receives the deposited money.

Note 2: When a warm SWACT occurs, any call that just entered the talking state cannot add to the records of the new active unit. The system drops the call. The system returns deposited money to the telephone station user after the user originates again and hangs up.

SMA service capabilities

This section describes the services the SMA supports. Switched services terminate on the SMA. Tandem DS-1 links at the RDT control nonswitched and nonlocal switched services.

Plain ordinary telephone service (POTS)

The SMA supports plain ordinary telephone service (POTS) single-party flat rate and single party multi-rate.

Coin operation service

The SMA supports the following three types of coin calls:

- coin first (CCF)
- coin dial-tone first (CDF)
- coin semi-post pay (CSP)

Coin first

Coin first (CCF) service requires the pay station telephone to be off-hook. The CCF service also requires the calling part deposits the money before the DMS SuperNode switch provides the station dial tone.

For CCF telephones, the calling party must deposit the correct coinage before the RDt can detect the off-hook.

The IDT sends a notify message with timed positive coin check information coded in the notification indicator information element. When the RDT receives this message, the RDT signals the coin station to check for the coin deposit.

The IDT sends a notify message with ground start mode information coded in the notification indicator information element to the RDT. When the RDT receives this message, the RDT sends reverse battery on the line. This action causes the coin station to home the coin station totalizer. The coin station reports on the coins that the station collected.

If the caller deposited the correct coins, the RDT sends the IDT a notify message. This message contains coin ground information in the notification

indicator information element. This information informs the CM that the caller deposited a coin.

The IDT sends an information message with negative ring information coded in the signal information element to the RDT. This message allows the calling party in the coin station to receive ring-back. If the called party is on the telephone, the IDT sends a disconnect message. The IDT also sends an information message to allow ring-back.

If the call is a number that does not require toll, the IDT sends a notify message. The message has timed negative coin control information coded in the notification indicator information element. When the RDT receives this message, the RDT signals the coin station to return the deposited coins.

For toll calls, coin functions only occur when the CCF line goes on-hook. When the call is complete, the IDT sends a notify message. This message has timed positive coin control information coded in the notification indicator information element. When the RDT receives this message, the RDT signals the coin station to collect coins.

Coin dial-tone first

For coin dial-tone first (CDF) service, the DMS SuperNode switch provides dial tone when an off-hook condition occurs at the station. The call proceeds if the calling party deposits the correct amount of money by the end of dialing.

When a call occurs from a CDF telephone, the CM requests information about a coin deposit. The IDT sends a notify message that contains a coin presence request in the notification indicator information element. When the caller deposits a coin, the RDT sends the IDT a notify message. The notify message contains coin ground information in the notification indicator information element. This information informs the CM that the caller deposits a coin.

If the call is to a number that does not require toll, the IDT sends a notify message. The message has timed negative coin control information coded in the notification indicator information element. When the RDT receives this message, the RDT signals the coin station to return the deposited coins.

When the call completes, the IDT sends a notify message. This message has timed positive coin control information coded in the notification indicator information element. When the RDT receives this message, the RDT signals the coin station to collect coins.

Coin semi-postpay

For coin semi-postpay (CSP) service, the DMS SuperNode switch provides the following services:

- provides dial tone
- allows dialing
- connects the station caller with the called party

The DMS SuperNode switch does not allow talking until the caller deposits money.

The IDT sends a notify message with positive loop mode information coded in the notification indicator information element to the RDT. When the RDT receives this message, the RDT sends reverse battery on the line. This action causes the coin station to home the coin station totalizer. The coin station reports on the coins the station collected.

The CSP lines do not use coin collect, coin return or coin presence tests. The CSP lines use only reverse battery. Reverse battery allows an originator to hear the terminating party when applied. Reverse battery does not allow the terminating party to hear the originator.

If the caller deposits the correct coins, the system applies normal battery. This condition allows the caller to hear the called party.

When the system establishes a channel, the system sends the dial tone and collects digits. The CM of the DMS SuperNode switch sends commands to the RDT. The commands control and monitor the collection of coins.

Coin call functionality

The CCF, CDF and CSP telephones use many coin call messages when these telephones process coin calls. The CCF telephones use ground start. The CDF

and CSP telephones (applies to S/DMS AccessNode only) use loop start. The following list describes ground start and loop start messages:

- Ground start telephones require an initial deposit before dial tone occurs.
- Loop start telephones allow the caller to receive dial tone without a deposit. Loop start telephones do not require a deposit. Loop start telephones do not charge the caller for the following calls:
  - — special assistance calls. These calls are n11 calls, like 911 and 411.
  - — inward wide area telephone service (INWATS)
  - — operator assistance calls
- The CCF telephones process these calls without charge after the caller deposits a coin. When the call reaches the called party, the telephone returns the coin.

Custom calling features for Meridian business sets (MBS)

The SMA-S/DMS AccessNode subsystem provides the following custom calling services for MBS:

- Speed Calling
- Call Waiting
- Three-way Calling
- Directory Numbers (DN)
- Automatic Answer Back
- Automatic Dial
- Automatic Line
- Busy Override
- Call Back Queuing
- Call Park
- Call Pickup
- End-to-End Signaling
- Group Intercom
- Individual Business Line
- Intercom
- Listen on Hold
- Make Set Busy
- Malicious Call Hold
- Multiple Appearance DN

- On-Hook Dialing
- Privacy Release
- Ring Again
- Three-Port Conference
- Thirty-Port Conference
- Called Number Display
- Calling Number Display
- Query Time Key
- Display Key
- Call Forwarding

Message waiting indicator

The message waiting indicator allows subscribers to have several messages stored against a station in the DMS SuperNode switch. This feature also allows subscribers to have several messages stored at a message center. The message waiting indicator activates when a message queues against the station of the subscriber.

Message waiting lamp

The message waiting lamp feature is available only on S/DMS AccessNode. This feature indicates that a request by another station requires response. The request type can be message waiting or call request. To activate the message waiting lamp, the IDT sends a notify message. This message has the notification indicator element coded to Turn On Lamp to the RDT. To deactivate the message waiting lamp, the IDT sends a notify message. This message has the notification indicator element coded to Turn Off Lamp to the RDT.

Meridian business set messaging

The MBS is a Northern Telecom (Nortel) product that normally connects to a line concentrating module (LCM). The DMS SuperNode switch and MBS use a proprietary protocol when the switch and MBS communicate.

The CSC uses the protocol in which #4F (hex) indicates nonproprietary messages and different message types. To allow proprietary communication over the CSC for an MBS, the CSC uses #FA. The #FA is a different protocol discriminator. When a message indicates a proprietary message, the message type indicates the type of service offered. The message type for an MBS is #7F.

The SMA uses this proprietary protocol discriminator and message type to support the MBS communication. This MBS communication is the same used

when the MBS is configured from an LCM. The MBS supports the same feature set.

Universal tone receiver services

A universal tone receiver (UTR) circuit pack (NT6X92BB) must be provisioned in slots 6 and 22 in the SMA. Additional UTRs can be provisioned in slots 7 and 21. The UTR card provides a dedicated channel for digit collection during call setup. This procedure unloads the network from part of call set up. Datafill the UTR card in table LTCINV to activate the UTR feature on the SMA. Refer to the *Translations Reference Manual* for more information.

Direct Outward Dial (DOD)

A feature that allows the private branch exchange (PBX) or Centrex station user to access the exchange network without attendant assistance.

Custom local area signaling service

The SMA subsystem supports CLASS features when the optional CMR card is provisioned. Calling number delivery (CND) is a CLASS feature. This feature allows single-party subscribers and Meridian Digital Centrex (MDC) customers to receive the following information. This information includes the number, time and date of call of the incoming calling party on the customer premises equipment (CPE).

If the operating company requires that lines off the RDT have CND, the following requirements apply:

- A CMR card (NT6X78AB) must be in the SMA. This card transmits the CND data.
- Data entry for the CMR card must occur in table LTCINV. Refer to the *Translations Reference Manual* for additional information.

Meridian Digital Centrex (MDC) features on 500/2500 sets and attendant consoles

The SMA configuration supports all current MDC features. The SMA does not support trunks. The MDC features that require trunks cannot terminate on the SMA.

The SMA supports Meridian Feature Transparency (MFT). This feature monitors the requirements of Meridian Business Set (MBS) users that want to use ISDN loop technology. These MBS users want to keep some MDC features that ISDN BRA terminals do not offer.

Multiple appearance directory number (MADN) feature

The SMA supports the MADN feature. The MADN feature associates a single directory number to a group of line appearances in a customer group. The following MADN arrangements can occur:

- Multiple call arrangement (MCA) allows each group member to be active with different group members.
- Single call arrangement (SCA) allows only one member in a group to be active at any time.
- Multi-bridged arrangement (MBA) allows only one call to be active in a group at any one time. This feature allows other group members to bridge to the call.
- Single bridged arrangement (SBA) allows the set up of only one call with an external party. This feature also allows one other member to bridge to the call.
- Extension bridging (EXB) allows the set up of only one call with an external party. This feature allows any other group member to bridge in the call for a three-way conference call.

MADN members provisioning

The MADN members provisioning rules for the SMA with an S/DMS AccessNode appear in the following table.

Table 5-6 SMA to S/DMS AccessNode MADN members provisioning rules (Sheet 1 of 2)

Parameter	Value	Meaning
Switch average members for each MADN group	4	This value is the engineering guide for the total number of MADN members on a DMS SuperNode switch. This value is also the guide for the number of MADN groups on a DMS SuperNode switch.
Maximum number MADN members/group assigned for each S/DMS AccessNode	16	This value is the engineering limit for the maximum number of MADN members in one MADN group on an Accessnode shelf.
Maximum number MADN members/group assigned for each S/DMS AccessNode	16	This value is the limit for the number of MADN members in a single group. These MADN members can be assigned to that group on an AccessNode.
Note: Entry of the maximum number of MADN members assigned for each group occurs in table OFCENG in field MAX_MADN_MEMBERS_PER_LSG.		

Table 5-6 SMA to S/DMS AccessNode MADN members provisioning rules (Sheet 2 of 2)

Parameter	Value	Meaning
Maximum number MADN members/group assigned for each SMA	16	This value is the engineering guideline for the maximum number of members in one MADN group. These members are lines off one or more AccessNode on the same SMA.
Maximum number MADN members/group assigned for each group	32	This value is the limit for the number of members assigned to one MADN group.
Note: Entry of the maximum number of MADN members assigned for each group occurs in table OFCENG in field MAX_MADN_MEMBERS_PER_LSG.		

Off-premise extension (bridged service)

The SMA configuration uses the MADN feature to support a connection between a remote extension station to a main station line.

Private branch exchange (PBX) central office access

The SMA configuration supports connection of PBX to a central office that normally serves the PBX location. A station can receive calls through the attendant who directs the call to a station.

The station user can originate calls outside the PBX in two ways. The user can access the attendant that connects the station to an access line. The station user can pass the attendant and dial an outside number directly. This action requires the direct outward dial (DOD) facility.

Residential services

The SMA supports residential services that include features normally available with plain old telephone service (POTS). The SMA also supports additional line features that only the MDC lines made available. The SMA includes the essential line (ELN) services feature.

Secretarial line

The SMA supports secretarial lines. A secretarial line provides an answering service when the called party cannot take calls. Called party lines are bridges to the secretarial line.

Teen service

The SMA supports teen service. Teen service provides multiple directory numbers for the same line. Multiple directory numbers has a different ringing pattern.

Toll diversion

The SMA supports toll diversion. Toll diversion allows a PBX to block some station-to-station calls beyond a limited area.

Wide area telecommunications services

The SMA supports wide area telecommunications services (WATS). The SMA allows a specified number of toll calls in a specified geographical area to a subscriber at a fixed monthly rate. The WATS lines can provide the following:

- incoming service (INWATS)
- outgoing service (OUTWATS)
- incoming and outgoing service (two-way WATS)

800 service

The SMA configuration supports 800 services. With 800 services, the called party subscribes to the service. The called party pays for the toll calls made to a specified number. Offices configured with SSP also support enhanced 800 service switching point (SSP) services.

ISDN services

An ISDN provides voice and data services. The ISDN provides these services through one or more NTBX02BA enhanced D-channel handler (EDCH) circuit cards. The ISDN also provides these services through an NTBX01AC enhanced ISDN signaling pre-processor (EISP) circuit card.

The ISDN voice services follow:

- plain old telephone service (POTS)
- electronic key telephone service (EKTS)
- direct outward dial (DOD)
- network class of service
- call forwarding
- call pickup
- automatic callback (ring again)
- call hold and additional call offering (call waiting)
- flexible calling
- hunt groups
- calling-line id
- busy override
- authorization codes

The ISDN data services follow:

- circuit-switched data
- packet-switched data

Note: The SMA does not support digital trunking or primary rate access (PRA).

Ringing

The SMA supports the following ringing:

- single party (DMS Ring Code 0; TR-303 Code 40)
- distinctive, for MDC (DMS Ring Codes 1-8; TR-303 Code 42, 44 and 71-76)
- multiparty fully selective
- coded
- superimposed
- teen
- revertive
- immediate

Dialing

The following dialing codes are interpreted:

- dial pulse
- dual-tone multifrequency dialing (DTMF)

Tones

The following tones are available:

- dial tone
- receiver off-hook
- audible ringback
- reorder
- busy

SMA line card support

The SMA supports the following S/DMS AccessNode line cards:

- Omega Service Adaptive (SAA) software-controlled line card. Many subscriber switched services use this card. This card uses SERVORD to

allow flow-through provisioning of locally switched AccessNode RFT lines.

- Epsilon Line Card. This card is a cost-effective option for users that do not require all the functionality that the Omega card provides. This card is not service adaptive. This card supports Loop Start Residential Services but does not support message waiting lamp notification.

Deluxe Spontaneous Call Waiting Identification

Deluxe Spontaneous Call Waiting Identification (DSCWID) provides an interface to CPEs compliant with Bellcore specification TR-416. The DSCWID is a CLASS feature that allows a subscriber to perform the following functions:

- receive caller identification (CID) information from a call that waits for connection, when the subscriber is off-hook
- control incoming calls while an off-hook stable call is present

Bellcore TR-416 describes the requirements for DSCWID and specifies how this feature interfaces with the following sets:

- ADSI set—a screen based ADSI CPE that can display options.
- SCWID set—a non-ADSI CPE that can deliver CID data.
- 2500 set—a non-ADSI CPE that can signal DTMF but cannot deliver off-hook CID data.

The SMA requires the NT6X78AB, NT6X69AD and NT6X92BB or EA cards to comply with ADSI protocol to support the DSCWID feature. The ADSI protocol supports CLASS features that provide display-based information like DSCWID to subscribers with ADSI-compatible CPE. The cards perform the following functions:

- The NT6X92BB or EA UTR card identifies and processes tones for channels on the parallel speech bus.
- The NT6X78 CLASS modem resource (CMR) card supports calling number delivery (CND) and other CLASS services. The CMR card provides the ADSI protocol to transmit CLASS data between the CC and ADSI compliant CPE.
- The NT6X69AD tone ROM card contains the ADSI tone as TR-30 defines.

The CM sends tones to alert the DSCWID subscriber of an incoming call and to alert the CPE of incoming caller data. The CM provides one of two types of alerting signals or tones when the following event occurs. A line with the DSCWID option has a call established and a second call attempts to terminate to that line. The first type of signal is the subscriber alerting signal (SAS). The second type of signal is an SAS followed by a CPE alerting signal (CAS). The

subscriber recognizes the SAS tone as the call waiting tone (CWT). The CAS alerts the CPE of incoming data if the subscriber line also has the CID feature.

The DSCWID CPE generates an acknowledgement (ACK) tone to indicate the CPE can receive DSCWID data. The UTR circuit card in the SMA collects the ACK tone. If the CPE is ADSI compatible, the system sends a DTMF A ACK signal to the CAS. Examples of responses from an ADSI-compatible set appear in the following figure.

Figure 5-14 Example of a DSCWID call on an ADSI set

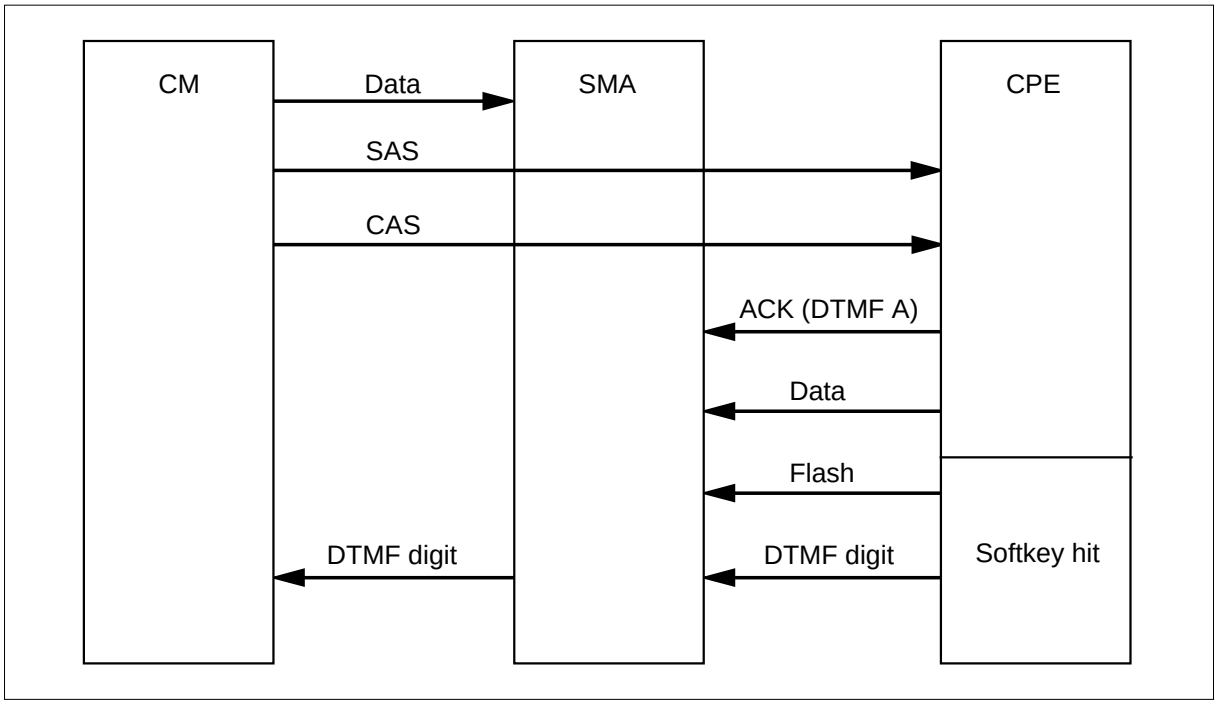

If the CPE is a SCWID CPE, the CPE sends a DTMF D ACK signal in response to the CAS. When the CPE sends alert tones, the subscriber can control the incoming call. The subscriber uses the CPE softkeys to respond if the CPE is ADSI. The subscriber uses hard-coded keys to respond if the CPE is a SCWID, or a 2500 set. If the CPE does not respond with an acknowledgment tone, the subscriber handles the CPE as a 2500 set. Examples of responses from a SCWID set and a 2500 set appear in the following figures.

Figure 5-15 Example of a DSCWID call on a SCWID set

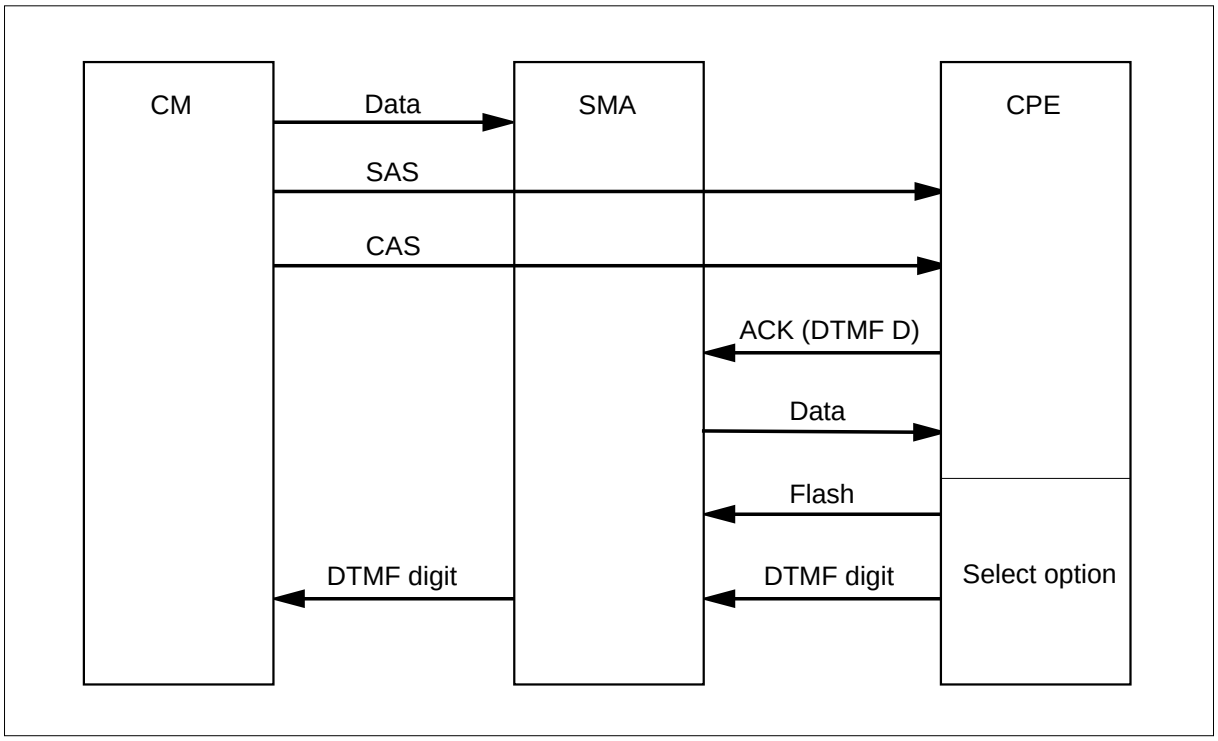

Figure 5-16 Example of a DSCWID call on a 2500 set

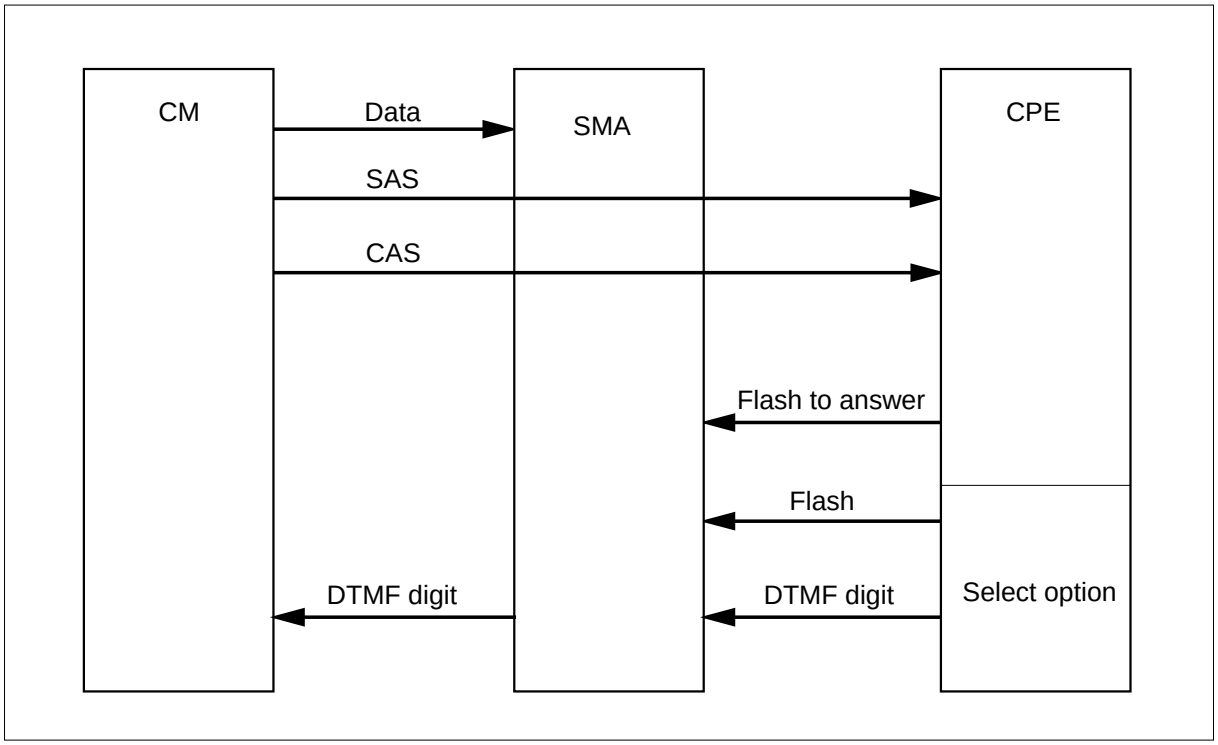

The system sends alerting signals to the CPE even when a UTR channel is not available. When UTR channels are not available, the CPE does not receive data. The following is a requirement for Bellcore compliancy. The DMS SuperNode switch must provide options when the switch detects a flash and the switch cannot attach a UTR. The SMA complies with this requirement and sends a flash to the CM. This action occurs when the SMA cannot attach a UTR in 400 ms. If the first notification of an incoming call is not acknowledged in 10 s, the system sends a second alerting signal. Transmission of display data to the CPE requires enough available UTR channels. If this condition does not occur, the system holds the data. The system sends the data again when re-alerting occurs.

When the SMA receives a flash signal from the ADSI compatible CPE of the customer, the SMA starts a T-tone timer. The T-tone timer monitors the time allowed between the process to send a flash and the DTMF digit on an ADSI set. The timeout is 600 ms, during which the system mutes the speech path. The T-tone timer starts for the initial option selection during a DSCWID call. The CPE type does not affect this function. The ADSI DSCWID option selections that follow also start the T-tone timer.

The DSCWID option selections that follow on a SCWID or 2500 set use a T-flash timer. The options use a T-flash timer after a call is answered with SCWID and 2500 sets. This timer provides the customer with enough time to select an option after a flash. The SCWID or 2500 sets use the T-flash timer. Use of the T-flash occurs because the subscriber does not have enough time to flash and dial a DTMF digit in 600 ms.

The operating company can set the T-flash timer from 1 to 8 s. The default is 1.5 s. The SMA starts the T-flash timer if the NONADSI field in table DSCWDTYP is set to Y. The SMA receives a flash signal from a customers SCWID or 2500 set during the held or conference call state. The SMA must monitor the DSCWID call state and the type of CPE. The timer depends on this information. If the SMA cannot attach a UTR before 400 ms, the system applies the RETURN option.

The CM attempts to maintain synchronization with the CPE at all times. This close supervision prevents the following condition. The CPE believes the CPE performed a function, but the DMS SuperNode switch does not process the option based on the call state. The DSCWID call waiting disposition options are:

- answer the new call and place the current call on hold
- disconnect the current call and answer the new call
- forward the new call
- connect the new call to a busy announcement

- place the new call on hold after the DSCWID connects to a hold announcement
- conference the new call with the current call

The following figure describes the action between the ADSI set dispositions.

Figure 5-17 DSCWID with ADSI set dispositions

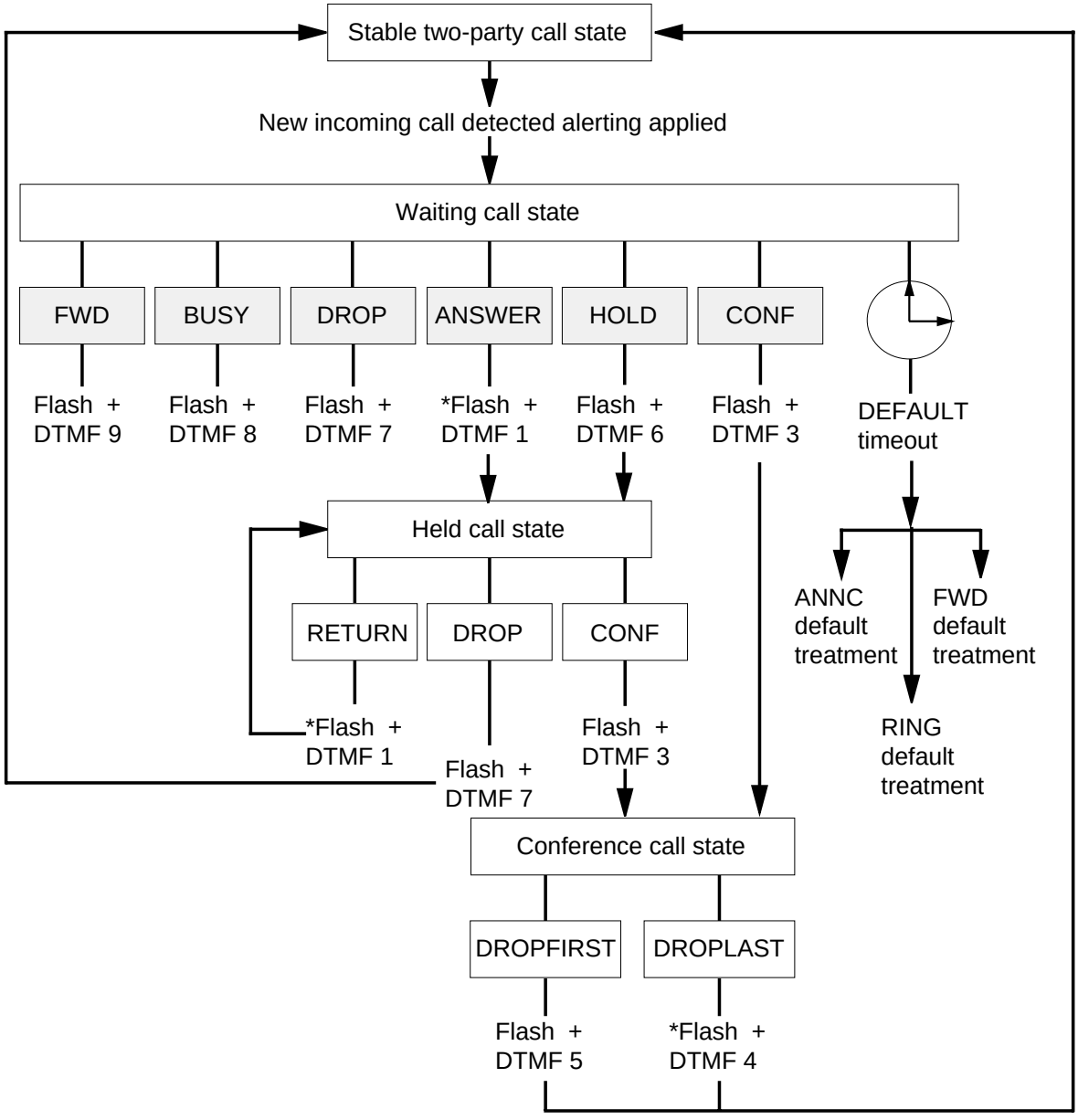

Note 1: An * indicates a flash can occur to perform the same function as transmission of the DTMF code for that digit.

Note 2: Dispositions are available if NONADSI = Y in table DSCWDTYP for the given DSCWID type. This condition occurs if a non-ADSI set is configured for hard-coded keys to perform DSCWID dispositions. This condition occurs if the subscriber provides a DTMF-digit in 600 ms.

Preparing to datafill SMA

PCL—New software delivery vehicle

After BCS36, Nortel will deliver Product Computing-Module Loads (PCLs). Nortel will not deliver BCS releases or Universal Software Loads (USLs).

A PCL contains features selected from the development stream software product for a specified application in a specified market. The PCL contains abilities that many related NTX packages shared earlier. An eight-digit ordering code replaces the NTX package codes.

The ordering code and functional group name required for the SMA appear in the following table. A list of the former NTX package that is in the functional group also appears in the table. This ability associates with the SMA.

Table 5-7 SMA ordering code

Ordering code	Functional group name	Former NTX package codes
BAS00003	BAS Generic	NTXF46AA—Subscriber Carrier Module-100 Access (SMA)

Tasks associated with datafilling the SMA

This section describes the tasks for data entry of the SMA with the DMS switch table editor. The SMA tables are in several categories. These categories appear in the following data entry summary:

- test trunks, test lines, and service circuits in table CLLI
- SMA and IDT data entry in tables SITE, LTCINV, LTCPSINV, RFTINV and LNINV
- call processing translations in the trunks, lines, screening and routing tables: TRKGRP, TRKSGRP, TRKMEM, LINEATTR, LENLINES and LENFEAT
- system alarms in tables ALMSCGRP, ALMSDGRP, ALMSD and ALMSC
- scan and signal distribution points in tables SCGRP and SDGRP
- metallic test access assignments in tables MTAMDRVE, MTAVERT and MTAHORIZ

Static datalog tracking

Logs monitor changes to tables RFTINV, LTCINV and LTCPSINV. These logs are TUPC100, TUPC101, TUPC102 and TUPC103. These logs indicate datafill changes. The logs provide a point to recreate, debug and solve field problems.

This feature helps to diagnose problems. The symptoms available at the time of service degradation do not always allow diagnosis the problem in the field. For additional information on TUPC logs, refer to the *XPM Log Reports Reference Manual*.

When to update static data

For the SMA to perform call processing, the SMA must recognize the configuration of SMA links and lines. The SMA must know which cards, ports, execs and integrated digital terminals (IDT) are present. External and internal tables contain this information. This information is static data because the information does not change during call processing. An example of data that is not staic is the call processing connections established. When this occurs, a call is set up and torn down when a call finishes.

The following conditions cause the downloading of static data to the SMA:

- The SMA is made busy and returned to service (RTS) only if the static data changes since the last occurance of static data download.
- The inactive unit is made busy and RTS. A cold SWACT occurs.
- The inactive unit is RTS with the NODATASYNC option. A cold SWACT occurs.
- Two cold SWACTs occur.

A static data update does not occur in the following conditions:

- The static data checksum completes. The system calculates static data checksum again when an RTS occurs. The system sends checksum to the computing module after a SMA dynamic static data update. This procedure allows SMA units to RTS in less time.
- The data integrity audit of SMA static data occurs on an IDT by IDT basis. The audit verifies the accuracy of the SMA static data.

Note 1: Data corruption can occur when the static data in the DMS host and the static data in the SMA do not match. When this condition occurs, the DMS host can determine a line is present but the SMA and the associated IDT determine the line is not present. This condition can cause the system to lose a call.

Note 2: The SMA SWACT can occur if the system detects static data corruption in the active SMA unit. This event prevents performance degradation caused by static data corruption.

Note 3: To disable the warm SWACT feature, RTS the inactive unit with the NODATASYNC option. To switch unit activity, a cold SWACT must occur.

Dynamic static date update

A dynamic static data update allows in-service SMAs to configure the SMA and the SMA P- and C-side links again. This configuration can occur without an update of the static data of the affected in-service IDT through an RTS. Changes to an IDT can occur with the SMA in service. Modifications to SMA P-side links and C-side speech links can occur with the SMA in service. Changes to SMA message links require a manually busy SMA.

Dynamic static data updates do not remove all static data mismatch ISTb conditions. Some table control changes affect static data in data fields that the system does not support. These changes can cause the SMA to go ISTb because of changes in these fields.

DMS recognition of the switching unit and all remote locations

Table SITE contains data that allows the DMS SuperNode system to recognize the equipment for the switching unit. The data also allows the switch to recognize equipment for all remote locations that home on to the switch. This table defines the site names for the remote location. Table SITE uses codes entered in table CLLI for switching unit trunk groups and the remote location. Table CLLI identifies the far end of each announcement, tone, trunk group, test trunk, national milliwatt test lines and service circuit.

Feature AF5678, XPM Node Table Sync Redesign, consolidates critical XPM node information in one table, PMNODES. The CM maintains a copy for each XPM unit. This procedure makes sure XPM units maintain synchronization of internal node and port tables. The XPM units do not get any data for the internal node or port tables. The active XPM unit does not continue to update the inactive unit tables. The inactive unit tables caused possible differences in the datafill of the tables. The CM downloads the same information to the two XPM units during updates.

DANGER

The system can reject an attempt to add or change tuples in any inventory table. This condition can occur when table space or node resources are not available.

The system can reject attempted changes in the inventory tables with Table Editor. The system displays the cause for the rejection and a list of actions to correct this condition. A busy and return to service of an XPM normally defragments the node tables. This procedure frees the required space. If XPM resources are not available, the following message appears:

The new node cannot be supported on SMA ACTION: None, resources have been exceeded on this XPMText

Note: Table PMNODES must appear as entered before any inventory tables in the datafill sequence list.

Base SCM Access

Functional group

Functional group: BAS00003

Feature package

Feature package: NTXF46AA Base SCM access

Release applicability

XPM10 and up

Prerequisites

To operate, Base SCM Access has the following prerequisites:

- Bilge, NTX000AA
- Common Basic, NTX001AA
- New Peripheral Maintenance, NTX270AA
- Local Features I, NTX901AA
- CM Bilge, NTX940AA
- CM Common, NTX941AA
- XPM Plus, NTXR34AB

Description

Base SCM Access allows the Subscriber Carrier Module-100 Access (SMA) to provide basic call processing capability for the subscriber lines connected to the remote fiber terminal (RFT).

In addition, the Meridian Digital Centrex (MDC) voice and data services, including Meridian business set (MBS) support, and subscriber services, including custom local area signaling services (CLASS) capabilities, options are supported. MDC requires the MDC software to be installed in the office.

The SMA provides a digital connection between a DMS-100 switch or DMS-100/200 SuperNode digital switch and the S/DMS AccessNode.

The SMAs capabilities are expanded to include any remote digital terminal (RDT) that complies with the DMS SuperNode switch implementation of Bellcore's TR-TSY-000303 (TR-303).

The SMA used in this environment supports the following benefits and services:

- subscriber services, including CLASS
- full range of MDC voice and data services
- plain old telephone services (POTS)
- coin services

Note: Throughout this document, the term RDT refers to the RFT and any TR-303-based RDT.

Operation

The SMA is based on the existing Subscriber Carrier Module (SCM) family. It provides the traditional advantages of directly integrating digital loop carriers, and supports a new range of advantages made possible through TR-303 and SONET (Synchronous Optical Network) standards.

The SMA shares hardware technology with the reliable SCM-100 Family of equipment currently in service. The SMA is a dual-shelf module equipped with fully duplicated power and control to ensure reliability. This redundant architecture incorporates one active shelf and one standby shelf. If the active unit fails, the standby unit automatically assumes control of all traffic.

The SMA is contained in the current standard DMS-100 single bay frame. The SMA shares common frame and shelf layout with existing SCM-100 Family products. Each frame can contain up to two SMAs.

Each SMA module can be connected to the DMS SuperNode network on the central-side (C-side) through 3-16 DS30 links, or one DS512 fiber link in Enhanced Network (ENET) offices.

On the peripheral-side (P-side), up to 20 DS-1 links are supported to provide interface with the remote access vehicle. A single SMA can support up to eight remote access vehicles. Up to 1344 lines can be supported for each RDT.

The software functions required in the DMS SuperNode switch to support the S/DMS AccessNode are grouped into the following categories:

- call processing (CP)—translates between the TR-303 based signaling protocol used on the P-side of the SMA and the proprietary signaling protocol used internal to DMS SuperNode switch.
- local digital switch (LDS) control—provides the table control and maintenance functions required to support the DMS SuperNode switch resources associated with the S/DMS AccessNode.

Base SCM Access (continued)

- operations gateway (OGW)—supplies the routing and communication services necessary to connect the S/DMS AccessNode to various operational entities.
- integrated digital terminal (IDT)—provides the software interface where the SMA communicates with an S/DMS AccessNode. The IDT is a logical entity of the SMA that identifies all of the elements of the SMA associated with the RDT. In essence, the IDT provides the basis for controlling the RDT.

Translations table flow

Standard translations data flow is not changed by this package.

Limitations and restrictions

The following restrictions and limitations apply to the SMA:

- The SMA supports up to 20 DS-1 connections.
- The SMA supports a single method of signaling for each RDT.
- A single SMA is designed to support a maximum of eight RDTs (five ISDN RDTs).

  Note: An RDT supports up to 324 ISDN lines.

- An IDT cannot be deleted if there are lines attached to it.
- The maximum number of different combinations of activated signal distribution (SD) points to indicate the RDT activating an alarm is 255.
- The SMA supports up to 20 P-side links from the RDT.
- The SMA supports up to 2048 lines for each RDT. However, the AccessNode currently has a hardware limit of 1344 lines.
- The maximum number of terminals for each RDT is 4095. However, the maximum number of terminals on the P-side node of an SMA cannot exceed 7055.

Interactions

Subscriber Carrier Module-100 Access has no functionality interactions.

Activation/deactivation by the end user

Subscriber Carrier Module-100 Access requires no activation or deactivation by the end user.

Billing

Subscriber Carrier Module-100 Access does not affect billing.

Station Message Detail Recording

Subscriber Carrier Module-100 Access does not Station Message Detail Recording.

Datafilling office parameters

The next table shows the office parameters used by Base SCM Access. For more information about office parameters, refer to the *Office Parameters Reference Manual.*

Office parameters used by Base SCM Access

Table name	Parameter name	Explanation and action
OFCVAR	TOLL_ DIVERSON_ SIGNAL	The TDV (toll diversion) option is controlled for private branch exchange (PBX) lines through this parameter. All attempted toll calls from a PBX line, with the TDV option set, result in a toll diversion signal (either reversal or wink) being sent to the PBX. After sending the toll diversion signal, the DMS-100 switch must wait for a period defined by operating company personnel, (0-1000 ms), for a disconnect from the PBX. If the disconnect signal is not received within this predefined period, the call is processed.
OFCOPT	XPM_MATE_ DIAGNOSTICS_ AVAILABLE	XMS-based peripheral module (XPM) mate diagnostics are activated by setting this parameter to Y. This ensures diagnostics are available to the resident switch. The XPM mate diagnostic feature enables the central control (CC) to diagnose a XPM unit through its mate XPM unit.
	VSLE_PRESENT	Visual screen list editing. When set to N (no), the analog services display interface (ADSI) line option must be assigned to the subscriber line in order for visual screen list editing (VSLE) to be accessed. When set to Y, VSLE is accessed without ADSI being assigned to the line.

Datafill sequence

In the SMA configuration, there are no trunks on the P-side of the SMA. However, trunk tables are used for locally and non-locally switched special services and non-switched services.

Base SCM Access (continued)

The next table lists the tables that require datafill to implement Subscriber Carrier Module-100 Access. The tables are listed in the order they are datafilled.

Datafill tables required for Base SCM Access (Sheet 1 of 4)

Table	Purpose of table
CLLI	Common language location identifier. Identifies the maintenance and test trunks used in the SMA subsystem.
SITE	Site. Allows the DMS switch to recognize the remote equipment tied to the host.
PMNODES	Peripheral module nodes. Contains all nodes resident in all XPMs for a given site. This table is datafilled automatically by the system.
LTCINV	Line trunk controller inventory. Inventories various peripheral module (PM) types including the SMA, and excluding P-side link assignments.
CARRMTC	Carrier maintenance control. Allows the DMS SuperNode switch administration to datafill maintenance control information in peripherals, out-of-service limits, alarms, and system return-to-service occurrences.
PMLOADS	Peripheral module loads. Stores a load map between the load names and devices where the loads reside. This permits auto load to locate load files without the intervention of operating company personnel.
LTCPSINV	Line trunk controller P-side line inventory. Identifies the SMA module type, number, and port designation of the P-side links.
ALMSCGRP	Alarm scan group. Records the circuit equipment, location, type of card, and serves as a head table for the respective scan points.
ALMSDGRP	Alarm signal distributor group. Records the circuit equipment, location, and type of card and serves as a head table for the respective signal distributor points.
ALMSC	Alarm scan. Identifies the functions to be performed by each of the assigned scan points in the alarm scan groups.
ALMSD	Alarm signal distributor point. Identifies the function to be performed by each of the assigned signal distributor points in the alarm signal distributor groups.
DCHINV	D-channel handler inventory. Identifies the physical, service, and channel allocation characteristics of D-channel hander (DCH).
ISGDEF	ISDN service group definition. Identifies the ISDN service group (ISG) numbers, PM type, the services provided, and the allocation of services to channels.
Note: This table is datafilled through SERVORD; therefore, no datafill procedure or example is provided. Refer to “SERVORD" for an example of using SERVORD to datafill this table.	

Base SCM Access (continued)

Datafill tables required for Base SCM Access (Sheet 2 of 4)

Table	Purpose of table
LTGRP	Logical terminal group. Allows up to 32 logical terminal group definitions.
LTDEF	Logical terminal definition. Defines logical terminals within group and access privileges.
LTMAP	Logical terminal map. Maps the ISDN logical terminals to a LEN or terminal identifier (TEI). (See Note.)
SPECCONN	P-Side to P-side special connection. Defines special permanent dedicated connections through the SMA.
RDTINV	Remote digital terminal. Allows the DMS SuperNode switch administration to datafill RDTs and their corresponding IDTs. This table contains the C-side connectivity information and RDT configuration information.
TMINV	Trunk module inventory. Identifies the trunk modules (TM) that contain test circuits that terminate test pairs connected to RDT lines.
TRKGRP	Trunk group. Identifies the test circuits associated with the maintenance and test trunks.
TRKSGRP	Trunk subgroup. Lists the supplementary information for each subgroup assigned to one of the trunk groups listed in table TRKGRP.
TRKMEM	Trunk member. Identifies the circuits associated with the test equipment used to test lines and trunks.
SFWALARM	Software alarm. Identifies system alarms.
LINEATTR	Line attribute. Assigns line attributes to regular lines in table LENLINES, Meridian stations and attendant consoles in the MDC translations tables.
LNINV	Line circuit inventory. Retains an inventory of subscriber lines and associated line cards.
RDTLT	Remote digital terminal line termination. Specifies the next operation to be performed by line object provisioning.
IBNLINES	IBN line assignment. Defines the line assignments for each MDC station number. (See Note.)
IBNFEAT	IBN line feature. Defines the line features assigned to the MDC lines listed in table IBNLINES. (See Note.)
Note: This table is datafilled through SERVORD; therefore, no datafill procedure or example is provided. Refer to “SERVORD" for an example of using SERVORD to datafill this table.	

Base SCM Access (continued)

Datafill tables required for Base SCM Access (Sheet 3 of 4)

Table	Purpose of table
CDCLENS	Customer data change line. Lists the line equipment numbers (LEN)s assigned to a customer group.
KSETINV	Business set and data-unit inventory. Stores inventory data for each line card slot assigned to Meridian business sets and data units. (See Note.)
KSETLINE	Business set and data-unit inventory line assignment. Defines the data for directory number appearances on Meridian business sets and data units. (See Note.)
KSETFEAT	Business set and data-unit inventory line feature. Defines the line features assigned to business sets and data units listed in table KSETLINE. (See Note.)
LENLINES	Line assignment.Lists the following data for each line: • site name, if the line is remote • line equipment number • party where the directory number is assigned • ringing code assigned to the directory lines • directory number • signal type • index into the line attribute (LINEATTR) table • list of options (See Note.)
LENFEAT	Line feature. Lists the features assigned to a specific line in table LENLINES. (See Note.)
SCGRP	Scan group. List the physical location of the scan groups that provide SC points for line features.
SDGRP	SIgnal distributor group. List the physical location of the SD groups that provide SD points for line features.
LTDSD	Line-test desk signal distribution. Identifies the SD point used to drive the applique circuit during mechanized loop testing.
MTAMDRVE	Metallic test access minibar driver. Specifies the physical location of the metallic test access (MTA).
Note: This table is datafilled through SERVORD; therefore, no datafill procedure or example is provided. Refer to “SERVORD" for an example of using SERVORD to datafill this table.	

Datafill tables required for Base SCM Access (Sheet 4 of 4)

Table	Purpose of table
MTAVERT	Metallic test access vertical connection. Identifies the vertical connectivity to the MTA matrix.
MTAHORIZ	Metallic test access horizontal connection. Lists the assignment to a horizontal and horizontal group of metallic test access minibar drivers (MTAM).
AMAOPTS	AMA options. Controls the activation and scheduling of the recording options for automatic message accounting (AMA).
RESFEAT	Residential line feature. Contains the assignment of custom local area signaling services (CLASS) features for residential lines. (See Note.)
RESOFC	Residential line CLASS office data. Contains data pertaining to CLASS features. (See Note.)
TEXTPHRS	Test phrases. Contains the physical text phrases displayed on the customer premise equipment (CPE).
TEXTLOG	Logical display text. Contains the logical names of the physical text phrases.
SOFTKEY	Softkey. Specifies softkey information for application services.
DCSWDTYP	Deluxe spontaneous call waiting identification (DSCWID) type. Defines DSCWID treatment of subscriber lines.
Note: This table is datafilled through SERVORD; therefore, no datafill procedure or example is provided. Refer to “SERVORD" for an example of using SERVORD to datafill this table.	

Datafilling table CLLI

Common language location identifier (CLLI) codes are used to uniquely identify the far end of each announcement, tone, trunk group, test trunk, national milliwatt test lines, and service circuit.

Base SCM Access (continued)

The following table shows the datafill specific to Base SCM Access for table CLLI. Only those fields that apply directly to Base SCM Access are shown.

Datafilling table CLLI (Sheet 1 of 2)

Field	Subfield or refinement	Entry	Explanation and action
CLLI		see subfields	Common language location identifier. This 16-character field uniquely identifies the far end of each announcement, tone, trunk group, test trunk, national milliwatt test lines, and service circuit.
	PLACE	alphanumeric	Place. This four-character code identifies the name of the city or town at the far end of each group.
	PROV	alphanumeric	Province or state. This two-character code identifies the province or state at the far end of the trunk group.
	BLDG	alphanumeric	Building. This two-character code identifies the building number at the far end of the trunk group.
	TRAFUNIT	alphanumeric	Traffic unit. This three-character code identifies the destination of the traffic unit at the far end of the trunk group.
	SUFX	alphanumeric	Suffix. This one-character code uniquely identifies trunk groups that terminate at the same CLLI location.
ADNUM		0 to a number one less than the size of table CLLI shown in table DATASIZE.	Administrative trunk group number. Enter a number from 0 to a number one less than the size of table CLLI shown in table DATASIZE. The value must be unique.
TRKGRSIZ		0-2047	Trunk group size. This four-character field is equal to the maximum quantity of trunk members expected to be assigned to the trunk group.

Note 1: Memory is allocated by the SIZE field in table data size (DATASIZE) for the entry with field DATSKEY equal to CLLI.

Note 2: The maximum number of CLLI codes is 8192.

Datafilling table CLLI (Sheet 2 of 2)

Field	Subfield or refinement	Entry	Explanation and action
ADMININF		see subfields	Administrative information. This 32-character field is used by the operating company to record administrative information. The information in this field is not used by the switching unit. The recommended subfields are TRAFCLS, OFFCLS, and TRKGRTYP.
	TRAFCLS	alphanumeric	Trunk group traffic class. This field is optional input for administrative purposes only.
	OFFCLS	alphanumeric	Office class. This field is optional input for administrative purposes only.
	TRKGRTYP	alphanumeric	Trunk group type. This field is optional input for administrative purposes only.
Note 1: Memory is allocated by the SIZE field in table data size (DATASIZE) for the entry with field DATSKEY equal to CLLI. ***Note 2:*** The maximum number of CLLI codes is 8192.			

Datafill example for table CLLI

The following example shows sample datafill for table CLLI.

MAP display example for table CLLI

```
      CLLI  ADNUM  TRKGRSIZ                    ADMININF
-------------------------------------------------------
MTADRIVER   250         32  METALLIC_TEST_ACCESS_DRIVER
  MONTALK   254         32                 VERIFICATION
   MJACK    257        256               METALLIC_JACK
      MTU   259         32           METALLIC_TEST_UNIT
```

Datafilling table SITE

Table SITE contains data for the switching unit and for all remote locations connected to it. Before a LEN can be assigned and before a PM can be datafilled, table SITE must be datafilled to allow the DMS SuperNode switch to recognize the equipment.

The first entry in table SITE must be HOST for the host switching unit. The site names for the remote locations are defined by the operating company.

Base SCM Access (continued)

The following table shows the datafill specific to Base SCM Access for table SITE. Only those fields that apply directly to Base SCM Access are shown.

Datafilling table SITE (Sheet 1 of 2)

Field	Subfield or refinement	Entry	Explanation and action
NAME		Host or alphanumeric	Site name. Enter the site name assigned to the remote switching unit. The first character must be a letter. Site names may be up to four characters in length. PM type names cannot be used for site names. The first entry in this field is for the host switching unit.
LTDSN		00-99	LEN test desk site number. Enter a unique two-digit number required to dial the site that appears under field NAME.
MODCOUNT		0	Module count. Enter zero.
OPVRCLLI		Ver90 or alphanumeric	Operator verification CLLI. Enter the CLLI assigned to the operator verification trunk group at the remote location.
ALMDATA		see subfields	Alarm data. This field is for remote locations only and consists of subfields ALMTYPE, TMTYPE, TMNO, TMCKTNO, POINT, and CONTMARK.
	ALMTYPE	CR, MJ, MN, or blank	Alarm type. Enter the alarm type. This field is for remote locations. Where entry is for the host switching unit, leave blank.
	TMTYPE	RSM, RMM, or blank	Trunk module type. Enter the trunk module type (remote service module) where the miscellaneous signal distributor point assigned to the alarm is located. Where entry is for the host switching unit, leave blank.
	TMNO	0-99	Trunk module number. Enter the number assigned to the remote service module where the miscellaneous signal distributor point assigned to the alarm is located. Where entry is for the host switching unit, leave blank.
Note: Memory is automatically allocated for a maximum of 32 sites.			

Datafilling table SITE (Sheet 2 of 2)

Field	Subfield or refinement	Entry	Explanation and action
	TMCKTNO	0-23	Trunk module circuit number. Enter the trunk module circuit on the remote service module where the miscellaneous signal distributor point assigned to the alarm is located. Where entry is for the host switching unit, leave blank.
	POINT	0-6	Point. Enter the signal distributor point number within the trunk module circuit number which is assigned to the alarm. Where entry is for the host switching unit, leave blank.
	CONTMARK	+ or $	Enter a plus sign (+) when additional data for the site is specified on the next record. Otherwise, enter a dollar sign ($) to terminate this vector.
Note: Memory is automatically allocated for a maximum of 32 sites.			

Datafill example for table SITE

The following example shows sample datafill for table SITE.

MAP display example for table SITE

```
        NAME
LTDSN        MODCOUNT      OPVRCLLI
                                                ALMDATA
-------------------------------------------------------
        HOST
   00              4          VER90              $
```

Datafilling table PMNODES

Table Peripheral module nodes (PMNODES) is a read only table, and is used by the CM to control XPM unit node tables. Table PMNODES is automatically datafilled when entries are added or changed in inventory tables, such as line trunk controller inventory (LTCINV). An entry exists in table PMNODES for all subtending nodes of each XPM. Fields are updated to reflect CM control of configuration data tables in the XPM nodes. As nodes are deleted, spaces may appear in the table, these spaces are not always filled when a new node is added.

Tuples in table PMNODES, are managed to enable subtending nodes to have a higher index than their head node. Attempts by operating company

Base SCM Access (continued)

personnel to update this table directly are rejected. XPM resources are checked when a tuple for a subtending node is added or changed in an inventory table. During a one night process (ONP) table PMNODES must be transferred before any hardware inventory tables. Warnings are displayed when a XPM does not have the table space, port, or terminal resources to support the new requirements.

The following table shows the datafill specific to Base SCM Access for table PMNODES. Only those fields that apply directly to Base SCM Access are shown.

DANGER

An attempt to add or change tuples in any inventory table may be rejected by the system if table space or node resources are not available.

Attempted changes in the inventory tables with the table editor may be rejected. The system displays an explanation and possible corrective actions. Usually BSYing and RTSing a XPM, defragments the node tables, thus freeing required space. If XPM resources are not available, the following message is displayed.

The new node cannot be supported on SMA

ACTION: None, resources have been exceeded on this XPM.

Datafilling table PMNODES (Sheet 1 of 3)

Field	Subfield or refinement	Entry		Explanation and action
TABKEY		0 to 4095 to 117	0	Table key. Two-part key, separated by a space, identifying the XPM where the unit node table is. The first part is host external node number. The second part is internal index number.
EXTNDNUM		0 to 4095		External node number. External number assigned by CM to the XPM identified in field TABKEY.
NODETYPE		LTC_NODE		Node type of XPM. Generic type of PM node.

Datafilling table PMNODES (Sheet 2 of 3)

Field	Subfield or refinement	Entry	Explanation and action
PMTYPE		SMA	PM type. Specific PM type assigned to the node.
LEVEL		0 to 15	PM level. The number of device levels the XPM node is separated from the messaging host. Begins at level 0 for messaging (head) XPMs.
MSGHOST		0 to 4095	Messaging host. External node responsible for transferring messages to this node. A messaging host must be capable of transferring messages.
PHYSHOST		0 to 4095	Physical host. External node this XPM node is physically attached.
PORTS		0 to 127	Number of ports. Total number of P-side ports in the physical host required by this XPM node.
STPORT		0 to 255	Starting port. First P-side port in the physical host used by this XPM node.
TERMS		0 to 4095	Number of terminals. Total number of terminals in the physical host required by this XPM node.
STTERM		0 to 8675	Starting terminal. First terminal in the physical HOST used by this XPM node.
PROTOCOL		MDS30, MDMSX or MHDLC	Message protocol. Type of message protocol used by the physical host to node links.
MS		M or S	Master or slave. Enter M if this node contains the master clock, otherwise enter S for slave clock.
IPML		Y or N	Inter-peripheral message link (IPML). Enter yes (Y) if this node is configured as part of an IPML, otherwise enter no (N).
MODE		T or P	Table entry mode. Entries in table are made by terminal (T) or port (P) indexing.

Base SCM Access (continued)

Datafilling table PMNODES (Sheet 3 of 3)

Field	Subfield or refinement	Entry	Explanation and action
SLLCON		Y or N	Site line load control. Enter yes (Y) if this node is at a site using Essential Line Service Protection (ESP), or other site line load control features, otherwise enter no (N).
NT6X28		N	Uses NT6X28 card. Enter yes (Y) if this XPM uses the NT6X28 circuit card. The NT6X28 signaling interface card is used on the International Digital Trunk Controller (IDTC). Always enter no (N).
LCMLGMEM		Y or N	LCM large memory. Enter yes (Y) if this XPM is a LCM with large memory (256k bytes), otherwise enter no (N).
RSVPORTS		Y or N	Reserved ports. Enter yes (Y) if this XPM has ports reserved for messaging, otherwise enter no (N).
RSVTERMS		Y or N	Reserved terminals. Enter yes (Y) if this XPM has terminals reserved for messaging, otherwise enter no (N).
MATENODE		Y or N	Mate node. Enter yes (Y) if this node is part of a dual configuration, otherwise enter no (N).
PACKED		Y or N	Packed internal tables. Enter yes (Y) if internal node tables are packed on this node. ***Note:*** Previously the node table was compressed when the XPM was returned-to-service with the NODATASYNC option. Compression now happens when both units of a XPM are taken out-of-service, and loaded by the CM.
SUPPCDT		YY NN	Support configuration data table (CDT). Enter yes (YY) for each unit if CDT management is supported, otherwise enter no (N).
CMINCTRL		Y or N	CM node control. Enter yes (Y) if the node is under CM control, otherwise enter no (N).

Datafill example for table PMNODES

The following examples show datafill for table PMNODES.

MAP display example for table PMNODES (SMA tuple)

```
Table: PMNODES
  TABKEY  EXTNDNUM   NODETYPE   PMTYPE LEVEL MSGHOST  PHYSHOST  PORTS
-------------------------------------------------------------------------
  25   1      25     LTC_NODE     SMA    0      25        25     16
  STPORT  TERMS STTERM  PROTOCOL MS IPML MODE SLLCON NT6X28 LCMLGMEM
-------------------------------------------------------------------------
     0      1     1      MDS30   S   N    P     N      N        N
  RSVPORTS   RSVTERMS   MATENODE   PACKED   SUPPCDT   CMINCTRL
-------------------------------------------------------------------------
    Y          Y           N         Y        YY         Y
```

MAP display example for table PMNODES (SMA to IDT tuple)

```
Table: PMNODES
  TABKEY  EXTNDNUM   NODETYPE   PMTYPE LEVEL MSGHOST  PHYSHOST  PORTS
-------------------------------------------------------------------------
  25   2     33      IDT_NODE     IDT    1      25        25     20
STPORT  TERMS STTERM  PROTOCOL MS IPML MODE SLLCON NT6X28 LCMLGMEM
-------------------------------------------------------------------------
  0       1     1      MDS30   S    N    P     N      N       N
RSVPORTS   RSVTERMS   MATENODE   PACKED   SUPPCDT   CMINCTRL
-------------------------------------------------------------------------
   Y          Y          N         Y        YY         Y
```

Datafilling table LTCINV

Table line trunk controller inventory (LTCINV) contains the inventory data, excluding P-side link assignments addressed in table LTCPSINV, for various PM types, including the SMA.

The following table shows the datafill specific to Base SCM Access for table LTCINV. Only those fields that apply directly to Base SCM Access are shown.

Datafilling table LTCINV (Sheet 1 of 5)

Field	Subfield or refinement	Entry	Explanation and action
LTCNAME		see subfields	Line trunk controller name. This field contains subfields XPMTYPE and XPMNO.
	XPMTYPE	SMA	Peripheral module type. Enter the type of PM.
Note: Memory is allocated as required to allow a maximum sum of 210 tuples in tables LTCINV and LTCRINV combined.			

Base SCM Access (continued)

Datafilling table LTCINV (Sheet 2 of 5)

Field	Subfield or refinement	Entry	Explanation and action
	XPMNO	0-127	Peripheral module number. The range is 0-127 because the SMA is part of the host office. ***Note:*** Operating company personnel can number the XPMs from 0 to 127 but the total number of tuples in tables LTCINV and LTCRINV combined cannot exceed 210 XPMs. The XPM types can be any combination of types accepted by the two tables.
ADNUM		0-4095	Administration number. This number is used by the engineering and administrative data acquisition system for data collection (EADAS/DC) to identify nodes within the DMS-100 Family switch. This number remains fixed over dump and restore.
FRTYPE		LTEI	Frame type. Enter the frame type where the PM equipment is mounted.
FRNO		0-511	Frame number. Enter the frame number of the SMA.
SHPOS		18, 32, 51, and 65	Shelf position. Enter the position of the shelves on the frame in inches above the floor level.
FLOOR		0-99	Floor. Enter the floor where the PM equipment frame is located.
ROW		A-H, J-N, P-Z, AA-HH, JJ-NN, and PP-ZZ	Row. Enter the row on the floor where the PM equipment frame is located.
FRPOS		0-99	Frame position. Enter the position in the row of the PM equipment frame.
EQPEC		alphanumeric	Equipment product engineering code. Enter the PEC of the PM.
LOAD		alphanumeric	Load name. Enter the name given to the issue of PM software.

Note: Memory is allocated as required to allow a maximum sum of 210 tuples in tables LTCINV and LTCRINV combined.

Datafilling table LTCINV (Sheet 3 of 5)

Field	Subfield or refinement	Entry	Explanation and action
EXECTAB		see subfields	Executive table. This field contains subfields TRMTYPE, EXEC, and CONTMARK. ***Note:*** Changes to fields with multiple entries should be made in the PROMPT mode only.
	TRMTYPE	alphanumeric	Terminal type. Enter the type of terminal models to be used. POTS is used for regular lines, KEYSET for Meridian business set (MBS)/data lines, RMM_TERM for remote maintenance trunks, ABTRK for regular trunks, R1_TERM for DTC300 trunks, and MX5X09 and M5X12 for Meridian 9 and 12 button sets.
	EXEC	alphanumeric	Executive programs. Enter the set of executive programs required for the PM specified in the TRMTYPE field. For example, use POTSEX to provide POTS, and KSETEX to provide MBS services.
	CONTMARK	+ or $	Continuation mark. Enter a plus sign (+) when the vector continues on the next line. Otherwise, enter $ to end the vector.
CSLNKTAB		see subfields	C-side link table. For switches equipped with the old junctored network (JNET), this field contains subfields NMPAIR, NMPORT, and CONTMARK. For switches equipped with the enhanced network (ENET), this field contains subfields ENPAIR, ENSLOT, ENLINK, and CONTMARK. ***Note:*** Changes to fields with multiple entries should be made in the PROMPT mode only.
	NMPAIR	0-31	Network module pair number. Enter the network link where the PM is assigned, corresponding to the provisioned C-side links of the PM.
Note: Memory is allocated as required to allow a maximum sum of 210 tuples in tables LTCINV and LTCRINV combined.			

Base SCM Access (continued)

Datafilling table LTCINV (Sheet 4 of 5)

Field	Subfield or refinement	Entry	Explanation and action
	NMPORT	0-63	Network port number. Enter the network port corresponding to the preceding link.
	ENPAIR	0-3	ENET pair number. Enter the network link where the PM is assigned, corresponding to the provisioned C-side links of the PM.
	ENSLOT	9-32	ENET slot number. Enter the crosspoint slot number where the PM is assigned, corresponding to the provisioned C-side links of the PM.
	ENLINK	0-15	ENET link number. Enter the link on the crosspoint where the PM is assigned, corresponding to the provisioned C-side links of the PM.
	CONTMARK	+ or $	Continuation mark. Enter a plus sign (+) when the vector continues on the next line. Otherwise, enter a dollar sign ($) to end the vector.
OPTCARD		alphanumeric	Optional card. This is a vector of up to ten entries. For the SMA, slot 16 must be used for the ISP card. Slot 15 can only be used for the universal tone receiver (UTR) card. The CLASS modem resource (CMR) card can only be plugged in slot 17. Examples are UTR15, MSG6X69, CMR17 and ISP 16. ***Note:*** Changes to fields with multiple entries should be made in the PROMPT mode only.
	CMRLOAD	alphanumeric	CLASS modem resource load. This is a vector of up to eight characters. Enter the CMR software load.
CONTMARK		+ or $	Continuation mark. Enter + when the vector continues on the next line. Otherwise, enter $ to end the vector.

Note: Memory is allocated as required to allow a maximum sum of 210 tuples in tables LTCINV and LTCRINV combined.

Datafilling table LTCINV (Sheet 5 of 5)

Field	Subfield or refinement	Entry	Explanation and action
TONESET		NORTHAM, or NORTHAA	Tone set. Enter the tone set appropriate for the switch being datafilled.
PROCPEC		AX74AA	Processor equipment PECs. One PEC is required for each unit of the SMA. Enter the PEC for unit 0 first. The PEC datafilled for a unit must correspond to the minimum firmware capabilities in the processor complex of each unit. The PEC for the SMA is AX74AA.
EXTLINKS		0 to 6	Number of extended links. Enter 0 because there are no extended links on the SMA.
E2LOAD		alphanumeric	Electrically erasable programmable read-only memory. Contains the name of the load file that is loaded in the NTAX74AA EEPROM.
OPTATTR		$	Optional attribute. This vector is datafilled for digital terminal controller (DTC) PMs only. Enter a $ to end the vector.
PEC6X40		6X40AA, AB, AC, AD, FA, or FB	6X40 equipment PEC. Enter the version to the 6X40 card in the peripheral. The default is 6X40AA. The value entered is displayed in error messages when a faulty card is detected.
Note: Memory is allocated as required to allow a maximum sum of 210 tuples in tables LTCINV and LTCRINV combined.			

Datafill example for table LTCINV

The following example shows sample datafill for table LTCINV.

Base SCM Access (continued)

MAP display example for table LTCINV

```
LTCNAME
   ADNUM FRTYPE FRNO SHPOS FLOOR ROW  FRPOS EQPEC  LOAD
                                          EXECTAB
                                         CSLNKTAB
                                  OPTCARD
TONESET      PROCPEC EXTLINKS  E2LOAD
                                  OPTATTR PEC6X40
-------------------------------------------------
SMA 0
     1000 LTEI  0   18     1    E    2 6X02TE XSC81AZ
               (    POTS POTSEX) (  KEYSET KSETEX)$
(0 47) (0 55) (1 47) (1 55) (0 62)(1 62)(0 5)(1 5)$
           (ISP) (MSG6X69) (CMR17) (CMR07A) $
NORTHAM    AX74AA  AX74AA 0  AX74XE01
  6X40AC                                        $
```

Datafilling table CARRMTC

Table carrier maintenance (CARRMTC) allows the DMS switch administration to datafill maintenance control information in peripherals, out-of-service limits for alarms, and system return-to-service occurrences.

Table CARRMTC contains the attributes of DS-1 links, such as the line coding and frame formats along with maintenance control information.

A carrier, by definition, maintains communication on links connecting DMS peripherals to channel banks, DMS peripherals to remote DMS peripherals, or remote to remote DMS peripherals.

Up to 16 entries exist for each type of peripheral capable of providing carrier links in the switch. The choice of entries for each carrier is datafilled in the inventory table of the C-side peripheral, table LTCPSINV.

The following checks are made between table CARRMTC and table LTCPSINV:

- When a carrier index (CARRIDX) is datafilled in table LTCPSINV, an entry for the PM type, in this case the SMA, must be present in table CARRMTC.
- When an entry is deleted from table CARRMTC, the entry cannot be referenced by any carriers in table LTCPSINV. Otherwise, the deletion command is rejected.
- When an existing entry in table CARRMTC is changed, table LTCPSINV is checked to determine if the entry is referenced by in-service carriers. If

so, the change command is rejected, and a list of in-service carriers is displayed.

The DMS SuperNode switch adds the first tuple for SMA to table CARRMTC automatically during initial program load (IPL) or first restart after IPL. The entry is designated as index 0 and has the value DEFAULT in the TMPLTNM field, and default values for other fields.

This tuple cannot be deleted, and only fields ES, SES, and thresholds for frame and slip losses, can be changed. Tuples other than the default tuple must be added manually before they can be referenced in table LTCPSINV.

These tuples can be deleted only if no DS-1 carriers are associated with them. Tuples can be changed in table CARRMTC only if the associated DS-1 carriers are manually busy or offline.

The next table shows the datafill specific to Base SCM Access for table CARRMTC. Only those fields that apply directly to Base SCM Access are shown.

Datafilling table CARRMTC (Sheet 1 of 4)

Field	Subfield or refinement	Entry	Explanation and action
CSPMTYPE		SMA	C-side node PM type. Enter the PM type of the node on the C-side of the carrier link.
TMPLTNM		Default	Template name. Enter the template name (up to 16 characters) for the PM. This entry also appears in the field CARRIDX of table LTCPSINV. The default value is DEFAULT. ***Note:*** Datafill as NO_YELLOW_ALM to activate values in fields BEROL and BERML.
RTSML		0-255	Return to service maintenance limit. Enter the number of times within the audit interval, a carrier may be returned to service by the system before a warning is issued. Value 255 disables this feature.
RTSOL		0-255	Return to service out-of-service limit. Enter the number of times within the audit interval, a carrier may be returned to service by the system, before it is placed permanently out of service. Value 255 disables this feature.

Base SCM Access (continued)

Datafilling table CARRMTC (Sheet 2 of 4)

Field	Subfield or refinement	Entry	Explanation and action
CONTMARK		+	Continuation mark. Enter + for record to be continued on the next line.
ATTR		see subfield	Attribute. This field contains subfield SELECTOR.
	SELECTOR	DS1	Selector. Enter carrier type DS1.
	CARD	NT6X50AB	Card. Enter the product engineering code (PEC) of the DS-1 interface card used. The PEC for the DS1- interface card in the SMA is NT6X50AB. NT6X50AB provides 64 kb/s clear-channel capability required for MBS services operating in B8ZS mode.
	VOICELAW	MU_LAW	Voice law. Enter the voice law used in the carrier. A_LAW is used mainly in international switches. MU_LAW is used mainly in North American switches.
	FF	ESF	Frame format. Enter extended super frame format (ESF) in this field. The SMA-RDT subsystem uses the 24-frame format.
	ZLG	ZCS or B8ZS	Zero logic. Enter ZCS for zero code suppression. A byte of zeroes is transmitted with a 1 in the least significant bit position. This results in an incorrect transmission for data in the SMA RDT subsystem and causes minor noise for speech. ZCS precludes the use of ISDN. Enter B8ZS for bipolar 8-bit zero substitution. B8ZS is required for 64 kb/s clear-channel capability for MBS and ISDN services.
	BERB	CRC or BPV	Bit error rate base. Enter CRC for cyclic redundancy check violations. BER calculations based on CRCs detect problems on the entire DS-1 path. Enter BPV for bipolar violations. BER calculations based on BpVs detect problems on the last DS-1 line in the path.
	DLK	NILDL	Data link. Currently, only NILDL is supported.

Datafilling table CARRMTC (Sheet 3 of 4)

Field	Subfield or refinement	Entry	Explanation and action
	IAT	N	Inhibit alarm transmit. Enter N for the IAT field for the SMA-RDT configuration.
	LCGAST	250	Local carrier group alarm set threshold. Enter value for the threshold in units of 10 ms. Entry of 250 is recommended. The range is 0-9999.
	LCGACL	1000	Local carrier group alarm clear threshold. Enter value for the threshold in units of 10 ms. Entry of 1000 is recommended. The range is 0-9999.
	RCGAST	50	Remote carrier group alarm set threshold. Enter value for the threshold in units of 10ms, in other words, the entry is multiplied by 10. This field is set by the system at 50 providing a threshold value of 500 ms. This value overrides datafill. The range is 0-9999.
	RCGACL	50	Remote carrier group alarm clear threshold. Enter value for the threshold in units of 10ms, in other words, the entry is multiplied by 10. This field is set by the system at 50 providing a threshold value of 500 ms. This value overrides datafill. The range is 0-9999.
CONTMARK		+	Continuation mark. Enter plus sign (+) for record to be continued on the next line.
	AISST	1-9999	Alarm indication signal set threshold. Enter value for the threshold in units of 10 ms.
	AISCL	1-9999	Alarm indication signal clear threshold. Enter value for the threshold in units of 10 ms. The range is 1-9999.
	BEROL	3-6	Bit error rate out-of-service limit. Enter the bit error rate out-of-service limit expressed as the negative of the exponent of 10 (10E-n). For example, 3 represents a1 in1000 bit error rate. ***Note:*** If field TMPLTNM is datafilled as DEFAULT, the system sets this value to 3 and overrides datafill. If field TMPLTNM is datafilled as NO_YELLOW_ALM, this value is user-controlled for any value in the range.

Base SCM Access (continued)

Datafilling table CARRMTC (Sheet 4 of 4)

Field	Subfield or refinement	Entry	Explanation and action
	BERML	4-7	Bit error rate maintenance limit. Enter the bit error rate maintenance limit expressed as the negative of the exponent of 10 (10E-n). ***Note:*** If field TMPLTNM is datafilled as DEFAULT, the system sets this value to 6 and overrides datafill. If field TMPLTNM is datafilled as NO_YELLOW_ALM, this value is user-controlled for any value in the range.
	ES	0-9999	Error second threshold. Enter value for the threshold in units of 10 ms.
	SES	0-9999	Severe error second threshold. Enter value for the threshold in units of 10 ms.
	FRAMEML	0-9999	Frame maintenance limit. Enter the maintenance limit for frame loss.
	FRAMEOL	0-9999	Frame loss limit. Enter the out-of-service limit for frame loss. FRAMEOL should be larger than FRAMEML.
	SLIPML	0-9999	Slip maintenance limit. Enter the maintenance limit for slip.
	SLIPOL	0-9999	Slip out-of-service limit. Enter the out-of-service limit for slip. SLIPOL should be larger than SLIPML.

BpV handling

Bipolar violation (BpV) levels for the RDT are hard-coded in SMA software to be 1E-3 (a 1 in 1000 bit error rate) for the out-of-service limit and 1E-6 for the maintenance (MTC) limit.

When field TMPLTNM is datafilled as DEFAULT, BpV reports are compared to these hard-coded values to determine if an alarm should be raised.

RDT BpV levels are user-controllable when field TMPLTNM is datafilled as NO_YELLOW_ALM. In this case, RDT BpV levels are compared with the values datafilled in fields BEROL and BERNL to determine if an alarm should be raised.

Datafill example for table CARRMTC

The following example shows sample datafill for table CARRMTC.

MAP display example for table CARRMTC

```
  CSPMTYPE   TMPLTNM RTSML RTSOL                  ATTR
-------------------------------------------------------
 SMA DEFAULT 255 255 DS1 NT6X50AB MU_LAW ESF B8ZS BPV NILDL
 N 250 1000 50 50 150 1000 3  6 864 100 17 511  4  255
```

Datafilling table PMLOADS

Table PMLOADS is used to store the device location of every PM load file. This permits the XPM automatic loading feature to locate load files without the intervention of operating company personnel.

Table PMLOADS lists the active and backup loadfiles. The active loadfile is always the default load used with the LOADPM command and most system activities. The backup loadfile is used if there is a problem in loading or returning to service the active loadfile. The backup loadfile is always the unpatched loadfile that Nortel (Northern Telecom) shipped. The active and backup loadfiles are used when applying and removing patches.

Table PMLOADS stores data for

- the name of the active loadfile. This is the default load used with the LOADPM command and most system initiated activities
- the name of the backup loadfile. This is the load used if there is a problem in loading or returning to service the active loadfile. The backup loadfile is always the unpatched loadfile shipped with the SMA.
- the file locations.
- the update active loadfile field, which indicates if the site wants the active fileid updated automatically.. The feature allows the patched loadfile to be loaded into the XPM should a reload be necessary which simplifies reload and recovery of the XPM. The active file information is updated through loadfile patching, if loadfile patching is enabled.

The active and backup files are used by the system as part of loading and recovery.

Base SCM Access (continued)

The XPM load files must be datafilled in table PMLOADS before they can be datafilled in table LTCINV. Table LTCINV enforces this rule.

Note: An exception to this rule occurs during initial datafill, and during dump and restore. During these times, tuples in table PMLOADS are automatically datafilled when LTCINV tuples are datafilled.

The next table shows the datafill specific to Base SCM Access for table PMLOADS. Only those fields that apply directly to Base SCM Access are shown.

Datafilling table PMLOADS

Field	Subfield or refinement	Entry	Explanation and action
LOADNAME		alphanumeric	Peripheral module load name. Enter the XPM load file name. The range is up to eight characters.
ACTFILE		alphanumeric	Active load file name. The name of the active XPM loadfile. This could be the original loadfile or a patched loadfile (PPXL). Range is up to 32 characters.
ACTVOL		alphanumeric	Active volume. Identifies the device where the active loadfile is stored. Range is the set of disk drive unit (DDU) volumes and system load module (SLM) disks available to the CM (that is, S00DXPM). Range is up to 16 characters.
BKPFILE		alphanumeric	Backup load file name. Identifies the name of the backup XPM loadfile. It should be the same name as the LOADNAME field. Range is up to 32 characters
BKPVOL		alphanumeric	Backup volume. The device where the backup loadfile is stored. Range is the set of DDU volumes and SLM disks available to the CM (that is, S00DXPM). Range is up to 16 characters.
UPDACT		alphanumeric	Update active filename. Currently not used. The default value is N.

Datafill example for table PMLOADS

The following example shows sample datafill for table PMLOADS.

MAP display example for table PMLOADS

```
          LOADNAME
          ACTFILE    ACTVOL
          BKPFILE    BKPVOL      UPDACT
-------------------------------------
          XSC81AZ
 XSC81AZ_970705      S01DXPM
          XSC81AZ    S01DXPM     N
```

Datafilling table LTCPSINV

The line trunk controller P-side link inventory (LTCPSINV) table lists the following data assignment for each bay associated with a SMA unit:

- PM type and number
- port designation of the P-side links

The following table shows the datafill specific to Base SCM Access for table LTCPSINV. Only those fields that apply directly to Base SCM Access are shown.

Datafilling table LTCPSINV (Sheet 1 of 2)

Field	Subfield or refinement	Entry	Explanation and action
LTCNAME		see subfields	Line trunk controller name. This field contains subfields XPMTYPE and XPMNO.
	XPMTYPE	SMA	Peripheral module type. Enter the type of PM. This entry must match what is in LTCINV.
	XPMNO	0-255	Peripheral module number. ***Note:*** Operating company personnel can number the XPMs from 0 to 255 but the total number of tuples in tables LTCINV and LTCRINV combined cannot exceed 210 XPMs. The XPM types can be any combination of types accepted by the two tables.
Note: Memory is allocated as required to allow a maximum sum of 210 tuples in tables LTCINV and LTCRINV combined.			

Base SCM Access (continued)

Datafilling table LTCPSINV (Sheet 2 of 2)

Field	Subfield or refinement	Entry	Explanation and action
PSLNKTAB		see subfields	P-side link table. This field contains subfields PSLINK, PSDATA, AREASELCT, CARRIDX, ACTION, and CONTMARK. Vector from 0-19. ***Note:*** Changes to fields with multiple entries should be made in the PROMPT mode only.
	PSLINK	0-19	P-side link. Enter the P-side port number.
	PSDATA	see subfield	P-side data. Consists of subfield AREASELCT.
	AREASELCT	DS1	Area select. DS1 is entered for DS-1 type interface cards.
	CARRIDX	DEFAULT	Carrier index. Enter the same value for the template name in table CARRMTC. The default value is DEFAULT. The range is NO_YELLOW_ALM, SFB8ZS, ESFB8ZS, ESFZCS or DEFAULT.
	ACTION	Y or N	Action. Enter Y if the carrier should be removed from service when the out-of-service limit for frame, slip, errored-second, or severe errored-second is exceeded. Otherwise, enter N.
	CONTMARK	+ or $	Continuation mark. Enter + when the vector continues on the next line. Otherwise, enter $ to end the vector.
Note: Memory is allocated as required to allow a maximum sum of 210 tuples in tables LTCINV and LTCRINV combined.			

Datafill example for table LTCPSINV

The following example shows sample datafill for table LTCPSINV.

MAP display example for table LTCPSINV

```
LTCNAME                                                    PSLNKTAB
------------------------------------------------------------------
 SMA  0
  (0 DS1 DEFAULT   N) (1 DS1 DEFAULT N)
  (2 DS1 DEFAULT N) (3 DS1 DEFAULT N) (4 DS1 DEFAULT N)
  (5 DS1 DEFAULT N) (6 DS1 DEFAULT N) (7 DS1 DEFAULT N)
  (8 DS1 DEFAULT N) (9 DS1 DEFAULT N) (10 DS1 DEFAULT N)
  (11 NILTYPE ) (12 NILTYPE ) (13 NILTYPE ) (14 NILTYPE)
  (15 NILTYPE ) (16 NILTYPE ) (17 NILTYPE) (18 NILTYPE )
  (19 NILTYPE )$
```

Datafilling table ALMSCGRP

The alarm scan group (ALMSCGRP) table records the circuit equipment, location, and type of circuit card containing scan points.

The following table shows the datafill specific to Base SCM Access for table ALMSCGRP. Only those fields that apply directly to Base SCM Access are shown.

Datafilling table ALMSCGRP

Field	Subfield or refinement	Entry	Explanation and action
SCGROUP		0-255	Scan group. Enter the scan group number.
TMTYPE		alphanumeric	Trunk module type. Enter the type of trunk module where the circuit is mounted.
TMNO		0-255	Trunk module number. Enter the number of the trunk module where the circuit is mounted.
TMCKTNO		0-23	Trunk module circuit number. Enter the trunk module circuit number where the circuit is assigned.
CARDCODE		alphanumeric	Card code. Enter the PEC of the alarm card.

Datafill example for table ALMSCGRP

The following example shows sample datafill for table ALMSCGRP.

Base SCM Access (continued)

MAP display example for table ALMSCGRP

```
SCGROUP TMTYPE TMNO TMCKTNO CARDCODE
-----------------------------------
      0    MTM    1       1   3X82AA
      1    MTM    3       1   3X82AA
      2    MTM    1       7   3X84AA
      3    MTM    1      10   0X10AA
      .     .     .       .      .
      .     .     .       .      .
     15    RSM    1       7   0X10AA
      .     .     .       .      .
      .     .     .       .      .
     21    RMM    2      11   0X10AA
```

Datafilling table ALMSDGRP

Table alarm signal distributor group (ALMSDGRP) records the circuit equipment, location and type of circuit card containing signal distributor points.

The following table shows the datafill specific to Base SCM Access for table ALMSDGRP. Only those fields that apply directly to Base SCM Access are shown.

Datafilling table ALMSDGRP

Field	Subfield or refinement	Entry	Explanation and action
SDGRP		0-255	Signal distributor group. Enter the signal distributor group number.
TMTYPE		alphanumeric	Trunk module type. Enter the type of trunk module where the circuit is mounted.
TMNO		0-255	Trunk module number. Enter the number of the trunk module where the circuit is mounted.
TMCKTNO		0-23	Trunk module circuit number. Enter the trunk module circuit number where the circuit is assigned.
CARDCODE		alphanumeric	Card code. Enter the PEC of the alarm card.

Datafill example for table ALMSDGRP

The following example shows sample datafill for table ALMSDGRP.

MAP display example for table ALMSDGRPxx

```
SDGROUP  TMTYPE  TMNO  TMCKTNO  CARDCODE
-------------------------------------
      0     MTM     1        0    3X82AA
      1     MTM     3        0    3X82AA
      2     MTM     1        6    3X84AA
      4     MTM     1        4    2X57AA
      5     MTM     1        5    2X57AA
      6     MTM     1       18    2X57AA
      7     MTM     1       19    2X57AA
      8     MTM     6       18    2X57AA
      9     MTM     6       19    2X57AA
     10     MTM     9       18    2X57AA
     11     MTM     9       19    2X57AA
     12     RSM     0       22    2X57AA
      8     MTM     6       18    2X57AA
      .       .     .        .       .
     22     MTM    12       18    2X57AA
     23     MTM    12       19    2X57AA
```

Datafilling table ALMSC

The alarm scan (ALMSC) table associates a scan point function with an actual scan point and specifies which SD points should be operated when that scan point is activated.

The LOGIC field for the RDTALRMCO SC point function should always be Y. This indicates the functionality is fixed (in the software) and is not datafilled.

The SCGROUPs must be datafilled in table ALMSCGRP before datafilling scan points. The value for field SCGROUP must be 4 or higher. Although 1 through 3 are valid entries, these numbers are reserved for DMS system scan alarms such as common audible fail and office alarm unit fail.

The following table shows the datafill specific to Base SCM Access for table ALMSC. Only those fields that apply directly to Base SCM Access are shown.

Datafilling table ALMSC (Sheet 1 of 2)

Field	Subfield or refinement	Entry	Explanation and action
FUNCTION		alphanumeric	Function. Enter the alarm function.
SCGROUP		0-255	Scan group. Enter the scan group where the scan point belongs.

Base SCM Access (continued)

Datafilling table ALMSC (Sheet 2 of 2)

Field	Subfield or refinement	Entry	Explanation and action
POINT		0-6	Scan point. Enter the scan point number within the scan group.
NORMALST		0-1	Normal state. Enter the normal state of the scan point. Entry values are 0 (if the scan point is normally off or open) and 1 (if the scan point is normally on or closed).
REPORT		Y or N	Report. Enter Y if an alarm report is to be logged. Otherwise, enter N.
ALM		CR, MJ, MN, or NA	Alarm. Enter the type of alarm to be activated. Entry values are CR (critical alarm), MJ (major alarm), MN (minor alarm), and NA (no alarm).
LOGIC		see subfields	Logic. This field consists of subfields LOGIC, SDFUNCT, ALMGRP, ALMXFR, and CONTMARK.
	LOGIC	Y or N	Logic. Enter Y if the logic associated with the function is fixed. Otherwise enter N.
	SDFUNCT	alphanumeric	Signal distributor function. Enter the signal distributor function or functions associated with a specific scan point.
	ALMGRP	Y or N	Alarm grouping. Enter Y if the alarm function is to be implemented when the alarm grouping key is activated. Enter N if the alarm function is to be implemented at all times, regardless of the alarm grouping key.
	ALMXFR	Y or N	Alarm transfer. Enter Y if the alarm function is to be implemented when the alarm transfer key is activated. Otherwise enter N.
	CONTMARK	+ or $	Continuation mark. Where the record is other than the last for a specific scan point, enter +, which indicates that additional data for the scan point is specified in the next record. Where the record is the last for a specific scan point, enter a dollar sign ($).

Datafill example for table ALMSC

The following example shows sample datafill for table ALMSC.

MAP display example for table ALMSC

```
FUNCTION SCGROUP POINT NORMALST REPORT ALM     LOGIC
-------------------------------------------------------
RDTALRMCO      4     1        0     N   NA       Y $
```

Datafilling table ALMSD

Table alarm signal distributor point (ALMSD) associates a SD point function with an actual SD point. Of the 13 SD point functions, eight are used as indicators, as to which RDT is raising a particular alarm, and three are used as indicators as to the severity of the alarm being raised.

There is a one-to-one relationship between the eight functions and the eight possible enumerated “Which SD" SD points in the SDPOINTS field of table RDTINV.

The AUDIBLE field should always contain an N for the SD points associated with RDT alarms. The table control system enforces this requirement. A Y in this field indicates, an audible alarm cutoff switch should turn the SD points off. This should not be the case for RDT SD points.

The SDGROUPS must be datafilled in table ALMSDGRP before datafilling SD points. The value for field SDGROUP must be 4 or higher. Though 1 through 3 are valid entries, these numbers are reserved for DMS switch alarms such as alarm battery MTM fail.

SD points are electrical relays controlled by DMS switch software. These relays are usually connected to lights, bells, or remote telemetry monitoring devices. To activate SD points in response to RDT alarms, severity-indicating SD points must be datafilled in table ALMSD.

These severity-indicating SD points are the following:

- RDTCRIT—operated when critical alarms are present at a RDT
- RDTMAJOR—operated when major alarms are present at a RDT
- RDTMINOR—operated when minor alarms are present at a RDT

Eight SD point functions are reserved for use by RDT alarm handling software to indicate which RDT has an alarm. These “Which-RDT" SD point functions are RDTSD1 through RDTSD8:

Base SCM Access (continued)

The SD points are used to indicate which RDT has the alarms shown by the severity-indicating SD points. Each RDT can be set to activate a unique combination of SD points by datafilling the combination in field SDPOINTS in table RDTINV.

Additional SD point functions now exist; RDTACO and RDTWARN. When RDTACO is active, it indicates there are active RDT alarms not displayed, because the alarm cutoff function is enabled.

RDTWARN is activated by software alarm RDTWRN. RDTWRN is similar to software alarms RDTCRT, RDTMJ, and RDTMN. RDTWARN is automatically datafilled in table SFWALARM during initial program load, and is set to activate by default.

Once datafilled, RDTWARN *cannot* be deleted from table ALMSD, unless it is first removed from the logic of table SFWALARM. RDTWARN indicates the presence of warning level alarms at the RDT RDTWARN is similar to other severity-indicating RDT SD points: RDTCRIT, RDTMAJOR and RDTMINOR.

> ***Note:*** RDTACO and RDTWARN are optional. They do not need to be datafilled before SD points are datafilled in table RDTINV.

SD points RDTACO and RDTWARN can only be datafilled if there are available circuits on SD circuit cards NT2X57.

The next table shows datafill specific to Base SCM Access for table ALMSD. Only those fields that apply directly to Base SCM Access are shown.

Datafilling table ALMSD (Sheet 1 of 2)

Field	Subfield or refinement	Entry	Explanation and action
FUNCTION		alphanumeric	Function. Enter the alarm function. The entry is alphanumeric, up to 16 characters. RDTACO and RDTWARN are new functions.
SDGROUP		0-255	Signal distributor group. Enter the signal distributor group where the SD point belongs. For SD points RDTACO and RDTWARN, SDGROUP should be 4 or higher. 0-3 are reserved for system alarms.
POINT		0-7	Signal distributor point. Enter the SD point number within the signal distributor group.

Datafilling table ALMSD (Sheet 2 of 2)

Field	Subfield or refinement	Entry	Explanation and action
NORMALST		0-1	Normal state. Enter the normal state of the SD point. Entry values are 0 (if the SD point is off, or open, normally) and 1 (if the SD point is on, or closed, normally). For RDTACO and RDTWARN SD points, 0 is appropriate.
AUDIBLE		Y or N	Audible. Enter Y if the signal distributor point is to be reset when the audible alarm reset key is operated. Otherwise, enter N. RDTACO and RDTWARN SD points are not allowed to be audible. Only N is acceptable for these values.
LAMPTEST		Y or N	Lamp test. Enter Y if the SD point is to be included in the lamp test. Otherwise, enter N.

Datafill example for table ALMSD

The following example shows sample datafill for table ALMSD.

MAP display example for table ALMSD

```
FUNCTION SDGROUP POINT NORMALST AUDIBLE LAMPTEST
-----------------------------------------------
RDTSD1        4      1        0       N        Y
RDTSD2        4      2        0       N        Y
RDTSD8        4      3        0       N        Y
RDTACO        4      4        0       N        Y
RDTWARN       4      5        0       N        Y
```

Datafilling table DCHINV

The D-channel handler inventory (DCHINV) table describes the physical, service, and channel allocation characteristics of enhanced D-channel handlers provisioned in the SMA. The inventory information includes the following:

- DCH identification number
- type and number of the host PM
- product equipment code of the DCH

Base SCM Access (continued)

- load file name of the DCH
- port used by the DCH

The next table shows the datafill specific to Base SCM Access for table DCHINV. Only those fields that apply directly to Base SCM Access are shown.

Datafilling table DCHINV

Field	Subfield or refinement	Entry	Explanation and action
DCHNO		0-255	D-channel handler number. Enter the external identification number used by the system to represent a specific D-channel handler.
PMTYPE		SMA	Peripheral module type. Enter the PM type where the DCH is located.
PMNO		0-255	Peripheral module number. Enter the PM number of the SMA in which the DCH is located.
DCHPEC		NTBX02BA	DCH product engineering code. Enter the PEC of the DCH card. For SMA enter NTBX02BA.
LOAD		alphanumeric	Load file name. Enter the DCH load name.
PORT		0-19	DS1 port. Enter the DS-1 port number used by the DCH. ***Note:*** DCH ports are datafilled sequentially beginning with port 19 and working backwards, using the odd-numbered ports.

Datafill example for table DCHINV

The following example shows sample datafill for table DCHINV

MAP display example for table DCHINV

```
DCHNO     PMTYPE  PMNO     DCHPEC      LOAD      PORT
------------------------------------------------------------
0         SMA     0        BX02BA     EDH81AZ    17
1         SMA     0        BX02BA     EDH81AZ    19
```

Datafilling table ISGDEF

The ISDN service group definition (ISGDEF) table contains information on ISG numbers, the PM type, the services provided, and the allocation of services channels.

The following table shows the datafill specific to Base SCM Access for table ISGDEF. Only those fields that apply directly to Base SCM Access are shown.

Datafilling table ISGDEF (Sheet 1 of 2)

Field	Subfield or refinement	Entry	Explanation and action
ISGNO		0-255	ISDN service group number. Enter the identification number used to assign the D-channel to a DCH.
PMTYPE		SMA	Peripheral module type. Enter the PM that supports DCH services.
PMNO		0-255	Peripheral module number. Enter the PM number of the SMA where the DCH is located.
SERVICE		BRA or PD	Enter the services provided by the ISDN service group. Up to three entries are allowed; use a $ sign to terminate this field if fewer than three entries are made.

Base SCM Access (continued)

Datafilling table ISGDEF (Sheet 2 of 2)

Field	Subfield or refinement	Entry	Explanation and action
CHNLTAB		see subfields	Channel information. This field is a vector with up to 32 entries specifying the functions of each channel. It is comprised of subfields DCHNL and CHNLTYPE. Use a dollar sign ($) sign to terminate this field if fewer than 32 entries are made. ***Note:*** All BD channels must be assigned in descending order starting at 31, while BRA channels are assigned in ascending order starting at 0. Therefore, the order of datafill for BD and BRA channels is restricted as follows: For one night process (ONP), the warning message "`BD channels must be higher than any BRA channels`" is displayed to inform operating company personnel of the incorrect data ordering in the tuple transferred. However, the tuple is accepted by the table on the new side. For non-ONP, the error message "`BD channels must be higher than any BRA channels`" is displayed to inform operating company personnel of the incorrect data ordering in the tuple and the tuple is rejected.
	DCHNL	0-31	D-channel. Enter the external identifier for the D-channel.
	CHTYPE	see subfield	Channel type. This field consists of subfield CHNLTYPE and refinements.
	CHNL-TYPE	NIL, RESERVED, BRA or BD	Channel type. Enter the service the D-channel provides.

Datafill example for table ISGDEF

The following example shows sample datafill for table ISGDEF.

MAP display example for table ISGDEF

```
ISGNO  PMYTPE  PMNO  SERVICE
                                                  CHNLTAB
-------------------------------------------------------
4         SMA    2              (BRA)$
    (0 RESERVED ) (1 BRA ) (2 BRA ) (3 BRA ) (4 BRA )
(5 BRA ) (6 BRA ) (7 BRA ) (8 BRA ) (9 BRA ) (10 BRA )
(11 BRA ) (12 BRA ) (13 BRA ) (14 BRA ) (15 BRA )
(16 BRA ) (17 BRA ) (18 BRA ) (19 BRA ) (20 BRA )
(21 BRA ) (22 BRA ) (23 BRA ) (24 BRA ) (25 BRA )
(26 BRA ) (27 BRA ) (28 BRA ) (29 BRA ) (30 BRA )
(31 BRA ) $
```

Datafilling table LTGRP

Table logical terminal group (LTGRP) defines up to 32 logical terminal groups. One group is permanently defined as ISDN and cannot be deleted.

Other group names may be defined in alpha-numeric combinations of eight characters. Each group supports up to 1022 logical terminal identifiers for a table total of up to 32,704 logical terminal identifiers (32 x 1022).

Note: A logical terminal group must be entered in this table before logical terminals can be specified in other tables.

The following table shows the datafill specific to Base SCM Access for table LTGRP. Only those fields that apply directly to Base SCM Access are shown.

Datafilling table LTGRP (Sheet 1 of 2)

Field	Subfield or refinement	Entry	Explanation and action
GROUP		alphanumeric	Logical terminal group. Enter the name of the logical group of terminals.

Base SCM Access (continued)

Datafilling table LTGRP (Sheet 2 of 2)

Field	Subfield or refinement	Entry	Explanation and action
GROUPNO		0-31	Group number. Enter a number that corresponds to the group name. The default number for logical terminal group ISDN is 0. For data packet network terminal groups, enter a number between 1-15.
OPTIONS		SAPI16 or $	Options. Enter SAPI16 for packet or circuit switched terminals. If the SAPI16 option is not specified, no packet-switched terminals can be datafilled for the group.

Datafill example for table LTGRP

The following example shows sample datafill for table LTGRP.

MAP display example for table LTGRP

```
GROUP  GROUPNO                          OPTIONS
-------------------------------------------------------
ISDN       0                             (SAPI16)
SMA1       1                             (SAPI16)
```

Datafilling table LTDEF

Table logical terminal definition (LTDEF) defines logical terminals and terminal access privileges. A logical terminal can have the following access privileges:

- voice and circuit-switched data on a B-channel (B).
- low-speed packet-switched data on a D-channel (D).
- high-speed packet data on a B-channel (PB).
- combined circuit-switched and D-channel packet data (BD).
- 2-B circuit switching (2B).

Base SCM Access (continued)

Entries for Base SCM Access for table LTDEF appear in the following table. The fields that apply directly to Base SCM Access appear.

Datafilling table LTDEF (Sheet 1 of 3)

Field	Subfield or refinement	Entry	Explanation and action
LTKEY		refer to subfields	Logical terminal key.
	LTGRP	alphanumeric	Logical terminal group. Enter the logical terminal group. The system already defined the group ISDN.
	LTNUM	0-1022	Logical terminal number. Enter a logical terminal number.
LTAP		B, D, BD, PB, 2B	Logical terminal access privilege. Enter one of the following access privileges: • B for circuit-switching. • D for D-channel packet-switching. • BD for combined circuit-switching. • D-channel packet-switching. • PB for B-channel packet switching. • 2B for 2B circuit switching. ***Note:*** Functional sets use the BD. The ISDN Meridian feature transparency (MFT) uses B.
LTCLASS		BRAFS or BRAMFT	Logical terminal class of service. Enter a set of services for the logical terminal. Range is BRAFS for BRA functional sets, and BRAMFT for functional terminals.
	OPTION	refer to list of options.	This field contains a list of assigned options. The value given to the field LTCLASS is the base of these options. The BRAFS options are SPIDSFX, CACH, DEFLTERM, NOVOICE, NOVBD, NOCMD, NOPMD, DTEI, SPIDSPX, EKTS, PVC, UATEI and UNATEI. The BRAMFT options are DTEI, SPIDSFX, UATEI and PVC.

Base SCM Access (continued)

Datafilling table LTDEF (Sheet 2 of 3)

Field	Subfield or refinement	Entry	Explanation and action
		CACH	Call appearance handling feature. Enter CACH to enable CACH. Enter EKTS if you require this option.
		EKTS	Electronic key telephone service. Enter EKTS to indicate electronic key telephone service.
		NOCMD	No circuit mode data calls. Enter NOCMD if the system does not allow circuit mode data calls.
		DEFLTERM	Default logical terminal. A telephone can have a default service profile. A telephone with this profile does not require a download of service profile. If a telephone with this profile is present, enter DEFLTERM. A non-initializing terminal is an example of a telephone with a default service profile.
		NOPMD	No packet mode data calls. Enter NOPMD if the system does not allow packet mode data calls.
		NOVBD	No voice band data calls. Enter NOVBD if the system does not allow voice band data calls.
		NOVOICE	No voice calls. Enter NOVOICE if the system does not allow voice calls.
	SPIDSFX	refer to subfield	Service profile identifier suffix. This field consists of subfield SPID_SUFFIX.
	SPID-SUFFIX	numeric	Service profile identifier suffix. Enter a name that identifies the subscriber on a dynamic terminal endpoint identifier (TEI) terminal.
		DTEI	Dynamic terminal endpoint identifier. Enter DTEI. The system requires an entry in this field if you enter subfield SPIDSFX.
	PVC	see subfields	Protocol version control. This field consists of subfields VERSION and ISSUE.
	VERSION	FUNC_ TIONAL	Protocol version. Enter the protocol version.

Datafilling table LTDEF (Sheet 3 of 3)

Field	Subfield or refinement	Entry	Explanation and action
	ISSUE	0 or 1	Protocol issue. Enter the protocol issue designated for the specified logical terminal. Enter 0 for stimulus and MFT protocols or 1 for BellCore functional protocol.
		UATEI	User-assigned terminal endpoint identifier. Enter the dynamic user-assigned terminal endpoint identifier if necessary.

Entry example for table LTDEF

Sample entries for table LTDEF appear in the following example.

MAP display example for table LTDEF

```
LYKEY    LTAP                                  CLASSREF
-------------------------------------------------
SMA       B
BRAFS    (NOPMD)   (PVC FUNCTIONAL 0)    $
```

Datafilling table SPECCONN

Table special connection (SPECCONN) allows you to set up special-service connections that require dedicated nailed-up connections through the DMS-100 switch. Operating company personnel set up and maintain the special-service connections through software. Physical hard-wired connections does not set up or maintain the connections. When the connections are set up, the connection remains until operating company personnel remove the connection from table SPECCONN.

The entries for Base SCM Access for table SPECCONN appear in the following table. Only fields that apply directly to Base SCM Access appear.

Datafilling table SPECCONN (Sheet 1 of 4)

Field	Subfield or refinement	Entry	Explanation and action
ENDPT1		refer to subfield	Endpoint 1. Subfield SCSEL specifies endpoint 1.
	SCSEL	DS1, ISLC or DCHCHNL	Special connection selector. Enter the type of selector for endpoints.

Base SCM Access (continued)

Datafilling table SPECCONN (Sheet 2 of 4)

Field	Subfield or refinement	Entry	Explanation and action
	DCHCHNL	refer to subfields	The DCH channel. Refer to subfields ISGNO and CHNL.
	ISGNO	0 to 255	The D-channel handler number. Enter the D-channel handler identifier.
	CHNL	0 to 31	Channel number. Enter the D-channel on the D-channel handler.
	DS1	refer to subfields	The DS1. Refer to subfields PMTYPE, SMANO, SMACKTNO, and SMACKTTS.
	PMTYPE	SMA	Peripheral module type. Enter the type of PM.
	SMANO	1-511	The SMA number. Enter the external number of the SMA.
	SMACKTNO	0-19	The SMA circuit number. Enter the P-side port number on the SMA.
	SMACKTTS	1-24	The SMA time slot. Enter the time slot (channel) on the DS-1.
	ISLC	refer to subfields	The ISDN line card. Refer to subfields LEN and CHANNEL.
	LEN	refer to subfields	Line equipment number. This field contains the following subfields: SITE, RDTFRAME, RDTUNIT, RDTSHELF and RDTSLOT.
	SITE	alphanumeric	Site. Enter the location of the RDT (four-character alphanumeric). This entry is not optional. Do not assign a default value to the entry.
	RDT FRAME	0-511	THe RDT frame. Enter the RDT frame number. The frame number is not a physical frame. The frame number is a software entity. The frame number represents the group the RDT belongs to at the site.
	RDT UNIT	0-9	The RDT unit. Enter the number that represents the RDT unit in the group.
	RDT SHELF	0-6	The RDT shelf. Enter the shelf number location of the RDT.

Datafilling table SPECCONN (Sheet 3 of 4)

Field	Subfield or refinement	Entry	Explanation and action
	RDT SLOT	1-99	The RDT slot. Enter the slot number where the RDT resides.
CHNL		B1 or B2	Channel. Enter the ISDN line card channel.
CONTYPE		CAB, CON or PEND	Connection type. Enter CAB for A-bit and B-bit signaling connected. Enter CON for connected. Enter PEND for pending.
STATUS		ACTIVE	Connection status. Enter the status of the connection.
ENDPT2		refer to subfield	Endpoint 2. Subfield SCSEL specifies endpoint 2.
	SCSEL	DS1, ISLC or DCHCHNL	Special connection selector. Enter the type of selector for endpoints.
	DCHCHNL	subfields	The DCH channel. Refer to subfields ISGNO and CHNL.
	ISGNO	0 to 255	The D-channel handler number. Enter the D-channel handler identifier.
	CHNL	0 to 31	Channel number. Enter the D-channel on the D-channel handler.
	DS1	refer to subfields	The DS1. Refer to subfields PMTYPE, SMANO, SMACKTNO and SMACKTTS.
	PMTYPE	SMA	Peripheral module type. Enter the type of PM.
	SMANO	1-511	The SMA number. Enter the external number of the SMA.
	SMACKTNO	0-19	The SMA circuit number. Enter the P-side port number on the SMA.
	SMACKTTS	1-24	The SMA time slot. Enter the time slot (channel) on the DS-1.
	ISLC	refer to subfields	The ISDN line card. Refer to subfields LEN and CHANNEL.

Base SCM Access (continued)

Datafilling table SPECCONN (Sheet 4 of 4)

Field	Subfield or refinement	Entry	Explanation and action
	LEN	refer to subfields	Line equipment number. This field contains the subfields: SITE, RDTFRAME, RDTUNIT, RDTSHELF and RDTSLOT.
	SITE	alphanumeric	Site. Enter the location of the RDT (four-character alphanumeric). This entry is not optional. A default value is not assigned to this entry.
	RDT FRAME	0-511	The RDT frame. Enter the RDT frame number. The RDT is not a physical frame. The RDT is a software entity. The RDT represents the group the RDT belongs to at the site.
	RDT UNIT	0-9	The RDT unit. Enter the number that represents the RDT unit in the group.
	RDT SHELF	0-6	The RDT shelf. Enter the shelf number where the RDT resides.
	RDT SLOT	1-99	The RDT slot. Enter the slot number where the RDT resides.
CHNL		B1 or B2	Channel. Enter the ISDN line card channel.
CONTYPE		CAB, CON, or PEND	Connection type. Enter CAB for A-bit and B-bit signaling connected. Enter CON for connected. PEND for pending.
STATUS		ACTIVE	Connection status. Enter the status of the connection.

Datafill example for table SPECCONN

Sample datafill for table SPECCONN appears in the following example.

MAP display example for table SPECCONN

```
FIELD NAME  FIELD VALUE
------------------------------------------------------
DCHCHNL 1 28 DS! SMA 0 0 1 CON ACTIVE
DCHCHNL 1 29 DS1 SMA 0 0 2 CON ACTIVE
ISLC DURH 1 0 0 16 B1 DS1 SMA 0 1 9 CON ACTIVE
ISLC DURH 1 0 0 18 B2 DS1 SMA 0 1 10 CON ACTIVE
```

Datafilling table RDTINV

The remote digital terminal inventory (RDTINV) table contains inventory data. This data includes RDTs. This data includes IDTs in the DMS-100 switching office that correspond to the RDTs. This table also contains the C-side connectivity information and RDT configuration information.

Note: Remote digital terminal (RDT) is a generic term. An exact type of RDT is the S/DMS AccessNode remote fiber terminal (RFT). In an integrated S/DMS AccessNode configuration, the name RDT always means RFT.

The FCOT has 14 C-side links. If two DS-1 mapper cards are present, 28 C-side links are present. The SMA supports a maximum of 20 P-side links. A maximum of eight RDTs can be associated with one SMA.

If an ISDN, a maximum of five RDTs can be associated with one SMA. When an RDT is added to table RDTINV, DMS SuperNode switch software creates an IDT in the SMA. This IDT corresponds to the RDT.

The deletion of an RDT from table RDTINV, deletes the IDT that corresponds to that RDT. Table RDTINV creates an RDT as a remote to the DMS SuperNode switch. Table RDTINV defines the attributes of the RDT.

RFT line capacity changes

Issues that affect RFT line capacity changes Changes to other fields in table RDTINV are not allowed while changing the SHELFSLT field. If other changes to table RDTINV are attempted while SHELFSLT is being changed, an error message is displayed informing operating company personnel that field SHELFSLT cannot be changed while other fields are being changed.

Note: Before you change the line capacity of an RFT, enter the QUERYPM command at the IDT level to display the total number of lines allocated to an SMA and the number of lines on the posted IDT.

The SHELFSLT value is a four-digit number of which only the second is a variable. The other three are constants. If any attempt is made to change these values, a warning message displays.

Example of a MAP response

```
WARNING: minslot and minshelf are being changed to 1 and maxslot
is being changed to 96.
```

Base SCM Access (continued)

How to increase the line capacity of an RFT Before you increase the line capacity of an RFT, the SMA that connects the RFT to the SuperNode switch must be put in the manually busy (ManB) state using the command string BSY PM FORCE. Any attempt to increase the line capacity of an RFT in any other state results in an error message being displayed that informs operating company personnel that the SMA must be ManB or Offl to change field SHELFSLT.

ATTENTION

When increasing the line capacity of an RFT using the command string BSY PM FORCE, conduct this activity during periods of low traffic. This is because active calls will be dropped and all RFTs connected to the SMA will be viewed as CBsy by the SuperNode switch.

Before you increase the line capacity of an RFT, verify that all DTA connections are released for the RFT to be resized. The line capacity of an RFT cannot be increased when DTA lines are equipped or connected. Refer to the procedure “How to release digital test access (DTA) connections" that follows to determine if DTA connections exist and how to release them.

Note: If DTA connections are not released, SMA P-side channels get “hung." These “hung" channels could result in a complete loss of call processing for the RFT that is to have the line capacity increased.

How to release digital test access (DTA) connections The following steps must be followed to determine if DTA connections exist on the RFT and to release DTA connections.

At a MAP terminal

1 Access the LTP level by typing

```
>MAPCI;MTC;LNS;LTP
```

and pressing the Enter key.

2 Access the LTPDATA sublevel by typing

```
>LTPDATA
```

and pressing the Enter key.

3 Determine if DTA connections are equipped by typing

```
>EQUIP DTA QUERY ALL
```

and pressing the Enter key.

Example of a MAP response

```
MTR EQUIP    US  DS    CONNECT     CHNL   STAT
   ------------------------------------------------
      1 HOST 04 0 01 12 B1 B2
```

If any DTA equipment is reserved, an equipment number and line equipment number (LEN) will be listed under the MTR and EQUIP headings as seen in the previous example. If a DTA connection exists, a LEN will be listed under the CONNECT, CHNL, and STAT headings.

Perform steps 4 and 5 to release the DTA connection and reset the DTA equipment. If there are no DTA connections on the RFT, go to step 6.

4 To release the DTA equipment

>CONNECT eqno RLS

where eqno
is the equipment number given in response to the command string EQUIP DTA QUERY ALL

5 To reset the DTA connection

>EQUIP DTA RESET eqno

where eqno
is the equipment number given in response to the command string EQUIP DTA QUERY ALL

Note: This step is only needed if DTA equipment is reserved and a connection does NOT exist. You must release the DTA connection before you reset the DTA equipment.

6 You have successfully completed this procedure.

Methods for changing the line capacity of an RFT In this section procedures for changing the line capacity of an RFT are presented. There are two methods for increasing and one method for decreasing the line capacity of an RFT.

The two methods to increase the line capacity of an RFT:

- method 1 - use two MAP terminals
- method 2 - prepare a read (store) file. This store file is a compilation of all the actions in the first method. The read file is then executed as a single activity. This method eliminates the natural delays imposed by manually entering the commands.

Method 1 - use two MAP terminals Method 1 requires operating company personnel to control two MAP windows. It consists of the steps that follow.

Note: Operating company personnel should have both MAP terminals available and do as much pre-typing as possible to reduce the time it takes to increase the line capacity of an RFT. The pre-typing activity can be done

Base SCM Access (continued)

in table RDTINV up to the point of adding the data presented in steps 2 and 3 of method 1.

ATTENTION

Before you increase the line capacity of an RFT, verify that all DTA connections are released for the RFT to be resized. The line capacity of an RFT cannot be increased when DTA lines are equipped or connected. Refer to the procedure “How to release digital test access (DTA) connections" to determine if DTA connections exist and how to release them.

Perform the following steps to increase the line capacity of an RFT.

Note: Before you change the line capacity of an RFT, enter the QUERYPM command at the IDT level. You can use the QUERYPM command to display the total number of lines connected to an SMA and the number of lines on the posted IDT.

At MAP terminal 1

1 Post the SMA that connects to the RFT that is to have its line capacity increased by typing

```
>MAPCI;MTC;PM;POST SMA sma_no
```

and pressing the Enter key.

where

sma_no
is the number of the SMA to be posted

```
At MAP terminal 2
```

2 Position on the affected RFT in table RDTINV by typing

```
>TABLE RDTINV;FORMAT PACK;POS rdtname
```

and pressing the Enter key.

where

rdtname
consists of the site, frame, and unit number of the RFT datafilled in table RDTINV, for example, RFT1 0 0

3 Change the value of subfield SHELFSLT by typing

```
>CHA VARTYPE
```

and pressing the Enter key.

The following confirmation message appears

```
Enter Y to continue processing or N to quit.
```

a If you wish to continue, respond to this message by typing

>Y

b and pressing the Enter key.

c Respond to the MAP terminal response as follows:

```
>RDTVAR
```

d Press the Enter key.

```
>SHELFSLT
```

e Respond to the MAP terminal response by entering the new SHELFSLT value

>newshelfslot value

f and pressing the Enter key.

where

newshelfslot value
is the new RFT shelf size to be entered in table RDTINV, field SHELFSLT.

Note: You may respond to the request to confirm in order to verify that all DTA connections are released. If the system responds that DTA connections exist, respond by typing “N" to reject the request. Then proceed to the procedure “How to release digital test access (DTA) connections" earlier in this section. However, if the system responds that the SMA is InSv, proceed to step 4. Do not enter “Y" to confirm until directed to do so in step 5.

```
At MAP terminal 1
```

4

ATTENTION
Do not proceed to step 5 until both units are in the ManB state.

a and pressing the Enter key.

b The following confirmation message appears

```
This action will take this pm and all of its subtending
nodes out of servicePlease confirm (“Yes", “Y", “No",
or “N"):
```

c If you wish to continue, respond to this message by typing

>Y

5 and pressing the Enter key.

Note: At this point the SMA is ManB and any calls that are active on RFTs are taken down and an outage occurs.

```
At MAP terminal 2
```

Base SCM Access (continued)

6

ATTENTION

Do not proceed to step 6 until the “Tuple changed" message is received at the MAP terminal.

Ensure step 4 at MAP terminal 1 is complete by noting that both units are ManB before proceeding with this step. Respond “Y" to confirm the change to SHELFSLT by typing

>Y

and pressing the Enter key.

`At MAP terminal 1`

7 Return to service the ManB SMA by typing

>RTS PM FORCE

and pressing the Enter key.

At this point the SMA returns to service and the state of the IDTs change from CBsy to InSv.

You have successfully completed this procedure.

Method 2 - prepare a store file Method 2 requires operating company personnel to prepare a store file that contains the steps of method 1. The advantage of method 2 is that outage time is reduced by removing the delays associated with manually entering commands on two MAP terminals.

ATTENTION

Before you increase the line capacity of an RFT, verify that all DTA connections are released for the RFT to be resized. The line capacity of an RFT cannot be increased when DTA lines are equipped or connected. Refer to the procedure titled “How to release digital test access (DTA) connections" presented earlier in this section to determine if DTA connections exist and how to release them.

Note 1: If DTA connections are not released, SMA P-side channels get “hung." These “hung" channels could result in a complete loss of call processing for the RFT that is to have the line capacity increased.

Note 2: Before changing the line capacity of an RFT, enter the QUERYPM command at the IDT level to display the total number of lines connected to an SMA and the number of lines on the posted IDT.

Perform the following steps to create a store file used to increase the line capacity of an RFT:

At the CI level

1 Access the store file editor by typing

`>Edit <filename>`

and pressing the Enter key.

where

filename
is the name you choose for the store file.

2 Enter information into the store file by typing

`>Input`

and pressing the Enter key.

3

CAUTION
Entering incorrect values may result in an outage longer than planned.
When compiling this store file, ensure all values are correct and entered correctly. If incorrect values are entered, an outage of longer duration than planned could result.

Enter the content of the store file as follows:

a **>MAPCI NODISP;MTC;PM;POST SMA sma_no**

and press the Enter key.

where

sma_no
is the number of the SMA connected to the RFT to be upsized.

b **>BSY PM FORCE**

and press the Enter key. This command manually busies the SMA.

c **>Y**

and press the Enter key.

d **>TABLE RDTINV;FORMAT PACK;POS rdtname**

and press the Enter key.

where

rdtname
consists of the site, frame, and unit number of the RFT datafilled in table RDTINV, for example, RFT1 0 0

e **>CHA VARTYPE**

and press the Enter key.

Base SCM Access (continued)

f **>Y**

and press the Enter key.

g Enter the existing value entered in field RDTVAR, for example

>RFT

and press the Enter key.

h **>newshelfslot value**

where

newshelfslot value
is the new RFT shelf size to be entered in table RDTINV, field SHELFSLT.

and press the Enter key.

i Enter the response to the system confirmation message asking you to confirm the change to SHELFSLT as

>Y

and press the Enter key.

j **>QUIT**

and press the Enter key.

k **>ABORT**

and press the Enter key.

Enter the ABORT command to abort any system responses to incorrect data entry. The ABORT command prevents situations that may arise when the DMS switch prompts the user for correct data in response to incorrect data that was entered in the store file. Entering incorrect data prevents the SMA from returning to service and may prolong the planned outage.

and press the Enter key. This command returns the SMA to service.

l **>RTS PM FORCE**

and press the Enter key. This command returns the SMA to service.

m **>QUIT ALL**

4 After typing the information in step 3 as the store file, press the Enter key twice to stop editing the store file.

5 Save the store file by typing

`>file SFDEV`

and pressing the Enter key.

where

filename
is the name of the store file input in step 1.

6 List the store file by typing

`>listsf`

and pressing the Enter key. This command lists all the store files in the SFDEV the user created.

7

ATTENTION

When you activate the store file, the SMA is put in the ManB state. Any calls that are active on RFTs connected to the SMA are taken down and an outage occurs. Therefore, conduct this activity during periods of low traffic.

Activate the store file to increase the line capacity of the RFT by typing

```
>read <filename>
```

and pressing the Enter key.

where

filename
is the name of the store file to be activated.

This command runs the store file.

8 After the store file has run and the line capacity of the RFT was successfully increased, you may wish to delete the store file. Delete the store file by typing

```
>erasesf <filename>
```

and pressing the Enter key.

where

filename
is the name of the store file to be deleted.

9 You have successfully completed this procedure.

How to decrease the line capacity of an RFT If the line capacity of an RFT is being decreased, the SuperNode switch determines if any LENs are present above the new (lowered) value datafilled in table RDTINV field SHELFSLT. If any LENs are present above the new value, an error message displays informing operating company personnel that the line capacity of the RFT cannot be decreased because there are currently LENs provisioned above the new provisioned value.

Decreasing the line capacity of an RFT is accomplished at one MAP terminal and no outage occurs. When decreasing the line capacity, table LNINV must be verified to ensure the required number of lines are deleted before allowing an update to table RDTINV, field SHELFSLT. Prior to deleting a tuple from table LNINV, the lines will be cleared from other tables such as IBNLINES, KSETLINE, KSETINV, LENLINES, and SPECCONN. Although table RDTLT will be updated after table LNINV, because of provisioning delays,

Base SCM Access (continued)

tuples deleted from table LNINV may still be present in table RDTLT and will need to be checked.

Note: When decreasing the line capacity of an RFT, a decrease in the value of the SHELFSLT field in table RDTINV is allowed only after all LENs that reside above the new (lowered) SHELFSLT value have been removed.

Perform the following procedure to decrease the line capacity of an RFT.

At the MAP terminal

1 Position on the affected RFT in table RDTINV by typing

`>TABLE RDTINV;FORMAT PACK;POS rdtname`

and pressing the Enter key.

where

rdtname
consists of the site, frame, and unit number of the RFT datafilled in table RDTINV, for example, RFT1 0 0

2 Change the value of subfield SHELFSLT by typing

`>CHA VARTYPE`

and pressing the Enter key.

The following confirmation message appears

```
Enter Y to continue processing or N to quit.
```

If you wish to continue, respond to this message by typing

`>Y`

and pressing the Enter key.

Respond to the MAP terminal response as follows:

```
>RDTVAR
```

Press the Enter key.

```
>SHELFSLT
```

Respond to the MAP terminal response by entering the new SHELFSLT value

`>newshelfslot value`

and pressing the Enter key.

where

>newshelfslot value
is the new RFT shelf size to be entered in table RDTINV, field SHELFSLT.

Confirm the new SHELFSLT entry into table RDTINV by typing

`>Y`

and pressing the Enter key.

3 You have successfully completed this procedure.

Assigning DS-1 links in a multi-host environment

In a multi-host environment, each RFT network element can connect to a maximum of three S/DMS hosts. Office parameters OFFICE_CLLI_NAME and NETWORK_ELEMENT_ID in table OFCENG define the host. These names and IDs must be different for each host.

CAUTION
Loss of service
For an IDLC, a data mismatch of DS-1 logical link numbers results in slow dial tone and loss of speech path.

The datafill in table RDTINV must correspond to the facility assignments for the network element done in the operations controller (OPC). The first two links assigned to the host office automatically become logical links 1 and 2. These links carry the common signaling channel (CSC) and embedded operations channel (EOC) messaging.

Logical DS-1 link numbers are assigned in field LINKTAB. Logical DS-1 link numbers for the network element are assigned in the OPC facility manager. These link numbers *must* be the same for each physical link to allow switch services level continuity between the SMA and the RFT.

Note: When you provision the RFTs, consider how the DS-1 links are mapped to the SMA. To create reliability, the primary and secondary messaging links must be on separate NT6X50 cards in the SMA. From the RFTs point of view, hardcode the primary and secondary messaging links as C-side links 1 and 2.

The logical links are numbered from 1 to 20. The physical link numbers are not the same. For the SMA, the physical links are numbered 0 to 19.

For the network element, the links are numbered 1 to 14, for each DS-1 mapper card. Refer to the following example for a diagram of to logical link assignments between the SMA and RFT.

Note: The OPC must reflect first entry and subsequent changes to SMA logical links.

Base SCM Access (continued)

Physical to logical link assignment

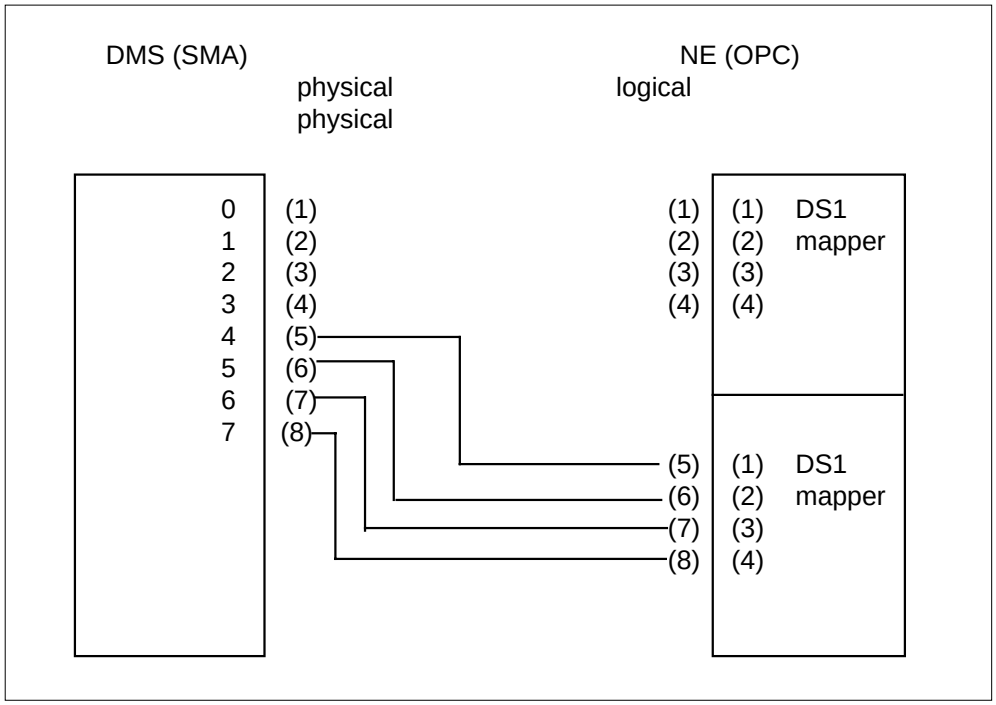

Each FCOT and RFT network element requires a different number. A different SMA in the same switch cannot reuse the network element number.

You cannot assign a network element number of 5, 05, 005 or 0005 to all network elements. Do *not* assign these values to network elements (FCOT or RFT) that interface a DMS SuperNode switch that runs at BCS35 or lower. Network element 5 is the network element number assigned to the associated DMS SuperNode switch in an IDLC configuration. You cannot use network element 5 with this product release.

Refer to the following figure for an example of FCOT and RDT numbering. The SMA 0 has eight point-to-point systems with network elements that number 1 through 16. The SMA 1 has eight point to point systems with network elements that number 17 through 32.

FCOT and RFT network numbering

SMA 0 System number	FCOT number	RFT number
1	1	2
2	3	4
3	5	6
4	7	8
5	9	10
6	11	12
7	13	14
8	15	16
SMA 1		
9	17	18
10	19	20
11	21	22
12	23	24
13	25	26
14	27	28
15	29	30
16	31	32

Engineering LAPD parameters

The link access procedure on the D-channel (LAPD) is a flow-control mechanism for the EOC and CSC. The LAPD consists of a sliding window K. This window limits the number of frames that remain at one time. The LAPD also consists of the receiver-not-ready (RNR) messages one peer can send to the other peer. This message indicates the sender cannot accept incoming data.

Note: The SMA operates at best production when the LAPD parameters are set to default values. Leave the default values in place unless an important reason to change one of these parameters is present.

To alter the LAPD parameters, change the two parameters on both ends together. The two ends are RFT and DMS. Use the guidelines that appear in

Base SCM Access (continued)

the following table. The values given are the *default* values for the CSC and EOC.

Default LAPD parameters (Sheet 1 of 2)

Parameter	CSC	EOC	Description
K	7	7	Indicates maximum number of remaining unacknowledged frames that remain. The range is 1-128. Indicates LAPD window size. The LAPD state window must maintain a maximum of K messages in memory that awaits acknowledgment from the far end. An increase in the value of K increases the use of resources in the enhanced ISP (EISP). If the value of K doubles for each RDT EOC link, the number of EOCs (RFT) that the SMA supports can require a 50% decrease.
N200	3	3	Indicates maximum number of frame retransmissions that can occur. The range is 1-8.
N201	52	256	Indicates maximum number of octets that the information field of an information frame can contain. The range is 1-256. As N201 increases, the maximum message size increases. The amount of memory which messages, that the LAPD protocol buffers consumes can increase. The amount of increase depends on the accurate length of the messages on the link and the maximum length given for N201. For SMAs that support MBS terminals, the N201 value must have a minimum value of 52 to support the MBS opcode messages. This is the default when the RDT is a S/DMS AccessNode.

Default LAPD parameters (Sheet 2 of 2)

Parameter	CSC	EOC	Description
T200	250 ms	250 ms	Indicates maximum length of time in milliseconds (ms) a data link layer entity waits for admission (time-out) of a transmitted frame. The range is 100-250 ms. Changes in these values only have an important impact if the LAPD link experiences link faults that result in message retransmissions. The LAPD installation must arrange potential outgoing messages when the LAPD attempts to transmit a message again. Multiply N200 by T200 to determine the time that a retransmission requires. The increase in these values can increase the resources. You can use these resources to maintain a link that experiences transmission problems. The LAPD links that terminate on an SMA must share common resources in the EISP, like processor real time. This condition reduces the resources available to maintain other LAPD links on the same SMA. For SMAs that support MBS lines, the T200 value must be at least 25. This amount corresponds to the N201 value.
T203	30 s	30 s	Indicates the maximum time in seconds (s) allowed without an exchange of frames. The range is 10-250 s. If you shorten this background timer, the resources that maintain the backup links increase. These resources are a small percentage of the whole. A change to this parameter does not normally cause a problem.

If an IDT is offline, changes in field RDTDN of a RFT tuple can occur. These changes occur only if the changes are different for all RFT tuples. The following warning is for operating company personnel.

DANGER

Use extreme caution when you change field RDTDN.

This change causes loss of service on all lines on this IDT. Use the REPROV command in the RDTPROV increment after this change to restore service to the lines. Changes to the distinguished name at the RDT must accompany changes to field RDTDN. The changes to the format at the RDT must correspond to changes to field RDTDN. Failure to match these values prevents the establishment of a maintenance connection to an RDT.

Base SCM Access (continued)

Reprovision all lines on the RDT with the RDTPROV tool. Refer to the description of the RDTPROV level command syntax in the *Subscriber Carrier Module-100 Access Maintenance Manual*.

To avoid possible data entry problems:

- Always enter data in table RDTINV before you perform facility assignments in the OPC. Enter data in table RDTINV before you add, delete or re-assign DS-1 links.

  Note: To change DS-1 assignments, busy and return to service (RTS) the IDT.

- Assign consecutive logical link numbers in table RDTINV.
- Create a cross reference table. Tie the logical and physical link number assignments in this cross referenced table. These assignments are between the SMA, assigned in table RDTINV, and the network element assigned in the OPC facility manager.

The ILC Provisioning and RDTINV Table Control for IRTU, provide table changes. The changes are for the addition of the integrated remote test unit (IRTU) line card. The changes are also for virtual IRTU line card for the S/DMS AccessNode. Field MTSTACPT contains the fields that this feature affects. Completion of field MTSTACPT and installation of the IRTU card activates IRTU access.

Fields TST_PT_ACC_TYPE and PT_CONNECTION-INFO are deleted from table RDTINV. The following fields are added to table RDTINV:

- TSTUTTYP.
- TSTHDUSR (does not apply to ERTU).
- RTUNUM.
- VERTID.
- TSTACCPA.
- ALTUSE.

Base SCM Access (continued)

The entries for Base SCM Access for table RDTINV appear in the following table. Only the fields that apply directly to Base SCM Access appear.

Datafilling table RDTINV (Sheet 1 of 11)

Field	Subfield or refinement	Entry	Explanation and action
RTDNAME		refer to subfields	The RDT name is the key to this table. Use this name to identify the RDT to the system. This field contains subfields SITE, FRAME, and UNIT.
	SITE	alphanumeric	Site. Enter the four-character site name that belongs to the remote location. This entry must appear in table SITE.
	FRAME	0-511	Frame. Enter the logical frame number.
	UNIT	0-9	Unit. Enter the logical unit number. ***Note:*** The unit number must be 0 for the IDT configured with EOC. When you enter field EOC as S or O, enter O as the UNIT number in field UNIT.
ADNUM		0-4095	Administration number. The Engineering and Administrative Data Acquisition System for Data Collection (EADAS/DC) uses this number. The number identifies nodes within the DMS-100 Family switch, and remains fixed over dump and restore.
IDTNAME		refer to subfields	The IDT name. This field identifies the SMA and the IDT that connect to the RDT. This field contains subfields XPMTYPE, XPMNO, and IDTNO. ***Note:*** The IDT must be offline to change this field.
	XPMTYPE	SMA	The XMS-based peripheral module type. This field identifies the type of peripheral that connects to the RDT.
	XPMNO	0-127	The XPM number. This number identifies the SMA where the RDT connects.

Base SCM Access (continued)

Datafilling table RDTINV (Sheet 2 of 11)

Field	Subfield or refinement	Entry	Explanation and action
	IDTNO	0-255	The IDT number. This number identifies the IDT where the RDT connects. ***Note:*** Do not delete the IDT if there are lines attached to the IDT.
NENAME		$	Source identifier. The external operation support system uses the sources identifier to identify the RDT. The range is 1 to 20 characters. Enter this field with a $. The system enters the network element. The system takes the name provisioned at the RDT HMI. If the NE name retrieved from the AccessNode has spaces, `_' replaces the spaces.
PRIMOPC		1-20 characters	Primary OPC identifier. The range is 1-20 characters.
BACKOPC		1-20 characters	Backup OPC identifier. The range is 1-20 characters.
VARTYPE		see subfield	Variable type. Indicates the type of integrated digital loop carrier. The carrier is now in the S/DMS AccessNode. This field can override the default LAPD parameters. This override occurs if the access vehicle uses a CSC which the AccessNode uses. Field VARTYPE contains subfield RDTVAR.
	RDTVAR	RFT	The RDT variable. Enter RFT for an RDT equipped with NT proprietary extensions to the RDT signaling standards. ***Note:*** Do not change this field. Delete the tuple and add the tuple again.

Datafilling table RDTINV (Sheet 3 of 11)

Field	Subfield or refinement	Entry	Explanation and action
	SHELFSLT	refer to subfields	Shelf slot. This is a vector that controls the maximum number of lines an RFT can contain. For the RFT, subfields MINSHELF, MAX_RDT_SLOT, MINSLOT, and MAX_RDT_SLOT determine this number. ***Note:*** Currently the AccessNode has a hardware limit of 1344 lines. ***Note:*** A typical value for SHELFSLT is 1 7 1 96 where 1 is MINSHELF, 7 is MAX_RDT_SHELF, 1 is MINSLOT, and 96 is MAX_RDT_SLOT. The MAX_RDT_SHELF field can be changed to control the RFT line capacity. The other three fields are constants and any attempt to change these fields results in a warning message.
	MINSHELF	numeric (0 to 1)	Minimum shelf value. This subfield specifies the minimum allowable value for the shelf of a line equipment number (LEN). The only allowable value for AccessNode is 1.
	MAX_RDT_ SHELF	numeric (0 to 31)	Maximum shelf value. This subfield dentifies the maximum allowable value for the shelf of a LEN. The range is 0-31. For the RFT, this range is 1-31. The maximum value for AccessNode is 22.
	MINSLOT	numeric (0 to 1)	Minimum slot value. This subfield specifies the minimum allowable value for the slot of a LEN. The only allowable value for AccessNode is 1.
	MAX_RDT_ SLOT	numeric (0 to 99)	Maximum RDT slot value. This subfield specifies the maximum allowable value for the slot of a LEN. The only allowable value for AccessNode is 96. ***Note:*** For the last shelf, MAX_RDT_SLOT has a value of 32 because of the maximum line limit on RDTs/RFTs is 2048.

Base SCM Access (continued)

Datafilling table RDTINV (Sheet 4 of 11)

Field	Subfield or refinement	Entry	Explanation and action
CLAPDFLT		Y or N	Choose LAPD default. For the IDT, specify the use of default or optional LAPD parameters. Enter Y (use default parameters) or N (define optional parameters). If you enter N, subfield CLAPDPAR appears.
	CLAPDPAR	alphanumeric	Choose LAPD parameters. Specifies the LAPD parameters that are not default parameters. Enter the selected link access procedure. To complete the adjustments that follow, enter: • N201 and a number from 1-256. • N200 and a number from 1-10. • K and a number from 1-7. • T203 and a number from 10-300. • T200 and a number from 100-350.

Datafilling table RDTINV (Sheet 5 of 11)

Field	Subfield or refinement	Entry	Explanation and action
MTSTACPT		TBP, ERTU, IRTU or $	Metallic test access point. This selector field can identify types of metallic test access (MTA) points, configured on the RDT. The selector field includes: • TBP (test bypass pair). • ERTU (external remote test unit). • IRTU (integrated remote test unit). • $ (used for no entry, or stopping). Two different test heads can access the AccessNode at the same time. The following combinations can occur: • TBP individually: MAP terminal and test trunk (NTT) tests do not occur over the test bypass pair. • ERTU individually: Only NTT tests occur in the system. • IRTU individually: define one or both test heads; define only one test head for NTT use. • TBP with ERTU: TBP provides MAP terminal tests; ERTU provides NTT tests. • IRTU and ERTU: define one or both test heads, and define the IRTU as MAPIF. ***Note:*** The TBP or IRTU provide the MAP terminal testing. Use of the IRTU and the TDP can occur at the same time.
TBP		refer to subfields	Test bypass pair. This selector identifies the MTA point configured to supply metallic test bypass for MTM-based test heads, or NTT access. This access requires a horizontal cross-connect at the MTA, the trunk circuit for the metallic line test equipment. This field contains subfields TSTHDUSR, VERTID, and TSTACCPA.
	TSTHDUSR	MAPIF, NTTIF or BOTH	Test head user. Use this field to determine which test system (MAP, NTT or BOTH) uses the test head.

Base SCM Access (continued)

Datafilling table RDTINV (Sheet 6 of 11)

Field	Subfield or refinement	Entry	Explanation and action
	VERTID	0-1023	Vertical identifier. This field replaces the VERTID section of the original prompt (PT_CONNECTION_INFO). This field represents the vertical in the MTA matrix where the control path is tied.
	TSTACCPA	TBPP	Test access path. This field replaces the MTAUID and MTAPTID section of the original prompt PT_CONNECTION_INFO. The TBP only connects to TBPP.
	SCSDUSED	Y or N	Scan point/signal distributor point used. Enter Y if SD/SD points are in use and provide the multiple that contains: • INHSCGRP—range of 0-511. • INHSCPT—range of 0-6. • INHSDGRP—range of 0-511. • INHSDPT—range of 0-6. If SD/SD points are used enter N.
ERTU		refer to subfields	External remote test unit. This selector identifies an external metallic test head on the RDT, for NTT tests. This selector is compatible with the TBP selector. The MAP terminal tests use the TBP selector. This field contains subfields VERTID and TSTACCPA.
	VERTID	0-1023	Vertical identifier. This field replaces the VERTID section of the original prompt (PT_CONNECTION_INFO). This represents the vertical in the MTA matrix where the control path is tied.
	TSTACCPA	TAP1, TAP2, or TBPP	Test access path. This field replaces the MTAUID and MTAPTID section of the original prompt PT_CONNECTION_INFO. The ERTU can connect to TAP 1, TAP 2 or TBPP. ***Note:*** TAP 1 and TAP 2 are 4 wire interfaces. The TBPP is a 2 wire interface.

Datafilling table RDTINV (Sheet 7 of 11)

Field	Subfield or refinement	Entry	Explanation and action
IRTU		refer to subfields	Integrated remote test unit. This selector identifies an IRTU on the RDT for NTT tests. This field contains subfields RTUNUM, TSTHDUSR, VERTID, and TSTACCPA.
	RTUNUM	RTU1 or RTU2	The RTU number. Use this field to determine which test head on the IRTU must be defined.
	TSTHDUSR	MAPIF, NTTIF or BOTH	Test head user. Use this field to determine which test system (MAP, NTT or BOTH) uses the test head. Enter data in subfield ALTUSE or VERTID. The test head entered determines the subfield that requires data.
	ALTUSE	Y or N	Automatic line test use. Enter Y to use line test equipment for automatic line testing (ALT). Enter N if you do not require ALT. You require ALTUSE if TSTHDUSR is MAPIF or BOTH.
	VERTID	0-1023	Vertical identifier. This field replaces the VERTID section of the original prompt (PT_CONNECTION_INFO). This field represents the vertical in the MTA matrix tied to the control path. You require VERTID if TSTHDUSR is NTTIF or BOTH.
	TSTACCPA	TAP1, or TAP2	Test access path. This field replaces the MTAUID and MTAPTID section of the original prompt PT_CONNECTION_INFO. Connect IRTU test head 1 to TAP 1. Connect IRTU test head 2 to TAP 2.
	SCSDUSED	Y or N	Scan point/signal distributor point in use. Enter Y if SD/SD points are in use. The points must provide the multiple that contains: • INHSCGRP—range of 0-511. • INHSCPT—range of 0-6. • INHSDGRP—range of 0-511. • INHSDPT—range of 0-6. If SD/SD points are not in use, enter N.

Base SCM Access (continued)

Datafilling table RDTINV (Sheet 8 of 11)

Field	Subfield or refinement	Entry	Explanation and action
NTTOPT		Y or N	No test trunk signature option. This field indicates if the no test trunk (NTT) direct current (dc) voltage signature enables for a particular RDT. If the value is Y, the field provides the dc signature for POTS, coin, and multi-party lines. If the value is not Y, the field does not provide a signature for any of the line types. ***Note:*** When you enter the NTTOPT field as N or change the field to N, the following message outputs at the MAP terminal: `NTT signature will not be provided during line maintenance.`
LINKTAB		numeric	Link table. This is a vector, with a maximum of 20 entries. The entries define the mapping of the C-side links of the RDT (logical link) to the P-side links (physical link) of the SMA. ***Note:*** When you enter field C-side link table (LNKTAB), do not assign message links to the same physical interface card. The interface card supports two or more links. Separate the message links by the number of links on the interface cards. If you attempt to assign message links on the same interface card, table control issues a warning. If the card fails, a warning occurs. The assignment of message links to the same interface card can cause an E1 outage (failure of all message links). The outage occurs if the card fails. ***Note:*** Make changes to fields with multiple entries in the PROMPT mode only.
		+ or $	Continuation mark. Enter + to continue, and $ to end the vector.

Datafilling table RDTINV (Sheet 9 of 11)

Field	Subfield or refinement	Entry	Explanation and action
PROT		Y or N	Facility protection switching. Specifies if protection switching has support. If yes, the protection link is the highest numbered link on the RDT in the LINKTAB field. ***Note:*** Entry Y does not have support for the RFT.
POTSPADG		STDLN	The POTS pad group. The acceptable values are UNBAL and STDLN. Enter STDLN as a value.
EOC		refer to subfields	Embedded operations channel. Indicates if EOC is present, and if standard or LAPD parameters are in use. This field contains subfields EOCTYPE and ELAPDPAR. ***Note:*** To change the IDT and the channel, place the IDT and the channel offline.
	EOCTYPE	S, O or N	The EOC type. Indicates if EOC is present. Indicates if standard or optional LAPD parameters are in use. Enter: • S for standard LAPD parameters. • O for optional LAPD parameters. The subfield ELAPDPAR appears. • N in an EOC is not present. For the AccessNode, enter S or O. ***Note:*** Change the LAPD parameters of the EOC/CSC when the IDT and the channel are man-busy or offline. Enter an RDT with S or O, and the value of the UNIT in field RDTNAME is 0.

Base SCM Access (continued)

Datafilling table RDTINV (Sheet 10 of 11)

Field	Subfield or refinement	Entry	Explanation and action
	ELAPDPAR	alphanumeric	Enhanced LAPD parameters. The ELAPDPAR appear when you enter O in the EOCTYPE subfield. Specify the optional LAPD parameters. Enter five values, with a space between each value. These values are as follows: • N201 and a number from 1-256. • N200 and a number from 1-8. • K and a number from 1-128. • T203 and a number from 10-250. • T200 and a number from 100-250.
SDPOINTS		alphanumeric	Signal distribution point. Enter the SD point that corresponds to this RDT. If `which RDT SD points require operation when the RDT enters an alarm, the range of values is:` • RDTSD1. • RDTSD2. • RDTSD3. • RDTSD4. • RDTSD5. • RDTSD6. • RDTSD7. • RDTSD8. A maximum of 255 different combinations of activated SD points to indicate the RDT raises an alarm are present. Use this field to group RDTs together. Assign the same `which RDT` points to multiple RDTs. ***Note:*** First, enter each of the SD points in table ALMSD. The IDT must be offline to change any SD point. If field SDPOINTS is set to $ (nil), this indicates that entry of SD points for RDT alarms is not present. If SDPOINTS is set to $ (nil), alarm severity (RDTCRIT, RDTMAJOR, RDTMINOR) are not activated.

Datafilling table RDTINV (Sheet 11 of 11)

Field	Subfield or refinement	Entry	Explanation and action
RDTDN		refer to subfields	The RDT distinguished name. This is a vector of one to five elements for the RDT_RDN. Each element represents a relative distinguished name (RDN). Each element makes up the distinguished name of the RDT. Enter data in this field only when you add an RDT tuple. If you attempt to modify this field, an error message appears.
	RDN_TYPE		Relative distinguished name. Enter the RDN of the RDT. The range of values is as follows: • NETWORK_ID. • SYSTEM_ID. • NETWORKELEMENT_ID. • EQUIPMENT_ID. ***Note 1:*** You cannot edit this field for BCS35. Delete the tuple and add the tuple again. Make sure the values for this field match the values assigned to the S/DMS AccessNode. If these values do not correspond to the S/DMS AccessNode, lines are not provisioned. ***Note 2:*** For an RDT of type RFT, the network_id, system_id, and equipment_id values must be set to 1. This value corresponds to the values on the S/DMS AccessNode. If the values in this table are not set to 1, the following warning message appears: `WARNING: The network_id, system_id and equipment_id are set to 1.`.
	RDN_VAL	0-32767	Relative distinguished name value. Enter the value for the RDN.

Datafill example for table RDTINV

Sample datafill for table RDTINV appears in the following example.

Base SCM Access (continued)

MAP display example for table RDTINV

```
RDTNAME    ADNUM      IDTNAME                  NENAME
           PRIMOPC                             BACKOPC
                                  VARTYPE    CLAPDFLT
                                                MTSTACPT
                                                 LINKTAB
     NTTOPT
PROT   POTSPADG           EOC
                                                SDPOINTS
                                                 RDTDN
------------------------------------------------------------
CARY 03 0    10     SMA 1 3   $               AccessNode
          BRTPY205                                 $
                                 RFT 1 7 1 96  Y        $
         (TBP MAPIF 8 TBPP N)  (ERTU NTTIF 9 TAP1 N)   $
     Y
                                    (1 0) ( 2 3) (4 5)   $
   N     STDLN                   S                      $
(NETWORK_ID 1) (SYSTEM_ID 1) (NETWORKELEMENT_ID 14)
(EQUIPMENT_ID 1) $
```

The following section contains error and warning messages for table RDTINV.

Error and warning messages for table RDTINV (Sheet 1 of 2)

Error/warning message	Explanation and action
`Warning: Additional static data not updated for <SMA> <SMA_no> <unit_no>.`	Indicates failure of the dynamic update of static data.
`Warning: Additional static data updates completed for SMA.`	The dynamic update of static data is complete.
`Warning: SMA <sma_no> is in overload. Static data update may fail.`	An attempt to move an IDT from one SMA to another SMA occurred. The SMA that the IDT must move to is in an overload condition. Static data can require a manual update after the IDT is moved.
`Error: Do not change XPM message link <link_no>to a speech link.`	An attempt to change a current message link with a speech link occurred.
`Error: RDT <IDT_index> must be offline to change field RDTDN.`	An IDT is not offline. The system blocks an attempt to change field RDTDN of a RFT tuple.

Error and warning messages for table RDTINV (Sheet 2 of 2)

Error/warning message	Explanation and action
`Error: The specified RDTDN is already assigned to another RDT.`	The IDT is offline. The system blocks an attempt to change field RDTDN of a RFT tuple. The system blocks the field changes to a value not different with the RFT tuples.
`Error: Invalid RDT DN - RDNs missing or out of order.`	An attempt to add or change the tuple occurred. This tuple has more than one entry of network-id for an RFT tuple. The system blocks the request.
`Error: More than two verticals are datafilled.`	An attempt to enter more than two verticals occurred.
`Error: Duplicate VERTID for MTSTACPT configuration.`	An attempt to enter duplicate verticals occurred.
`Error: The verticals used are not sequential.`	An attempt to enter non-sequential verticals occurred.
`Error: Duplicate TAP for MTSTACPT configuration.`	An attempt to enter duplicate TAPs occurred.
`Error: MTSTACPT has duplicate entry of type TBP.`	An attempt to enter duplicate test units occurred.
`ERTU can only be used by NTT.`	An attempt to enter an ERTU that an incorrect test system uses occurred.
`Warning: Wrong TEST ACCESS PATH for TBP. Change to TBPP.`	You entered an incorrect TAP. The system accepts the data.
`Another table has use of the key (RDT name). Use different SITE, FRAME, and/or UNIT values.`	An attempt to add a tuple in table RDTINV occurred. Another table has use of the selected key.

An earlier limit did not allow you to delete a link from field LINKTAB if ISDN lines are present on that RDT. A change in this limit allows you to delete a link

Base SCM Access (continued)

from field LINKTAB. If ISDN lines use that link, you cannot delete the link. The following error messages can appear.

Error messages for table RDTINV

Error message	Explanation and action
`Error: There are active ISDN line tuples on this RDT. This RDT cannot move to another SMA.`	An attempt to change the C-side PM for the IDT occurred. The attempt is invalid because ISDN lines are present on the RDT. Delete all ISDN lines on the RDT or set all ISDN lines on the RDT to HASU. Delete all special connections on the RDT before this change is made.
`Error: Delete static connections that exist on the links.`	An attempt to change or delete a current link in field LINKTAB occurred. The attempt is invalid because an ISDN line uses a channel on that link. Change or delete the ISDN line or special connection that uses the channel before you delete the link.
`Error: There are active ISDN line tuples on this RDT. Do not change the line configuration for this RDT.`	An attempt to change or delete a current link in field LINKTAB occurred. The attempt is invalid because ISDN lines are present on the RDT. Delete all ISDN lines on the RDT or set all ISDN lines to HASU. Delete all special connections on the RDT before you make this change.

The following information consists of warning messages that can appear when you enter IRTU information.

Warning messages for IRTU datafill

Warning	Reason
`ALT uses only one RTU`	Refer to note.
`ALTUSE field for RTU2 changed to N`	The RTU1 is entered with ALTUSE set to Y. An attempt to add RTU2 with ALTUSE set to Y occurred.
`ALTUSE field for RTU1 changed to N`	The RTU2 is already entered with ALTUSE set to Y. An attempt to add RTU1 with ALTUSE set to Y occurred.
Note: The system combines this warning message with the other two IRTU warning messages. This warning is a response to the attempt to enter data.	

Datafilling table TMINV

The trunk module inventory (TMINV) table contains hardware and software information for each trunk module in an office. This table is important for the SMA-RDT system. This table identifies the trunk modules or MTMs that contain test circuits that terminate test pairs that connect to RDT lines.

The entry for Base SCM Access for table TMINV appears in the following table. Only the fields that apply directly to Base SCM Access appear.

Entry table TMINV (Sheet 1 of 2)

Field	Subfield or refinement	Entry	Explanation and action
TMNM		refer to subfields	Trunk module number. This field contains subfields TMTYPE and TMNO.
	TMTYPE	TM8, MTM, or OAU	Trunk module type. Enter the trunk module type.
	TMNO	numeric	Trunk module number. Enter the trunk module number. Range for TM8 is 0-2047. The range for maintenance trunk module (MTM) is 0-255. For an office alarm unit (OAU), enter 0.
FRTYPE		TME	Frame type. Enter the frame type where the trunk module is located. Enter TME.
FRNO		numeric	Frame number. Enter the frame number of the TME frame.
SHPOS		numeric	Shelf position. Enter the base mounting position of the trunk module. For TM8, range is 04, 18, 32, 51, or 65. For an MTM, enter 65. For an OAU, enter 51.
FLOOR		0-99	Floor. Enter the floor number where the trunk module is located.
ROW		alphabetic	Row. Enter the row number where the trunk module is located. The range is A-H, J-N, P-Z, AA-HH, JJ-NN, and PP-ZZ.
FRPOS		numeric	Frame position. Enter the bay position of the TME frame.

Base SCM Access (continued)

Entry table TMINV (Sheet 2 of 2)

Field	Subfield or refinement	Entry	Explanation and action
LKDATA		refer to subfields	The C-side link data. For switches equipped with the JNET, this field contains subfields NMPAIR and NMPORT. For switches equipped with the ENET, this field contains subfields ENPAIR, ENSLOT, and ENLINK.
	NMPAIR	0-31	Network module pair number. Enter the network module number assigned to the trunk module.
	NMPORT	0-63	Network port number. Enter the network module port number assigned to the trunk module.
	ENPAIR	0-3	The ENET pair number. Enter the network pair number where the PM is assigned.
	ENSLOT	9-32	The ENET slot number. Enter the crosspoint slot number where the PM is assigned.
	ENLINK	0-15	The ENET link number. Enter the link on the crosspoint where the PM is assigned.
EQPEC		alphanumeric	Equipment product engineering code. Enter the PEC of the trunk module.
LOAD		alphanumeric	Load. Enter the issue name of the PM software.
EXECS		alphanumeric	Executive programs. Enter the set of executive programs that the trunk module requires.

Datafill example for table TMINV

Sample datafill for table TMINV appears in the following example.

MAP display example for table TMINV

```
TMNM FRTYPE FRNO SHPOS FLOOR ROW FRPOS LKDATA EQPEC    LOAD
 EXECS      SCTMLOC
-----------------------------------------------------
TM8 0   TME    1   65     0   L   16   0 53 2X52AG  BTMKA02
 TM8EX           N
```

Datafilling in table TRKGRP

Table trunk group (TRKGRP) contains customer defined data associated with each trunk group that is present in the switching unit. Each trunk group entry

in table TRKGRP consists of a different CLLI for the trunk group and a number of other fields. The trunk group type (field GRPTYP) determines these other fields. The trunk group types that apply to the SMA-RDT system are as follows:

- MAINT for maintenance trunks like MTU,
- TD for no test trunks like BASIC or MLT trunks.

Table TRKGRP identifies test circuits associated with maintenance and test trunks.

SCM line monitor access

Operating company personnel at a remote test center initiate tests on a subscriber line. The line can be in a call processing busy state. Subfield BARGE in table TRKGRP determines if access to the line is possible in the bridged mode through a conference card. Operating company personnel verify if the line is busy. Operating company personnel do not use a no test trunk only to initiate a defective busy signal. When the subfield is set to Y, operating company personnel can access the line through a conference card. When the subfield is set to N, which is the default value, operating company personnel cannot access the line through a conference card.

This document does not provide a data entry procedure for this table, because of the multiple configurations of table TRKGRP>

Datafill example for table TRKGRP

Sample datafill for table TRKGRP appears in the following example.

MAP display example for table TRKGRP

```
GRPKEY                                  GRPINFO
-------------------------------------------------------
HSET
          MAINT   0  NPDGP  NCRT  5X30AA
TERM101
          MAINT   0  NPDGP  NCRT  5X30AA
JACK
          MAINT   0  NPDGP  NCRT  1X54AA
LTU
          MAINT   0  NPDGP  NCRT  2X11AA
MTU
          MAINT   0  NPDGP  NCRT  2X90AD
```

Base SCM Access (continued)

Datafilling table TRKSGRP

Table trunk subgroup (TRKSGRP) lists additional information for each subgroup assigned for one of the trunk groups that table TRKGRP lists.

The system must specify input data for at least one subgroup. The maximum is two subgroups for each trunk group that table TRKGRP lists. These groups exclude trunk groups defined as maintenance group types.

Note: Table TRKGRP entry produces the trunk subgroup data for maintenance and test trunks. This entry excludes subgroup one of trunk group with code TTU.

This document does not provide a data entry procedure, because of the multiple configurations of table TRKSGRP.

Datafill example for table TRKSGRP

Sample datafill for table TRKSGRP appears in the following example.

MAP display example for table TRKSGRP

```
      SGRPKEY   CARDCODE
                                                    SGRPVAR
-------------------------------------------------------------
MTU 0   2X11BA
  STD OG    NP     WK   0 0 NO   NO F N N  17
UNEQMONTALK 0   2X90AD
  STD OG    NP     WK   0 0 NO   NO F N N  17   UNEQTTU 0
 2X47AC
  STD OG    NP     WK   0 0 NO   NO F N N  17   UNEQ
```

Datafilling table TRKMEM

Table trunk member (TRKMEM) lists data associated with each trunk assigned to one of the trunk groups and trunk subgroups specified in tables TRKGRP and TRKSGRP. Table TRKMEM identifies the circuits associated with test equipment and trunks entered in tables TRKGRP and TRKSGRP.

A data entry procedure is not provided for this table.

Datafill example for table TRKMEM

Sample datafill for table TRKMEM appears in the following example.

MAP display example for table TRKMEM

```
CLLI    EXTRKNM    SGRP                MEMVAR
-------------------------------------------------
MTU         0      0                 MTM   0 22
MTU         1      0                 MTM   2  2
HSET        0      0                 TM8   0  4
```

Datafilling table SFWALARM

Table software alarm (SFWALARM) associates a software alarm with SD points. These SD points must activate when the software alarm activates. Operating company personnel add or delete entries in this table. Operating company personnel can change the data.

The datafill for Base SCM Access for table SFWALARM appears in the following table. Only those fields that apply directly to Base SCM Access appear.

Datafilling table SFWALARM (Sheet 1 of 2)

Field	Subfield or refinement	Entry	Explanation and action
FUNCTION		alphanumeric	Function. Enter the system alarm function. This function can be a maximum of 16 characters. The system adds RDTWRN automatically.
REPORT		Y or N	Report. Enter Y if an alarm report is logged. If an alarm report is not logged enter N. For RDTWRN, set this value to N.
ALM		CR, MJ, MN, or NA	Alarm. Enter the type of alarm activated or NA for not applicable. For RDTWRN, set this value to NA.
LOGIC		see subfields	Logic. This field consists of subfields SDFUNCT, ALMGRP and ALMXFR.
	SDFUNCT	alphanumeric	Signal distributor function. Enter the signal distributor function(s) associated with a specified system alarm. For RDTWRN, set this value to RDTWARN.

Base SCM Access (continued)

Datafilling table SFWALARM (Sheet 2 of 2)

Field	Subfield or refinement	Entry	Explanation and action
	ALMGRP	Y or N	Alarm grouping. Enter Y if the system implements the alarm function and when the alarm grouping key is activated. Enter N if the system does not implement the alarm function when the alarm grouping key is activated. For RDTWRN, set this value to N.
	ALMXFR	Y or N	Alarm transfer. Enter Y if the system implements the alarm function when the alarm transfer key is activated. Otherwise enter N. For RDTWRN, set this value to N.
	CONTMARK	+ or $	Continuation mark. Enter a (+) sign to indicate the line continues, or a ($) to indicate the end of the line.

Datafill example for table SFWALARM

Sample datafill for table SFWALARM appears in the following example.

MAP display example for table SFWALARM

```
FUNCTION
 REPORT  ALM                                      LOGIC
---------------------------------------------------------
 RDTCRT
     N   CR  (RDTCRIT N N)    $
 RDTMJ
     N   MJ  (RDTMAJOR N N)   $
 RDTMN
     N   MN  (RDTMINOR N N)   $
RDTWRN
     N   NA  (RDTWARN N N)    $
```

Datafilling table LINEATTR

Line attributes entered in table line attribute (LINEATTR) are assigned to normal lines in table LENLINES. Line attributes are assigned to Meridian stations and attendant consoles in MDC translation tables.

The datafill for Base SCM Access for table LINEATTR appears in the following table. Only the fields that apply directly to Base SCM Access appear.

Datafilling table LINEATTR (Sheet 1 of 4)

Field	Subfield or refinement	Entry	Explanation and action
LNATTIDX		0-1023	Line attribute index. Enter the index into the table.
LCC		alphanumeric	Line class code. Enter the line class code assigned to the line attribute index number. If a line class code is not present, enter NLCC.
CHGCLSS		alphanumeric	Charge class. Enter the charge class for switching units configured with Local Automatic Message Accounting (LAMA). If this entry does not apply, enter NONE.
COST		HI, LO, or NT	Class of service tone. Enter the class of service tone you require.
SCRNCL		alphanumeric or NSCR	Class of service screening subtable name. Enter the four-character class of service assigned in the line attribute index. Enter NSCR if you do not require screening by class .
LTG		0-255	Line treatment group. Enter the line treatment group number assigned to the line attribute index.
STS		numeric	Serving translation scheme. Enter the three-digit serving numbering plan area (NPA) assigned to the line attribute index.
PRTNM		alphanumeric or NPRT	Standard pretranslator subtable name. Enter the four-character pretranslator subtable name assigned to the line attribute index. Enter NPRT if you do not require standard pretranslation.
LCANAME		alphanumeric or NLCA	Local calling area screening subtable name. Enter the five-character local calling area screening subtable name assigned to the line attribute index. Enter NLCA if you do not require screening.

Base SCM Access (continued)

Datafilling table LINEATTR (Sheet 2 of 4)

Field	Subfield or refinement	Entry	Explanation and action
ZEROMPOS		alphanumeric or NONE	Zero minus position. Enter the ten-character position given in table POSITION where operator zero minus calls are routed. Enter NONE if operator zero minus calls are not present.
TRAFSNO		0-127	Traffic separation number. Enter the network module number assigned to the trunk module.
CONTMARK		+	Continuation mark. Enter a plus sign to indicate that the next record contains additional information for the tuple.
MRSA		alphanumeric or NIL	Message rate service area. Enter the eight-character message rate service area name that table MRSA contains. Enter NIL if you do not require multi-unit message rate services.
SFC		alphanumeric or NILSFC	International subscriber feature class. Enter a six-character international subscriber feature class name found in table FEATCHG. Enter NILSFC if you do not require international classes.
LATANM		alphanumeric	Local access and transport area name. Enter the eight-character local access and transport area name assigned to the line attribute index.
MDI		0	Metering data index. Enter the metering data index number assigned to the line attribute index. Enter 0 if you do not require international metering data.
XNAME		refer to subfields	International translation system start. Consists of subfields XLASYS and XLANAME.
	XLASYS	AC, AM, CT, DT, FA, FT, OFG, NSL, PX, or NIL	International translation system. Enter the head table name where translation starts. Or enter NIL if the switching unit does not have an international load.
	XLANAME	alphanumeric or NIL	International translation name. Enter the eight-character index that field XLASYS refers to. Enter a blank if subfield XLASYS is entered as NIL.

Datafilling table LINEATTR (Sheet 3 of 4)

Field	Subfield or refinement	Entry	Explanation and action
DGCL- NAME		alphanumeric or NIL	Digital analysis tables entry point. Enter an eight-character digital analysis name that appears in tables DGHEAD and DGCODE. Enter NIL if the switching unit does not have an international load.
FANIDIGS		00-99	Flexible ANI information digit pairs. Enter the flexible automatic number identification information digit pair assigned to the line attribute index. Enter 00 if the switching unit is not equipped with feature BR0713.
CONTMARK		+	Continuation mark. Enter a plus sign to indicate that the next record contains additional information for the tuple.
RESINF		refer to subfields	Residential enhanced services information. Consists of subfields RESINFO, CUSTGRP, SUBGRP, and NCOS.
	RESINFO	Y or N	Residential enhanced services information. Enter Y if the line attribute index must support residential (RES) lines. Enter N if the line attribute index does not have to support RES lines.
	CUSTGRP	alphanumeric	Customer group. Enter a 16-character group name assigned to the line attribute index that appears in table CUSTENG.
	SUBGRP	0-7	Customer subgroup. Enter the subgroup in the customer group associated with the line attribute index.
	NCOS	0-255	Network class of service number. Enter the network class of service number in the customer group, associated with the line attribute index. The network class of service number also appears in table NCOS.

Base SCM Access (continued)

Datafilling table LINEATTR (Sheet 4 of 4)

Field	Subfield or refinement	Entry	Explanation and action
OPTIONS		AMAGRPID, HOT, or LCABILL	Enter AMAGRPID if a subscription basis tariff requires a group identity. Enter HOT if a traffic operator position system requires identification of hotel lines. Enter HOT if the outgoing trunk group is OP. Enter LCABILL if a noninterexchange carrier call can be billed.
	AMAGRPID	alphanumeric	Automatic message accounting group identifier. Enter the eight character group identifier that appears in table AMAGRPID.
CONTMARK		$	Continuation mark. Enter $ to indicate the end of the tuple.

Datafill example for table LINEATTR

Sample datafill for table LINEATTR appears in the following example.

MAP display example for table LINEATTR

```
LNATTIDX LCC CHGCLSS COST SCRNCL LTG STS PRTNM LCANAME
ZEROMPOS TRAFSNO
MRSA SFC LATANM MDI IXNAME OGCLNAME FANIDIGS RESINF
OPTIONS
-----------------------------------------------------
0  1FR  NONE  NT  NSCR  0  919  POTS  LCA0  CTOP  20
NIL NILSFC NILLATA  0  NIL  NIL  00              N $
```

Datafilling table LNINV

Enter subscriber lines that connect to RDT in table line inventory (LNINV). This table defines the line equipment number (LEN) and hardware characteristics of a line.

An adjustment of the subfields that identify the line card allows a LEN to identify a RDT line card. In a LEN for a line concentrating module (LCM), the fields for the LEN are as follows:

- SITE.
- FRAME.
- UNIT.

- SUBGROUP.
- CIRCUIT.

The fields of the LEN that define the RDT are as follows:

- SITE.
- FRAME.
- UNIT.
- SHELF (This field defines the shelf number. The shelf number range is 1-22.)
- SLOT (This field defines the slot number. The possible range is 1-99. For the RFT, the range is 1-96. The maximum number of lines for each shelf is 96. Since the maximum number of lines is 2048, the last shelf is limited to 32. However, the RFT currently has a hardware limitation of 1344 lines.)

The SITE, FRAME, and UNIT numbers form a line module (LM) number. The SHELF and SLOT numbers are mapped to a terminal number.

Maximizing number of lines controlled

The SHELF range of a maximum of 31, and the SLOT range of a maximum of 99. A theoretical maximum of 2976 lines is present.

The section “Datafilling table RDTINV" explains the use of field SHELFSLT to limit the number of lines RDT can have. Field SHELFSLT requires operating company personnel to enter the maximum values for both the shelf and slot numbers. Table RDTINV provides table control. The maximum number of lines for the RFT is 1344.

An expansion of field CARDCODE allows additional types of line cards for the RDT. The card codes for the RDT are as follows:

- RDTCON - COIN .
- RDTLSG - POTS (loop start/ground start).
- RDTEBS - MBS.
- RDTISD - ISDN.
- RDTMPY - multi-party.
- RDTILC - integrated line card.

Note: A single RDT supports up to 324 ISDN lines.

Base SCM Access (continued)

Note the following actions between tables:

- The line assignments for coin lines are made in table LENLINES. The LNATTIDX field corresponds to the line class code. The code is coin first (CCF), coin dial-tone first (CDF), or coin semi-post pay (CSP) in table LINEATTR.
- The POTS lines (RDTLSG) do not have tuples that correspond to the POTS lines in KSET-type tables.
- For MBS, field VARTYPE in table RDTINV must be RFT.

Enter table RDTINV, and enter table LNINV. The DMS switch must identify the RDT before the switch identifies lines on the RDT.

Note: The Omega SAA line card allows SERVORD to flow through provision of locally switched AccessNode RFT lines. The SERVORD permits the operating company to bulk datafill information for line cards in table LNINV. The system updates the default data with the correct data for the type of service requested when services are provisioned. The system only updates fields CARDCODE, PADGROUP and GND. This feature does not support multi-party, Datapath, DID and IVD services.

Reboot of the DMS SuperNode switch

CAUTION
Risk of traffic degradation
If data is entered in table LNINV, a reboot of the DMS SuperNode switch can occur before the office image is dumped to tape or disk. As part of routine maintenance, the office image the reboot uses does not contain the entry for table LNINV.

When this event occurs, restore the RDT ISDN line entry in table LNINV immediately after the reboot is complete. You can restore the RDT ISDN line entry in one of two ways.

1. Input the entry information for table LNINV again. Input this information at a terminal.

2. Apply the contents of the appropriate journal file to the DMS-100 office load.

Failure to restore the contents of table LNINV causes incorrect release of D-channels in the S/DMS AccessNode. This occurrence causes traffic degradation. Traffic degradation causes the DMS SuperNode switch to generate LINE138 logs.

The LNINV Provisioning that uses SERVORD for RDT Lines improves the service order process. The service order process allows the automatic addition or deletion of line datafill in table LNINV for RDT lines.

The system adds new service to a line. The system creates line datafill based on user input, office parameter values, and default values. The LNINV datafill is not present before a SERVORD request. The SERVORD user input determines values for fields LEN, CARDCODE, PADGRP, and GND.

A hard coded default value provides the value for field BNV. The office parameter RDT_SO_AUTOCREATE_LNINV in table OFCENG provides the value for field MNO.

Line datafill in table LNINV can be present before a SERVORD transaction. The SERVORD alters the line datafill to agree with the service request.

The ILC provisioning and RDTINV table control make the following changes in table LNINV.

Base SCM Access (continued)

The integrated line card (ILC) represents a *virtual* line card that emulates control, talk, and monitor path functionality. The control path transmits and receives data to the IRTU test head.

The talk or monitor path allows talk or monitor functions to the line under test. Each ILC must be different. This difference permits control of which ILC represents which test head, and the function the ILC performs.

The RDTILC is an additional value for field CARDCODE. This value represents the ILC that the system uses to interface the IRTU. Additional card types in field CARDINFO, to allow the IRTU access to the AccessNode. The following is a list of new card types for field CARDINFO:

- ILC1C-ILC control path for test head 1.
- ILC1T-ILC talk path for test head 1.
- ILC2C-ILC control path for test head 2.
- ILC2T-ILC talk path for test head 2.

A limit of the number of test heads for each RDT and IDT is present. A maximum of four ILC can be entered on the same RDT in table LNINV. There is no requirement to have the IRTU installed at the AccessNode to provision the IRTU from the DMS SuperNode switch.

The line provisioning audit checks the call reference value and head path information of the provisioned ILC every 24 hours.

The ILCs provide origination and termination points for maintenance functions. The ILC represents a maintenance function and does not represent service capability. This limit causes the SERVORD to allow only a directory number and one flat rate (1FR) service for all IRTU line card creations. After the line object is created, and service is provisioned through SERVORD, the state of the ILC is set to idle.

Note: A line card associated with the IRTU line at the AccessNode is not present because the ILC is a virtual concept. Reserve an empty copper distribution shelf slot for each ILC. The OPC and RFT handle and perform all control and maintenance actions.

Base SCM Access (continued)

The following restrictions apply to ILC provisioning and RDTINV table control.

- The system does not support flow through provisioning for RDTILC.
- The system supports ILC provisioning in the multi-host configuration. Only the provisioning host has access to the ILC.
- AccessNodes that run at AN08 or later support ILC provisioning. The system blocks attempts to enter an IRTU line card in table LNINV if the AccessNode runs at AN07 or earlier.

CAUTION
Reserve an empty copper distribution shelf slot for each ILC.
For proper operation of ILCs, the slot where the ILC is provisioned must remain empty.

The datafill for Base SCM Access for table LNINV appears in the following example. Only the fields that apply directly to Base SCM Access appear.

Datafilling table LNINV (Sheet 1 of 3)

Field	Subfield or refinement	Entry	Explanation and action
LEN		refer to subfields	Line equipment number. This field contains the following subfields: SITE, RDTFRAME, RDTUNIT, RDTSHELF, and RDTSLOT.
	SITE	alphanumeric	Site. Enter the location of the RDT. This entry is not optional, and a default value is not assigned.
	RDT FRAME	0-511	The RDT frame. Enter the RDT frame number. This frame number is not a physical frame but a software entity. The entity represents the group where the RDT belongs.
	RDT UNIT	0-9	The RDT unit. Enter the number representing the RDT unit within the group.
	RDT SHELF	1-31	The RDT shelf. Enter the shelf number where the RDT resides.
	RDT SLOT	1-99	The RDT slot. Enter the slot number where the RDT resides.

Base SCM Access (continued)

Datafilling table LNINV (Sheet 2 of 3)

Field	Subfield or refinement	Entry	Explanation and action
CARDCODE		RDTCON, RDTLSG, RDTEBS, RDTISD, RDTMPY, and RDTILC	Card code. Enter the PEC of the line card or line card carrier. The following identifies the correct object class types for the cardcode values: • RDTCON-Coin. • RDTLSG-Loop Start/Ground Start. • RDTEBS-Meridian Business Set (MBS). • RDTISD-ISDN. • RDTMPY-multi-party TR303 RDT line. • RDTILC-IRTU line card.
PADGRP		STDLN, UNBAL, PPHON, RCT, LRLM and NPDGP	Pad group. Enter the name of the pad group assigned to the line circuit in table PADDATA. Apply pads on the lines at the SMA. For cardcode RDTILC, use STDLN as the response for field PADGRP.
STATUS		HASU, WORKING, UNEQUIP, CUTOFF, and RESERVED	Status. Enter the line inventory availability status. For cardcode RDTILC, use HASU as the response for field STATUS.
GND		Y or N	Ground. Where the line is ground start, enter Y. Where the line is not ground start enter N for loop start. For cardcode RDTILC, N is the recommended response for field GND.
BNV		L or NL	Balanced network value. Enter L when line circuit is configured for a loaded network. Enter NL for not loaded network. For cardcode RDTILC, NL is the recommended response for field BNV.

Datafilling table LNINV (Sheet 3 of 3)

Field	Subfield or refinement	Entry	Explanation and action
MNO		Y or N	Manual override. Enter Y when on-hook balance network test cannot update the field BNV. Enter N to allow off-hook balance network test to update field BNV. For cardcode RDTILC, N recommends the response for field MNO.
CARDINFO		RCUPOTS, RCUEPOTS, SSLCC, ILC1C, ILC1T, ILC2C, ILC2T, or NIL	Card information. The default value is NIL. For SMA enter NIL. When CARDCODE is RDTILC, datafill ILC1C, ILC1T, ILC2C, or ILC2T.

Datafill example for table LNINV

Sample datafill for table LNINV appears in the following example.

MAP display example for table LNINV

```
LEN             CARDCODE PADGRP STATUS GND BNV    MNO
CARDINFO
------------------------------------------------------------
CARY 01 0 04 10 RDTILC  STDLN   HASU  N NL   N     ILC1C
```

Other provisioning functions Operating company personnel can issue the RDTPROV command at the CI level of the MAP display to reprovision of all failed lines. These failed lines are on an RDT, or are on all RDTs from the SMA. Operating company personnel can initiate this process without the use of the table level of the MAP display.

After operating company personnel enter the RDTPROV command, operating company personnel use the command string REPROV LEN <len>. For this string, len is the line equipment number. The use of this command string initiates the reprovisioning request for a failed line on an RDT. For example,>**REPROV LEN CARY 01 0 07 96**

If the request is successful, the system responds and identifies the LEN. The system indicates the request is complete, as follows:

```
LEN: CARY 01 0 07 96 RDT line provisioning request completed
```

Base SCM Access (continued)

Additional RDTPROV parameters include:

- REPROV IDT <ext_idtno> {Normal, Force}, where ext_idtno is the external IDT number that has a value from 0 to 255. Use this command string to reprovision all failed lines on a specified RDT.
- Use REPROV ALL to reprovision all failed lines on all RDTs.
- Use RDTPROV; REPROV RANGE start_len end_len {Normal, Force} to reprovision a range of LENs.

  Note: Use the NORMAL or FORCE option to reprovision lines. The use of NORMAL or FORCE depends on line provisioning at the DMS SuperNode switch. Enter the FORCE option to reprovision all lines in the designated range. Enter the NORMAL option to reprovision only lines that fail.

Refer to the description of the RDTPROV level command syntax in the *Subscriber Carrier Module-100 Access Maintenance Manual*.

Datafilling table RDTLT

Table remote digital terminal line termination (RDTLT) contains information about the next operation the line object provisioning process must perform. This process occurs on a line that connects to the RDT. The LEN of the line card identifies this line. This table correlates the LEN of the line card to the status of the message flow between the DMS switch and the RDT. The message flow is about objects that relate to lines.

When a new line is entered for RDT in table LNINV, the system adds a tuple to table RDTLT. When a line that connects to the RDT is deleted, the system deletes a tuple from table RDTLT. Updates to the tuple are made from LNINV table control, or from line provisioning process software. These updates do not occur during dump and restore processes. Table RDTLT is a *read-only* table.

The following table shows the fields that the system automatically enters for table RDTLT. The the following table is for information only.

Datafilling table RDTLT (Sheet 1 of 9)

Field	Subfield or refinement	Entry	Explanation and action
LEN		refer to subfields	Line equipment number. This field defines the physical location of the equipment that connects to a specified telephone line. For ISDN lines, field LEN consists of subfield LTID. For non-ISDN lines, field LEN consists of subfields SITE, FRAME, UNIT, DRAWER or LSG, SHELF, SLOT, and CIRCUIT.
ACCESS		refer to below	Line provisioning process operation. This field identifies the operation that the line provisioning process performs for an RDT line.
		ACCESS_NIL	There is no action required.
		I_ACCESS_ DONE	Line objects provisioning for ISDN line done.
		I_CHA_IPTIS_ CONF	Wait for response to message: `CHANGE PRIMARY STATE OF ISDN PATH TERMINATION (PT) TO IN SERVICE`
		I_CHA_IPTIS_ REQ	Send message: `CHANGE PRIMARY STATE OF ISDN PT OBJECT TO IN SERVICE`
		I_CHA_ IPTOOS_ CONF	Wait for response to message: `CHANGE PRIMARY STATE OF ISDN PT TO OUT OF SERVICE`
		I_CHA_ IPTOOS_ CONF1	Wait for response to message: `CHANGE PRIMARY STATE OF ISDN PT TO OUT OF SERVICE`
		I_CHA_ IPTOOS_ REQ	Send message: `CHANGE PRIMARY STATE OF ISDN PT OBJECT TO OUT OF SERVICE`

Note: The above values that end in 1 are for delete and create operations.

Base SCM Access (continued)

Datafilling table RDTLT (Sheet 2 of 9)

Field	Subfield or refinement	Entry	Explanation and action
		I_CHA_ IPTOOS_ REQ1	Send message: CHANGE PRIMARY STATE OF ISDN PT OBJECT TO OUT OF SERVICE
		I_CHA_LTIS_ CONF	Wait for response to message: CHANGE PRIMARY STATE OF ISDN LINE TERMINATION (LT) TO IN SERVICE
		I_CHA_LTIS_ REQ	Send message: CHANGE PRIMARY STATE OF ISDN LT OBJECT TO IN SERVICE
		I_CHA_ LTOOS_ CONF	Wait for response to message: CHANGE PRIMARY STATE OF ISDN LT TO OUT OF SERVICE
		I_CHA_ LTOOS_ CONF1	Wait for response to message: CHANGE PRIMARY STATE OF ISDN LT TO OUT OF SERVICE
		I_CHA_ LTOOS_REQ	Send message: CHANGE PRIMARY STATE OF ISDN LT OBJECT TO OUT OF SERVICE
		I_CHA_ LTOOS_REQ 1	Send message: CHANGE PRIMARY STATE OF ISDN LT OBJECT TO OUT OF SERVICE
		I_CRE_ A1DCT_ CONF	Wait for response to message: CREATE FIRST DS-0 CHANNEL TERMINATION (CT) OBJECT
		I_CRE_ A1DCT_REQ	Send message: CREATE FIRST DS-0 CT OBJECT
		I_CRE_ A2DCT_ CONF	Wait for response to message: CREATE SECOND DS-0 CT OBJECT
Note: The above values that end in 1 are for delete and create operations.			

Datafilling table RDTLT (Sheet 3 of 9)

Field	Subfield or refinement	Entry	Explanation and action
		I_CRE_ A2DCT_REQ	Send message: `CREATE SECOND DS-0 CT OBJECT`
		I_CRE_ AQDCT_ CONF	Wait for response to message: `CREATE QDS-0 CT OBJECT`
		I_CRE_ AQDCT_REQ	Send message: `CREATE QDS-0 CT OBJECT`
		I_CRE_ICT_ CONF	Wait for response to message: `CREATE ISDN CT OBJECT`
		I_CRE_ICT_ REQ	Send message: `CREATE ISDN CHANNEL TERMINATION (CT) OBJECT`
		I_CRE_IPT_ CONF	Wait for response to message: `CREATE ISDN PT OBJECT`
		I_CRE_IPT_ REQ	Send message: `CREATE ISDN PATH TERMINATION (PT) OBJECT`
		I_CRE_LT_ CONF	Wait for response to message: `CREATE ISDN LT OBJECT`
		I_CRE_LT_ REQ	Send message: `CREATE ISDN LINE TERMINATION (LT) OBJECT`
		I_DEL_IPT_ CONF	Wait for response to message: `DELETE PT AND ALL SUBTENDING OBJECTS`
		I_DEL_IPT_ CONF1	Wait for response to message: `DELETE PT AND ALL SUBTENDING OBJECTS`
Note: The above values that end in 1 are for delete and create operations.			

Base SCM Access (continued)

Datafilling table RDTLT (Sheet 4 of 9)

Field	Subfield or refinement	Entry	Explanation and action
		I_DEL_IPT_REQ	Send message: DELETE ISDN PT AND ALL SUBTENDING OBJECTS
		I_DEL_IPT_REQ1	Send message: DELETE ISDN PT AND ALL SUBTENDING OBJECTS
		I_DEL_IPT_CONF1	Wait for response to message: DELETE PT AND ALL SUBTENDING OBJECTS
		I_DEL_IPT_REQ	Send message: DELETE ISDN PT AND ALL SUBTENDING OBJECTS
		I_DEL_IPT_REQ1	Send message: DELETE ISDN PT AND ALL SUBTENDING OBJECTS
		I_DEL_LT_CONF	Wait for response to message: DELETE LT AND ALL SUBTENDING OBJECTS
		I_DEL_LT_CONF1	Wait for response to message: DELETE LT AND ALL SUBTENDING OBJECTS
		I_DEL_LT_REQ	Send message: DELETE ISDN LT AND ALL SUBTENDING OBJECTS
		I_DEL_LT_REQ1	Send message: DELETE ISDN LT AND ALL SUBTENDING OBJECTS
		P_ACCESS_DONE	Line objects provisioning for analog or electronic business set (EBS) line done.
Note: The above values that end in 1 are for delete and create operations.			

Datafilling table RDTLT (Sheet 5 of 9)

Field	Subfield or refinement	Entry	Explanation and action
		P_CHA_LTIS_CONF	Wait for response to message: `CHANGE PRIMARY STATE OF LINE TO IN SERVICE`
		P_CHA_LTIS_REQ	Send message: `CHANGE PRIMARY STATE OF LINE TO IN SERVICE`
		P_CHA_LTOOS_CONF	Wait for response to message: `CHANGE PRIMARY STATE OF LINE TO OUT OF SERVICE`
		P_CHA_LTOOS_CONF1	Wait for response to message: `CHANGE PRIMARY STATE OF LINE TO OUT OF SERVICE`
		P_CHA_LTOOS_REQ	Send message: `CHANGE PRIMARY STATE OF LINE TO OUT OF SERVICE`
		P_CHA_LTOOS_REQ1	Send message: `CHANGE PRIMARY STATE OF LINE TO OUT OF SERVICE`
		P_CRE_LT_CONF	Wait for response to message: `CREATE ANALOG OR EBS LT OBJECT`
		P_CRE_LT_REQ	Send message: `CREATE ANALOG OR EBS LINE TERMINATION (LT) OBJECT`
		P_DEL_LT_CONF	Wait for response to message: `DELETE LT AND ALL SUBTENDING OBJECTS`
		P_DEL_LT_CONF1	Wait for response to message: `DELETE LT AND ALL SUBTENDING OBJECTS`
Note: The above values that end in 1 are for delete and create operations.			

Base SCM Access (continued)

Datafilling table RDTLT (Sheet 6 of 9)

Field	Subfield or refinement	Entry	Explanation and action
		P_DEL_LT_ REQ	Send message: DELETE LT AND ALL SUBTENDTING OBJECTS
		P_DEL_LT_ REQ1	Send message: DELETE LT AND ALL SUBTENDTING OBJECTS
		P_MOD_LT_ CONF	Wait for response to message: MODIFY LT OBJECTS
		P_MOD_LT_ REQ	Send message: MODIFY ANALOG OR EBS LINE TERMINATION OBJECT
TRANSP		refer to entries below	The Rdt line processor transport states. This field identifies the next operation that the line provisioning process must perform. This process creates the objects for the transport portion of the cross-connect.
		TRANSP_NIL	There is no action required.
		TRANSP_ DONE	All operations are complete.
		I_ADD_TDPT _CONF	Wait for response to message: UPDATE DS-0 CT OBJECT
		I_ADD_TDPT _REQ	Send message: UPDATE TRANSPORT SIDE DS-0 CT OBJECT TO INCLUDE DS0 PT OBJECT
		I_CHA_ TDPTIS_ CONF	Wait for response to message: CHANGE PRIMARY STATE OF DS-0 PT TO OUT OF SERVICE
		I_CHA_ TDPTIS_REQ	Send message: CHANGE PRIMARY STATE OF DS-0 PT OBJECT TO IN SERVICE
Note: The above values that end in 1 are for delete and create operations.			

Datafilling table RDTLT (Sheet 7 of 9)

Field	Subfield or refinement	Entry	Explanation and action
		I_CHA_ XCOOS_ CONF1	No current use.
		I_CHA_ XCOOS_ REQ1	No current use.
		I_CRE_TDPT _CONF	Wait for response to message: `CREATE DS-0 PT OBJECT`
		I_CRE_TDPT _REQ	Send message: `CREATE TRANSPORT SIDE DS-0 PATH TERMINATION (PT) OBJECT`
		I_CRE_ TQDCT_ CONF	Wait for response to message: `CREATE QDS-0 CT OBJECT`
		I_CRE_ TQDCT_REQ	Send message: `CREATE TRANSPORT SIDE QDS-0 CT OBJECT`
		I_CRE_XC_ CONF	Wait for response to message: `CROSS CONNECTION OBJECT`
		I_CRE_XC_ REQ	Send message: `CREATE TRANSPORT SIDE CROSS CONNECTION OBJECT`
		I_DEL_TDPT_ CONF	Wait for response to message: `DELETE DS-0 PT OBJECT`
		I_DEL_TDPT_ REQ	Send message: `DELETE DS-0 PT OBJECT`
		I_DEL_TQDC T_CONF	Wait for response to message: `DELETE QDS-0 CT OBJECT`
Note: The above values that end in 1 are for delete and create operations.			

Base SCM Access (continued)

Datafilling table RDTLT (Sheet 8 of 9)

Field	Subfield or refinement	Entry	Explanation and action
		I_DEL_ TQDCT_ CONF1	Wait for response to message: `DELETE QDS-0 CT OBJECT`
		I_DEL_ TQDCT_REQ	Send message: `DELETE QDS-0 CT OBJECT`
		I_DEL_ TQDCT_ REQ1	Send message: `DELETE QDS-0 CT OBJECT`
		I_DEL_XC_ CONF	Wait for response to message: `DELETE CROSS CONNECTION OBJECT`
		I_DEL_XC_ CONF1	Wait for response to message: `DELETE CROSS CONNECTION OBJECT`
		I_DEL_XC_ REQ	Send message: `DELETE CROSS CONNECTION OBJECT`
		I_DEL_XC_ REQ1	Send message: `DELETE CROSS CONNECTION OBJECT`
CONTMARK		+ or $	Enter + if the next record contains additional information for this tuple. If the next record does not contain additional information, enter $ to indicate the end of the tuple.
REQUESTR		refer to entries below	Requesting process. This field allows table control to display the process that uses RDTLT resources. The information below allows the table control software to determine where the request initiated.
		REQUESTOR _NIL	No requestor.
		REQUESTOR _RDTLP	The RDTLP process initiated the request.

Note: The above values that end in 1 are for delete and create operations.

Datafilling table RDTLT (Sheet 9 of 9)

Field	Subfield or refinement	Entry	Explanation and action
		REQUESTOR_DUMPREST	Dump and restore process initiated the request.
		REQUESTOR_JFILE	Request initiated from journal file update process.
CRV		0 to 4095	Call reference value range. This field represents the call reference value range.
LOPDONE		Y or N	Line object provisioning done. This field is set to Y (yes) when all line object provisioning is complete.
DELALL		Y or N	Delete all tuples. This field is set to Y (yes) when table control software accepts a request. The request is to delete all entries in table RDTLT.
LTIS		Y or N	Line termination in-service. This field is set to Y (yes) when the line termination object (LTO) is in service.
INSMOD		Y or N	In service modifier. This field is set to Y (yes) to identify if a request to update the in service attributes of the LTO is sent.
Note: The above values that end in 1 are for delete and create operations.			

Datafill example for table RDTLT

Sample datafill for table RDTLT appears in the following example.

MAP display example for table RDTLT

```
RDTLTKEY          ACCESS           TRANSP      NAILUP1
NAILUP2       REQUESTR     CRV      LOPDONE  DELALL  LTIS
INSMOD       LTCLASS    QDSOINFO        XCINFO
-------------------------------------------------------
CARY 03 01 01 06  P_ACCESS_DONE  TRANSP_NIL  NAILUP_NIL
NAILUP_NIL  REQUESTOR_NIL   1      Y      N      Y
   N       ANALOG_LT      000         0 0
```

Base SCM Access (continued)

Datafilling table LENLINES

Table LENLINES contains the following data:

- site name assigned to remote location.
- party where DN is assigned.
- ringing code assigned to a DN.

Note: You can add a tuple that relates to RDT in this table if the CARDCODE field in table LNINV is RDTLSG, RDTCON or RDTMPY.

Datafilling in table SCGRP

Table scan group (SCGRP) lists the PEC and location of scan groups that provide scan points for line features. Each scan card provides a total of 14 scan points subdivided into two scan groups. You must assign each scan group to a TM circuit number.

Note: Assign lines at a remote location to scan points that belong to scan groups located at the remote location.

The datafill for Base SCM Access for table SCGRP appears in the following table. Only those fields that apply directly to Base SCM Access appear.

Datafilling in table SCGRP

Field	Subfield or refinement	Entry	Explanation and action
SCGRPNO		0-511	Scan group. Enter the scan group number.
TMTYPE		MTM, RMM, or RSM	Trunk module type. Enter the type of the trunk module that the miscellaneous scan card mounts on.
TMNO		0-255	Trunk module number. Enter the number assigned to the MTM, RMM, or RSM where the miscellaneous scan card mounts.
TMCKTNO		0-23	Trunk module circuit number. Enter the trunk module circuit number on the MTM, RMM or RSM. The scan group is assigned.
CARDCODE		0X10AA	Enter the PEC of the scan card.

Datafill example for table SCGRP

Sample datafill for table SCGRP appears in the following example.

MAP display example for table SCGRP

```
SCGRPNO     TMTYPE     TMNO     TMKTNO    CARDCODE
-------------------------------------------------
      0        MTM        1         14      0X10AA
      1        MTM        1         15      0X10AA
      2        RSM        1         12      0X10AA
      3        RSM        1         13      0X10AA
```

Datafilling table SDGRP

The product engineering code (PEC) and the location of signal distribution (SD) groups appear in table signal distributor group (SDGRP). These SD groups provide SD points for line features. Each SD card provides 14 SD points that divide into two SD groups. Each SD group has a TM circuit number.

Note: Assign lines at a remote location to SD points that belong to SD groups at the remote location.

Use the data in table SDGRP to set up mechanized loop testing of RDT subscriber lines. This table defines the SD groups that mechanized loop testing uses. Mechanized loop testing uses an applique circuit. Table LTDSD defines the SD points that drive the applique circuit.

The following table identifies the specified datafill for Base SCM Access for table SDGRP. The table explains the fields that apply directly to Base SCM Access.

Datafilling table SDGRP (Sheet 1 of 2)

Field	Subfield or refinement	Entry	Explanation and action
SDGRPNO		0-511	Signal distributor group. Enter the signal distributor group number.
TMTYPE		MTM, RMM or RSM	Trunk module type. Enter the type of trunk module. The signal distributor card is mounted.
TMNO		0-2047	Trunk module number. Enter the number assigned to the maintenance trunk module (MTM), remote maintenance module (RMM) or remote service module (RSM). The signal distributor card is mounted.

Base SCM Access (continued)

Datafilling table SDGRP (Sheet 2 of 2)

Field	Subfield or refinement	Entry	Explanation and action
TMCKTNO		0-29	Trunk module circuit number. Enter the trunk module circuit number on the MTM, RMM, or RSM. The signal distributor group is assigned.
CARDCODE		2X57AA	Cardcode. Enter the PEC of the signal distributor card.

Datafill example for table SDGRP

The following example shows sample datafill for table SDGRP.

MAP display example for table SDGRP

```
SDGRPNO    TMTYPE    TMNO    TMCKTNO     CARDCODE
-----------------------------------------------
      0       MTM       0         14       2X57AA
      1       MTM       0         15       2X57AA
      2       RSM       0         14       2X57AA
      3       RSM       0         15       2X57AA
```

Datafilling table LTDSD

Table line test desk signal distribution (LTDSD) identifies the SD points that drive the applique circuit during mechanized loop testing. The system uses the applique circuit with an NT2X90AD test trunk. This circuit reports line card diagnostic results to mechanized loop testing equipment. Testing equipment includes a mechanized loop tester or local test desk.

The applique circuit uses four SD points. These points belong to a miunimum of one SD group defined in table SDGRP. Enter this table before table LTDSD. The SD points do not need to belong to the same SD group.

Enter table LTDSD after table TRKMEM. Table TRKMEM serves as a key identification in table LTDSD. Valid trunk group members belong to trunk group type test desk (TD), version MLT or TSTDK.

The following table identifies the specified datafill for Base SCM Access for table LTDSD. The fields that apply directly to Base SCM Access appear in the table.

Datafilling table LTDSD

Field	Subfield or refinement	Entry	Explanation and action
TDMEM		see subfields	Trunk member. This field consists of subfields common language location identifier (CLLI) and trunk member name (MEMNAME).
	CLLI	alphanumeric	Common language location identifier (CLLI). Enter the code assigned in table CLLI.
	MEMNAME	0-9999	Trunk member name. Enter the trunk member that uses the SD circuit card.
TDSDGRP1		0-511	Test desk signal distribution group 1. Enter the SD group to which the first SD point belongs.
TDSDPT1		0-6	Test desk signal distribution point 1. Enter the number of the first SD point that drives relay DS-1 in the applique circuit.
TDSDGRP2		0-511	Test desk signal distribution group 2. Enter the SD group to which the second SD point belongs.
TDSDPT2		0-6	Test desk signal distribution point 2. Enter the number of the second SD point that drives the relay DS2 in the applique circuit.
TDSDGRO3		0-511	Test desk signal distribution group 3. Enter the SD group to which the third SD point belongs.
TDSDPT3		0-6	Test desk signal distribution point 3. Enter the number of the third SD point that drives relay DS3 in the applique circuit.
TDSDGRP4		0-511	Test desk signal distribution group 4. Enter the SD group to which the fourth SD point belongs.
TDSDPT4		0-6	Test desk signal distribution point 4. Enter the number of the fourth SD point that drives relay DS4 in the applique circuit.

Datafill example for table LTDSD

The following example shows sample datafill for table LTDSD.

Base SCM Access (continued)

MAP display example for table LTDSD

```
TDMEM TDSDGRP1 TDSDPT1 TDSDGRP2 TDSDPT2 TDSDGRP3 TDSDPT3
 TDSDGRP4 TDSDPT4
-------------------------------------------------------

MLTTRK 1     6       5        6       6        7       0
         7       1
```

Datafilling table MTAMDRVE

Table metallic test access minibar driver (MTAMDRVE) is a matrix of vertical and horizontal crosspoints, like a minibar circuit. These crosspoints connect specified verticals to horizontals in the network.

The MTA connects specified test equipment to a circuit that requires testing. The MTA connects this test equipment to a horizontal crosspoint through a test bypass pair that connects to a vertical crosspoint.

The interconnection of a number of smaller minibar circuits allows the construction of an MTA network of the required size. These circuits are building block components, as the following diagram shows.

The NT3X09AA driver allows metallic test access to remote line concentrating devices like the RDT. The NT3X09AA is a four vertical-by-eight horizontal circuit. The NT3X09BA is an eight vertical-by-eight horizontal circuit.

MTA matrix

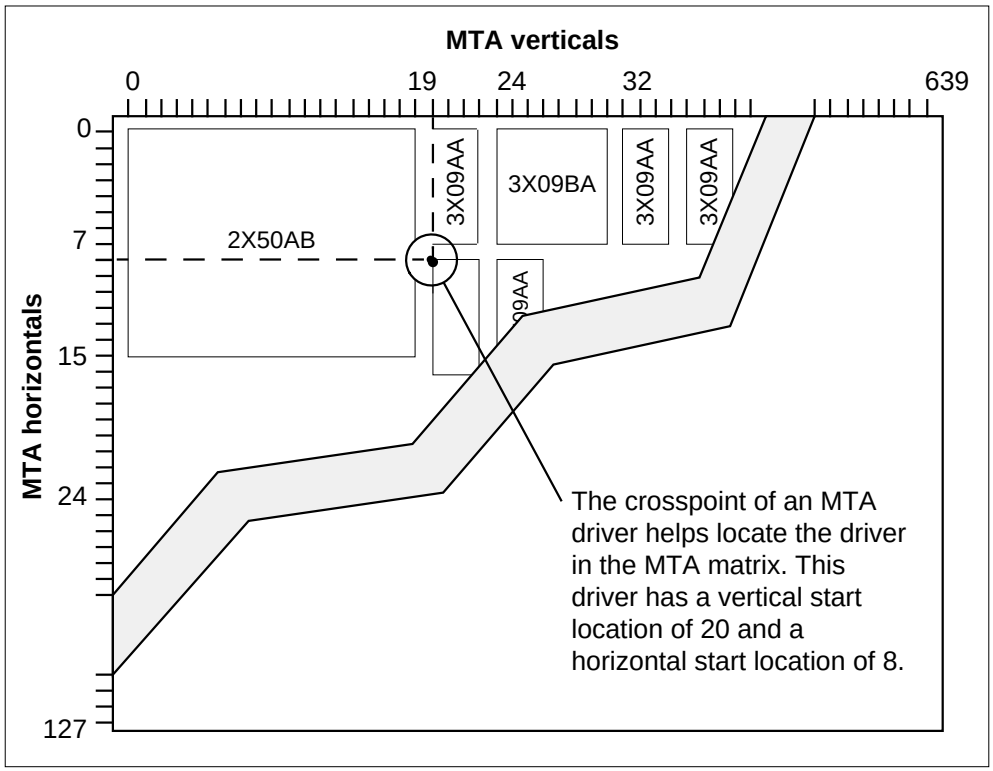

Table MTAMDRVE specifies the location and the type of MTA. The NT3X09 driver has relays on the card and does not require an associated minibar switch. The 0, 0 crosspoint in the matrix identifies each MTA.

The following figures correspond to the MTA datafill examples at the end of this chapter.

Base SCM Access (continued)

Multiple RFTs on one test bypass pair

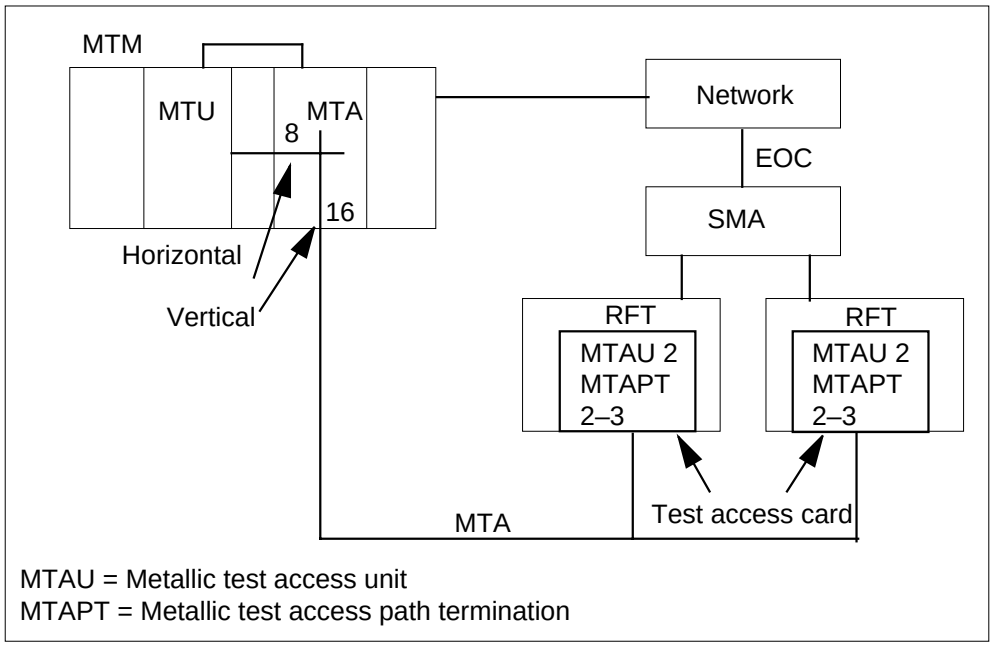

MTAU = Metallic test access unit
MTAPT = Metallic test access path termination

Metallic test bypass for only one RFT

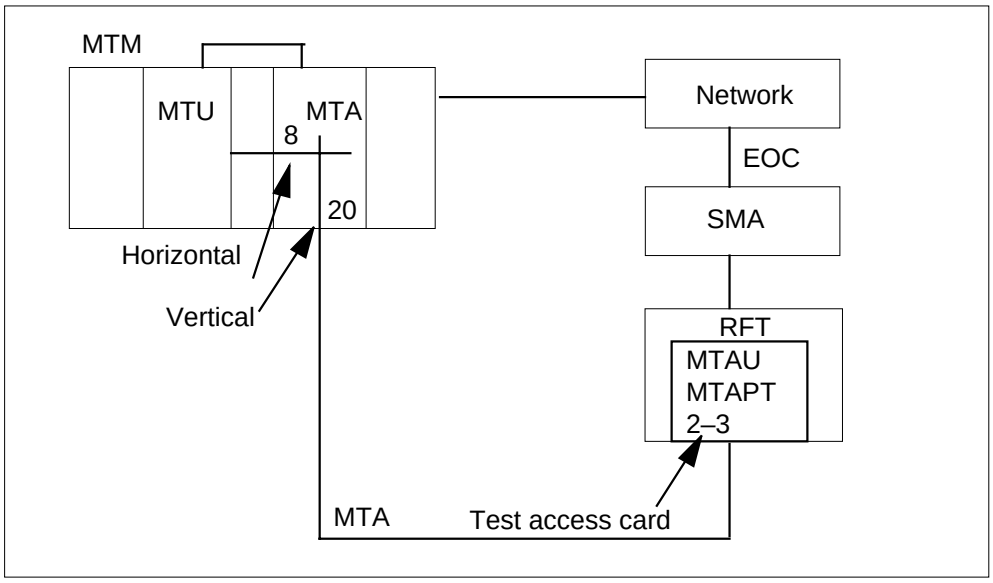

The following table identifies the specified datafill for Base selective call messaging Acces (Base SCM Access) for table MTAMDRVE. The fields that apply directly to Base SCM Access appear in this table.

Datafilling table MTAMDRVE

Field	Subfield or refinement	Entry	Explanation and action
MTAMEM		0-255	Metallic test access minibar driver member. Enter the MTA driver member number. This number is the key to this table.
VERT		0-639	MTAM driver vertical start location. Enter the vertical start location for the MTAM driver.
HORIZ		0-127	MTAM driver horizontal start location. Enter the horizontal start location for the MTAM driver.
TMTYPE		MTM	Trunk module type. Enter the type of trunk module that contains the MTA.
TMNO		0-255	Trunk module number. Enter the number assigned to the maintenance trunk module.
TMCKTNO		0-28 (even numbers)	Trunk module circuit number. Enter the circuit number of the MTM that has the MTA assigned.
MTACARD		2X50AB, 3X09AA, or 3x09BA	MTAM driver card. Enter the card code for the MTA card.

Enter the example for table MTAMDRVE

The following example shows sample datafill for table MTAMDRVE.

MAP display example for table MTAMDRVE

```
MTAMEM  VERT HORIZ     TMTYPE  TMNO TMCKTNO  MTACARD
------------------------------------------------------
    1     20    8        MTM     1      10   3X09BA
```

Datafilling table MTAVERT

Table metallic test access vertical connection (MTAVERT) identifies the vertical connectivity to the MTA matrix. Table MTAVERT changes to allow the entry of one or two verticals for one or more RDTs.

Base SCM Access (continued)

Two types of connections that can occur are single and multiple connections. The SMA system uses the multiple connection. A maximum of 32 RDTs can share a metallic test pair.

The following table identifies the specified datafill for Base SCM Access for table MTAMDRVE. The fields that apply directly to Base SCM Access appear in this table.

Datafilling table MTAVERT

Field	Subfield or refinement	Entry	Explanation and action
VERT		0-1023	Vertical. Enter the MTA vertical connection number.
VERTCONN		S or M	Vertical connection. Enter S or M to indicate single or multiple connections. For multiple connections, a maximum of 32 RDTs can share a metallic test pair.
SELECTOR		O or L	Selector. When selector O is in use, the entry in VERTCONN is M. Enter subfields SITE, FRAME and UNIT after the selector. This subfield is a vector of a maximum of 32 entries. When L is in use, the entry in VERTCONN is S. Enter the subfields SITE, FRAME and UNIT.
	SITE	alphanumeric	Site. Enter the name selected for the remote location.
	FRAME	0-511	Frame. Enter the frame number.
	UNIT	0-9	Unit number. Enter the unit number.
	CONTMARK	+ or $	*Continuation mark* : Enter a plus sign (+) when the record that follows specifies additional data. For any other condition, enter a dollar sign ($) after last record.

Datafill example for table MTAVERT

The following example shows sample datafill for table MTAVERT.

MAP display example for table MTAVERT

```
VERT   VERTCONN
       (VERT_CONN  SELECTOR   LINE_MOD
-------------------------------------------------------
16        M (O RDT1 00 0 )  (O RDT1 01 0)
17        S (O RDT1 02 0 )
18        S (O RDT1 03 0 )
19        S (L RDT1 04 0 )
```

Datafilling table MTAHORIZ

Table metallic test access horizontal connection (MTAHORIZ) lists the assignment of horizontal agents to a horizontal. The table lists the assignment of agents to a horizontal group of metallic test access minibars. Horizontal agents include the following:

- metallic test units (MTU)
- operator verification
- metallic jacks (MJACK)
- incoming test access trunks
- extended metallic test access
- short circuits

Different horizontal agents can use the same horizontal. The agents must be associated with different metallic test access minibars or horizontal groups. A maximum of 160 different horizontal agents can use a specified horizontal.

A maximum of 32 MTAMs can connect to a single horizontal agent. The system can use a horizontal agent can only one time.

A host switching unit can have an LTU assigned. When this condition occurs, the system multiplies the horizontal with the LTU assigned to all minibar switches. The minibar switches are assigned to the host switching unit.

A remote location can have an LTU assigned. When this condition occurs, the system multiplies the horizontal with the LTU assigned to all minibar switches. The minibar switches are assigned to the remote location.

The minibar switch can be at the host switching unit. When this event occurs, limits for the assignment of incoming test and operator verification trunks are not present. Each incoming test access trunk and operator verification trunk requires one horizontal.

Base SCM Access (continued)

The MTA configuration can be small or medium. When this event occurs, the system multiplies the horizontals with the incoming test access and operator verification trunks assigned. This multiplication occurs to minibar switches at the host switching unit.

When the minibar switch is remote from the host switching unit, all horizontals are available. The horizontals are available for the assignment of incoming test access trunks and operator verification trunks. The horizontals are available for the extension of metallic test access feature.

The following components require one horizontal:

- each incoming test access trunk
- operator verification trunk
- each vertical on the host minibar switch assigned to a horizontal on the minibar switch. The minibar switch is at the remote or host location.

The limit for the number of metallic jacks in each DMS switch is 256.

Refer to tables TRKGRP, TRKSGRP and TRKMEM to assign LTUs, incoming test access and operator verification trunks. Assign these components to trunk group, trunk subgroup and trunk member tables.

The user must enter an MTU in table TRKMEM before the user adds the MTU to table MTAHORIZ. When the user deletes the MTU from table TRKMEM, the system marks the associated tuple in table MTAHORIZ as deleted. The system restores the tuple when the user enters the MTU in table TRKMEM again.

The memory for this table is allocated to a maximum of 2000 tuples.

The MTU replaces the LTU. When you make entries for an LTU, a warning can appear at the MAP terminal. This warning explains that the correct entry is MTU.

Base SCM Access (continued)

The following table identifies the specified datafill for Base SCM Access for table MTAHORIZ. The fields that apply directly to Base SCM Access appear in the table.

Datafilling table MTAHORIZ (Sheet 1 of 3)

Field	Subfield or refinement	Entry	Explanation and action
HORIZ		0-127	MTA horizontal. Enter the MTA horizontal that the test equipment (horizontal agent) connects to.
HORIZGRP		0-159	MTA horizontal group. Enter the horizontal group number and the horizontal agent as tuples. The horizontal group allows the assignment of different test equipment on the same MTA horizontal.
HORIZAGT		see subfields	Horizontal agent. This field contains several subfields that depend on the value of SELECTOR in use.
	SELECTOR	S, L, T, B, E, MJ, J, and LA	Selector. Enter S for a timed short circuit. Enter L for LTU or MTU assignment. Complete subfields CLLI, EXTRKNM and ALTUSE. Enter T for incoming test access or operator verification trunk assignment. Complete subfields CLLI and EXTRKNM. Enter B for a board-to-board dedicated horizontal. Complete subfield BBTNR. Enter E to multiply a horizontal of a minibar switch from a host or remote to the vertical of a host minibar switch. Complete subfield EMTAVERT. Enter MJ for metallic connection to the tip and ring of the subscriber line. Complete subfields CLLI and MJACKNUM. Selectors J and LA are for licensee use only.

Base SCM Access (continued)

Datafilling table MTAHORIZ (Sheet 2 of 3)

Field	Subfield or refinement	Entry	Explanation and action
	CLLI	LTU, MTU, MJACK, or alphanumeric	Common language location identifier. Enter LTU for line test unit. Enter MTU for metallic test unit. For operator verification or an incoming test access trunk, enter the alphanumeric code that identifies this trunk group in table CLLI. Enter MJACK for metallic jack.
	EXTRKNM	0-9999	External trunk number. Enter the external trunk number assigned in table TRKMEM. This number is assigned to the line test unit, metallic test unit, operator verification trunk, or the incoming test access trunk.
	ALTUSE	Y or N	Automatic line test use. Enter Y to use line test equipment for automatic line testing (ALT). During other conditions, enter N.
	BBTNR	0-7	Board-to-board testing number. Enter the number of the board-to-board set associated with this horizontal.
	EMTAVERT	0-639	Extended metallic test access column. Enter the associated vertical on the MTA in the host to which the horizontal connects.
	MJACKNUM	1-256	Metallic jack number. Enter the metallic jack number when the entry in subfield CLLI is MJACK.
MTAGRP		numeric	MTA group. This field consists of a list of MTA drivers that multiply to the test equipment. This field is a vector of a maximum of 32 multiples of subfields MTAMEM and HORIZ.
	MTAMEM	0-255	MTA minibar driver member. Enter the MTAM driver member number that the horizontal connects to.

Datafilling table MTAHORIZ (Sheet 3 of 3)

Field	Subfield or refinement	Entry	Explanation and action
	HORIZ	0	This field is read-only. This field provides information about the horizontal to which MTA drivers connect. Enter 0 to satisfy table control.
	CONTMARK	+ or $	Continuation mark. Enter a plus sign (+) when the record that follows specifies additional data. During other conditions, enter a dollar sign ($) after the last record.

Datafill example for table MTAHORIZ

The following example shows sample datafill for table MTAVERT.

MAP display example for table MTAHORIZ

```
HORIZ     HORIZGRP          HORIZAGT          MTAGRP
------------------------------------------------------
8      0       L          MTU   0 Y   ( 0 0) ( 2 0)$
```

Datafilling table AMAOPTS

Table AMA options (AMAOPTS) controls the activation and scheduling of the recording options for automatic message accounting (AMA). Table AMAOPTS contains one tuple for each option. This table contains the default values for each option.

The following table identifies the specified datafill for the Base SCM Access for AMAOPTS. The fields that apply directly to Base SCM Access appear in this table.

Datafilling table AMAOPTS (Sheet 1 of 2)

Field	Subfield or refinement	Entry	Explanation and action
OPTION			Option. This field consists of subfield AMAOPT.
	AMAOPT	alphanumeric	AMA option. Enter the appropriate option for the application.

Base SCM Access (continued)

Datafilling table AMAOPTS (Sheet 2 of 2)

Field	Subfield or refinement	Entry	Explanation and action
SCHEDULE			Schedule. This field consists of many subfields. Subfield AMASEL appears.
	AMASEL	PERIODIC, OFF, or DEFAULT	AMA selector. Enter the appropriate AMA selector for your application. ***Note:*** To enable the DSCWID conference audit, set AMASEL to PERIODIC, or DEFAULT when the DEFAULT is PERIODIC.

Datafill example for table AMAOPTS

The following example shows sample datafill for table AMAOPTS.

MAP display example for table AMAOPTS

```
>POS DSCWID_CONF_AUDIT
DSCWID_CONF_AUDIT
>CHA
TUPLE TO BE CHANGED:
DSCWID_CONF_AUDIT OFF
ENTER Y TO CONFIRM, N TO REJECT, OR E TO EDIT
>E
AMASEL: OFF
>PERIODIC
ONDATE:
>940915
ONTIME:
>0000
SCHEDULE:
>24 HRS
TUPLE TO BE CHANGED:
DSCWID_CONF_AUDIT PERIODIC 940915 0000 24  HRS
ENTER Y TO CONFIRM, N TO REJECT, OR E TO EDIT
Y
```

Datafilling table TEXTPHRS

Virtual screen list editing (VSLE) and other display features use table text phrases (TEXTPHRS). This table contains instructional and prompting text strings. Separate logical display phrases contain these text strings.

The following table identifies the specified datafill for Base SCM Access for TEXTPHRS. The fields that apply directly to Base SCM Access appear in this table.

Datafilling table TEXTPHRS

Field	Subfield or refinement	Entry	Explanation and action
PHRSNAME		alphanumeric	Phrase name. Enter the 2 to 8 character name of the phrase.
PHRASE		alphanumeric	Phrase. Enter the test string that appears as instructional or prompting messages. This field is a vector of a maximum of 40 characters. This field can display 20 characters at a time.
HLMODE		see subfields	High light mode. This field contains subfields POSITION and MODE. This field can define a maximum of four highlight modes. Each mode consists of a position and a mode.
	POSITION	0 to 40	POSITION. Specifies the character position of the change in highlight mode. The table highlights the characters specified in this subfield are according to the selected mode. The characters can continue until the end of the display, or the field can specify the mode position that follows.
	MODE	Normal, Reverse, Grey, or Bold	MODE Enter the required mode. The default mode is NORMAL.

Datafill example for table TEXTPHRS

The following example shows sample datafill for table TEXTPHRS.

MAP display example for table TEXTPHRS

```
PHRSNAME                          PHRASE      HLMODE
------------------------------------------------------
CLCOUNT            GENERIC_CALLOG_ITEM_COUNT  $
CLNEWCT             GENERIC_CALLOG_NEW_COUNT  $
CLTITLE                 CALL_LOGGING_SERVICE  $
```

Base SCM Access (continued)

Datafilling table TEXTLOG

VSLE and other display features use table logical display text (TEXTLOG). Table TEXTLOG contains the names of the phrases contained in a logical display phrase.

The following table identifies the specified datafill for Base SCM Access for table TEXTLOG. The fields that apply directly to Base SCM Access appear.

Datafilling table TEXTLOG (Sheet 1 of 2)

Field	Subfield or refinement	Entry	Explanation and action
LPHRSKEY		see subfields	Logical phrase key. Contains subfields application name, language and display number.
	APPLNAME	VSLE, or CALLOG	Application name. Enter the name of the feature application this tuple uses. Enter visual screen list editing (VSLE), or call logging (CALLOG).
	LANGUAGE	NILANG, LANG1, or LANG2	Language. Enter the language in use for the display. NILANG indicates no language.
	DISPNUM	0 to 127	Display number. Enter the numeric index the feature application identifies the display data in the tuple.
DISPTYPE		S, T, or C	Display type. Enter S for standard display. The system uses this display type to wait for SOFTKEY input from the user. The system provides the instructions and displays softkeys. Enter T for transient display. This display type provides an information display. The display indicates results of user actions where the system does not allow input. Enter C for cursor control display. This display type provides instructions. The display type lists softkeys the system uses to wait for SOFTKEY or dual tone multi-frequency (DTMF) keypad input.
LRCI		CENTER, RIGHT, LEFT, or INDENT	Left, right, center, indent. This field is the display justification indicator field. Enter the required mode of justification.

Datafilling table TEXTLOG (Sheet 2 of 2)

Field	Subfield or refinement	Entry	Explanation and action
PHRSLIST		2 to 8 alphanumeric characters	Phrase list. Enter the list as defined in table TEXTPHRS. The list contains a maximum of 16 phrase names. The phrase names make up a single logical display phrase. Enter the phrase names in table TEXTPHRS first.
DEFNLIST		see subfields	Definer list. Contains subfields SOFTKEY, MODE and SKT. This field contains a vector of a maximum of 8 SOFTKEY definer lists.
	SOFTKEY	1 to 33	SOFTKEY. Subfield SOFTKEY is the SOFTKEY definer number from the list of SOFTKEY definer numbers in field DEFNUM of table SOFTKEY. The integer 1 is reserved internally. This action allows a SOFTKEY that is not in use to remain blank.
	MODE	N, H	MODE. Subfield MODE is set to normal (N) or highlight (H).
	SKT	SRV or CPE	SOFTKEY table. Subfield SKT indicates which SOFTKEY table the CPE contains. Enter server (SRV) or customer premises equipment (CPE).

Datafill example for table TEXTLOG

The following example shows sample datafill for table TEXTLOG.

MAP display example for table TEXTLOG

```
         LPHRSKEY  DISPTYPE  LRCI
                        PHRSLIST
                            DEFNLIST
-------------------------------------------------
CALLOG  LANG1     1     S  LEFT
                          (CLTITLE) $
                          (2 N SRV) $
```

Datafilling table SOFTKEY

Table SOFTKEY specifies SOFTKEY information for application services. The index to table SOFTKEY is an application service identifier and a SOFTKEY definer number. Table TEXTLOG refers to entries in table SOFTKEY.

Base SCM Access (continued)

The following table identifies the specified datafill for Base SCM Access for table SOFTKEY. The fields that apply directly to Base SCM Access appear.

Datafilling table SOFTKEY

Field	Subfield or refinement	Entry	Explanation and action
SERVID		alphanumeric	Service identifier. Enter a character string that corresponds to a specified application. This field is a vector of a maximum of eight characters.
DEFNUM		2 to 33	Defining numbers. Enter a number value to identify a SOFTKEY definer for use with the specified application.
LLABEL		alphanumeric	Label. Enter the label that appears on the CPE set display. This label appears on the line that comes before the softkeys. This field is a vector of a maximum of 18 characters.
SLABEL		alphanumeric	Subset of label. Enter a string of characters that correspond to the characters in the long label. These characters are not optional. These characters appear on CPE sets that cannot display long labels. This field is a vector of a maximum of seven characters.
RETURN		0-255	Return. Enter the character string returned to the DMS switch when you press the SOFTKEY that corresponds. This field is a vector of a maximum of 14 characters.

Datafill example for table SOFTKEY

The following example shows sample datafill for table SOFTKEY.

MAP display example for table SOFTKEY

```
SERVID   DEFNUM     LLABEL
                  SLABEL
                                                    RETURN
-------------------------------------------------------
CALLOG     4          TOP
                      TOP
                                                       $
CPE1       5           SOFTK02
                     SK02
                                (48) (50) (39) (78)   $
CPE2       6          SOFTK03
                     SK03
                                (48) (51) (39) (78)   $
```

Datafilling table DSCWDTYP

Table deluxe spontaneous call waiting types (DSCWDTYP) defines different call waiting display with disposition (DSCWID) types. Table DSCWDTYP has a limited size of a maximum of 20 tuples. Use the following keys to enter six tuples in the table:

- PROPRITY
- ADSITIME
- ADSICID
- NODATA
- NOCIDCW
- COMPLETE

The PROPRITY key indicates Proprietary DSCWID. The user cannot change or delete the PROPRITY tuple. The only table control function permitted on the other five tuples is the change command. Operating company personnel can define a maximum of 14 additional DSCWID types. When the user creates a tuple in the NAME field, the user cannot change the tuple. The user can remove or delete a tuple from table DSCWDTYP when field COUNT is set to zero. The user cannot change field COUNT.

Base SCM Access (continued)

The following table identifies the specified datafill for Base SCM Access for table DSCWDTYP. The fields that apply directly to the DSCWID feature of Base SCM Access appear.

Note: The user must enter table DSCWDTYP before the user defines the DSCWID type in table RESOFC.

Datafilling table DSCWDTYP (Sheet 1 of 2)

Field	Subfield or refinement	Entry	Explanation and action
NAME		PROPRITY ADSITIME, ADSICID, NODATA, NOCIDCW, or COMPLETE	DSCWDTYP table key. Enter the name assigned to each DSCWID type. This field includes a maximum of eight characters. ***Note:*** The PROPRITY tuple is fixed to accommodate the proprietary DSCWID feature.
ALERT		SASONLY or SASCAS	Type of alerting tone. Enter the type of alerting supplied.
CID		NOCID, ALLCID, or TIMECID	Caller ID (CID) delivery. Enter the type of CID delivered during the DSCWID session. Options are no data (NOCID), all data of CID type (ALLCID), delivery time and date only (TIMECID).
NONADSI		Y or N	Non analog display services interface (ADSI). This field permits the assignment of DSCWID features to non-ADSI sets. When set to N, non-ADSI sets can only signal ANSWER and RETURN SOFTKEY options. When set to Y, non-ADSI sets can signal all SOFTKEY options in the KEYOPTS field.

Note 1: The user cannot change or delete the PROPRITY tuple. The user can change the other 5 initial tuples.

Note 2: ALERT type must be SASCAS to display ADSI complaint features. SASONLY alerting type provides a shorter call waiting function and uses less SMA resources for non-ADSI type sets.

Note 3: When CID type is ALLCID, this type must have a CID feature assigned in table RESOFC.

Datafilling table DSCWDTYP (Sheet 2 of 2)

Field	Subfield or refinement	Entry	Explanation and action
COUNT		0 to 99,999	Line count. This field contains the number of lines assigned this DSCWID type. ***Note:*** Operating company personel cannot change this field or delete tuples from table DSCWDTYP unless the count is 0. The default value is 0.
KEYOPTS		ALL, ANSWER, RETRN, FWD, BUSY, HOLD, DROP, CONF, DROPFRST, and DROPLAST	Softkey options. This field contains the softkey options available on this DSCWID type. The default value is ALL. ***Note:*** Make changes to fields with multiple entries in the PROMPT mode.

Note 1: The user cannot change or delete the PROPRITY tuple. The user can change the other 5 initial tuples.

Note 2: ALERT type must be SASCAS to display ADSI complaint features. SASONLY alerting type provides a shorter call waiting function and uses less SMA resources for non-ADSI type sets.

Note 3: When CID type is ALLCID, this type must have a CID feature assigned in table RESOFC.

Datafill example for table DSCWDTYP.

The following example shows sample datafill for table DSCWDTYP.

Base SCM Access (continued)

MAP display example for table DSCWDTYP

```
NAME      ALERT    CID  NON  ADSI      COUNT
                                              KEY OPTS
-------------------------------------------------------
PROPRITY  SASCAS   ALLCID      N          0
  (ANSWER)  (FWD)  (BUSY)  (HOLD)  (DROP)  (RETRN) $
ADSITIME  SASCAS  TIMECID      N          0
                                            (ALL) $
ADSICID   SASCAS  ALLCID       N          0
                                            (ALL) $
NODATA    SASONLY  NOCID       Y          0
                                            (ALL) $
NOCIDCW   SASCAS  TIMECID      Y          0
                                            (ALL) $
COMPLETE  SASCAS  ALLCID       Y          0
                                            (ALL) $
```

Translation verification tools

Base SCM Access does not use translation verification tools.

SERVORD

Use SERVORD to add or delete tuples to and from the following tables:

- LTMAP
- KSETINV
- KSETLINE
- KSETFEAT
- IBNLINES
- IBNFEAT
- LENLINES
- LENFEAT
- RESFEAT
- RESOFC

Do not use table editor to add or delete tuples to and from these tables.

Table LTMAP contains information on ISDN signaling group (ISG) numbers, the peripheral module (PM) type, the services provided and the allocation of service channels.

Table IBNLINES contains the line assignments for 500 and 2500 sets assigned to MDC, residential enhanced services (RES) and multiple appearance directory number (MADN) station numbers.

Note: The user can enter attendant consoles through the table editor in table IBNLINES.

Table IBNFEAT identifies the line features assigned MDC lines in table IBNLINES. Each feature assigned to a MDC line requires one entry.

Note: Use the table editor to load the final line data in the switch. Use SERVORD to make additions, deletions and changes to table IBNFEAT.

CAUTION
Loss of service
Use SERVORD to add and delete tuples to and from tables KSETINV, KSETLINE, KSETFEAT, LENLINES, IBNFEAT RESOFC and RESFEAT. Do not use table editor to make these changes. Use table editor to enter test line, and final line data from tape.

Table KSETINV contains inventory data for each card slot assigned to a business set or data unit. The user must enter the line card slot in table LNINV before the user enters the line card slot in table KSETINV.

Table KSETLINE contains data that relates to directory number appearances on business sets and data units. Each directory number-related key on the set requires one entry. The key for table KSETLINE is a line equipment number (LEN). The LEN applies to business sets and data units.

Table KSETFEAT lists line features assigned to business sets, data units and ISDN terminals in table KSETLINE. The key for table KSETFEAT is the LEN for business sets and data units.

Table LENLINES contains the following data:

- site name assigned to remote location
- party with the assigned directory number
- ringing code assigned to a directory number

Table LENFEAT identifies the features assigned to a specified line in table LENLINES.

Base SCM Access (continued)

Table RESOFC contains data that relates to Custom Local Area Signaling Services (CLASS) features. CLASS features are public network features that target the residential market. For each CLASS feature assigned, table RESOFC controls the activation or deactivation of that feature for the complete office. When table RESOFC disables the feature, a CLASS line cannot use that feature. A CLASS line cannot use that feature even when the feature is assigned. Table RESOFC controls the attributes associated with each feature.

Table RESFEAT contains the assignment of CLASS features for residential lines.

Table CDCLENS lists the LENs assigned to a customer group that have the Customer Service Change feature. The LENs assigned in this table can only be assigned in tables INBLINES or KSETINV.

SERVORD limits

The following SERVORD limits apply to Base SCM Access:

- Line assignments for stations with 500 and 2500 sets are assigned in table LENLINES. These sets must not be assigned to a MDC or RES customer group. Line assignment for business sets and data units occurs in table KSETLINE.
- You can add a tuple related to the RDT in table IBNFEAT when field CARDCODE in table LNINV appears as RDTLSG.
- You can use table control or service order with the customer data changed (CDC) option to add LENs to table IBNLINES or KSETINV. When you make these additions, the system adds the LENs to table CDCLENS. When you delete the entry from table CDCLENS, the system deletes option CDC from a line.
- Table KSETINV can occur in different formats. The only format that applies is the format for business sets that use a LEN.
- You can add a tuple related to the RDT in tables KSETINV and KSETFEAT. Field CARDCODE in table LNINV must appear as RDTEBS for this event to occur.
- You can add a tuple that relates to the Remote Digital Terminal (RDT) in table LENLINES. Field CARDCODE in table LNINV must be RDTLSG or RDTCON for this event to occur.
- You can add a tuple that relates to the RDT in table LENFEAT. Field CARDCODE in table LNINV must be RDTLS, RDTLSG or RDTCON for this event to occur.

Base SCM Access (continued)

SERVORD prompts

The following table identifies the SERVORD prompts used to add a 1FR line to the Base SCM Access. Refer to the *Servord Reference Manual* for a complete description of SERVORD commands and prompts.

SERVORD prompts for Base SCM Access

Prompt	Valid input	Explanation
DN	numeric	Directory number to add.
LCC	alphanumeric	Line class code.
LATANAME	alphanumeric	Local access and transport area name.
LTG	numeric	Line treatment group.
LEN or LTID	numeric	Line equipment number or logical terminal id.
OPTION	alphanumeric or $	Options assigned to the line.

SERVORD example for adding Base SCM Access

The following SERVORD example describes using the NEW command to add a 1FR line to the Base SCM Access.

Base SCM Access (continued)

SERVORD example for Base SCM Access in prompt mode

```
>NEW
and pressing the Enter key.

SONUMBER:   NOW 94 5 11 AM
>
and pressing the Enter key.
DN:
> 2780011
and pressing the Enter key.
LCC:
> 1FR
and pressing the Enter key.
LATANAME:
> NILLATA
and pressing the Enter key.
LTG
>0
and pressing the Enter key.
LEN or LTID:
>RFT1 0 0 2 0
and pressing the Enter key.
OPTION
> $
and pressing the Enter key.
```

SERVORD example for Base SCM Access in no-prompt mode

```
> NEW 2780011 1FR NILLATA 0 RFT1 0 0 2 0 $
```

Interpreting a LEN The following fields of the LEN define the RFT:

- SITE
- FRAME
- UNIT
- SHELF (This field defines the shelf number. The possible range is 1-22.)
- SLOT (This field defines the slot number. The possible range is 1-99. For the RFT, the range is 1-96. The maximum number of lines for each shelf is 96. Since the maximum number of lines is 2048, the last shelf is limited to 32. However, the RFT currently has a hardware limitation of 1344 lines.)

SERVORD examples for adding DSCWID options to a subscriber line

The following SERVORD examples describe using the ADO command to apply the DSCWID feature to the SMA. For this example, assume the following conditions are present in table RESOFC:

- the default DSCWID type (DTYPE) is set to ADSITIME.
- the DSCWID conference (AMA) status is set to NONE.
- the DSCWID default treatment (DEFTRMT) is set to FWD.

MAP display of SERVORD Add Option (ADO) command with defaults

```
SERVORD
SO:
>ADO
SONUMBER:  NOW YY MM DD
>$
DN_OR_LEN
>6215000
OPTION:
>DSCWID
SOBOPT:
>$
OPTION:
>$
COMMAND AS ENTERED:
ADO NOW YY MM DD 6215000  (DSCWID $) $
ENTER Y TO CONFORM, N TO REJECT, OR E TO EDIT
Y
```

The previous example assigns DSCWID to 621-5000 with the default characteristics of DSCWID type ADSITIME.

Base SCM Access (end)

MAP display of SERVORD Add Option (ADO) command with overrides

```
SERVORD
SO:
>ADO
SONUMBER:  NOW YY MM DD
>$
DN_OR_LEN
>6215000
OPTION:
>DSCWID
SUBOPT:
>DAMA
DAMA:
>CONF
SUBOPT:
>DEFTRMT
DEFTRMT:
>ANNC
SUBOPT:
>$
OPTION:
>$
COMMAND AS ENTERED:
ADO NOW YY MM DD 6215000 (DSCWID  (DTYPE ADSICID)
(DAMA NONE)  (DEFTRMT ANNC)$)$
ENTER Y TO CONFORM, N TO REJECT, OR E TO EDIT
Y
```

The previous example assigns DSCWID to 621-5000 with the characteristics of DSCWID type ADSICID. The AMA recording status is CONF and the default treatment is ANNC.

6 Subscriber Carrier Module-100 Access MVI-20

Understanding SMA translations

The following section is applicable to the multi-vendor interface (MVI) 20 variant of the Subscriber Carrier Module-100 Access (SMA). The SMA supports a maximum of 20 DS-1 links on its peripheral side (P-side), hence the name MVI-20. The term SMA, is used in this document to describe the digital interface between a Digital Multiplex System-100 (DMS-100) or DMS-100/200 digital switch and the remote digital terminal (RDT). Before datafilling the SMA MVI-20, it is necessary to have an understanding of SMA concepts and terminology. This chapter describes the product in general terms and provides specific signaling information required to understand SMA operation.

The Subscriber Carrier Module-100 Access

The SMA is a peripheral module (PM) based on the integrated services digital network (ISDN) line trunk controller (LTCI) architecture.

In this integrated configuration, the following benefits result: Multiple digital and analog conversions are eliminated, thereby improving transmission quality. Floor space and hardware requirements in the host office are decreased resulting in lower capital costs. In an integrated configuration back-to-back line circuits are avoided. So are voice-frequency appearances of subscriber lines in the main distribution frame (MDF), reducing equipment requirements for the MDF, line cards, and PMs for the DMS SuperNode network.

SMA system overview

This section provides an overview of the SMA system. The hardware components and software subsystems that make up the SMA system are shown in the following figure.

Figure 6-1 SMA system configuration

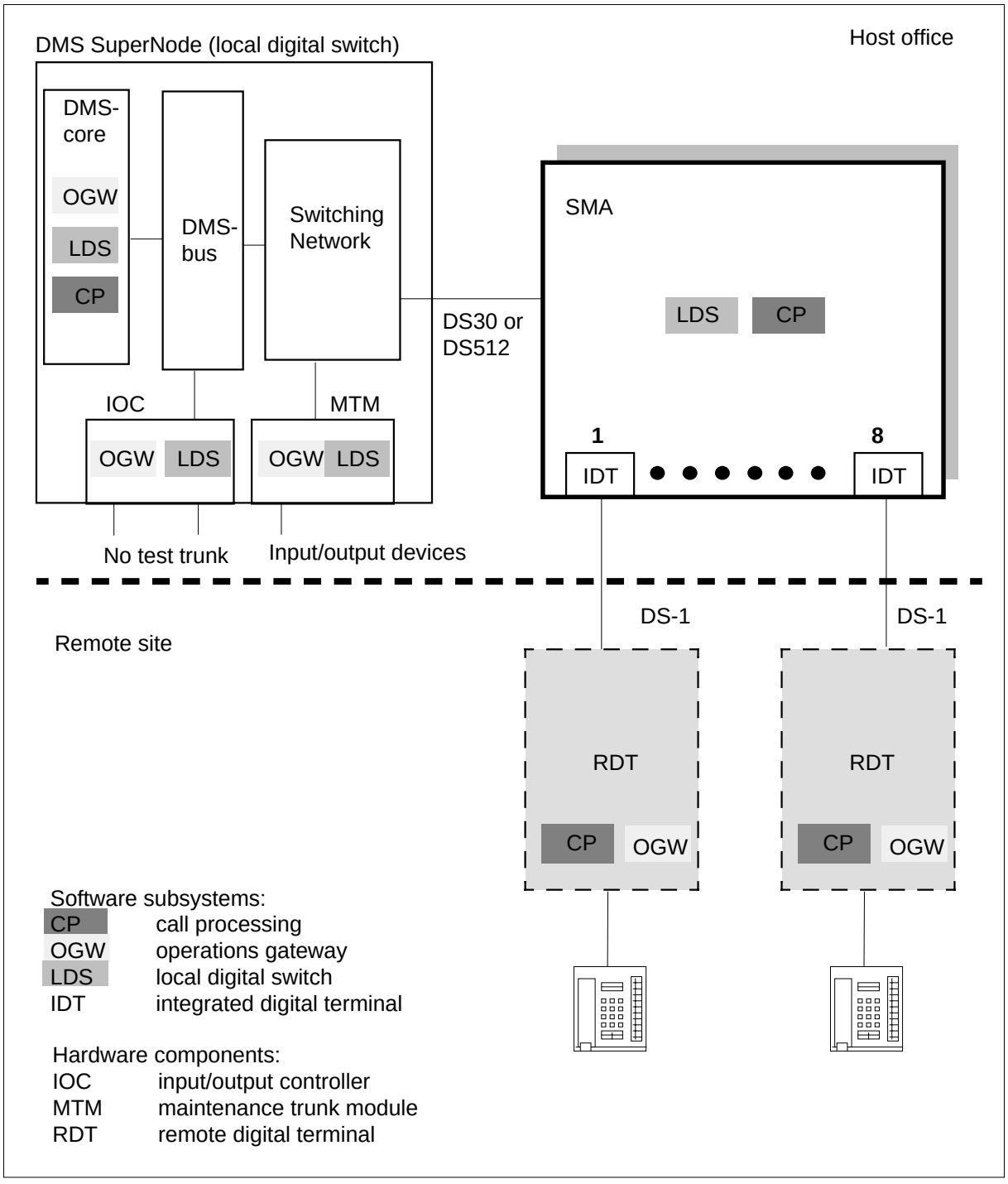

SMA system functionality

Introduction

This section addresses the following aspects of SMA system functionality:

- voice and data communications
- call setup, call take-down, and call monitoring messages
- operations, administration, maintenance, and provisioning (OAM&P) messages
- integrated services digital network (ISDN) Basic Rate Interface (BRI) signaling (functional only, stimulus signaling is not supported)
- Bellcore compliant Analog Display Services Interface (ADSI) tones and compatible voiceband data
- path protection switching
- communications protocols
- call processing
- service capabilities

Voice and data communications

Voice and data calls are transferred between the RDT and the Subscriber Carrier Module-100 Access (SMA) through DS-1 links using extended superframe format (ESF) signaling.

DS-1 frame format

The SMA and RDT exchange information over DS-1 links. DS-1 links operate at a rate of 1.544 Mbyte/s with a sampling frequency of 8000 frames each second.

The DS-1 frame consists of 24 8-bit bytes and a framing bit for a total of 193 bits for each frame. The 8-bit bytes fit into time slots or channels for a total of 24 channels in each frame. The framing bit precedes the 24 channels. These channels carry either speech information, signaling information, or operations information. The format of a DS-1 frame is shown in the following figure.

Figure 6-2 DS-1 frame format

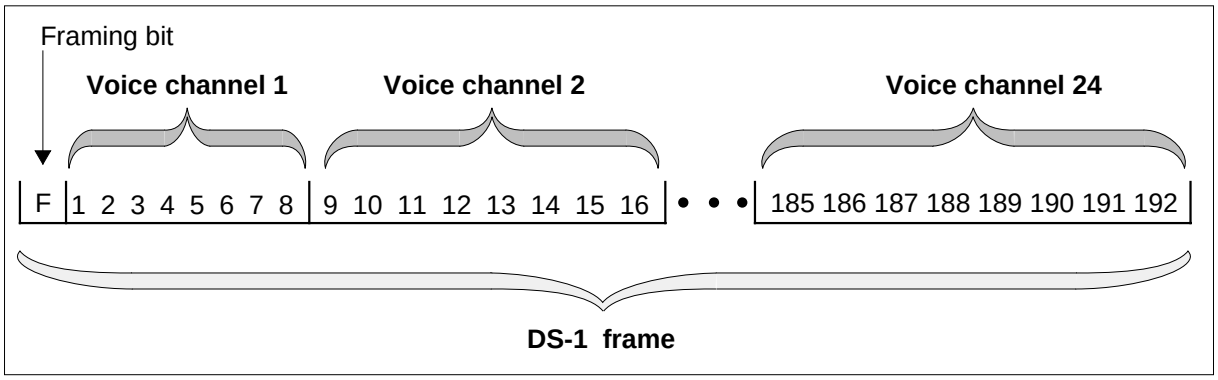

The framing bit identifies the location of the first time slot in the frame. When the RDT or SMA receives a framing bit, it is notified the following 8 bits contain information from time slot one. The framing bit is also used for frame alignment within the extended superframe alignment.

Extended superframe format signaling

Extended superframe format (ESF) signaling monitors DS-1 link performance and maintenance functions. ESF signaling improves robbed bit signaling messages by allowing messages to be represented by ABCD bits instead of AB bits, which is used in the superframe format.

The ESF consists of 24 DS-1 frames. In ESF, the framing bits, one for each 24-channel frame, form a 24-bit pattern. The 24-bit pattern is used to convey three types of information.

- frame pattern sequence (FPS)—The framing bit carries an FPS value of 001010. The FPS begins at the fourth frame and occurs every fourth frame thereafter using the framing bits. Together with the cyclic redundancy check (CRC), the FPS defines an in-frame condition.
- facility data link (FDL) performance (this capability is not used)—The FDL 4 is a Kb/s message. The FDL begins at the first frame and occurs every other frame thereafter using the framing bits. The SMA does not support facility protection and, therefore, does not use FDL messaging bits.
- cyclic redundancy check—The CRC begins at the second frame and occurs every fourth frame thereafter using the framing bits. In an extended superframe, a block check field is checked six times. The CRC-6 check detects bits emulating an FSP bit, and determines if an out-of-frame condition exists.

The format of a DS-1 ESF is shown in the following figure.

Figure 6-3 DS-1 ESF format

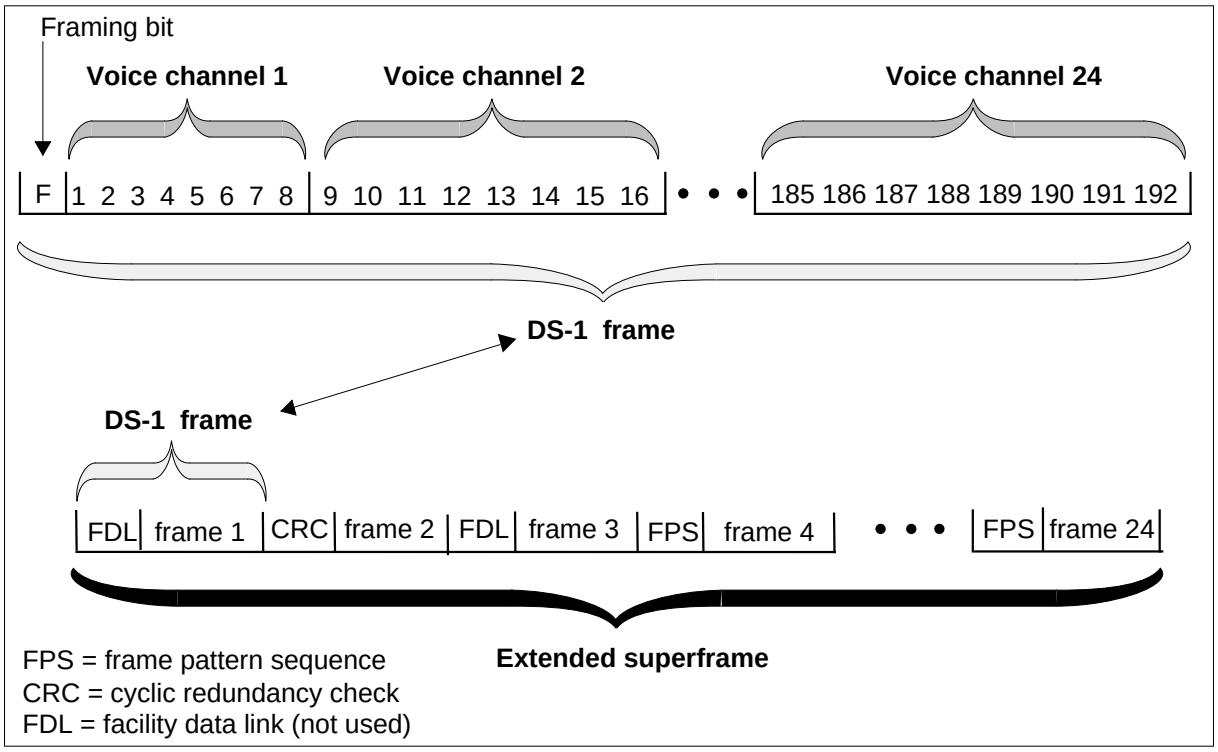

The following table details the superframe alignment pattern.

Figure 6-4 Superframe alignment pattern

Frame number	Framing bit type	Framing bit value
1	FDL	m
2	CRC	CB1
3	FDL	m
4	FPS	0
5	FDL	m
6	CRC	CB2
7	FDL	m
8	FPS	0
9	FDL	m
10	CRC	CB3
11	FDL	m
12	FPS	1
13	FDL	m
14	CRC	CB4
15	FDL	m
16	FPS	0
17	FDL	m
18	CRC	CB5
19	FDL	m
20	FPS	1
21	FDL	m
22	CRC	CB6
23	FDL	m
24	FPS	0

m = message bits
CB = check bits

Call setup, call take-down, and call monitoring

Call setup, call take-down, and call monitoring signals use TR-303 hybrid signaling, used by generic RDTs, which consists of

- robbed bit signaling (RBS)
- time-slot management channel (TMC) signaling

These two signaling types are discussed in the sections that follow.

TR-303 hybrid signaling

TR-303 hybrid signaling uses two types of signaling

- in-band signaling
- out-of-band signaling

TR-303 hybrid signaling is necessary to support integrated digital loop carrier (IDLC) call processing.

Robbed bit signaling

Robbed ABCD bit signaling, also called robbed bit signaling (RBS), is used for call supervision, ringing, and dial pulse (DP) digit transmission between the IDT and the RDT over the assigned time slot. ABCD bits are those bits extracted (or robbed, hence the term RBS) from the ESF least significant bits of each 8-bit channel in the 6th, 12th, 18th, and 24th frames. The combination of A, B, C, and D bits can define up to 16 unique codes in each direction, RDT to IDT and IDT to RDT. The following figure illustrates four ABCD bits extracted for time slot 1 of a DS-1 ESF. In-band (ABCD) signaling is on a channel-by-channel basis.

Figure 6-5 ABCD bits extracted from a DS-1 ESF

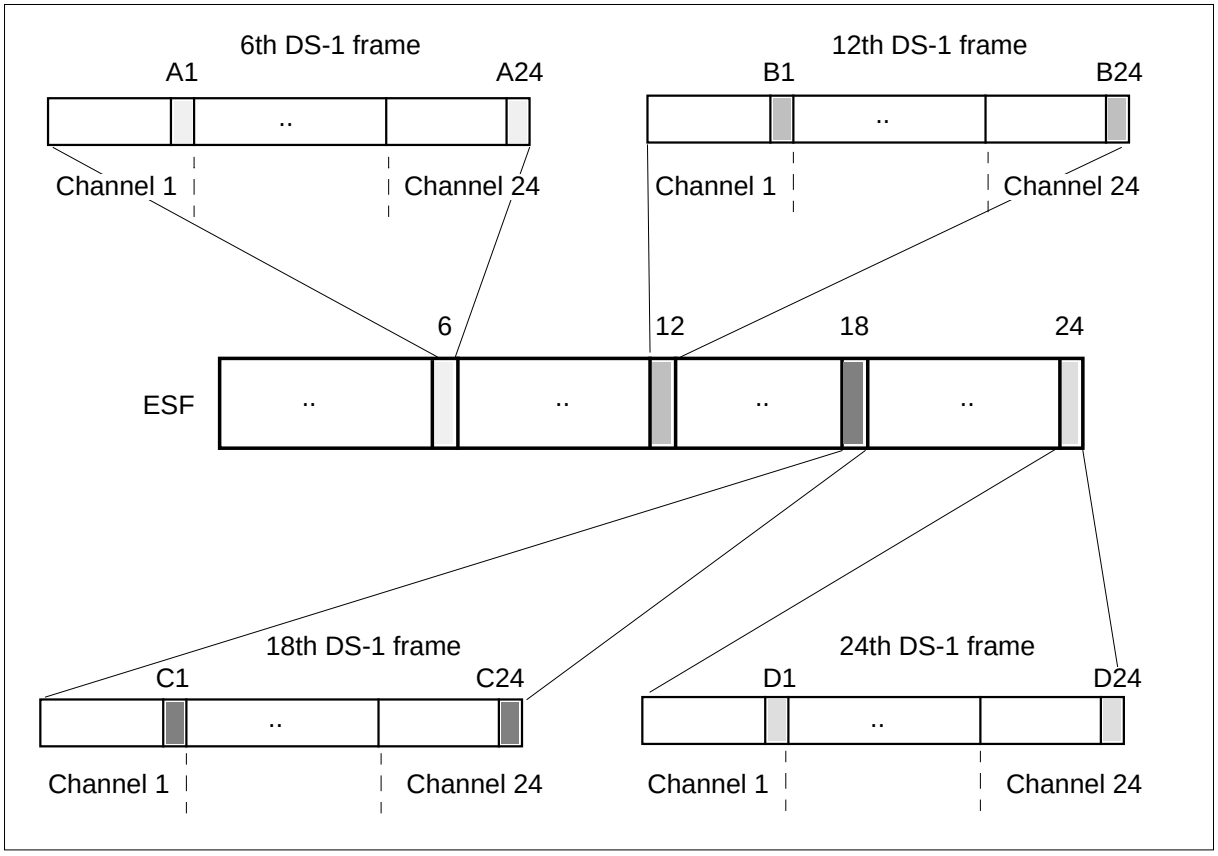

ABCD bits are used to exchange call supervisory information between the IDT and the RDT. The IDT uses TMC to set up a clear time slot connection at the RDT.

ABCD signaling provides the following functions:

- scanning for hook state changes

  Hook state changes are scanned and filtered appropriately in the signaling processor for answer, disconnect, or flash signals from customer lines.

- IDT ringing control to send ringing patterns to the RDT

  The IDT is responsible for ringing cadencing and scheduling and the RDT is responsible for physical ringing to customer lines.

- service to IDT call processing for loop signaling and supervision

  Provides the ability to send and receive ABCD codes for loop signaling and supervision.

- service to IDT coin call processing to perform coin control functions and tests for coin lines

  Coin control functions are coin collect and coin return. Coin tests are coin presence and coin partial presence.

- service to IDT call processing for automatic numbering identification (ANI) test for two-party lines

  this test is required to identify which party of a two-party line originates the call for billing purposes.

- dial pulse (DP) digit collection

  When DP digits are dialed, hook status transients are generated on the line. These hook transitions are detected and interpreted as whether or not a valid digit has been dialed.

- DP digit outpulsing

  DP digit outpulsing provides digit outpulsing to customer premises equipment.

Time-slot management channel signaling

Time-slot management channel (TMC) signaling, also known as out-of-band signaling, is a message-oriented signaling type used to signal the connection and disconnection of timeslots between the IDT and RDT, and ultimately set up and take down calls in an MVI RDT. These call processing signals

- are transmitted over channel 24 of a DS-1 link
- use Q.931 message protocol
- are path protected
- may contain up to 32 octets (an octet is one byte which contains eight bits)

The following figure shows signaling between an SMA and an RDT over a DS-1 link with the TMC channel transmitted over channel 24.

Figure 6-6 SMA to RDT connectivity

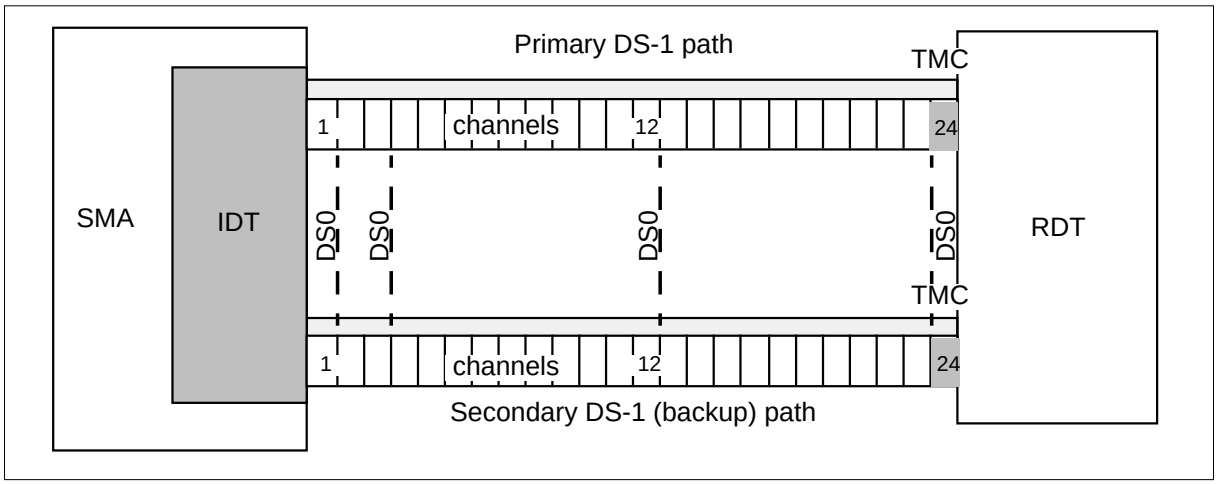

Operation, administration, maintenance, and provisioning (OAM&P)

Operations, administration, maintenance, and provisioning messages are transmitted for an SMA and a generic TR-303 over embedded operations channel (EOC) message channels. The EOC message signaling is described in this section.

EOC message signaling

The EOC is a message-oriented operations channel used to exchange OAM&P information between the RDT and the IDT. These operations messages

- are transmitted over channel 12 of a DS-1 link
- use EOC communication protocol
- use ASN.1 basic encoding rules
- are path protected

The SMA communicates EOC messages between the IDT and the RDT to

- initialize and maintain object-oriented static data at the RDT
- provide line test position (LTP) capabilities to the RDT
- permit the RDT to connect to external test systems

The RDT uses EOC messages to inform the SMA of its activities through logs and remote telemetry.

The following figure shows signaling between an SMA and an RDT over a DS-1 link with the EOC channel transmitted over channel 12.

Figure 6-7 SMA to RDT signaling over the EOC channel

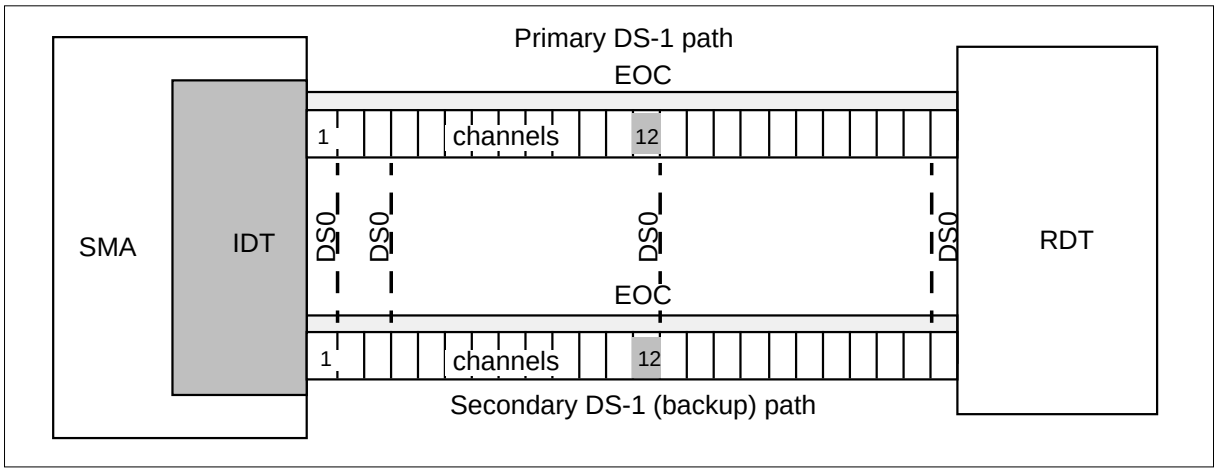

The following DMS applications use EOC message signaling:

- DMS line provisioning, which controls the datafill of subscriber services. Line provisioning refers to hardware provisioning and to service provisioning.
- DMS line maintenance and automatic line testing (ALT), which provides for the control and monitoring of subscriber line states from the MAP terminal and allows for diagnostic testing of the lines
- logs and alarms, which allow for the reporting of alarms and events to the DMS MAP terminal and operations support system that connects to the RDT
- node maintenance, which provides for the control of voice and data channels between the DMS CM and peripheral devices including the SMA and the RDT

ISDN BRI signaling

Integrated services digital network basic rate interface (ISDN BRI), commonly referred to as 2B+D, consists of two 64-kbit B-channels for voice and data and a 16-kbit D-channel for signaling and packet data. There are two types of ISDN BRI signaling: functional and stimulus.

Functional BRI signaling is supported by software built into the physical set of the functional BRI terminal. The Q.931 protocol is used, along with the signaling control protocol to send call control messages between the terminal and the network. Stimulus BRI signaling is not supported by the SMA

ISDN BRI consists of two B-channels for voice and packet data and a D-channel for signaling. The B-channels are dynamically assigned by means of TMC messages for voice and data use. The D-channel is nailed up at

provisioning time, meaning it is a permanently assigned network connection, and assignment of the D-channel is controlled by messages over the EOC.

National ISDN-2/3 BRI Phase I feature

The National ISDN-2/3 BRI Phase I feature increases the operational versatility of BRI line interface configurations and expands the BRI service options available to end users. The software optionality control (SOC) NI000050 in NA007 must be purchased to access the enhanced ISDN capabilities addressed in this section.

- Two B-channel access—This capability enables a terminal that supports voiceband information (VI) and circuit mode data (CMD) or VI or CMD to have access to both B-channels at the same time using a single terminal endpoint identifier (TEI). This capability applies to both fully initializing terminals (FIT) and non-initializing terminals (NIT). The number of B-channels a terminal can access is controlled through provisioning.
- Support for non-initializing terminals (NIT)—This capability supports one non-initializing terminal on a BRI interface that is provisioned with the default logical terminal. An NIT is a new class of BRI terminal does not initialize Layer 3 and therefore does not require a service profile identifier (SPID). An SPID is an identification number used by a terminal in the initialization process.
- Assignment of fixed feature keys to the default logical terminal for NITs—This capability permits the assignment of the following features to the NIT: call forwarding, message waiting, conference calling, call transfer, and call drop. The NIT can access these features using dial-access procedures or feature key management procedures.

The National ISDN-2/3 BRI Phase I feature introduces the following interactions:

- This feature changes the way additional call offering (ACO) operates for terminals that have the access privilege datafilled for two B-channel access. When the terminal has a call active and one B-channel free, and a termination takes place, the terminating SETUP contains the channel identifier information element (CID IE) encoded to the value of the free B-channel. For terminals without the two B-channel access privilege, this message would have the CID IE encoded to “no-channel".
- When flexible calling is active on a 2B FIT/NIT conference controller, all subsequent VI terminations are offered to the terminal with the CID IE encoded to “no channel".

Bellcore compliant ADSI tones and compatible voiceband data

The SMA generates alerting tones to support the Deluxe Spontaneous Call Waiting Identification (DSCWID) feature. When a line with the DSCWID

option has a call established and a second call attempts to terminate to that line, the SMA provides one of two types of alerting signals or tones

- a subscriber alerting signal (SAS)—The SAS is the tone the subscriber recognizes as the “call waiting tone".
- a SAS followed by a customer premises equipment (CPE) alerting signal (CAS)—The CAS alerts the CPE of forthcoming data. The SAS followed by a CAS is required to trigger an ADSI compatible CPE to display the DSCWID options. The CAS tone prepares the CPE to receive caller identification (CID) data.

An acknowledge (ACK) tone is generated by the DSCWID CPE indicating readiness to receive DSCWID data. If the CPE is ADSI compatible, it sends a DTMF A ACK signal in response to the CAS. If the CPE is a SCWID CPE, it sends a DTMF D ACK signal in response to the CAS. Once alerting tones are sent, the subscriber is allowed to control disposition to the incoming call by using the CPE softkeys if the CPE is ADSI, or hard-coded keys if the CPE is a SCWID or a 2500 set.

A T-tone timer sets the maximum amount of time allowed between sending a flash and the DTMF digit on an ADSI set. After the SMA receives a flash signal from the customer's ADSI compatible CPE, the SMA starts a T-tone timer. The value of T-tone is 600ms, during which the speech path is muted. The T-tone timer is used for the initial option of a DSCWID call, regardless of the CPE type. Any subsequent DSCWID options on an ADSI set use the T-tone timer.

Any subsequent DSCWID options on a SCWID or 2500 uses a new timer (T-flash). T-flash is used after a call is answered, with SCWID and 2500 sets, to provide the customer with ample time to select an option after a flash. This new timer is introduced because a subscriber does not have enough time to flash and then dial a DTMF digit within 600 ms. T-flash is a operating company controlled timer that is set from 1 to 8 seconds. The default value is 1.5 seconds. The SMA starts the T-flash timer if the NON-ADSI field is set to “Y", and the SMA receives a flash signal from the customer's SCWID or 2500 set during the held or conference call state. If the SMA cannot attach a UTR before 400 ms, the RETURN option is applied.

Note: For Bellcore TR-416 compliancy, the SMA must provide options if it detects a flash and is unable to attach a UTR. The SMA complies with this requirement by sending a flash to CC if it is unable to attach a UTR within 400 ms.

ADSI interactions

The following ADSI interactions apply:

- A warm SWACT during the downloading or transmitting of softkey data to the CPE prevents the data from being received at the CPE. Failure of the CPE to receive all of the data results in an unstable ADSI call.
- After a warm SWACT, a subsequent transmit to the CPE set causes the active ADSI session to drop.
- A busy return to service of the CMR circuit card, when an application session is active results in an unstable ADSI call.
- A busy of the CMR circuit card on the active unit of the XPM prevents CLASS services that use the CMR card circuit from functioning.

ADSI restriction

A successful ADSI session requires an ADSI compatible CPE. Only ten ADSI sessions can be active for each CMR circuit card.

ADSI hardware requirements

Hardware requirements to support ADSI capability include

- An NT6X78AB card is required for transmission of softkey and display information to the CPE.
- A NT6X69AD (Tone ROM) circuit card is required. The NT6X69AD circuit card must contain the ADSI tone as defined in TR-30.

Path protection switching

Path protection switching provides protection for the EOC and TMC message and signaling channels. The SMA supports one-for-one path protection switching for these messaging and signaling channels. Path protection switching controls the switching of activity from the active EOC and TMC to the backup EOC and TMC. Path protection switching provides end-to-end protection against failures of message processing hardware in both the SMA and the RDT.

Path protection switching can be initiated automatically or manually. Automatic path protection switching can be initiated by either the SMA or the RDT when a fault is detected. For maintenance purposes, path protection switching can be manually initiated through the integrated digital terminal (IDT) level of the MAP terminal.

The following concepts are used when referring to protection switching:

- path—a TMC or EOC message channel
- active path—the path or channel that is in the active state. The active path is carrying either TMC or EOC messages, and messages used for protection switching.
- standby path—the path in the standby state. The standby path carries only messages that enable it to become the active channel.
- protection switch—what occurs when the active path changes its state to standby, and the standby changes its state to the active path.

The following rules for protection switching apply

- The IDT or RDT must be capable of detecting a failure and initiating a protection switch.
- Once there has been a failure on a channel, and protection switching has occurred, there will not be a switch back to the original active or inactive configuration when the cause of the failure has been cleared.
- When possible, a standby path is kept in multiple-frame operation.

SMA to generic RDT path protection switching

For every IDT to RDT connection there is a dedicated TMC and EOC path on two links. Only one EOC and TMC messaging path can be active on the two links. The inactive EOC and TMC messaging paths are reserved for backup. It is possible to have an EOC message channel active on one link and the TMC message path active on the other link, or the EOC and TMC active on the same link.

Implementation of path protection switching is dependent on how the SMA is configured and how the associated tables are datafilled. The first link assignment in table RDTINV, field LINKTAB is the primary link that carries TMC and EOC messaging. Field RDTPPLNK is datafilled to define the secondary link that carries TMC and EOC messaging. The secondary link can be assigned as any value from 2-28 at the RDT.

The following figure illustrates TMC and EOC path protection.

Figure 6-8 DS-1 control channels

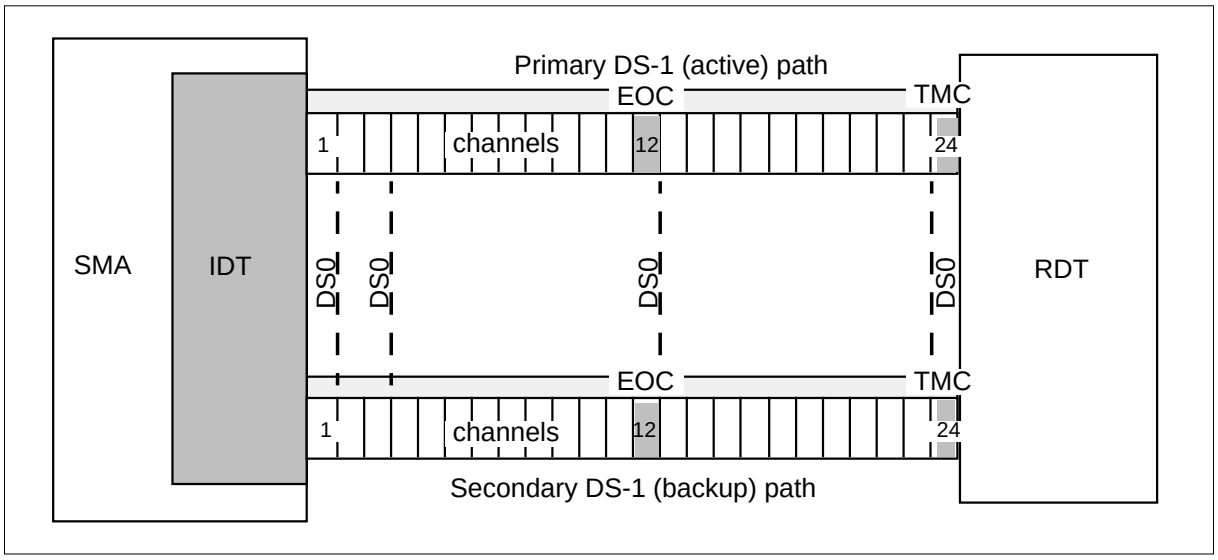

Manual path protection switching control

From the MAP terminal, operating company personnel can control path protection switching by

- initiating a protection switch for the EOC and the TMC channel
- initiating a forced protection switch for either the TMC or the EOC channel
- inhibiting a standby EOC or TMC path from becoming active
- enabling a standby EOC or TMC to become active, if necessary

Automatic path protection switching

The DS-1 links between the SMA and a generic RDT contain primary and secondary TMCs and EOCs. If an active TMC or EOC fails, there is an automatic switch to the protection channel.

A protection switch occurs on the TMC or EOC under the following conditions:

- failures detected from Q.921 protocol (such as failure to maintain multiple-frame operation (such as when the message frame retransmissions N200 LAPD counter is exceeded)
- switch message is received from the computing module through manual intervention
- switch message is received from the RDT

Manual and automatic protection switching restrictions

The following restrictions apply to manual and automatic protection switching:

- If you inhibit a path from becoming active and that path is currently active, you do not cause a protection switch.
- Once you inhibit a path, you cannot automatically or manually switch to it.
- Once you inhibit a path, you cannot initiate a forced switch to that path.

Communication protocols

The RDT communicates with the DMS SuperNode switch over DS-1 links that terminate on the SMA. To provide subscriber services from an RDT and to support communication between the SMA and the RDT, the following protocols are used

- Q.921 CCITT link access procedure on the D-channel (LAPD)
- Q.931 CCITT Digital Network Access
- EOC communication protocol
- DS30 protocol

Q.921 CCITT LAPD protocol

The Q.921 LAPD protocol

- establishes data link communications between an integrated digital terminal (IDT) and an RDT
- transmits information sent from a higher layer protocol
- receive information for delivery to a higher layer protocol

The Q.921 protocol is used for transmitting the following messages:

- time-slot management channel (TMC) messages for RDTs
- embedded operations channel (EOC) messages

The Q.921 protocol parameters are user-configurable through table RDTINV. If it is necessary to alter the LAPD parameters, the two parameters on both ends (RDT and DMS) must be changed together.

Table 6-1 Table RDTINV LAPD parameters

Parameter	Description
Maximum number of unacknowledged frames (K)	This is the maximum number of outstanding unacknowledged message frames permitted to be sent between the IDT and the RDT. This parameter adjusts the LAPD window size.
Maximum number of retransmissions (N200)	This is the maximum number of message frame retransmissions allowed.
Maximum number of octets in one frame (N201)	This is the maximum number of octets allowed in the information field of a message frame.
Maximum time to wait for acknowledgement for one frame (T200)	This is the maximum length of time in milliseconds (ms) a data link layer entity will wait for acknowledgement (time-out) of a transmitted message frame.
Period of inactivity on data link (T203)	This is the maximum time in seconds allowed without an exchange of message frames.

Q.931 CCITT protocol

The Q.931 protocol is used to communicate call setup, call take-down, and call monitoring information between the integrated digital terminal (IDT) on the SMA and the RDT. The SMA must translate the Q.931 generic-based signaling messages sent by the RDT into a message format the host can understand. The inverse is also true. The following figure illustrates signal flow from the RDT through the SMA.

Figure 6-9 Message channel routing in the SMA

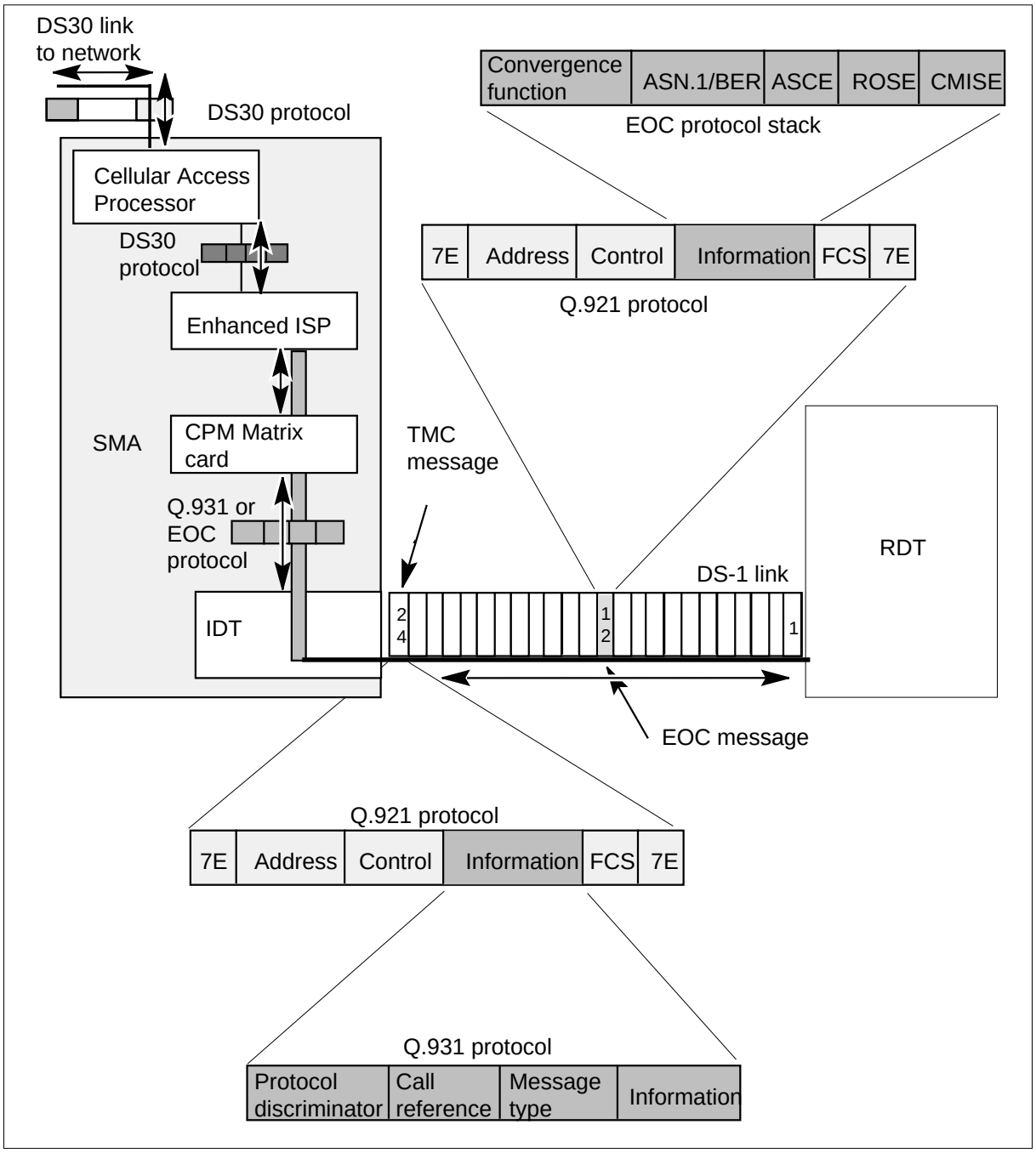

Q.931 protocol message structure

Q.931 protocol message composition is highly structured. Each message contains the following components in the order listed:

- protocol discriminator
- call reference
- message type
- information elements

For some messages, the information element is optional. The following figure illustrates Q.931 message structure.

Figure 6-10 Q.931 protocol message structure

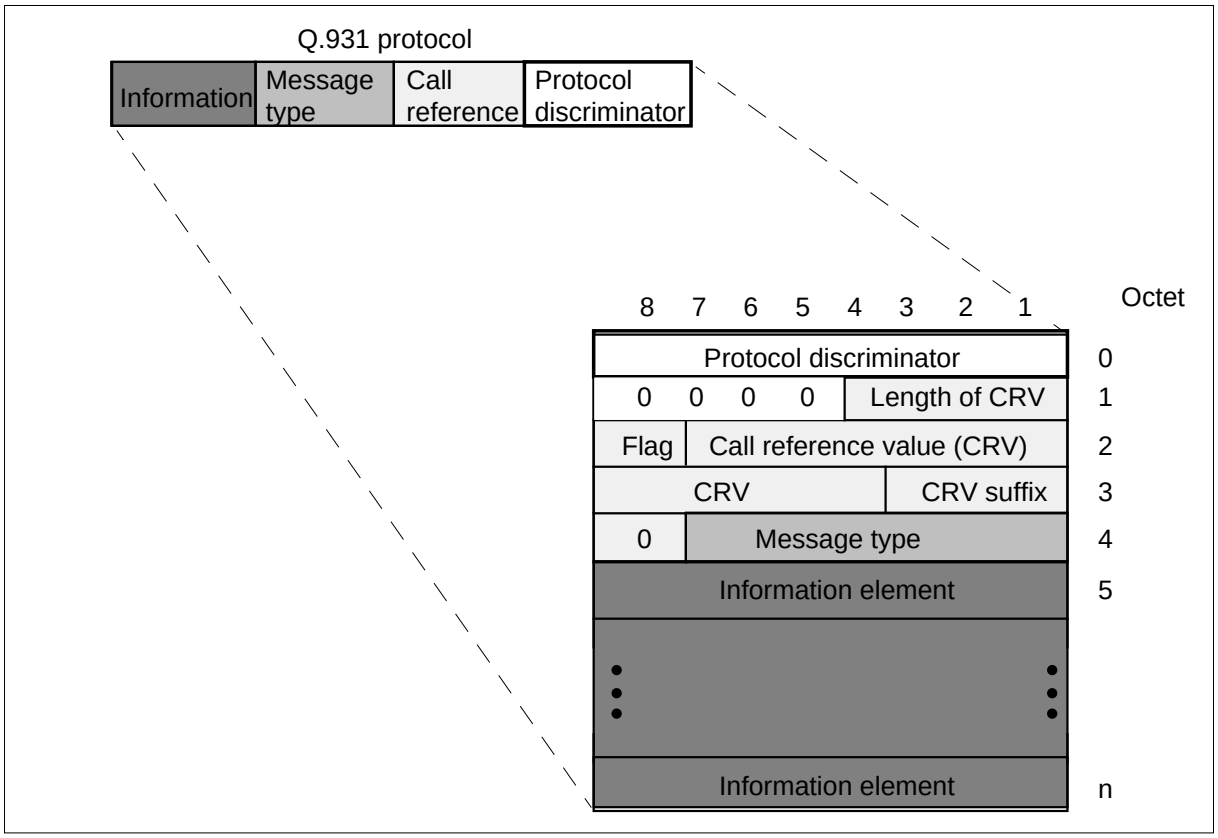

Protocol discriminator The protocol discriminator is the first part of any message. It is used to identify the type of message. The following bit sequence identifies a Q.931 protocol message: 01001111.

Call reference The call reference is the second part of any message. It is used to identify the line termination where the message applies. In the case of ISDN, it identifies the basic rate access (BRA) B-channel termination.

Call reference length value is fixed at 2 octets, thus allowing 4095 line terminations.

The call reference flag identifies the message originator. The message originator sets this flag to a value of 0. The destination side sets this flag to a value of 1.

The call reference value, bits 1 through 7 of octet 2 and bits 4 through 8 of octet 3, identifies the line termination.

The call reference suffix will be used to support ISDN BRA line terminations. A suffix of 000 indicates a line termination of only one channel; a suffix of 001 indicates a line termination associated with a B1 channel; and a suffix of 010 indicates a line termination associated with a B2 channel.

Message type The message type is the third part of any message. It is used to identify the type of Q.931 protocol message that follows. Each message has a unique bit assignment.

Messages for time slot assignment fall into two groups: messages for call establishment and messages for call take-down or disestablishment.

The Q.931 protocol message types are shown with their unique message type identifiers in the following table.

Table 6-2 Q.931 protocol message types and identifiers (Sheet 1 of 2)

Message type	Unique identifier	Bit sequence
Establishment message	Call proceeding	00000010
Disestablishment messages	Disconnect	01000101
	Release	01001101
	Release complete	01011010
Messages for signaling	Connect	00000111
	Information	01111011

Table 6-2 Q.931 protocol message types and identifiers (Sheet 2 of 2)

Message type	Unique identifier	Bit sequence
Messages for management	Status	01110101
	Status enquiry	01110101
Q.931 messages used by ISDN	Setup	00000101
	Connect	00000111
	Status	01110101
	Audit	
	Disconnect	01000101
	Release	01001101
	Release complete	01011010

Information element The information element is the final, and sometimes optional, part of a Q.931 message.

Each information element is highly structured. However, each information element structure is unique. The only structural element that each information element has in common is the information element identifier.

The names and functions of Q.931 message information elements are listed in the following table.

Table 6-3 Q.931 message information element names and functions (Sheet 1 of 2)

Message element name	Function
Bearer capability	Indicates information transfer capability, mode, and rate
Call state	Indicates the following RDT or IDT call states: • null • call initiated • call present • connect request • call active • disconnect indication • release request • permanent signal

Table 6-3 Q.931 message information element names and functions (Sheet 2 of 2)

Message element name	Function
Cause	Indicates reason for certain messages and provides diagnostic information
Channel identification	Identifies a time slot within the interface controlled by the Q.931 message

Q.931 message descriptions

A description of each of the Q.931 messages is listed in the following table. Included is a list of the information elements that each message contains.

Table 6-4 Q.931 message descriptions (Sheet 1 of 2)

Q.931 message	Description	Information element
Call proceeding	This message is sent from the IDT to the RDT in response to a setup message for a loop reverse battery signaling call.	This message contains the channel identification information element.
Connect	This message is sent by the RDT to the IDT to indicate a time slot has been connected and that a call has been answered by the terminating party. It is also sent by the IDT to the RDT at the conclusion of digit collection to indicate a complete network address has been received. This message is also sent by the RDT in response to a setup message with an alerting OFF pattern in the signal element.	This is done for ISDN, in which case the message contains the channel identification information element.
Disconnect	This message is sent by the IDT to the RDT when it determines the call must be cleared. It is sent by the RDT to the IDT to report the subscriber has gone on-hook.	This message contains the cause information element.
Information	This message is sent by either the RDT or the IDT to indicate signaling information, addressing information, and/or feature activation.	This message contains information elements: keypad facility, switch hook, and signal.
Release Release complete	These messages are sent by either the RDT or the IDT to indicate the equipment sending the message has disconnected the time slot and intends to release all resources associated with the call. The equipment receiving the message should release the time switch connection and all resources associated with the call.	These messages contain the cause information element.

Table 6-4 Q.931 message descriptions (Sheet 2 of 2)

Q.931 message	Description	Information element
Setup	This message is sent from either the RDT or the IDT to initiate the start of a call. From the IDT, this message contains the channel identification, keypad facility, and signal information elements.	From the RDT, this message contains only the bearer capability information element.
Status	This message is sent from either the IDT or the RDT at any time during the call, when an unexpected message is received or reports other conditions of the call.	This message contains the cause and call state information elements.
Status enquiry	This message is sent from either the IDT or the RDT at any time to solicit a status message from the receiver.	This message contains no information elements.

EOC communication protocol

The RDT and the SMA communicate using the EOC communications channel. This communication occurs over a dedicated DS-0 using the Q.921 LAPD protocol used on ISDN D-channels. Operations messages are transmitted between the DMS SuperNode switch and the RDT. The EOC communications channel uses the operations gateway (OGW) software to provides the protocol translation and routing capabilities needed to connect RDTs to operations entities. The OGW consists of the following three elements:

- EOC protocol stack—provides the communications function
- applications router—provides the communications function
- operation entities—are the users of this communication function

These elements are shown in the following figure and discussed in the text that follows.

Figure 6-11 OGW software functional elements

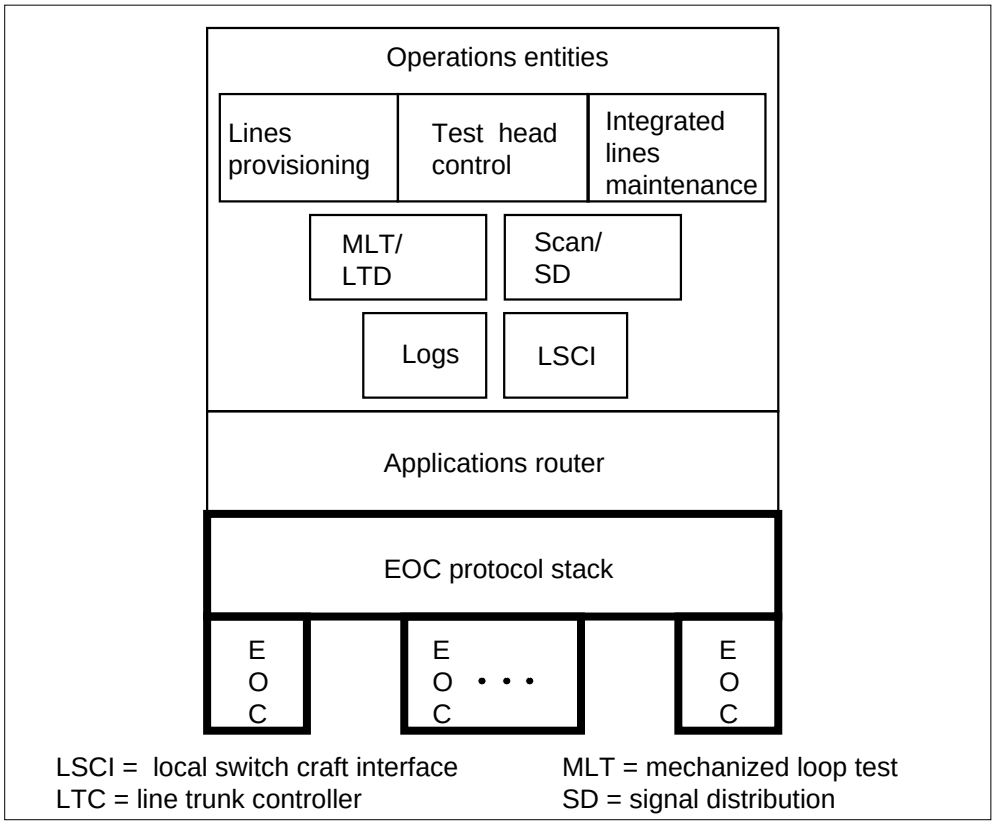

The EOC communication protocol consists of the following four functional areas:

- physical layer, which is the physical DS-0 channel on the first DS-1 link between the local digital switch (LDS) and the RDT
- data link layer, which uses LAPD protocol for processing between the LDS and the RDT
- EOC protocol stack, which is a 3-layer communications protocol stack used to communicate OAM&P information between the IDT and the SMA, and is described later in this section
- path protection switching, which handles redundant messaging paths and the mechanism of switching activity between them

These four functional areas perform common management information service element (CMISE) message transfers between the LDS software and the RDT. The following figure illustrates the relationship of these EOC communication protocol functional areas.

Figure 6-12 EOC communication protocol functional areas

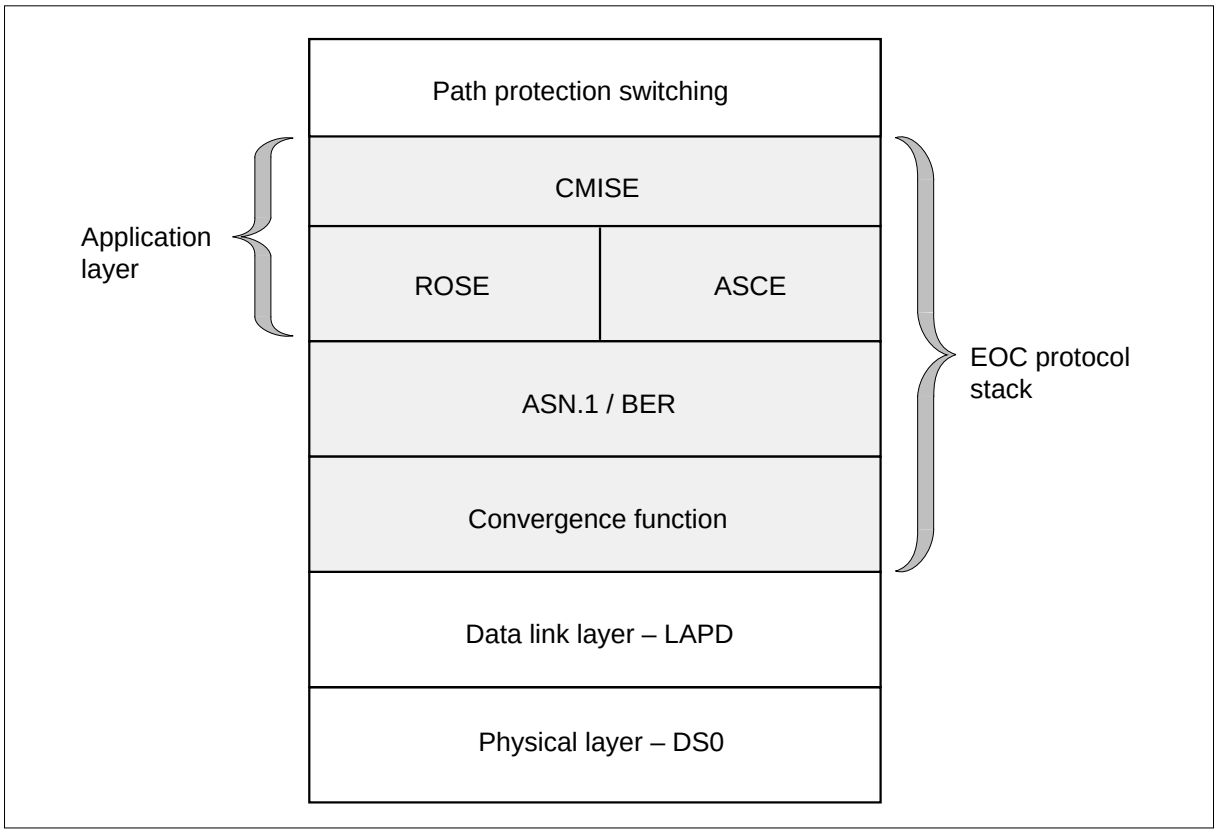

The encoding and decoding of line test EOC messages occur in the SMA. Encoding and decoding in the SMA instead of the computing module (CM) improves real time performance for line testing. Encoding and decoding of line test EOC messages is performed for the following:

- metallic test access unit
- test response circuit
- metallic test access path termination
- analog line termination

EOC protocol stack

The EOC protocol stack is a 3-layer communications protocol stack used to communicate operations, administration, maintenance, and provisioning information between the IDT and the SMA and the RDT over the EOC communications channel. The EOC protocol stack, as shown in the figure titled “EOC communication protocol functional areas" consists of the following three layers:

- convergence function layer—performs the segmentation and re-assembly of application protocol data units (APDU). The convergence function

layer performs the mapping between the services of the application and data link layers.

- application layer—consists of the following functionalities to allow two application processes to communicate:
  - — common management information services (CMISE), which exchanges information and commands to manage the SMA system
  - — remote operations service element (ROSE), which supports communication between communicating application users
  - — association control services element (ASCE), which controls application associations
- abstract syntax notation one (ASN.1) layer—uses basic encoding rules (BER), parses and formats messages from functional subcomponents

Applications router

The application router provides the internal connection between the operations entities and the EOC protocol stack.

Operations entities

Operations entities are DMS SuperNode applications or external devices that are the source or end point of operations messages between the SMA and the RDT. These entities use the services of the EOC protocol stack to communicate over the EOC with the RDT.

The IDT software allows operations entities to perform OAM&P tasks by sending messages over the EOC. The following applications are external to IDT software yet communicate with IDT software:

- line provisioning, which controls the datafill of subscriber services
- line maintenance, which enables controlling and monitoring subscriber line states from the MAP terminal, and permits diagnostic testing of the lines
- logs and alarms, which allow alarms and events to be reported at the MAP terminal and external operating systems
- node maintenance, which provides for the control of voice and data channels between the CM and the SMA and RDT.

The IDT software communicates with an RDT over an LAPD channel.

DS30 protocol

DS30 protocol is a half-duplex protocol used on DS30 or DS512 links and includes a message checksum for error detection.

DS30 protocol is a form of handshaking protocol. Handshaking protocol is used for message transfer between nodes. This message transfer enable the nodes to inform each other of their present condition with respect to messaging. The next figure illustrates a general form of handshaking protocol.

Figure 6-13 Handshaking protocol

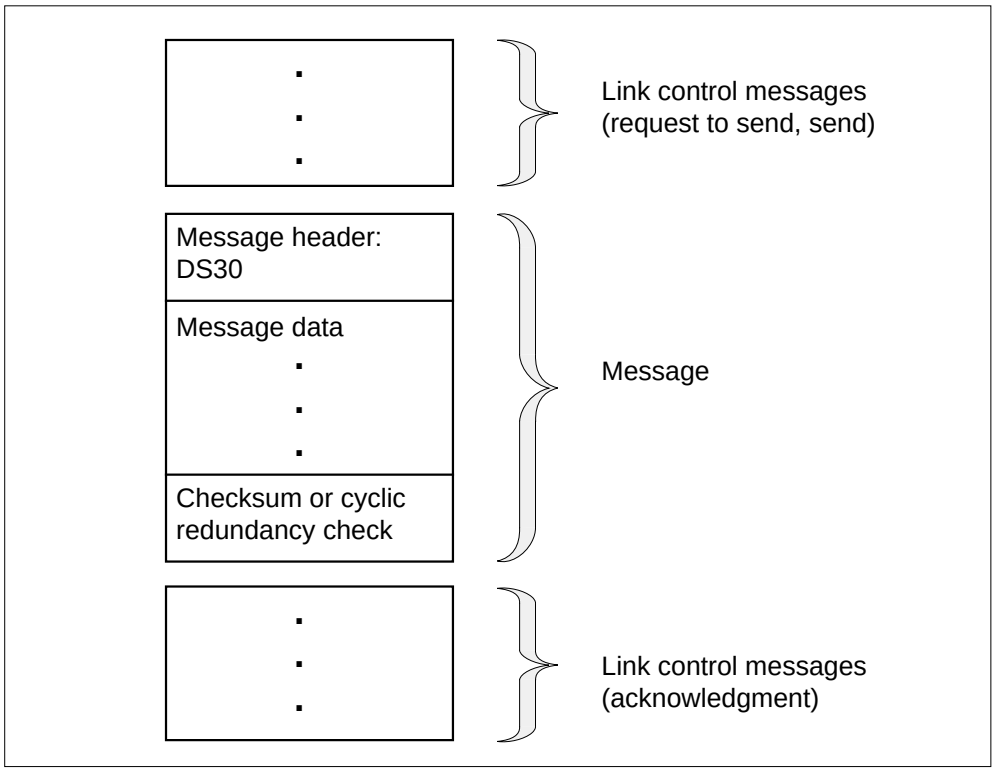

Message error detection is performed by message time-out and by message checksum or CRC calculation. In the event of protocol, checksum, or CRC failure on an outgoing message, the sending node retries the send sequence.

On an incoming message failure, the sending node reroutes the message over an alternate control side (C-side) link. Hardware redundancies provide at least one alternative path to and from a node.

The DS30 message is transmitted over a link, with link control messages preceding and following it. From a software point of view, messaging occurs between programs executing in the SMA and programs executing in the CM. Many software tasks or processes communicate among themselves by way of messages over the DS30 links.

The format of DS30 messages is shown in the next figure.

Figure 6-14 DS30 message format

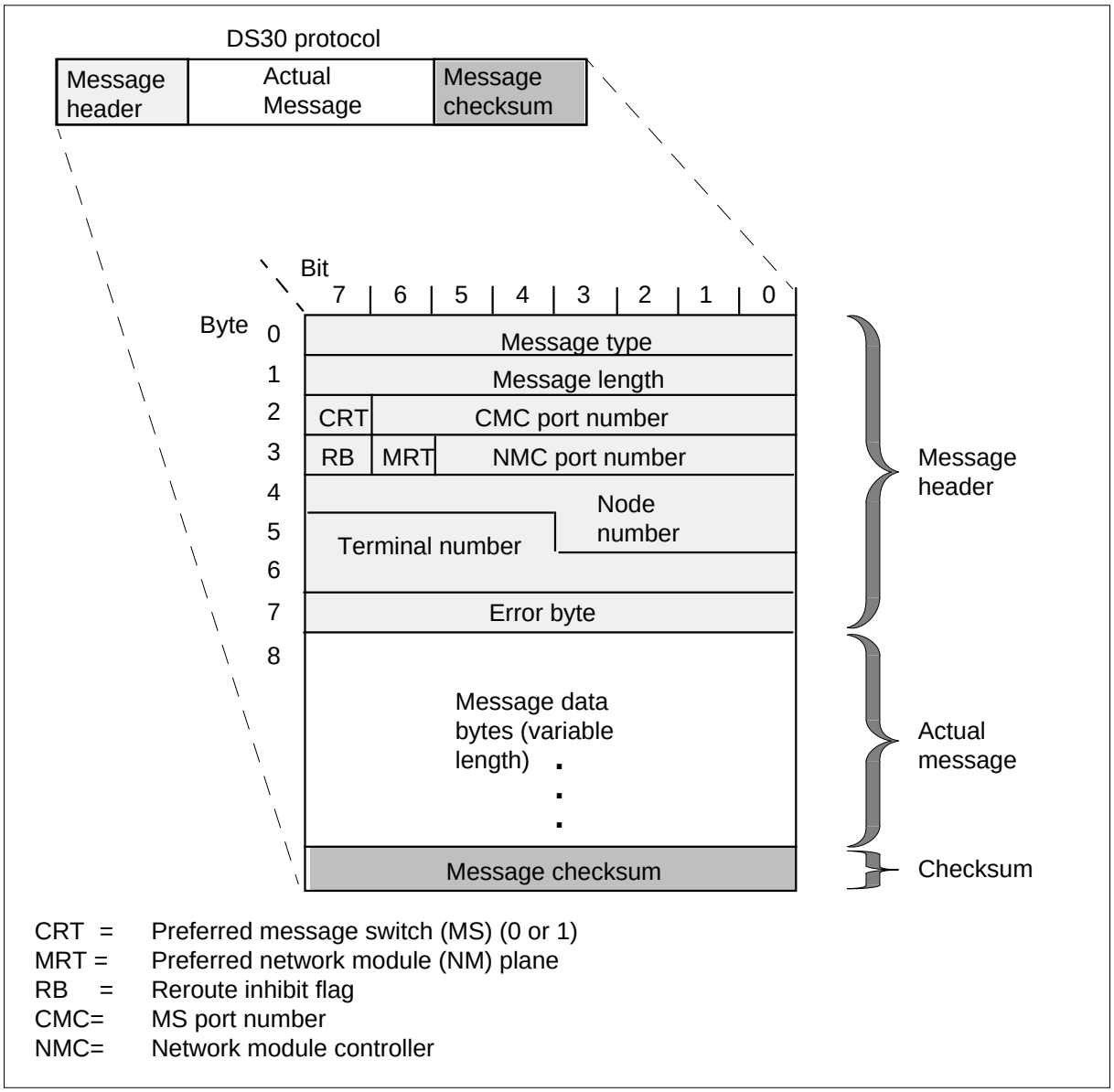

The DS30 message header is the first eight bytes as follows:

- The first byte specifies the message type
  - — control, which is one byte long
  - — start of message (SOM), for data
- The second byte specifies the total number of bytes in the message.

- The next two bytes specify the route, and contain the following fields

  — CRT, which specifies the preferred message switch (0 or 1)

  — MRT, which specifies the preferred network plane

  The CRT and MRT fields are used for incoming messages and are set to zero for outgoing messages.

- The next three bytes contain the terminal identifier (TID), which identifies the destination node and terminal number for outgoing messages, and also identifies the origination node and terminal number for incoming messages.
- The last byte is the message checksum byte field, which contains a checksum over all bytes in the message. The last byte is used to detect transmission errors.

The number of bytes in the actual message or data is variable.

ADSI protocol

Analog Display Services Interface (ADSI) permits application software to download softkey information to customer premise equipment (CPE). The ADSI provides bi-directional communication between the DMS SuperNode switch and a CPE. To support these capabilities, ADSI protocol is required. The ADSI protocol uses standard dual-tone multifrequency (DTMF) signaling and standard modem based technology, for transmission of caller_id information from a DMS SuperNode switch to a CPE.

The SMAs role in ADSI protocol is to act as a message transfer agent between CM and the CMR circuit card. The combination of the SMA and CMR act as an interface between CM application software and an ADSI compatible CPE. Any message sent to the SMA to support ADSI is forwarded to the CMR. The CMR forwards the correct information to the CPE. The features that use the ADSI protocol are:

- Visual Screen List Editing (VSLE)
- Call Logging
- Deluxe Spontaneous Call Waiting Identification (DSCWID)

To support the ADSI protocol the DMS SuperNode switch supports the following interfaces:

- the off-hook interface and protocol as defined in TR-NWT-000030 (TR-30)
- the ADSI interface and protocol as defined in TR-NWT-001273 (TR-1273)

TR-1273 divides the ADSI protocol into three layers. The layers are the physical, data link, and message layers.

Physical layer

The physical layer is responsible for the transmission of the bit streams between the DMS switch and the CPE. The DMS Supernode switch must be able to generate a voice band CPE alerting signal, and be able to receive standard DTMF signals from the ADSI CPE.

Data link layer

The data link layer provides data transmission between a DMS SuperNode switch and the CPE. This layer also checks for error detection and correction.

Message layer

The message layer controls the character set and data codes when data is displayed on the CPE.

Call processing

The SMA system is able to performing call processing through Q.921, Q.931, and DS30 protocols and TR-303 hybrid signaling.

Call processing can originate from the RDT or from distant users whose calls terminate on an RDT subtending from the SMA. In both cases, the SMA provides the translation between the Q.931 generic-based messages of the RDT and the DS30 message format the host understands.

Call processing (RDT to IDT)

The call processing description that follows traces the call from the RDT to the DMS SuperNode switch through the IDT. The description is based on POTS/COIN calls. ISDN calls may vary.

Time slot request

When the originating subscriber goes off-hook, it causes a loop closure. Current flows in the loop, exceeding a set threshold. The RDT line card detects this current. Coin calls made from coin first equipment have loop closure only after a coin has been deposited.

Using the TMC message channel, the RDT sends a setup message to the IDT. The call state is call-initiated. This message contains the call reference and bearer capability associated with the subscriber line that has gone off-hook.

After sending the setup message, the RDT sets a timer and waits for a setup acknowledge or a release-complete message from the the IDT. If there is no response within the specified time lapse, the setup message is retransmitted. If there is still no response, the RDT sets a delay timer and continues to retransmit setups until the IDT responds or the subscriber goes on-hook.

Channel selection

The IDT reserves an available channel for the call and sends this information back to the RDT in the setup acknowledge message.

As the setup acknowledge message is sent, the IDT connects the call to the allocated channel. When the RDT receives the setup acknowledge message, the allocated channel is connected to the line termination of the originating call.

Once the connection is established, the IDT sends dial tone over the connected channel. The call is now in an overlap sending state.

If there are no available channels, the IDT sends a release complete message to the RDT with the reason specified in the cause information element, then returns the call to a null state.

Sending addressing information Digits are collected in one of two ways, depending on whether the subscriber loop uses dial pulse or dual-tone multifrequency dialing (DTMF).

- If the RDT receives dial pulse input, the RDT sends an information message to the IDT with this address information, using keypad facility information elements
- If the RDT receives DTMF input, this information is sent to the IDT in-band, where it is interpreted by the universal tone receiver.

The addressing information is then forwarded to the computing module (CM) in the DMS SuperNode switch.

Tone generation

After the CM receives the addressing information and determines the address is a valid number, the CM tries to set up a channel for the call through the network. When the CM has set up a channel through the network, the IDT sends a connect message to the RDT. The call is now in an active state.

If the CM determines the addressing information is from a toll or coin line, the IDT sends a notify message to the RDT. The notification indication information element is encoded as reverse battery to indicate toll diversion. When the RDT receives this message, it sends reverse battery on the subscriber line.

If the CM determines the addressing information is invalid, or is unable to establish a connection through the network, the channel remains open to allow the DMS SuperNode switch to provide in-band call progress information, such as reorder tone, to the subscriber.

The message and tones card in the SMA generates dial tone. The time switch card switches the tone under directions from the enhanced ISDN signaling pre-processor (EISP) card onto the correct DS-1 channel. If the called line is busy, the message and tones card generates a busy tone, and this tone is sent to the originating party. Originating subscribers can receive other treatments, such as reorder tone and announcements, depending on conditions present at the time the call is placed.

Call disconnection

The IDT and RDT continually monitor the call for new messages. In a system where flash is disabled, if either end goes on-hook without flash detection for 250 ms or more, a disconnect message is sent to the far end as an invitation to release the time slot and call reference. With flash enabled, the on-hook signaling bit pattern must persist for 1200 ms or more for the IDT or RDT to send a disconnect message. Simultaneously, a timer is set at the disconnect-message end. If the IDT began call clearing, the call is now in a disconnect indication state. If the clearing began at the RDT, the state is now disconnect request.

In response to this message, the far end sends a release message indicating the time slot and call reference have been released. A timer is set at release-message end. When the release message is received, the disconnect-message end timer is cancelled and a release complete message is sent to the other end, indicating both the time slot and the call reference are released for future use.

If a release message is not received before the disconnect-message end timer expires, the end that sent the disconnect message sends a release message and sets a timer. If a release complete message is not received before this new timer release-message end expires, a second release is sent and the timer restarted. If there is no response to the second release, the call reference and time slot are released.

Flash detection

If flash is enabled and an off-hook subscriber goes on-hook for less than 250 ms, followed by off-hook, it is treated as a glitch and the call connection remains. However, if the subscriber goes on-hook for 250 ms or 360 ms and then goes off-hook before 1200 ms expire, 1200 ms from the time the subscriber first goes on-hook the system will treat the sequence as a flash.

A flash is detected on lines using dial pulse and DTMF at the RDT and encoded into an information message using the keypad facility information element. The information message is sent to the IDT and processed while the call remains in an active state.

If the caller has subscribed to call transfer or to three-way calling, the RDT sends the same information message when a flash is detected. However, the

call is placed in an overlap sending state to allow for additional digit collection. The message exchange for setting up the second call is the same as for setting up a simple end-to-end call. After the second party is reached and the IDT receives a second flash information message, the call is transferred or bridged.

A flash may also be detected in the overlap sending state when a subscriber activates features, which do not require a call to be established, such as call forward.

Busy service of subscriber lines

The CM can direct the SMA to busy a subscriber line. This action prevents call processing on the subscriber line and is usually executed during maintenance, for example, when a MAP command is entered from the LTP level to test a line.

Call processing (IDT to RDT)

The call processing description that follows traces the call from the DMS SuperNode switch through the IDT to the RDT. The description is based on POTS/COIN calls. ISDN calls may vary.

Time slot request

Using the TMC message channel, the IDT sends a setup message to the RDT. The call is in a call present state. The setup message contains the call reference and bearer capability associated with the subscriber line that originated the call, channel identification, and may include the signal information element.

After sending the setup message, the IDT sets a timer and waits for a call proceeding, alerting, or releasing a complete message from the the RDT. If there is no response within the specified time lapse, the setup message is retransmitted. If there is still no response, the IDT releases the call reference and channel, sends a release complete message to the RDT with the reason specified in the cause information element, and returns the call to a null state.

Network busy call treatment

If the network is busy, the message and tone card in the SMA generates a reorder tone to the originating party.

Channel selection

In the setup message, the IDT indicates the channel to be used for call connection using the channel identification information element. If the channel is not available, the RDT sends a release complete message back to the IDT.

If the channel is available, the RDT replies with an alerting message or connect message that contains a channel indication information element. The channel indication information element confirms the channel reserved by the IDT for the call.

If the called line is busy, the message and tone card in the SMA generates a busy tone. This tone is sent to the originating party.

Alerting

If the setup message received at the RDT was sent with alerting information encoded into the signal information element, the alerting message is sent back to the IDT. An alerting message indicates the called party is being alerted. The call is in the call received state. While a called line is ringing, the originator receives a ringback tone.

The SMA only supports the single-party alert cadence. Ringing capabilities include single-party 20 Hz ringing and distinctive ringing for Meridian Digital Centrex (MDC).

The following table identifies the SMA-supported ringing cadences.

Table 6-5 SMA-supported ringing cadences

	Ringing cadences (in seconds)					
Ring types	**On**	**Off**	**On**	**Off**	**On**	**Off**
single party	2	4				
distinctive 1	1.5	4.5				
distinctive 2	1.5	.5	1.5	1.5		
distinctive 3	1.5	.5	.5	3.5		
distinctive 4	1.5	.5	.5	.5	.5	2.5
distinctive 5	1.5	.5	.5	.5	1.0	2.0
distinctive 6	1.0	.5	1.0	3.5		
distinctive 7	.5	.5	.5	.5	1.0	3.0
distinctive 8	.5	.5	1.0	.5	.5	3.0

When the called subscriber goes off-hook, the RDT detects the change in the line current and sends a connect message to the IDT, which trips the ringing. The call is now in a call active state.

On-hook transmission

On-hook transmission allows the network to transmit information such as calling number delivery (CND) to the called subscriber. Calling number delivery is an example of an on-hook transmission service that is coincident with a terminating call. Other on-hook transmission services, such as message delivery, are not coincident with call terminations.

Custom local area signaling service (CLASS) calling number delivery (CND) If a setup message was received, the RDT responds with an alerting message. The call is in the call received state. The calling number is delivered during the first silent ring cycle.

When the called subscriber goes off-hook, the RDT detects the change in the line current and sends a connect message to the IDT which trips the ringing. The call is now in a call active state.

Loss padding

Padding or attenuation of pulse code modulation (PCM) samples take place in the ring/pad card and are introduced to compensate for expected signal loss through the network. The CM directs the SMA to apply padding to specific lines. The ring/pad card in the SMA provides the padding and the enhanced time switch circuit card under NTAX74AA cellular access processor (CAP) circuit card direction, and introduces the padding onto appropriate channels.

Call disconnection

The IDT and RDT continually monitor the call for new messages. If flash is disabled, should either end go on-hook for 250 ms or more, a disconnect message is sent to the far end as an invitation to release the time slot and call reference.

With flash enabled, the on-hook signaling bit pattern must persist for 1200 ms or more for the IDT or RDT to send a disconnect message. Simultaneously, a timer is set at the disconnect-message end. If the IDT began call clearing, the call is now in a disconnect indication state. If the clearing began at the RDT, the state is now a disconnect request.

In response to this message, the far end sends a release message indicating the time slot and call reference have been released. A timer is set at the release-message end. When the release message is received, the disconnect-message end timer is cancelled, and a release complete message is sent to the other end, indicating both the time slot and the call reference are released for future use.

If a release message is not received before the disconnect-message end timer expires, the end that sent the disconnect message sends a release message and sets a timer. If a release complete message is not received before this new timer release-message end expires, a second release is sent and the timer restarted. If there is no response to the second release, the call reference and time slot are released.

Flash detection

If flash is enabled and an off-hook subscriber goes on-hook for less than 250 ms followed by off-hook, it is treated as a glitch, and the call connection remains. However, if the subscriber goes on-hook for 360 ms or more and then

goes off-hook before 1200 ms expire 1200 ms from the time the subscriber first goes on-hook, the system treats the sequence as a flash.

A flash is detected on lines using dial pulse and DTMF and processed by the IDT while the call remains in an active state.

If the caller has subscribed to call transfer or to three-way calling, the call is placed in an overlap sending state to allow for additional digit collection. The message exchange for setting up the second call is the same as for setting up a simple end-to-end call. After the second party is reached, and the IDT receives a second flash, the call is transferred or bridged.

Busy service of subscriber lines

The CM can direct the SMA to have an RDT busy a subscriber line. This action prevents call processing on the subscriber line and is usually executed during maintenance, for example, when a MAP command is entered from the LTP level to test a line.

Call processing coin operation

Coin commands

The following commands are used:

- coin collect
- coin return
- coin presence
- coin partial presence (used in local coin overtime)

Coin collect This command directs a coin first (CCF) or coin dial tone first (CDF) phone to collect money deposited for a phone call. When coins are first deposited, they go to the hopper, a temporary holding location where money is stored before coin collect or coin return. When the coin collect command is received, the coins drop from the hopper into the coin vault.

On coin phones requiring a flat rate, the coins are collected when the call is completed. On coin phones that connect to a switching system that supports local coin overtime (LCO), the coins are collected every few minutes.

Coin return After money is deposited, a coin return command directs the coin phone to return the deposited money when the calling party on a coin phone hangs up before the terminating party answers.

When channel reassignment occurs and the call cannot be reassigned, the call is dropped for a higher priority call. Or, if a call cannot be connected because all channels are busy, a coin return message is sent.

Coin presence This command directs CDF phones to check for an initial deposit or stuck coins. It is also used for CCF phones to check for stuck coins.

An operator processes long distance calls on CCF and CDF phones by monitoring tones generated by the phone station, according to coins deposited.

Coin partial presence This command is used with CCF and CDF phones when supporting LCO. The coin partial presence test checks for coins deposited after the initial deposit.

Battery commands

In addition to the coin commands, the CM can send or instruct the RDT to send reverse battery and normal battery.

Reverse battery This command, used by all types of coin phones, prevents communication between the calling and called parties. It is also used to

- reset the phone totalizer, an electromechanical device that totals initial rate deposits
- prepare a phone station for calling
- signal coin denominations to the operator

Normal battery This command allows the talking state. It is also used on some CDF and CCF phones to reset the totalizer.

Subscriber line signaling

If in-band tone multifrequency analog signaling is used on the subscriber lines subtending the RDT, the SMA transparently transports these coin commands.

If the signaling used on the subscriber lines subtending the RDT is made by changes to the electrical condition on the loop (metallic signaling), the IDT must translate these coin commands into notify messages that contain the notification indicator information element.

When the RDT receives the notify messages from the IDT, the RDT applies voltages or opens to the tip and ring of the line. These electrical signals applied to the tips and rings of coin phone lines cause the coin station to initiate actions, such as returning a deposit to a station user, or collecting a deposit.

Coin operation limitations and interactions The following limitation applies to coin functions. Coin phone calls, like all calls, cannot be initiated during a warm switch of activity (SWACT) or call processing (CP) switchover, since messaging between the SMA and RDT is inhibited.

Note 1: If a DS-1 link fails, the system causes channel reassignment. If a coin line call occupies a channel on the failed link and cannot be reassigned,

the SMA sends a coin return message to the RDT. The phone station user should receive money previously deposited.

Note 2: When a warm SWACT occurs, any call including a coin call, that has just entered the talking state may not be added to the records of the newly active unit. The call is dropped, and money previously deposited is returned to the phone station user after the user reoriginates and hangs up.

SMA service capabilities

In this section, the services the SMA supports are described. Only switched services are terminated on the SMA. Nonswitched and nonlocally switched services are directed by way of tandem DS-1 links at the RDT.

Plain ordinary telephone service (POTS)

The SMA supports plain ordinary telephone service (POTS) single-party flat rate and single party multi-rate.

Coin operation service

The SMA supports the following three types of coin calls:

- coin first (CCF)
- coin dial-tone first (CDF)

Coin first

Coin first (CCF) service requires the pay station phone to be off-hook, and the money to be deposited before the DMS SuperNode switch supplies the station dial tone.

For CCF phones, the correct coinage must be deposited before the off-hook is detected at the RDT.

The IDT sends a notify message with timed positive coin check information encoded in the notification indicator information element. When the RDT receives this message, it signals the coin station to check for the initial coin deposit.

The IDT sends a notify message with ground start mode information encoded in the notification indicator information element to the RDT. When the RDT receives this message, it sends reverse battery on the line which causes the coin station to home the coin station totalizer. The coin station reports on the coins it has collected.

If the right coins were deposited, the RDT sends the IDT a notify message that contains coin ground information in the notification indicator information element. This information informs the CM a coin has been deposited.

The IDT then sends an information message with negative ring information encoded in the signal information element to the RDT. This message allows the calling party in the coin station to receive ring-back. If the called party is on the telephone, the IDT sends a disconnect message, followed by an information message to allow ring-back.

If the call is a number for where toll is not applied, the IDT sends a notify message with timed negative coin control information encoded in the notification indicator information element. When the RDT receives this message, it signals the coin station to return the coins previously deposited.

For toll calls, no further coin functions occur until the CCF line goes on-hook. When the call is completed, the IDT sends a notify message with timed positive coin control information encoded in the notification indicator information element. When the RDT receives this message, it signals the coin station to collect coins.

Coin dial-tone first

For coin dial-tone first (CDF) service, the DMS SuperNode switch supplies dial tone when an off-hook condition occurs at the station. The call fails to go through unless the calling party deposits the appropriate amount of money by the end of dialing.

When a call is made from a CDF phone, the CM requests information about a coin deposit. The IDT sends a notify message that contains a coin presence request in the notification indicator information element. When a coin has been deposited, the RDT responds to the request by sending the IDT a notify message that contains coin ground information in the notification indicator information element. This information informs the CM a coin has been deposited.

If the call is to a number where toll is not applied, the IDT sends a notify message with timed negative coin control information encoded in the notification indicator information element. When the RDT receives this message, it signals the coin station to return the coins previously deposited.

When the call is completed, the IDT sends a notify message with timed positive coin control information encoded in the notification indicator information element. When the RDT receives this message, it signals the coin station to collect coins.

Coin call functionality

Several coin call messages are used when processing coin calls from CCF, and CDF phones. CCF phones use ground start and CDF use loop start. Ground start and loop start messages are described as follows:

- Ground start phones require an initial deposit before dial tone is provided.
- Loop start phones let the caller receive dial tone without an initial deposit. Since a deposit is not required, loop start phones let the caller dial special assistance calls (n11 calls, such as 911 and 411), inward wide area telephone service (INWATS), and operator assistance calls without charge. CCF phones make these calls without charge, but first a coin must be deposited. Once the call is made, the coin is returned.

Universal tone receiver services

A universal tone receiver (UTR) circuit pack (NT6X92) must be provisioned in slots 15 in the SMA. The UTR card provides a dedicated channel for digit collection during call setup, thereby unloading the network for a portion of call setup responsibility. The UTR card must be datafilled in table LTCINV to activate the UTR feature on the SMA. Refer to the *XPM Translations Reference Manual* for more information.

Custom local area signaling service

The SMA subsystem supports CLASS features when the optional CMR card is provisioned. Calling number delivery (CND) is a CLASS feature that gives single-party subscribers and Meridian Digital Centrex (MDC) customers the ability to receive the incoming calling party's number, time, and date of call on the customer premises equipment (CPE).

If the operating company requires that lines off the RDT have CND, the following requirements must be observed:

- A CMR card (NT6X78AB) must be provisioned in the SMA; this card transmits the CND data.
- The CMR card must be datafilled in table LTCINV. Refer to the *XPM Translations Reference Manual* for more information.

Meridian Digital Centrex (MDC) features on 500/2500 sets and attendant consoles

The SMA configuration supports all current MDC features. However, the SMA does not support trunks, so MDC features requiring trunks cannot terminate on the SMA.

Off-premise extension (bridged service)

The SMA configuration supports a connection between a remote extension station to a main station line using the MADN feature.

Private branch exchange (PBX) central office access

The SMA configuration supports connection of PBX to a central office that usually serves the PBX location. A station may receive calls through the attendant who directs the call to a station.

The station user can originate calls outside the PBX in two ways. The user can access the attendant who then connects the station to an access line, or the station user may bypass the attendant and dial an outside number directly using the direct outward dial (DOD) facility, if permitted.

Residential services

The SMA supports residential services that include features ordinarily available with plain old telephone service (POTS) and additional line features which were previously available only on MDC lines. The essential line (ELN) services feature is included.

Secretarial line

The SMA supports secretarial lines. A secretarial line provides an answering service when the called party is not available to take calls. Called party lines are bridges to the secretarial line.

Teen service

The SMA supports teen service. Teen service provides multiple directory numbers, each with distinctive ringing patterns, for the same line.

Toll diversion

The SMA supports toll diversion. Toll diversion is a service which permits a PBX to block some station-to-station calls beyond a limited area.

Wide area telecommunications services

The SMA supports wide area telecommunications services (WATS), that is, it allows a measured number of toll calls within a specific geographical area to be charged to a subscriber at a fixed monthly rate. WATS lines can be used to provide incoming service (INWATS), outgoing service (OUTWATS), or both incoming and outgoing service (two-way WATS).

800 service

The SMA configuration supports 800 services. With 800 services, the called party subscribes to the service and pays for the toll calls made to a specific number. Enhanced 800 service switching point (SSP) services are also supported in offices configured with SSP.

ISDN services

An integrated services digital network (ISDN) provides voice and data services through one or more NTBX02 enhanced D-channel handler (EDCH)

circuit cards and an NTBX01 enhanced ISDN signaling pre-processor (EISP) circuit card.

ISDN voice services include the following:

- plain old telephone service (POTS)
- electronic key telephone service (EKTS)
- direct outward dial (DOD)
- network class of service
- call forwarding
- call pickup
- automatic callback (ring again)
- call hold and additional call offering (call waiting)
- flexible calling
- hunt groups
- calling-line id
- busy override
- authorization codes

ISDN data services include the following:

- circuit-switched data
- packet-switched data

Note: The SMA does not support digital trunking or primary rate access (PRA)

Ringing

The SMA supports the following ringing:

- single party (DMS Ring Code 0; TR-303 Code 40)
- distinctive, for MDC (DMS Ring Codes 1-8; TR-303 Code 42, 44, and 71-76)
- multiparty fully selective
- coded
- superimposed
- teen
- revertive
- immediate

Dialing

The following dialing codes are interpreted:

- dial pulse
- dual-tone multifrequency dialing (DTMF)

Tones

The following tones are available:

- dial tone
- receiver off-hook
- audible ringback
- reorder
- busy

Deluxe Spontaneous Call Waiting Identification

Deluxe Spontaneous Call Waiting Identification (DSCWID) provides an interface to CPEs compliant with Bellcore specification TR-416. DSCWID is a CLASS feature that allows a subscriber to

- receive caller identification (CID) information from a call waiting to be connected, while the subscriber is off-hook
- control the disposition of incoming calls while an off-hook stable call exists

Bellcore TR-416 describes the requirements for DSCWID and specifies how this feature interfaces with an:

- ADSI set—a screen based ADSI CPE capable of displaying options.
- SCWID set—a non-ADSI CPE capable of delivery of CID data.
- 2500 set—a non-ADSI CPE capable of signaling DTMF but not capable of off-hook delivery of CID data.

The NT6X78AB, the NT6X92AD, and the NT6X92BB cards are required in the SMA for compliancy with ADSI protocol to support the DSCWID feature. ADSI protocol supports CLASS features that provide display-based information such as DSCWID, to subscribers with ADSI-compatible CPE. following circuit cards. The cards function as follows:

- The NT6X92BB UTR card identifies and processes tones for channels on the parallel speech bus.
- The NT6X78 CLASS modem resource (CMR) card supports calling number delivery (CND) and other CLASS services. The CMR card

provides the ADSI protocol to transmit CLASS data between the CC and ADSI compliant CPE.

- The NT6X69AD tone ROM card contains the ADSI tone as defined in TR-30.

Tones sent by the CM alert the DSCWID subscriber of a pending call, and the alert the CPE of pending caller data. When a line with the DSCWID option has a call established and a second call attempts to terminate to that line, the CM provides one of two types of alerting signals or tones. A subscriber alerting signal (SAS), or a SAS followed by a CPE alerting signal (CAS). The SAS is the tone the subscriber recognizes as the call waiting tone (CWT). The CAS alerts the CPE of forthcoming data if the subscriber line also has the CID feature.

In response to alerting tones the DSCWID CPE generates an acknowledgement (ACK) tone indicating readiness to receive DSCWID data. The ACK tone is collected on the UTR circuit card in the SMA. If the CPE is ADSI compatible, a DTMF A ACK signal is sent in response to the CAS. The following figure shows examples of responses from an ADSI-compatible set.

Figure 6-15 Example of a DSCWID call on an ADSI set

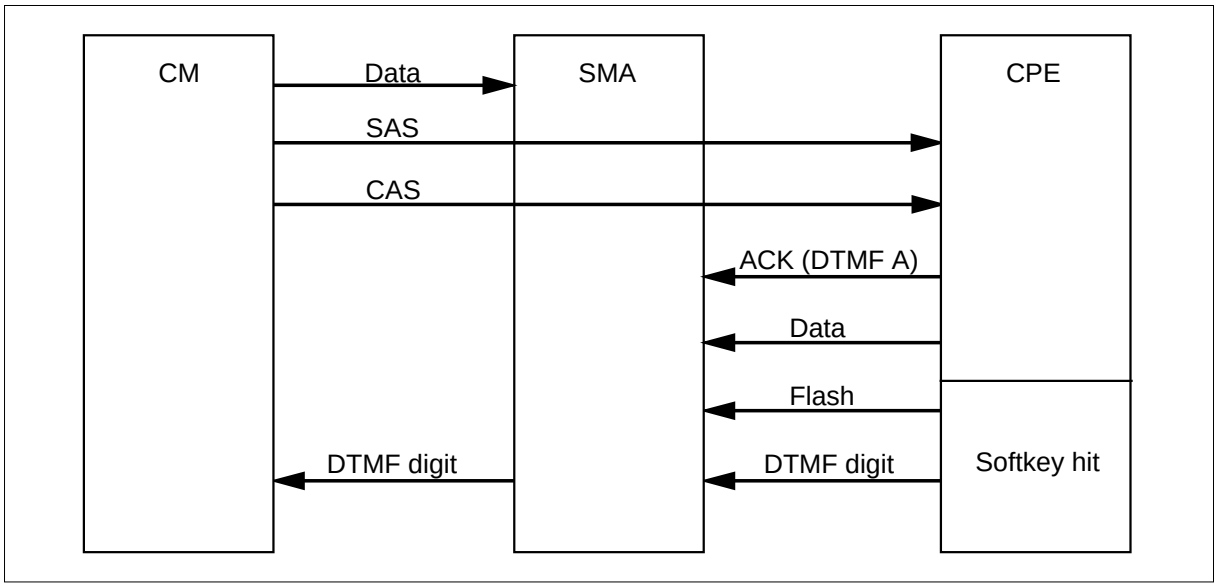

If the CPE is a SCWID CPE, the CPE sends a DTMF D ACK signal in response to the CAS. Once alerting tones are sent, the subscriber is allowed to control disposition of the incoming call. The subscriber responds by using the CPE softkeys if the CPE is ADSI, or hard-coded keys if the CPE is a SCWID, or a 2500 set. If the CPE does not respond with an acknowledgment tone, it is treated as a 2500 set. The following figures show examples of responses from a SCWID set and a 2500 set.

Figure 6-16 Example of a DSCWID call on a SCWID set

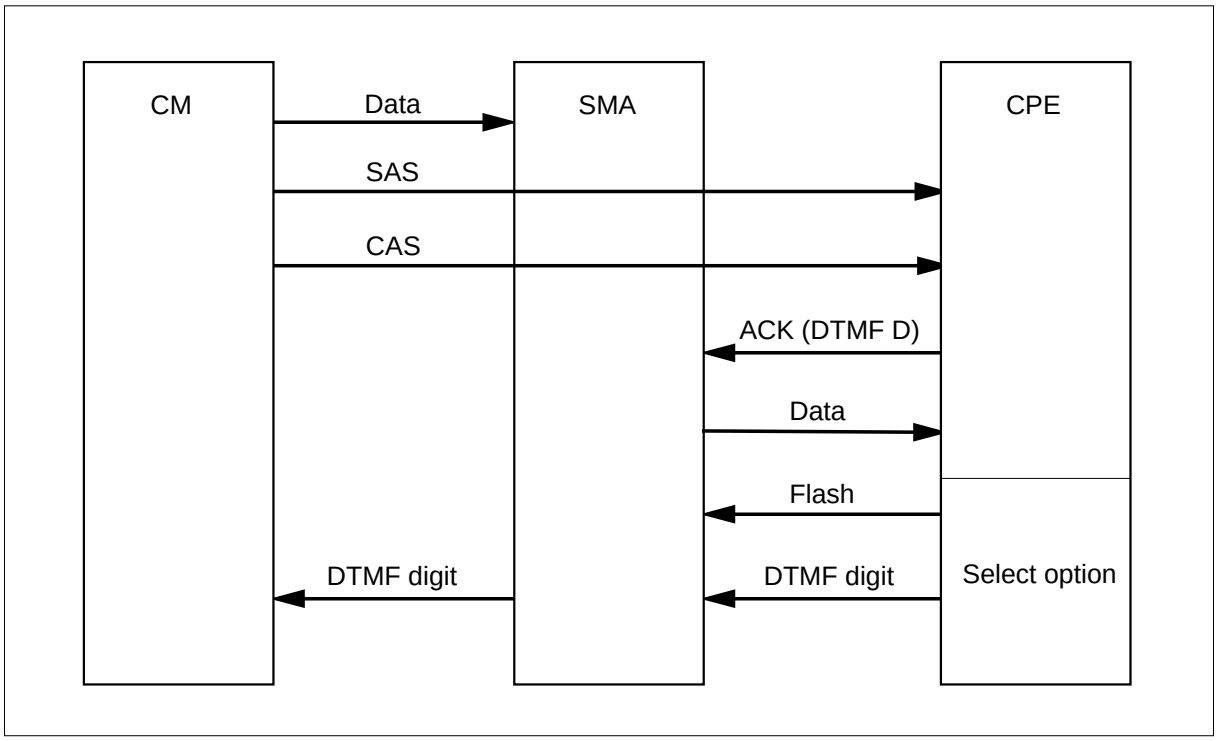

Figure 6-17 Example of a DSCWID call on a 2500 set

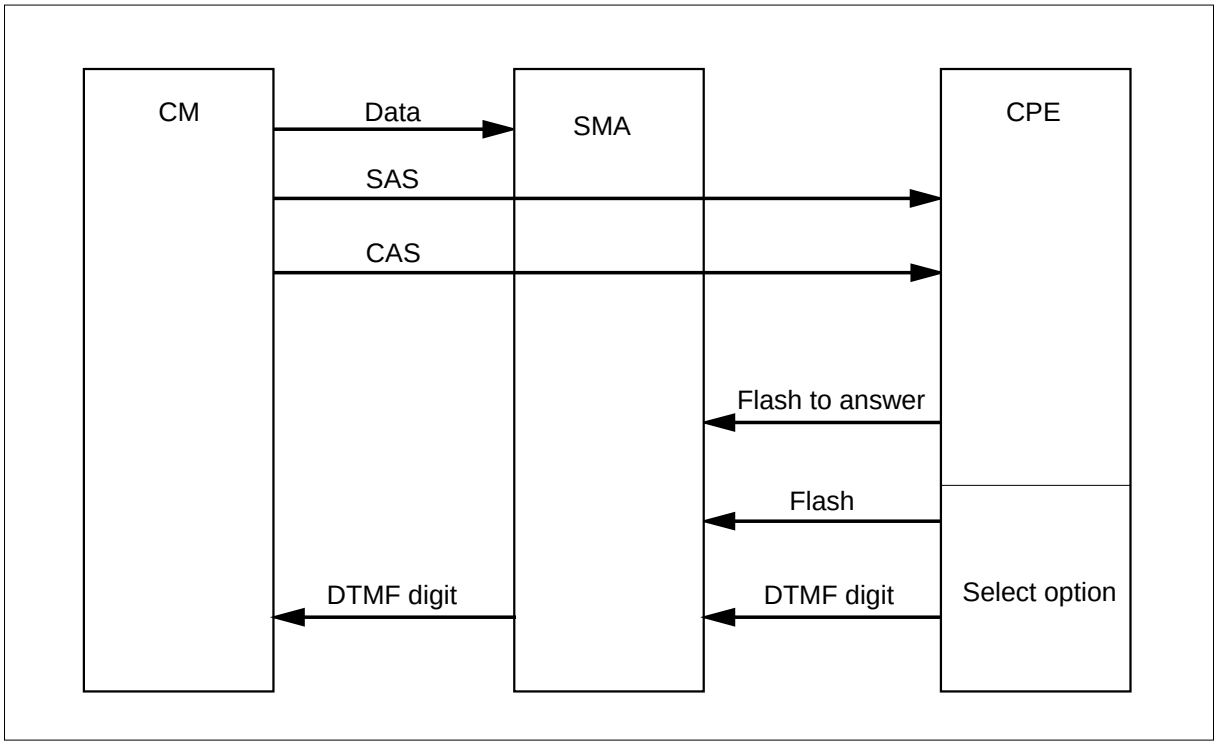

Alerting signals are sent to the CPE even when a UTR channel is not available. However, if no UTR channels are available, no data is sent to the CPE. For Bellcore compliancy, the DMS SuperNode switch must provide options if a flash is detected and it is unable to attach a UTR. The SMA complies with this requirement by sending a flash to the CM if it is unable to attach a UTR within 400 ms. If the first notification of a pending call is not acknowledged in 10 s, a second alerting signal is sent. If display data was not sent to the CPE because of the unavailability of UTR channels, the data is held and resent if re-alerting occurs.

After the SMA receives a flash signal from the customer's ADSI compatible CPE, the SMA starts a T-tone timer. The T-tone timer times for the maximum amount of time allowed between sending a flash and the DTMF digit on an ADSI set. The timeout is 600ms, during which the speech path is muted. The T-tone timer is started for the initial option selection during a DSCWID call, regardless of the CPE type. Any subsequent ADSI DSCWID option selections also start the T-tone timer.

Any subsequent DSCWID option selections on a SCWID or 2500 set use a T-flash timer. The T-flash timer is used after a call is answered with SCWID and 2500 sets to provide the customer with ample time to select an option after a flash. The T-flash timer is used on SCWID or 2500 sets because a subscriber does not have enough time to flash and dial a DTMF digit within 600 ms.

The operating company can set the T-flash timer from 1 to 8 s, default is 1.5 s. The SMA starts the T-flash timer if the NONADSI field in table DSCWDTYP is set to Y, and the SMA receives a flash signal from a customers SCWID or 2500 set during the held or conference call state. The SMA must keep track of the DSCWID call state and the type of CPE as the timer used is dependent on this criteria. If the SMA cannot attach a UTR before 400 ms, then the RETURN option is applied.

The CM attempts to stay synchronized with the CPE at all times. This close supervision prevents some possible situations where the CPE thinks it performed a function, but the DMS SuperNode switch does not process the option based on the call state. DSCWID call waiting disposition options are:

- answer the new call and put the existing call on hold
- disconnect the existing call and answer the new call
- forward the new call
- connect the new call to a busy announcement
- put the new call on hold after connecting to a hold announcement
- conference the new call with the existing call

The following figure depicts the interaction between the ADSI set dispositions.

Figure 6-18 DSCWID with ADSI set dispositions

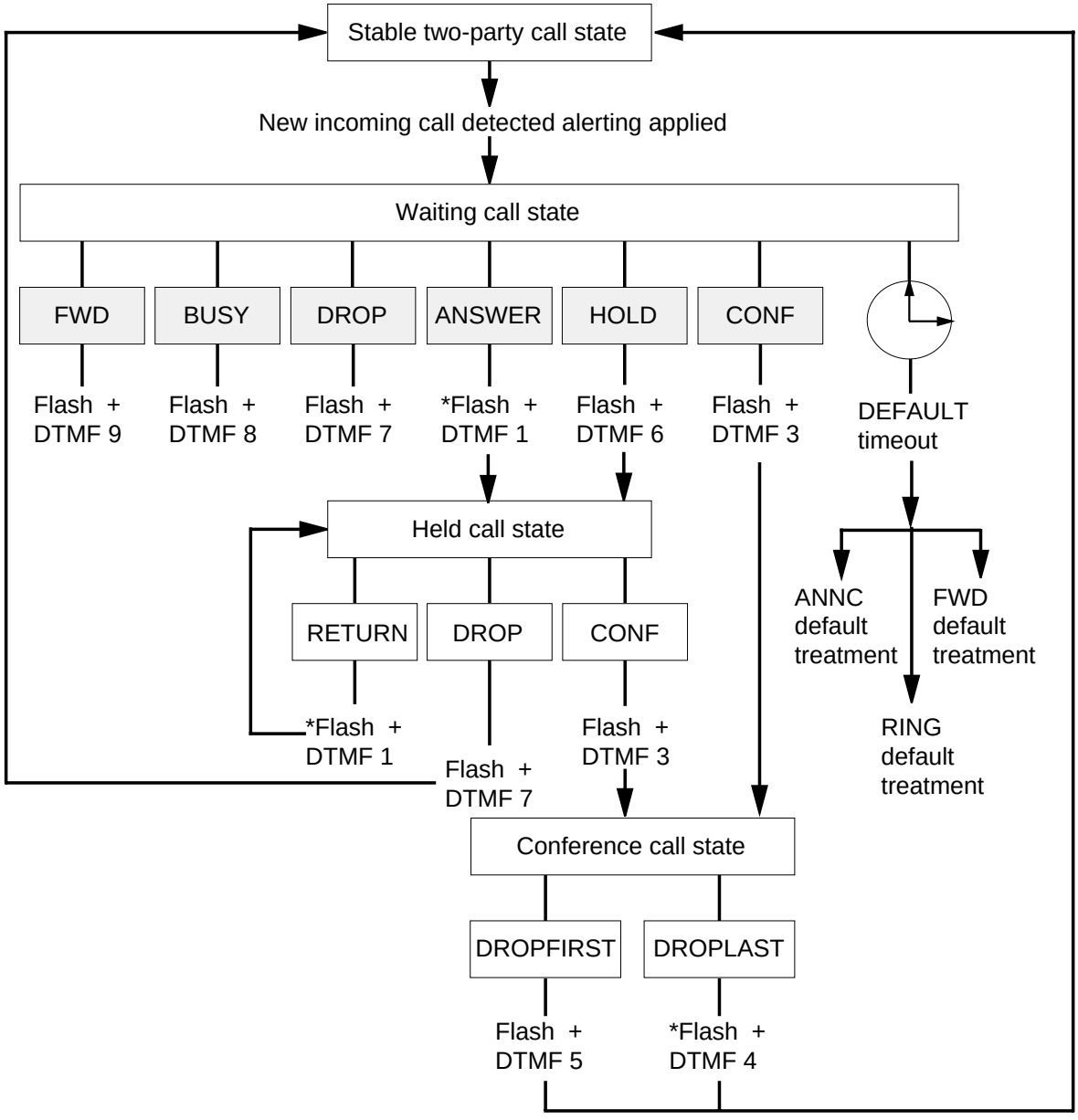

Note 1: An * indicates a flash can be performed to accomplish the same function as sending the DTMF code for that digit.

Note 2: If a non-ADSI set is configured for hard-coded keys to perform DSCWID dispositions, or the subscriber is able to provide a DTMF-digit within 600 ms, dispositions could be available if NONADSI = Y in table DSCWDTYP for the given DSCWID type.

Preparing to datafill SMA

PCL—New software delivery vehicle

After BCS36, Nortel (Northern Telecom) will begin delivering Product Computing-Module Loads (PCLs) instead of BCS releases or Universal Software Loads (USLs).

A PCL consists of features selected from the development stream software product intended for a particular application in a particular market. The PCL contains the capabilities previously divided among many related NTX packages. An eight-digit ordering code replaces the NTX package codes.

In the following table is the ordering code and functional group name required for the SMA, as well as a listing of the former NTX package that is included in the functional group. This capability is associated with the SMA.

Table 6-6 SMA ordering code

Ordering code	Functional group name	Former NTX package codes
SMA00001	TR-303 Generic Interface	NTXT23AA—SMA TR-303 MVI-20

Tasks associated with datafilling the SMA

This section describes the tasks associated with datafilling the SMA using the DMS switch table editor. The SMA tables fall into several categories. These are listed in the following datafill summary:

- test trunks, test lines, and service circuits in table CLLI
- SMA and IDT datafill in tables SITE, LTCINV, LTCPSINV, RDTINV, and LNINV
- call processing translations in the trunks, lines, screening, and routing tables: TRKGRP, TRKSGRP, TRKMEM, LINEATTR, LENLINES, and LENFEAT
- scan and signal distribution points in tables SCGRP and SDGRP
- metallic test access assignments in tables MTAMDRVE, MTAVERT, and MTAHORIZ

Static datalog tracking

Changes made to tables RDTINV, LTCINV, and LTCPSINV are tracked by logs. These logs are TUPC100, TUPC101, TUPC102, and TUPC103. Because these logs indicate datafill changes, they provide a starting point for recreating, debugging, and solving field problems.

This feature is helpful because the symptoms available at the time of service degradation are not always enough to diagnose the problem occurring in the field. For more information on TUPC logs, see the *XPM Log Reports Reference Manual*.

When to update static data

For the SMA to execute call processing, the SMA must know how its links and lines have been configured, and which cards, ports, execs, and integrated digital terminals (IDT) are present. This information, contained in tables, both external and internal, is called static data because it does not change as calls are processed. An example of nonstatic data would be the call processing connections established when a call is set up and torn down when a call is finished.

Static data is always downloaded to the SMA if the static data has changed since the last time it was downloaded and the SMA is made busy and returned to service.

A static data update is not performed under the following conditions:

- The static data checksum is successful. The static data checksum is recalculated when an RTS is performed and then sent to the computing module after a SMA dynamic static data update. This allows SMA units to return to service in less time.
- The data integrity audit of SMA static data, which is performed on an IDT by IDT basis, verifies the integrity of the SMAs static data.

Note 1: When the static data contained in the DMS host and the SMA do not match, data corruption can result. One possible outcome of such a mismatch is the DMS host determines a line exists, and the SMA and the associated IDT determines it does not exist. This results in a call being lost.

Note 2: SMA SWACT can be initiated if static data corruption is detected in the active SMA unit. This prevents degraded performance because of static data corruption.

Dynamic static data update

A dynamic static data update provides the capability for in-service SMAs to reconfigure the SMA and the SMA peripheral side (P-side) and C-side links without having to update the static data of the affected in-service IDT through an RTS. Changes to an IDT and modifications to SMA P-side links and C-side speech links can be made with the SMA in service. However, changes to SMA message links require the SMA to be manually busy.

Dynamic static data updates do not eliminate all static data mismatch ISTb conditions. There are table control changes that affect static data in

unsupported data fields, which may cause the SMA to go ISTb because of changes in these fields.

TR-303 Generic Interface

Functional group

Functional group: SMA00001

Feature package

Feature package: NTXT23AA (TR-303 Generic Interface)

Release applicability

XPM08 and up

Prerequisites

To operate, TR-303 Generic Interface has the following prerequisites:

- Bilge, NTX000AA
- Common Basic, NTX001AA
- New Peripheral Maintenance, NTX270AA
- Local Features I, NTX901AA
- Subscriber Carrier Module, NTXF46AA
- XPM PLUS, NTXR34AA

Description

The multi-vendor interface (MVI) is an interface between the Digital Multiplex System-100 (DMS-100) and Bellcore TR-TSY-000303 (TR-303) complaint access vehicles called remote digital terminals (RDT).

The MVI allows connection to access vehicles conforming to the generic integrated digital loop carrier (IDLC) interface specified in Bellcore's TR-303, as modified by the Nortel (Northern Telecom) Interface Specification (NIS A217-2).

The DMS-100 supports the Bellcore standard TR-303 for IDLC systems access vehicle called an RDT. An IDLC system consists of a digital loop carrier (DLC) RDT, and a local digital switch (LDS).

The switch resources serving a RDT are called integrated digital terminals (IDT). MVI implements the IDT end of the generic IDLC TR-303 interface for Feature Set A (T1 interface), and uses the time-slot management channel (TMC) signaling method.

MVI is implemented using the base hardware and software developed for the SMA product. The MVI operates in a DMS-100 SuperNode environment.

TR-303 Generic Interface (continued)

MVI supports the Enhanced Network (ENET) and Junctored Network (JNET). The NT40 system is not supported.

Translations table flow

TR-303 Generic Interface does not affect translations table flow.

Limitations and restrictions

The following limitations and restrictions apply to TR-303 Generic Interface:

- MVI RDTs support RDTLSG, RDTCON, RDTISD, and RDTMPY card codes. RDTLRB will be supported in the future. RDTEBS is not supported.
- Direct inward dialing (DID) services are not supported.
- If field SHELF of a multi-vendor-interface RDT LEN is set to zero, the slot field of that RDT LEN cannot be set to zero.
- Frequency selective ringing is not supported.
- Semi-post paid coin lines—all attempts to datafill a line on a TR-303 RDT are rejected if the line class code is coin semi-postpay (CSP)
- To restore all ISDN lines provisioned at an RDT when the DMS-100 switch is upgraded to NA006 and up, data in field DS0PT must be converted to values for new fields CSPORT and CSCHNL in the read-only table RDTLT and then copied to the restore side. Field TIMESLOT in table RDTLT is copied to the restore side.

Interactions

TR-303 Generic Interface has no functionality interactions.

Activation/deactivation by the end user

TR-303 Generic Interface requires no activation or deactivation by the end user.

Billing

TR-303 Generic Interface does not affect billing.

Station Message Detail Recording

TR-303 Generic Interface does not affect Station Message Detail Recording.

Datafilling office parameters

TR-303 Generic Interface does not affect office parameters.

Office parameters used by TR-303 Generic Interface

Table name	Parameter name	Explanation and action
OFCOPT	XPM_MATE_DIAGNOSTICS_ AVAILABLE	XMS-based peripheral module (XPM) mate diagnostics are activated by setting this parameter to Y. This ensures diagnostics are available to the resident switch. The XPM mate diagnostic feature enables the central control (CC) to diagnose a XPM unit through its mate XPM unit.
	VSLE_PRESENT	Visual screen list editing. When set to N (no), the analog services display interface (ADSI) line option must be assigned to the subscriber line in order for visual screen list editing (VSLE) to be accessed. When set to Y, VSLE is accessed without ADSI being assigned to the line.

Datafill sequence

Datafill sequence is unchanged for the TR-303 Generic Interface.

The following table lists the tables that require datafill to implement TR-303 Generic Interface. The tables are listed in the order they are datafilled.

Datafill tables required for TR-303 Generic Interface (Sheet 1 of 5)

Table	Purpose of table
CLLI	Common language location identifier. Identifies the maintenance and test trunks used in the SMA subsystem.
SITE	Site. Allows the DMS switch to recognize the remote equipment tied to the host.
PMNODES	Peripheral module nodes. Contains all nodes resident in all XPMs for a given site. This table is datafilled automatically by the system.
LTCINV	Line trunk controller inventory. Inventories various peripheral module (PM) types including the SMA, and excluding P-side link assignments.
Note: This table is datafilled through SERVORD; therefore, no datafill procedure or example is provided. Refer to “SERVORD" for an example of using SERVORD to datafill this table.	

TR-303 Generic Interface (continued)

Datafill tables required for TR-303 Generic Interface (Sheet 2 of 5)

Table	Purpose of table
CARRMTC	Carrier maintenance control. Allows the DMS switch administration to datafill maintenance control information in peripherals, out-of-service limits, alarms, and system return-to-service occurrences.
PMLOADS	Peripheral module loads. Stores a load map between the load names and devices where the loads reside. This permits auto load to locate load files without the intervention of operating company personnel.
LTCPSINV	Line trunk controller P-side line inventory. Identifies the SMA module type, number, and port designation of the P-side links.
ALMSCGRP	Alarm scan group. Records the circuit equipment, location, type of card, and serves as a head table for the respective scan points.
ALMSDGRP	Alarm signal distributor group. Records the circuit equipment, location, and type of card and serves as a head table for the respective signal distributor points.
ALMSC	Alarm scan. Identifies the functions to be performed by each of the assigned scan points in the alarm scan groups.
ALMSD	Alarm signal distributor point. Identifies the function to be performed by each of the assigned signal distributor points in the alarm signal distributor groups.
DCHINV	D-channel handler inventory. Identifies the physical, service, and channel allocation characteristics of D-channel hander (DCH).
ISGDEF	ISDN service group definition. Identifies the ISDN service group (ISG) numbers, PM type, the services provided, and the allocation of services to channels.
LTGRP	Logical terminal group. Allows up to 32 logical terminal group definitions.
LTDEF	Logical terminal definition. Defines logical terminals within group and access privileges.
LTMAP	Logical terminal map. Maps the ISDN logical terminals to a LEN or terminal identifier (TEI). (See Note.)
SPECCONN	P-Side to P-side special connection. Defines special permanent dedicated connections through the SMA.
RDTINV	Remote digital terminal. Allows the DMS switch administration to datafill RDTs and their corresponding IDTs. This table contains the C-side connectivity information and RDT configuration information.
Note: This table is datafilled through SERVORD; therefore, no datafill procedure or example is provided. Refer to “SERVORD" for an example of using SERVORD to datafill this table.	

TR-303 Generic Interface (continued)

Datafill tables required for TR-303 Generic Interface (Sheet 3 of 5)

Table	Purpose of table
TMINV	Trunk module inventory. Identifies the trunk modules (TM) that contain test circuits that terminate test pairs connected to RDT lines.
TRKGRP	Trunk group. Identifies the test circuits associated with the maintenance and test trunks.
TRKSGRP	Trunk subgroup. Lists the supplementary information for each subgroup assigned to one of the trunk groups listed in table TRKGRP.
TRKMEM	Trunk member. Identifies the circuits associated with the test equipment used to test lines and trunks.
LINEATTR	Line attribute. Assigns line attributes to regular lines in table LENLINES, Meridian stations and attendant consoles in the MDC translations tables.
LNINV	Line circuit inventory. Retains an inventory of subscriber lines and associated line cards.
RDTLT	Remote digital terminal line termination. Specifies the next operation to be performed by line object provisioning.
IBNLINES	IBN line assignment. Defines the line assignments for each MDC station number. (See Note.)
IBNFEAT	IBN line feature. Defines the line features assigned to the MDC lines listed in table IBNLINES. (See Note.)
CDCLENS	Customer data change line. Lists the line equipment numbers (LEN)s assigned to a customer group.
KSETINV	Business set and data-unit inventory. Stores inventory data for each line card slot assigned to Meridian business sets and data units. (See Note.)
KSETLINE	Business set and data-unit inventory line assignment. Defines the data for directory number appearances on Meridian business sets and data units. (See Note.)
KSETFEAT	Business set and data-unit inventory line feature. Defines the line features assigned to business sets and data units listed in table KSETLINE. (See Note.)
Note: This table is datafilled through SERVORD; therefore, no datafill procedure or example is provided. Refer to “SERVORD" for an example of using SERVORD to datafill this table.	

TR-303 Generic Interface (continued)

Datafill tables required for TR-303 Generic Interface (Sheet 4 of 5)

Table	Purpose of table
LENLINES	Line assignment. Lists the following data for each line: • site name, if the line is remote • line equipment number • party where the directory number is assigned • ringing code assigned to the directory lines • directory number • signal type • index into the line attribute (LINEATTR) table • list of options (See Note.)
LENFEAT	Line feature. Lists the features assigned to a specific line in table LENLINES. (See Note.)
SCGRP	Scan group. List the physical location of the scan groups that provide SC points for line features.
SDGRP	SIgnal distributor group. List the physical location of the SD groups that provide SD points for line features.
LTDSD	Line-test desk signal distribution. Identifies the SD point used to drive the applique circuit during mechanized loop testing.
MTAMDRVE	Metallic test access minibar driver. Specifies the physical location of the metallic test access (MTA).
MTAVERT	Metallic test access vertical connection. Identifies the vertical connectivity to the MTA matrix.
MTAHORIZ	Metallic test access horizontal connection. Lists the assignment to a horizontal and horizontal group of metallic test access minibar drivers (MTAM).
AMAOPTS	AMA options. Controls the activation and scheduling of the recording options for automatic message accounting (AMA).
RESFEAT	Residential line feature. Contains the assignment of custom local area signaling services (CLASS) features for residential lines. (See Note.)
Note: This table is datafilled through SERVORD; therefore, no datafill procedure or example is provided. Refer to “SERVORD" for an example of using SERVORD to datafill this table.	

Datafill tables required for TR-303 Generic Interface (Sheet 5 of 5)

Table	Purpose of table
RESOFC	Residential line CLASS office data. Contains data pertaining to CLASS features. (See Note.)
TEXTPHRS	Test phrases. Contains the physical text phrases displayed on the customer premise equipment (CPE).
TEXTLOG	Logical display text. Contains the logical names of the physical text phrases.
SOFTKEY	Softkey. Specifies softkey information for application services.
DCSWDTYP	Deluxe spontaneous call waiting identification (DSCWID) type. Defines DSCWID treatment of subscriber lines.
Note: This table is datafilled through SERVORD; therefore, no datafill procedure or example is provided. Refer to “SERVORD" for an example of using SERVORD to datafill this table.	

Datafilling table CLLI

Common language location identifier (CLLI) codes are used to uniquely identify the far end of each announcement, tone, trunk group, test trunk, national milliwatt test lines, and service circuit.

The next table shows the datafill specific to TR-303 Generic Interface for table CLLI. Only those fields that apply directly to TR-303 Generic Interface are shown.

Datafilling table CLLI (Sheet 1 of 3)

Field	Subfield or refinement	Entry	Explanation and action
CLLI		see subfields	Common language location identifier. This 16-character field uniquely identifies the far end of each announcement, tone, trunk group, test trunk, national milliwatt test lines, and service circuit.
	PLACE	alphanumeric	Place. This four-character code identifies the name of the city or town at the far end of each group.
Note 1: Memory is allocated by the SIZE field in table data size (DATASIZE) for the entry with field DATSKEY equal to CLLI. ***Note 2:*** The maximum number of CLLI codes is 8192.			

TR-303 Generic Interface (continued)

Datafilling table CLLI (Sheet 2 of 3)

Field	Subfield or refinement	Entry	Explanation and action
	PROV	alphanumeric	Province or state. This two-character code identifies the province or state at the far end of the trunk group.
	BLDG	alphanumeric	Building. This two-character code identifies the building number at the far end of the trunk group.
	TRAFUNIT	alphanumeric	Traffic unit. This three-character code identifies the destination of the traffic unit at the far end of the trunk group.
	SUFX	alphanumeric	Suffix. This one-character code uniquely identifies trunk groups that terminate at the same CLLI location.
ADNUM		0 to a number one less than the size of table CLLI shown in table DATASIZE.	Administrative trunk group number. Enter a number from 0 to a number one less than the size of table CLLI shown in table DATASIZE. The value must be unique.
TRKGRSIZ		0-2047	Trunk group size. This four-character field is equal to the maximum quantity of trunk members expected to be assigned to the trunk group.
ADMININF		see subfields	Administrative information. This 32-character field is used by the operating company to record administrative information. The information in this field is not used by the switching unit. The recommended subfields are TRAFCLS, OFFCLS, and TRKGRTYP.
	TRAFCLS	alphanumeric	Trunk group traffic class. This field is optional input for administrative purposes only.

Note 1: Memory is allocated by the SIZE field in table data size (DATASIZE) for the entry with field DATSKEY equal to CLLI.

Note 2: The maximum number of CLLI codes is 8192.

Datafilling table CLLI (Sheet 3 of 3)

Field	Subfield or refinement	Entry	Explanation and action
	OFFCLS	alphanumeric	Office class. This field is optional input for administrative purposes only.
	TRKGRTYP	alphanumeric	Trunk group type. This field is optional input for administrative purposes only.
Note 1: Memory is allocated by the SIZE field in table data size (DATASIZE) for the entry with field DATSKEY equal to CLLI. ***Note 2:*** The maximum number of CLLI codes is 8192.			

Datafill example for table CLLI

The following example shows sample datafill for table CLLI.

MAP display example for table CLLI

```
      CLLI   ADNUM   TRKGRSIZ                    ADMININF
-------------------------------------------------------
MTADRIVER    250          32  METALLIC_TEST_ACCESS_DRIVER
  MONTALK    254          32                VERIFICATION
   MJACK     257         256               METALLIC_JACK
     MTU     259          32           METALLIC_TEST_UNIT
```

Datafilling table SITE

Table SITE contains data for the switching unit and for all remote locations connected to it. Before a LEN can be assigned and before a PM can be datafilled, table SITE must be datafilled to allow the DMS SuperNode switch to recognize the equipment.

The first entry in table SITE must be HOST for the host switching unit. The site names for the remote locations are defined by the operating company.

TR-303 Generic Interface (continued)

The following table shows the datafill specific to TR-303 Generic Interface for table SITE. Only those fields that apply directly to TR-303 Generic Interface are shown.

Datafilling table SITE (Sheet 1 of 2)

Field	Subfield or refinement	Entry	Explanation and action
NAME		Host or alphanumeric	Site name. Enter the site name assigned to the remote switching unit. The first character must be a letter. Site names may be up to four characters in length. PM type names cannot be used for site names. The first entry in this field is for the host switching unit.
LTDSN		00-99	LEN test desk site number. Enter a unique two-digit number required to dial the site that appears under field NAME.
MODCOUNT		0	Module count. Enter zero.
OPVRCLLI		Ver90 or alphanumeric	Operator verification CLLI. Enter the CLLI assigned to the operator verification trunk group at the remote location.
ALMDATA		see subfields	Alarm data. This field is for remote locations only and consists of subfields ALMTYPE, TMTYPE, TMNO, TMCKTNO, POINT, and CONTMARK.
	ALMTYPE	CR, MJ, MN, or blank	Alarm type. Enter the alarm type. This field is for remote locations. Where entry is for the host switching unit, leave blank.
	TMTYPE	RSM, RMM, or blank	Trunk module type. Enter the trunk module type (remote service module) where the miscellaneous signal distributor point assigned to the alarm is located. Where entry is for the host switching unit, leave blank.
	TMNO	0-99	Trunk module number. Enter the number assigned to the remote service module where the miscellaneous signal distributor point assigned to the alarm is located. Where entry is for the host switching unit, leave blank.
Note: Memory is automatically allocated for a maximum of 32 sites.			

Datafilling table SITE (Sheet 2 of 2)

Field	Subfield or refinement	Entry	Explanation and action
	TMCKTNO	0-23	Trunk module circuit number. Enter the trunk module circuit on the remote service module where the miscellaneous signal distributor point assigned to the alarm is located. Where entry is for the host switching unit, leave blank.
	POINT	0-6	Point. Enter the signal distributor point number within the trunk module circuit number which is assigned to the alarm. Where entry is for the host switching unit, leave blank.
	CONTMARK	+ or $	Enter a plus sign (+) when additional data for the site is specified on the next record. Otherwise, enter a dollar sign ($) to terminate this vector.
Note: Memory is automatically allocated for a maximum of 32 sites.			

Datafill example for table SITE

The following example shows sample datafill for table SITE.

MAP display example for table SITE

```
        NAME
LTDSN        MODCOUNT      OPVRCLLI
                                                ALMDATA
-------------------------------------------------------
        HOST
   00              4          VER90              $
```

Datafilling table PMNODES

Table Peripheral module nodes (PMNODES) is a read only table, and is used by the CM to control XPM unit node tables. Table PMNODES is automatically datafilled when entries are added or changed in inventory tables, such as line trunk controller inventory (LTCINV). An entry exists in table PMNODES for all subtending nodes of each XPM. Fields are updated to reflect CM control of configuration data tables in the XPM nodes. As nodes are deleted, spaces may appear in the table, these spaces are not always filled when a new node is added.

Tuples in table PMNODES, are managed to enable subtending nodes to have a higher index than their head node. Attempts by operating company

TR-303 Generic Interface (continued)

personnel to update this table directly are rejected. XPM resources are checked when a tuple for a subtending node is added or changed in an inventory table. During a one night process (ONP) table PMNODES must be transferred before any hardware inventory tables. Warnings are displayed when a XPM does not have the table space, port, or terminal resources to support the new requirements.

DANGER

An attempt to add or change tuples in any inventory table may be rejected by the system if table space or node resources are not available.

Attempted changes in the inventory tables with the table editor may be rejected. The system displays an explanation and possible corrective actions. Usually BSYing and RTSing a XPM, defragments the node tables, thus freeing required space. If XPM resources are not available, the following message is displayed.

The new node cannot be supported on SMAT

ACTION: None, resources have been exceeded on this XPM.

The following table shows the datafill specific to TR-303 Generic Interface for table PMNODES. Only those fields that apply directly to TR-303 Generic Interface are shown.

Additional information on datafilling this table is available in the data schema section of the *Translations Guide*.

Datafilling table PMNODES (Sheet 1 of 3)

Field	Subfield or refinement	Entry		Explanation and action
TABKEY		0 to 4095 to 117	0	Table key. Two-part key, separated by a space, identifying the XPM where the unit node table is. The first part is host external node number. The second part is internal index number.
EXTNDNUM		0 to 4095		External node number. External number assigned by CM to the XPM identified in field TABKEY.
NODETYPE		LTC_NODE		Node type of XPM. Generic type of PM node.

Datafilling table PMNODES (Sheet 2 of 3)

Field	Subfield or refinement	Entry	Explanation and action
PMTYPE		SMA	PM type. Specific PM type assigned to the node.
LEVEL		0 to 15	PM level. The number of device levels the XPM node is separated from the messaging host. Begins at level 0 for messaging (head) XPMs.
MSGHOST		0 to 4095	Messaging host. External node responsible for transferring messages to this node. A messaging host must be capable of transferring messages.
PHYSHOST		0 to 4095	Physical host. External node this XPM node is physically attached.
PORTS		0 to 127	Number of ports. Total number of P-side ports in the physical host required by this XPM node.
STPORT		0 to 255	Starting port. First P-side port in the physical host used by this XPM node.
TERMS		0 to 4095	Number of terminals. Total number of terminals in the physical host required by this XPM node.
STTERM		0 to 8675	Starting terminal. First terminal in the physical HOST used by this XPM node.
PROTOCOL		MDS30, MDMSX or MHDLC	Message protocol. Type of message protocol used by the physical host to node links.
MS		M or S	Master or slave. Enter M if this node contains the master clock, otherwise enter S for slave clock.
IPML		Y or N	Inter-peripheral message link (IPML). Enter yes (Y) if this node is configured as part of an IPML, otherwise enter no (N).
MODE		T or P	Table entry mode. Entries in table are made by terminal (T) or port (P) indexing.

TR-303 Generic Interface (continued)

Datafilling table PMNODES (Sheet 3 of 3)

Field	Subfield or refinement	Entry	Explanation and action
SLLCON		Y or N	Site line load control. Enter yes (Y) if this node is at a site using Essential Line Service Protection (ESP), or other site line load control features, otherwise enter no (N).
NT6X28		N	Uses NT6X28 card. Enter yes (Y) if this XPM uses the NT6X28 circuit card. The NT6X28 signaling interface card is used on the International Digital Trunk Controller (IDTC). Always enter no (N).
LCMLGMEM		Y or N	LCM large memory. Enter yes (Y) if this XPM is a LCM with large memory (256k bytes), otherwise enter no (N).
RSVPORTS		Y or N	Reserved ports. Enter yes (Y) if this XPM has ports reserved for messaging, otherwise enter no (N).
RSVTERMS		Y or N	Reserved terminals. Enter yes (Y) if this XPM has terminals reserved for messaging, otherwise enter no (N).
MATENODE		Y or N	Mate node. Enter yes (Y) if this node is part of a dual configuration, otherwise enter no (N).
PACKED		Y or N	Packed internal tables. Enter yes (Y) if internal node tables are packed on this node. ***Note:*** Previously the node table was compressed when the XPM was returned-to-service with the NODATASYNC option. Compression now happens when both units of a XPM are taken out-of-service, and loaded by the CM.
SUPPCDT		YY NN	Support configuration data table (CDT). Enter yes (YY) for each unit if CDT management is supported, otherwise enter no (N).
CMINCTRL		Y or N	CM node control. Enter yes (Y) if the node is under CM control, otherwise enter no (N).

Datafill example for table PMNODES

The following examples show datafill for table PMNODES.

MAP display example for table PMNODES (SMA tuple)

```
Table: PMNODES
  TABKEY  EXTNDNUM   NODETYPE   PMTYPE LEVEL MSGHOST  PHYSHOST  PORTS
-------------------------------------------------------------------------
  25   1      25     LTC_NODE     SMA    0      25        25     16
  STPORT  TERMS STTERM  PROTOCOL MS IPML MODE SLLCON NT6X28 LCMLGMEM
-------------------------------------------------------------------------
     0      1     1      MDS30   S   N    P     N      N        N
  RSVPORTS   RSVTERMS   MATENODE   PACKED   SUPPCDT   CMINCTRL
-------------------------------------------------------------------------
    Y          Y           N         Y        YY         Y
```

MAP display example for table PMNODES (SMA to IDT tuple)

```
Table: PMNODES
  TABKEY  EXTNDNUM   NODETYPE   PMTYPE LEVEL MSGHOST  PHYSHOST  PORTS
-------------------------------------------------------------------------
  25   2     33      IDT_NODE     IDT    1      25        25     20
STPORT  TERMS STTERM  PROTOCOL MS IPML MODE SLLCON NT6X28 LCMLGMEM
-------------------------------------------------------------------------
  0       1     1      MDS30   S    N    P     N      N       N
RSVPORTS   RSVTERMS   MATENODE   PACKED   SUPPCDT   CMINCTRL
-------------------------------------------------------------------------
   Y          Y           N         Y        YY         Y
```

Note: Each SMA node in the link capable of messaging would have a tuple in table PMNODES to address the IDT.

Datafilling table LTCINV

Table line trunk controller inventory (LTCINV) contains the inventory data, excluding P-side link assignments addressed in table LTCPSINV, for various PM types, including the SMA.

TR-303 Generic Interface (continued)

The following table shows the datafill specific to TR-303 Generic Interface for table LTCINV. Only those fields that apply directly to TR-303 Generic Interface are shown.

Datafilling table LTCINV (Sheet 1 of 4)

Field	Subfield or refinement	Entry	Explanation and action
LTCNAME		see subfields	Line trunk controller name. This field contains subfields XPMTYPE and XPMNO.
	XPMTYPE	SMA	Peripheral module type. Enter the type of PM.
	XPMNO	0-127	Peripheral module number. The range is 0-127 because the SMA is part of the host office.
ADNUM		0-4095	Administration number. This number is used by the engineering and administrative data acquisition system for data collection (EADAS/DC) to identify nodes within the DMS-100 Family switch. This number remains fixed over dump and restore.
FRTYPE		LTEI	Frame type. Enter the frame type where the PM equipment is mounted.
FRNO		0-511	Frame number. Enter the frame number of the SMA.
SHPOS		18, 32, 51, and 65	Shelf position. Enter the position of the shelves on the frame in inches above the floor level.
FLOOR		0-99	Floor. Enter the floor where the PM equipment frame is located.
ROW		A-H, J-N, P-Z, AA-HH, JJ-NN, and PP-ZZ	Row. Enter the row on the floor where the PM equipment frame is located.
FRPOS		0-99	Frame position. Enter the position in the row of the PM equipment frame.
EQPEC		alphanumeric	Equipment product engineering code. Enter the PEC of the PM.
Note: Memory is automatically allocated for a maximum of 128 tuples for table LTCINV.			

Datafilling table LTCINV (Sheet 2 of 4)

Field	Subfield or refinement	Entry	Explanation and action
LOAD		alphanumeric	Load name. Enter the name given to the issue of PM software.
EXECTAB		see subfields	Executive table. This field contains subfields TRMTYPE, EXEC, and CONTMARK. ***Note:*** Changes to fields with multiple entries should be made in the PROMPT mode only.
	TRMTYPE	alphanumeric	Terminal type. Enter the type of terminal models to be used. POTS is used for regular lines, RMM_TERM for remote maintenance trunks, ABTRK for regular trunks, R1_TERM for DTC300 trunks, and MX5X09 and M5X12 for Meridian 9 and 12 button sets.
	EXEC	alphanumeric	Executive programs. Enter the set of executive programs required for the PM specified in the TRMTYPE field.
	CONTMARK	+ or $	Continuation mark. Enter a plus sign (+) when the vector continues on the next line. Otherwise, enter $ to end the vector.
CSLNKTAB		see subfields	C-side link table. For switches equipped with the old junctored network (JNET), this field contains subfields NMPAIR, NMPORT, and CONTMARK. For switches equipped with the enhanced network (ENET), this field contains subfields ENPAIR, ENSLOT, ENLINK, and CONTMARK. ***Note:*** Changes to fields with multiple entries should be made in the PROMPT mode only.
	NMNO	0-15	Network module number. Enter the network link where the SMA is assigned, corresponding to the C-side links 0-15 of the SMA.
	NMPAIR	0-31	Network module pair number. Enter the network link where the PM is assigned, corresponding to the provisioned C-side links of the PM.
Note: Memory is automatically allocated for a maximum of 128 tuples for table LTCINV.			

TR-303 Generic Interface (continued)

Datafilling table LTCINV (Sheet 3 of 4)

Field	Subfield or refinement	Entry	Explanation and action
	NMPORT	0-63	Network port number. Enter the network port corresponding to the preceding link.
	ENPAIR	0-3	ENET pair number. Enter the network link where the PM is assigned, corresponding to the provisioned C-side links of the PM.
	ENSLOT	9-32	ENET slot number. Enter the crosspoint slot number where the PM is assigned, corresponding to the provisioned C-side links of the PM.
	ENLINK	0-15	ENET link number. Enter the link on the crosspoint where the PM is assigned, corresponding to the provisioned C-side links of the PM.
	CONTMARK	+ or $	Continuation mark. Enter a plus sign (+) when the vector continues on the next line. Otherwise, enter a dollar sign ($) to end the vector.
OPTCARD		alphanumeric	Optional card. This is a vector of up to ten entries. For the SMA, slot 16 must be used for the ISP card. Slot 15 can only be used for the universal tone receiver (UTR) card. The CLASS modem resource (CMR) card can only be plugged in slot 17. Examples are UTR15, MSG6X69, CMR17 and ISP16. ***Note:*** Changes to fields with multiple entries should be made in the PROMPT mode only.
	CMRLOAD	alphanumeric	CLASS modem resource load. This is a vector of up to eight characters. Enter the CMR software load.
CONTMARK		+ or $	Continuation mark. Enter + when the vector continues on the next line. Otherwise, enter $ to end the vector.
TONESET		NORTHAM	Tone set. Enter the tone set appropriate for the switch being datafilled.
Note: Memory is automatically allocated for a maximum of 128 tuples for table LTCINV.			

Datafilling table LTCINV (Sheet 4 of 4)

Field	Subfield or refinement	Entry	Explanation and action
PECS6X45		AX74AA	6X45 equipment PECs. One PEC is required for each unit of the SMA. Enter the PEC for unit 0 first. The PEC datafilled for a unit must correspond to the minimum firmware capabilities in the processor complex of each unit. The PEC for the SMA is AX74AA.
E2LOAD		alphanumeric	Electrically erasable programmable read-only memory. Contains the name of the load file that is loaded in the NTAX74AA EEPROM.
OPTATTR		$	Optional attribute. This vector is datafilled for digital terminal controller (DTC) PMs only. Enter a $ to end the vector.
PEC6X40		6X40AA, AB, AC, AD, FA, or FB	6X40 equipment PEC. Enter the version to the 6X40 card in the peripheral. The default is 6X40AA. The value entered is displayed in error messages when a faulty card is detected.
Note: Memory is automatically allocated for a maximum of 128 tuples for table LTCINV.			

Datafill example for table LTCINV

The following example shows sample datafill for table LTCINV.

MAP display example for table LTCINV

```
LTCNAME
   ADNUM FRTYPE FRNO SHPOS FLOOR ROW  FRPOS EQPEC  LOAD
                                          EXECTAB
                                         CSLNKTAB
                                  OPTCARD
TONESET      PECS6X45   E2LOAD
                                  OPTATTR PEC6X40
-------------------------------------------------
SMA 0
     1000 LTEI  0   18     1    E    2 6X02TE XSC08BH
                                  (    POTS POTSEX) $
   (0 47) (0 55) (1 47) (1 55) (0 62)(1 62)(0 5)(1 5)$
          (ISP16) (MSG6X69) (CMR17) (CMR07A) $
NORTHAM    AX74AA  AX74AA AX74XE01
  6X40AC                                          $
```

TR-303 Generic Interface (continued)

Datafilling table CARRMTC

Table carrier maintenance (CARRMTC) allows the DMS SuperNode switch administration to datafill maintenance control information in peripherals, out-of-service limits for alarms, and system return-to-service occurrences.

Table CARRMTC contains the attributes of DS-1 links, such as the line coding and frame formats along with maintenance control information.

A carrier, by definition, maintains communication on links connecting DMS peripherals to channel banks, DMS peripherals to remote DMS peripherals, or remote to remote DMS peripherals.

Up to 16 entries exist in table CARRMTC for each type of peripheral capable of providing carrier links in the switch. These entries are used in field CARRIDX of table LTCPSINV when datafilling carriers.

The following checks are made between table CARRMTC and table LTCPSINV:

- When a carrier index (CARRIDX) is datafilled in table LTCPSINV, an entry for the PM type, in this case the SMA, must be present in table CARRMTC.
- When an entry is deleted from table CARRMTC, the entry cannot be referenced by any carriers in table LTCPSINV. Otherwise, the deletion command is rejected.
- When an existing entry in table CARRMTC is changed, table LTCPSINV is checked to determine if the entry is referenced by in-service carriers. If so, the change command is rejected, and a list of in-service carriers is displayed.

The DMS SuperNode switch adds the first tuple for SMA to table CARRMTC automatically during initial program load (IPL) or first restart after IPL. The entry is designated as index 0 and has the value DEFAULT in the TMPLTNM field, and default values for other fields.

This tuple cannot be deleted, and only fields ES, SES, and thresholds for frame and slip losses, can be changed. Tuples other than the default tuple must be added manually before they can be referenced in table LTCPSINV.

These tuples can be deleted only if no DS-1 carriers are associated with them. Tuples can be changed in table CARRMTC only if the associated DS-1 carriers are manually busy or offline.

TR-303 Generic Interface (continued)

The next table shows the datafill specific to TR-303 Generic Interface for table CARRMTC. Only those fields that apply directly to TR-303 Generic Interface are shown.

Datafilling table CARRMTC (Sheet 1 of 4)

Field	Subfield or refinement	Entry	Explanation and action
CSPMTYPE		SMA	C-side node PM type. Enter the PM type of the node on the C-side of the carrier link.
TMPLTNM		Default	Template name. Enter the template name (up to 16 characters) for the PM. This entry also appears in the field CARRIDX of table LTCPSINV. The default value is DEFAULT. ***Note:*** Datafill as NO_YELLOW_ALM to activate values in fields BEROL and BERML.
RTSML		0-255	Return to service maintenance limit. Enter the number of times within the audit interval, a carrier may be returned to service by the system before a warning is issued. Value 255 disables this feature.
RTSOL		0-255	Return to service out-of-service limit. Enter the number of times within the audit interval, a carrier may be returned to service by the system, before it is placed permanently out of service. Value 255 disables this feature.
CONTMARK		+	Continuation mark. Enter + for record to be continued on the next line.
ATTR		see subfield	Attribute. This field contains subfield SELECTOR.
	SELECTOR	DS1	Selector. Enter carrier type DS1.
	CARD	NT6X50AB	Card. Enter the product engineering code (PEC) of the DS-1 interface card used. The PEC for the DS1- interface card in the SMA is NT6X50AB. NT6X50AB provides 64 kb/s clear-channel capability required for MBS services operating in B8ZS mode.

TR-303 Generic Interface (continued)

Datafilling table CARRMTC (Sheet 2 of 4)

Field	Subfield or refinement	Entry	Explanation and action
	VOICELAW	MU_LAW	Voice law. Enter the voice law used in the carrier. A_LAW is used mainly in international switches. MU_LAW is used mainly in North American switches.
	FF	ESF	Frame format. Enter extended super frame format (ESF) in this field. The SMA-RDT subsystem uses a 24-frame format.
	ZLG	ZCS or B8ZS	Zero logic. Enter ZCS for zero code suppression. A byte of zeroes is transmitted with a 1 in the least significant bit position. This results in an incorrect transmission for data in the SMA-RDT subsystem, and causes minor noise for speech. ZCS precludes the use of integrated services digital network (ISDN). Enter B8ZS for bipolar 8-bit zero substitution. B8ZS is required for 64 kb/s clear-channel capability for ISDN services.
	BERB	CRC	Bit error rate base. Enter CRC for cyclic redundancy check violations. BER calculations based on CRCs detect problems on the entire DS-1 path.
	DLK	NILDL	Data link. Currently, only NILDL is supported.
	IAT	N	Inhibit alarm transmit. Enter N for the IAT field for the SMA-RDT configuration.
	LCGAST	250	Local carrier group alarm set threshold. Enter value for the threshold in units of 10 ms. Entry of 250 is recommended. The range is 0-9999.
	LCGACL	1000	Local carrier group alarm clear threshold. Enter value for the threshold in units of 10 ms. Entry of 1000 is recommended. The range is 0-9999.
	RCGAST	1000	Remote carrier group alarm set threshold. Enter value for the threshold in units of 10ms, in other words, the entry is multiplied by 10. This field is set to 1000 providing a threshold value of 10 000 ms or 10 s. This value overrides datafill. The range is 0-9999.

Datafilling table CARRMTC (Sheet 3 of 4)

Field	Subfield or refinement	Entry	Explanation and action
	RCGACL	1000	Remote carrier group alarm clear threshold. Enter value for the threshold in units of 10ms, in other words, the entry is multiplied by 10. This field is set to 1000 providing a threshold value of 10 000 ms or 10 s. This value overrides datafill. The range is 0-9999.
CONTMARK		+	Continuation mark. Enter plus sign (+) for record to be continued on the next line.
	AISST	1-9999	Alarm indication signal set threshold. Enter value for the threshold in units of 10 ms.
	AISCL	1-9999	Alarm indication signal clear threshold. Enter value for the threshold in units of 10 ms. The range is 1-9999.
	BEROL	3-6	Bit error rate out-of-service limit. Enter the bit error rate out-of-service limit expressed as the negative of the exponent of 10 (10E-n). For example, 3 represents a 1 in 1000 bit error rate. ***Note:*** If field TMPLTNM is datafilled as DEFAULT, the system sets this value to 3 and overrides datafill. If field TMPLTNM is datafilled as NO_YELLOW_ALM, this value is user-controlled for any value in the range.
	BERML	4-7	Bit error rate maintenance limit. Enter the bit error rate maintenance limit expressed as the negative of the exponent of 10 (10E-n). ***Note:*** If field TMPLTNM is datafilled as DEFAULT, the system sets this value to 6 and overrides datafill. If field TMPLTNM is datafilled as NO_YELLOW_ALM, this value is user-controlled for any value in the range.
	ES	0-9999	Error second threshold. Enter value for the threshold in units of 10 ms.
	SES	0-9999	Severe error second threshold. Enter value for the threshold in units of 10 ms.

TR-303 Generic Interface (continued)

Datafilling table CARRMTC (Sheet 4 of 4)

Field	Subfield or refinement	Entry	Explanation and action
	FRAMEML	0-9999	Frame maintenance limit. Enter the maintenance limit for frame loss.
	FRAMEOL	0-9999	Frame loss limit. Enter the out-of-service limit for frame loss. FRAMEOL should be larger than FRAMEML.
	SLIPML	0-9999	Slip maintenance limit. Enter the maintenance limit for slip.
	SLIPOL	0-9999	Slip out-of-service limit. Enter the out-of-service limit for slip. SLIPOL should be larger than SLIPML.

BpV handling

Bipolar violation (BpV) levels for the RDT are hard-coded in SMA software to be 1E-3 (a 1 in 1000 bit error rate) for the out-of-service limit and 1E-6 for the maintenance (MTC) limit.

When field TMPLTNM is datafilled as DEFAULT, RDT BpV levels are compared to these hard-coded values to determine if an alarm should be raised.

RDT BpV levels are user-controllable when field TMPLTNM is datafilled as NO_YELLOW_ALM. In this case, RDT BPV levels are compared with the values datafilled in fields BEROL and BERMN to determine if an alarm should be raised.

Datafill example for table CARRMTC

The following example shows sample datafill for table CARRMTC.

MAP display example for table CARRMTC

```
   CSPMTYPE   TMPLTNM RTSML RTSOL                ATTR
 ------------------------------------------------------
SMA DEFAULT 255 255 DS1 NT6X50AB MU_LAW ESF B8ZS CRC NILDL
N 250 1000 1000 1000 150 1000 3  6 864 100 17 511  4   255
```

Datafilling table PMLOADS

Table PMLOADS is used to store the device location of every PM load file. This permits the XPM automatic loading feature to locate load files without the intervention of operating company personnel.

Table PMLOADS lists the active and backup loadfiles. The active loadfile is always the default load used with the LOADPM command and most system activities. The backup loadfile is used if there is a problem in loading or returning to service the active loadfile. The backup loadfile is always the unpatched loadfile that Nortel shipped. The active and backup loadfiles are used when applying and removing patches.

Table PMLOADS stores data for

- the name of the active loadfile. This is the default load used with the LOADPM command and most system initiated activities
- the name of the backup loadfile. This is the load used if there is a problem in loading or returning to service the active loadfile. The backup loadfile is always the unpatched loadfile shipped with the SMA.
- the file locations.
- the update active loadfile field, which indicates if the site wants the active fileid updated automatically. The feature allows the patched loadfile to be loaded into the XPM should a reload be necessary which simplifies reload and recovery of the XPM. The active file information is updated through loadfile patching, if loadfile patching is enabled.

The active and backup files are used by the system as part of loading and recovery.

The XPM load files must be datafilled in table PMLOADS before they can be datafilled in table LTCINV. Table LTCINV enforces this rule.

Note: An exception to this rule occurs during initial datafill, and during dump and restore. During these times, tuples in table PMLOADS are automatically datafilled when LTCINV tuples are datafilled.

Pre-patched XPM loads

Pre-patched XPM loads background

Pre-patched XPM loads (PPXLs) are XPM loadfiles that contain corrective patches built into the loadfile. PPXLs are incremental loads built using patch updates. The patch updates were originally used to create patch files which have been released to the field. Hence there is no functional or technical difference between a regular XPM load with patches, versus a PPXL where the patches are incorporated into the load. In summary, PPXLs are analogous to CM loads that contain patches built in, based on date of shipment.

Implementation of PPXLs

At the beginning of each PPXL loadfile, there is a 1K data block containing the patch IDs for the patches included within the PPXL. Even though the patches

TR-303 Generic Interface (continued)

are built into the PPXL, the corresponding patch files for each patchid listed in the 1K data block must be present when the PPXL is datafilled in table PMLOADS.

When the PPXL is datafilled in table PMLOADS, the loadset is modified if one already exists for the base load, or the loadset is initially created if the base load is new to the DMS-100 switch.

> ***Note:*** Loadsets are used to group all peripheral units loaded with the same load together. To view all loadsets on the DMS-100 switch, access the PATCHER CI level and enter the following command string.**>INFORM PMALL**

After the PPXL is added to table PMLOADS, it can be loaded manually, or automatically, by the system recovery controller (SRC). When the PPXL is loaded, by either method, the patching performed after loading the PPXL is reduced, or eliminated entirely, because most or all of the patches are included in the load.

Once the PPXL is loaded, it can have additional patches applied or removed, exactly in the same fashion as a regular XPM load. Also, any patches built into the PPXL can be removed, as long as their corresponding patch files are present.

Any patches added or removed following loading of a PPXL are automatically applied or removed upon subsequent reloads of the PPXL.

PPXL Naming Convention

PPXL file names have "_<date>" appended to the end of their corresponding base load name. For example, a PPXL load file created for base load ECL03BX would be named ECL03BX_941129. The base load name, however, remains the same. Base loads can be identified as any load not having the _<date> suffix.

The inherent value becomes the preservation of the patch stream with the ability to up-issue a PPXL as required. A PPXL's vintage is identified using the date identifier.

PPXL storage requirements

When preparing to load PPXLs, operating companies are advised to double their XPM load storage requirements to accomodate PPXLs. PPXLs require the PPXL loadfile be stored on the ACTVOL device, and the base load file be stored on the BKPVOL device.

Loading a PPXL

There are two methods of adding PPXLs to an office. The first is for upgrading an office to a new base load lineup, that is, when the base loadname is not currently in table PMLOADS. The second method is for adding PPXLs to offices that already have the base loadname in table PMLOADS, for example, XSC08CJ (the existing loadname) is appended to XSC08CJ_970105 (the PPXL added to the baseload). The two methods follow:

Note 1: PPXLs are only supported on BCS36 or higher CM loads.

Note 2: PATCH JCK19 must be applied to the CM before continuing.

Upgrading the base load

To load a PPXL in an office where the baseload is new to the office, use the following procedure:

1 Copy the base loadfile and the PPXL loadfiles to the disk volumes to be used for PM loads.

Note: Both the base load and the PPXL load should be copied to two disk volumes for redundancy.

2 Copy the patches associated with the PPXL loads to the same disk volume used in the step 1. A list of patches associated with each PPXL load is included in the load tape shipment. After the PPXL file is present on disk, obtain a list of patches included in the PPXL by typing

```
>XPMLFP
```

and pressing the Enter key.

```
>PATCHLIST FILE ppxl_filename
```

and pressing the Enter key.

where

ppxl_filename
is the filename of the PPXL loaded added to the baseload

3 Add a new tuple for the base load to table PMLOADS. Enter the base load for the LOADNAME, the base loadname for the ACTFILE, and the base load name again for the BKPFILE.

4 Add the base loadname to the appropriate inventory table, for example LTCINV.

5 Edit the tuple added in step 3to change the ACTFILE field from the base loadfile name to the PPXL filename. See the datafill example in table PMLOADS for an example of this tuple.

6 Set the loadset against both units of the XPM by typing

```
>PATCHER
```

and pressing the Enter key.

```
>SET loadname PM pm_type device_no unit_no
```

TR-303 Generic Interface (continued)

and pressing the Enter key.

where

loadname
is the name of the loadfile

pm_type
is the type of PM requiring the loadset

device_no
is the device number with a range of 0-255

unit_no
is the unit number, 0 or 1

7 Load the PPXL into each unit of the XPM by typing

```
>BSY UNIT unit_no
```

and pressing the Enter key.

```
>LOADPM UNIT unit_no
```

and pressing the Enter key.

```
>RTS UNIT unit_no
```

and pressing the Enter key.

where

unit_no
is the unit number of the XPM to be loaded

8 Perform a warm SwAct of the XPM and repeat step 7.

Note 1: Once loaded, the XPM may have additional patches applied or removed in the same manner used with XPM loads in the past. Also, any patches built into the PPXL may be removed from the load as long as the actual patch file is present on disk.

Note 2: Any patches added or removed following loading of a PPXL are automatically applied or removed upon subsequent reloads of the PPXL.

Note 3: Non-PPXL patches are not removed when the PPXL is reloaded, because the removed patches are already out of the loadset.

Adding PPXLs to an existing PM load lineup

To add PPXLs to an existing XPM load lineup, use the following procedure:

1 Verify all patch_ids associated with the PPXL are present on the disk volume identified in table PMLOADS, field ACTVOL. If not present, copy the patches from tape to the correct volume. A list of the patches contained in each PPXL

is included with the PM tape shipment. Once the PPXLs are copied to disk, list the patches in the PPXL by typing

>XPMLFP

and pressing the Enter key.

>PATCHLIST FILE ppxl_filename

and pressing the Enter key.

where

ppxl_filename
is the filename of the PPXL loaded to disk

2 Copy the PPXL file (filename_date) to the disk volume used in step 7.

3 Copy the baseload to the disk volume identified in table PMLOADS, field BKPVOL.

4 Modify table PMLOADS as follows: If the XPM base loadname does not currently exist in table PMLOADS add a new tuple using the previous "Upgrading baseload lineup" procedure. Otherwise, change the ACTFILE field to the PPXL filename (filename_date). At this point the loadset is upgraded if one currently exists, or one is created if not.

5 Set the loadset against both units of the XPM by typing

>PATCHER

and pressing the Enter key.

>SET loadname PM pm_type device_no unit_no

and pressing the Enter key.

where

loadname
is the name of the loadfile

pm_type
is the type of PM requiring the loadset

device_no
is the device number with a range of 0-255

unit_no
is the unit number, 0 or 1

6 Each unit of the XPM may now be loaded with the PPXL by typing

>BSY UNIT unit_no

and pressing the Enter key.

>LOADPM UNIT unit_no

and pressing the Enter key.

>RTS UNIT unit_no

and pressing the Enter key.

where

unit_no
is the unit number of the XPM to be loaded

TR-303 Generic Interface (continued)

7 Perform a warm SwAct of the XPM and repeat step Section 6, "Each unit of the XPM may now be loaded with the PPXL by typing" on page -79.

Note 1: Once loaded, the XPM may have additional patches applied or removed in the same manner used with XPM loads in the past. Also, any patches built into the PPXL may be removed from the load as long as the actual patch file is present on disk.

Note 2: Any patches added or removed following loading of a PPXL are automatically applied or removed upon subsequently reloads of the PPXL.

The following table shows the datafill specific to TR-303 Generic Interface for table PMLOADS. Only those fields that apply directly to TR-303 Generic Interface are shown.

Datafilling table PMLOADS

Field	Subfield or refinement	Entry	Explanation and action
LOADNAME		alphanumeric	Peripheral module load name. Enter the XPM load file name. The range is up to eight characters.
ACTFILE		alphanumeric	Active load file name. The name of the active XPM loadfile. This could be the original loadfile or a patched loadfile (PPXL). Range is up to 32 characters.
ACTVOL		alphanumeric	Active volume. Identifies the device where the active loadfile is stored. Range is the set of disk drive unit (DDU) volumes and system load module (SLM) disks available to the CM (that is, S00DXPM). Range is up to 16 characters.
BKPFILE		alphanumeric	Backup load file name. Identifies the name of the backup XPM loadfile. It should be the same name as the LOADNAME field. Range is up to 32 characters
BKPVOL		alphanumeric	Backup volume. The device where the backup loadfile is stored. Range is the set of DDU volumes and SLM disks available to the CM (that is, S00DXPM). Range is up to 16 characters.
UPDACT		alphanumeric	Update active filename. Currently not used. The default value is N.

Datafill example for table PMLOADS

The following example shows sample datafill for table PMLOADS.

MAP display example for table PMLOADS

```
          LOADNAME
          ACTFILE     ACTVOL
          BKPFILE     BKPVOL       UPDACT
-------------------------------------------
          XSC08BH
 XSC08BH_970205       S01DXPM
          XSC08BH     S01DXPM      N
```

Datafilling table LTCPSINV

The line trunk controller P-side link inventory (LTCPSINV) table lists the following data assignment for each bay associated with a SMA unit:

- PM type and number
- port designation of the P-side links

The following table shows the datafill specific to TR-303 Generic Interface for table LTCPSINV. Only those fields that apply directly to TR-303 Generic Interface are shown.

Datafilling table LTCPSINV (Sheet 1 of 2)

Field	Subfield or refinement	Entry	Explanation and action
LTCNAME		see subfields	Line trunk controller name. This field contains subfields XPMTYPE and XPMNO.
	XPMTYPE	SMA	Peripheral module type. Enter the type of PM. This entry must match what is in LTCINV.
	XPMNO	0-255	Peripheral module number.
PSLNKTAB		see subfields	P-side link table. This field contains subfields PSLINK, PSDATA, AREASELCT, CARRIDX, ACTION, and CONTMARK. Vector from 0-19. ***Note:*** Changes to fields with multiple entries should be made in the PROMPT mode only.
	PSLINK	0-19	P-side link. Enter the P-side port number.
	PSDATA	see subfield	P-side data. Consists of subfield AREASELCT.
Note: Memory is automatically allocated for a maximum of 128 tuples for table LTCPSINV.			

TR-303 Generic Interface (continued)

Datafilling table LTCPSINV (Sheet 2 of 2)

Field	Subfield or refinement	Entry	Explanation and action
	AREASELCT	DS1	Area select. DS1 is entered for DS-1 type interface cards.
	CARRIDX	DEFAULT	Carrier index. Enter the same value for the template name in table CARRMTC. The default value is DEFAULT. The range is NO_YELLOW_ALM, SFB8ZS, ESFB8ZS, ESFZCS or DEFAULT.
	ACTION	Y or N	Action. Enter Y if the carrier should be removed from service when the out-of-service limit for frame, slip, errored-second, or severe errored-second is exceeded. Otherwise, enter N.
	CONTMARK	+ or $	Continuation mark. Enter + when the vector continues on the next line. Otherwise, enter $ to end the vector.
Note: Memory is automatically allocated for a maximum of 128 tuples for table LTCPSINV.			

Datafill example for table LTCPSINV

The following example shows sample datafill for table LTCPSINV.

MAP display example for table LTCPSINV

```
LTCNAME                                                PSLNKTAB
-------------------------------------------------------------
 SMA  0
  (0 DS1 DEFAULT   N) (1 DS1 DEFAULT N)
  (2 DS1 DEFAULT N) (3 DS1 DEFAULT N) (4 DS1 DEFAULT N)
  (5 DS1 DEFAULT N) (6 DS1 DEFAULT N) (7 DS1 DEFAULT N)
  (8 DS1 DEFAULT N) (9 DS1 DEFAULT N) (10 DS1 DEFAULT N)
  (11 NILTYPE ) (12 NILTYPE ) (13 NILTYPE ) (14 NILTYPE)
  (15 NILTYPE ) (16 NILTYPE ) (17 NILTYPE) (18 NILTYPE )
  (19 NILTYPE )$
```

Datafilling table ALMSCGRP

The alarm scan group (ALMSCGRP) table records the circuit equipment, location, and type of circuit card containing scan points.

The following table shows the datafill specific to TR-303 Generic Interface for table ALMSCGRP. Only those fields that apply directly to TR-303 Generic Interface are shown.

Datafilling table ALMSCGRP

Field	Subfield or refinement	Entry	Explanation and action
SCGROUP		0-255	Scan group. Enter the scan group number.
TMTYPE		alphanumeric	Trunk module type. Enter the type of trunk module where the circuit is mounted.
TMNO		0-255	Trunk module number. Enter the number of the trunk module where the circuit is mounted.
TMCKTNO		0-23	Trunk module circuit number. Enter the trunk module circuit number where the circuit is assigned.
CARDCODE		alphanumeric	Card code. Enter the PEC of the alarm card.

Datafill example for table ALMSCGRP

The following example shows sample datafill for table ALMSCGRP.

MAP display example for table ALMSCGRP

```
SCGROUP  TMTYPE  TMNO  TMCKTNO  CARDCODE
-----------------------------------------
      0     MTM     1        1    3X82AA
      1     MTM     3        1    3X82AA
      2     MTM     1        7    3X84AA
      3     MTM     1       10    0X10AA
      .       .     .        .       .
      .       .     .        .       .
     15     RSM     1        7    0X10AA
      .       .     .        .       .
      .       .     .        .       .
     21     RMM     2       11    0X10AA
```

Datafilling table ALMSDGRP

Table alarm signal distributor group (ALMSDGRP) records the circuit equipment, location and type of circuit card containing signal distributor points.

TR-303 Generic Interface (continued)

The following table shows the datafill specific to TR-303 Generic Interface for table ALMSDGRP. Only those fields that apply directly to TR-303 Generic Interface are shown.

Datafilling table ALMSDGRP

Field	Subfield or refinement	Entry	Explanation and action
SDGRP		0-255	Signal distributor group. Enter the signal distributor group number.
TMTYPE		alphanumeric	Trunk module type. Enter the type of trunk module where the circuit is mounted.
TMNO		0-255	Trunk module number. Enter the number of the trunk module where the circuit is mounted.
TMCKTNO		0-23	Trunk module circuit number. Enter the trunk module circuit number where the circuit is assigned.
CARDCODE		alphanumeric	Card code. Enter the PEC of the alarm card.

Datafill example for table ALMSDGRP

The following example shows sample datafill for table ALMSDGRP.

MAP display example for table ALMSDGRP

```
SDGROUP TMTYPE TMNO TMCKTNO CARDCODE
-----------------------------------
      0    MTM    1       0   3X82AA
      1    MTM    3       0   3X82AA
      2    MTM    1       6   3X84AA
      4    MTM    1       4   2X57AA
      5    MTM    1       5   2X57AA
      6    MTM    1      18   2X57AA
      7    MTM    1      19   2X57AA
      8    MTM    6      18   2X57AA
      .      .    .       .      .
     22    MTM   12      18   2X57AA
     23    MTM   12      19   2X57AA
```

Datafilling table ALMSC

The alarm scan (ALMSC) table associates a scan point function with an actual scan point and specifies which SD points should be operated when that scan point is activated.

The LOGIC field for the RDTALRMCO SC point function should always be Y. This indicates the functionality is fixed (in the software) and is not datafilled.

The SCGROUPs must be datafilled in table ALMSCGRP before datafilling scan points. The value for field SCGROUP must be 4 or higher. Although 1 through 3 are valid entries, these numbers are reserved for DMS system scan alarms such as common audible fail and office alarm unit fail.

The following table shows the datafill specific to TR-303 Generic Interface for table ALMSC. Only those fields that apply directly to TR-303 Generic Interface are shown.

Datafilling table ALMSC (Sheet 1 of 2)

Field	Subfield or refinement	Entry	Explanation and action
FUNCTION		alphanumeric	Function. Enter the alarm function.
SCGROUP		0-255	Scan group. Enter the scan group where the scan point belongs.
POINT		0-6	Scan point. Enter the scan point number within the scan group.
NORMALST		0-1	Normal state. Enter the normal state of the scan point. Entry values are 0 (if the scan point is normally off or open) and 1 (if the scan point is normally on or closed).
REPORT		Y or N	Report. Enter Y if an alarm report is to be logged. Otherwise, enter N.
ALM		CR, MJ, MN, or NA	Alarm. Enter the type of alarm to be activated. Entry values are CR (critical alarm), MJ (major alarm), MN (minor alarm), and NA (no alarm).
LOGIC		see subfields	Logic. This field consists of subfields LOGIC, SDFUNCT, ALMGRP, ALMXFR, and CONTMARK.
	LOGIC	Y or N	Logic. Enter Y if the logic associated with the function is fixed. Otherwise enter N.
	SDFUNCT	alphanumeric	Signal distributor function. Enter the signal distributor function or functions associated with a specific scan point.

TR-303 Generic Interface (continued)

Datafilling table ALMSC (Sheet 2 of 2)

Field	Subfield or refinement	Entry	Explanation and action
	ALMGRP	Y or N	Alarm grouping. Enter Y if the alarm function is to be implemented when the alarm grouping key is activated. Enter N if the alarm function is to be implemented at all times, regardless of the alarm grouping key.
	ALMXFR	Y or N	Alarm transfer. Enter Y if the alarm function is to be implemented when the alarm transfer key is activated. Otherwise enter N.
	CONTMARK	+ or $	Continuation mark. Where the record is other than the last for a specific scan point, enter +, which indicates that additional data for the scan point is specified in the next record. Where the record is the last for a specific scan point, enter a dollar sign ($).

Datafill example for table ALMSC

The following example shows sample datafill for table ALMSC.

MAP display example for table ALMSC

```
FUNCTION SCGROUP POINT NORMALST REPORT ALM     LOGIC
-------------------------------------------------------
RDTALRMCO      4     1        0     N   NA       Y $
```

Datafilling table ALMSD

Table alarm signal distributor point (ALMSD) associates a SD point function with an actual SD point. Of the 13 SD point functions, eight are used as indicators, as to which RDT is raising a particular alarm, and three are used as indicators as to the severity of the alarm being raised.

There is a one-to-one relationship between the eight functions and the eight possible enumerated “Which SD" SD points in the SDPOINTS field of table RDTINV.

The AUDIBLE field should always contain an N for the SD points associated with RDT alarms. The table control system enforces this requirement. A Y in this field indicates, an audible alarm cutoff switch should turn the SD points off. This should not be the case for RDT SD points.

TR-303 Generic Interface (continued)

The SDGROUPS must be datafilled in table ALMSDGRP before datafilling SD points. The value for field SDGROUP must be 4 or higher. Though 1 through 3 are valid entries, these numbers are reserved for DMS switch alarms such as alarm battery MTM fail.

SD points are electrical relays controlled by DMS switch software. These relays are usually connected to lights, bells, or remote telemetry monitoring devices. To activate SD points in response to RDT alarms, severity-indicating SD points must be datafilled in table ALMSD.

These severity-indicating SD points are the following:

- RDTCRIT—operated when critical alarms are present at a RDT
- RDTMAJOR—operated when major alarms are present at a RDT
- RDTMINOR—operated when minor alarms are present at a RDT

Eight SD point functions are reserved for use by RDT alarm handling software to indicate which RDT has an alarm. These “Which-RDT" SD point functions are RDTSD1 through RDTSD8.

The SD points are used to indicate which RDT has the alarms shown by the severity-indicating SD points. Each RDT can be set to activate a unique combination of SD points by datafilling the combination in field SDPOINTS in table RDTINV.

Additional SD point functions now exist; RDTACO and RDTWARN. When RDTACO is active, it indicates there are active RDT alarms not displayed, because the alarm cutoff function is enabled.

RDTWARN is activated by software alarm RDTWRN. RDTWRN is similar to software alarms RDTCRT, RDTMJ, and RDTMN. RDTWARN is automatically datafilled in table SFWALARM during initial program load, and is set to activate by default.

Once datafilled, RDTWARN *cannot* be deleted from table ALMSD, unless it is first removed from the logic of table SFWALARM. RDTWARN indicates the presence of warning level alarms at the RDT RDTWARN is similar to other severity-indicating RDT SD points: RDTCRIT, RDTMAJOR and RDTMINOR. .

Note: RDTACO and RDTWARN are optional. They do not need to be datafilled before SD points are datafilled in table RDTINV.

TR-303 Generic Interface (continued)

SD points RDTACO and RDTWARN can only be datafilled if there are available circuits on SD circuit cards NT2X57.

The following table shows datafill specific to TR-303 Generic Interface for table ALMSD. Only those fields that apply directly to TR-303 Generic Interface are shown.

Datafilling table ALMSD

Field	Subfield or refinement	Entry	Explanation and action
FUNCTION		alphanumeric	Function. Enter the alarm function. The entry is alphanumeric, up to 16 characters. RDTACO and RDTWARN are new functions.
SDGROUP		0-255	Signal distributor group. Enter the signal distributor group where the SD point belongs. For SD points RDTACO and RDTWARN, SDGROUP should be 4 or higher. 0-3 are reserved for system alarms.
POINT		0-7	Signal distributor point. Enter the SD point number within the signal distributor group.
NORMALST		0-1	Normal state. Enter the normal state of the SD point. Entry values are 0 (if the SD point is off, or open, normally) and 1 (if the SD point is on, or closed, normally). For RDTACO and RDTWARN SD points, 0 is appropriate.
AUDIBLE		Y or N	Audible. Enter Y if the signal distributor point is to be reset when the audible alarm reset key is operated. Otherwise, enter N. RDTACO and RDTWARN SD points are not allowed to be audible. Only N is acceptable for these values.
LAMPTEST		Y or N	Lamp test. Enter Y if the SD point is to be included in the lamp test. Otherwise, enter N.

Datafill example for table ALMSD

The following example shows sample datafill for table ALMSD.

MAP display example for table ALMSD

```
FUNCTION SDGROUP POINT NORMALST AUDIBLE LAMPTEST
-----------------------------------------------
RDTSD1        4      1        0       N        Y
RDTSD2        4      2        0       N        Y
RDTSD8        4      3        0       N        Y
RDTACO        4      4        0       N        Y
RDTWARN       4      5        0       N        Y
```

Datafilling table DCHINV

The D-channel handler inventory (DCHINV) table describes the physical, service, and channel allocation characteristics of enhanced D-channel handlers provisioned in the SMA. The inventory information includes the following:

- DCH identification number
- type and number of the host PM
- product equipment code of the DCH
- load file name of the DCH
- port used by the DCH

The following table shows the datafill specific to TR-303 Generic Interface for table DCHINV. Only those fields that apply directly to TR-303 Generic Interface are shown.

Datafilling table DCHINV (Sheet 1 of 2)

Field	Subfield or refinement	Entry	Explanation and action
DCHNO		0-255	D-channel handler number. Enter the external identification number used by the system to represent a specific D-channel handler.
PMTYPE		SMA	Peripheral module type. Enter the PM type where the DCH is located.
PMNO		0-255	Peripheral module number. Enter the PM number of the SMA in which the DCH is located.
DCHPEC		NTBX02BA	DCH product engineering code. Enter the PEC of the DCH card. For SMA, enter NTBX02BA.

TR-303 Generic Interface (continued)

Datafilling table DCHINV (Sheet 2 of 2)

Field	Subfield or refinement	Entry	Explanation and action
LOAD		alphanumeric	Load file name. Enter the DCH load name.
PORT		0-19	DS1 port. Enter the DS-1 port number used by the DCH. ***Note:*** DCH ports are datafilled sequentially beginning with port 19 and working backwards, using the odd-numbered ports.

Datafill example for table DCHINV

The following example shows sample datafill for table DCHINV.

MAP display example for table DCHINV

```
DCHNO     PMTYPE PMNO     DCHPEC      LOAD      PORT
-------------------------------------------------------
0     SMA      0       BX02BA     EDH08BA    17
1     SMA      0       BX02BA     EDH08BA    19
```

Datafilling table ISGDEF

The ISDN service group definition (ISGDEF) table contains information on ISG numbers, the PM type, the services provided, and the allocation of services channels.

The following table shows the datafill specific to TR-303 Generic Interface for table ISGDEF. Only those fields that apply directly to TR-303 Generic Interface are shown.

Datafilling table ISGDEF (Sheet 1 of 2)

Field	Subfield or refinement	Entry	Explanation and action
ISGNO		0-255	ISDN service group number. Enter the identification number used to assign the D-channel to a DCH.
PMTYPE		SMA	Peripheral module type. Enter the PM that supports DCH services.

Datafilling table ISGDEF (Sheet 2 of 2)

Field	Subfield or refinement	Entry	Explanation and action
PMNO		0-255	Peripheral module number. Enter the PM number of the SMA where the DCH is located.
SERVICE		BRA or PD	Enter the services provided by the ISDN service group. Up to three entries are allowed; use a $ sign to terminate this field if fewer than three entries are made.
CHNLTAB		see subfields	Channel information. This field is a vector with up to 32 entries specifying the functions of each channel. It is comprised of subfields DCHNL and CHNLTYPE. Use a dollar sign ($) sign to terminate this field if fewer than 32 entries are made. ***Note:*** All BD channels must be assigned in descending order starting at 31, while BRA channels are assigned in ascending order starting at 0. Therefore, the order of datafill for BD and BRA channels is restricted as follows: For one night process (ONP), the warning message "`BD channels must be higher than any BRA channels`" is displayed to inform operating company personnel of the incorrect data ordering in the tuple transferred. However, the tuple is accepted by the table on the new side. For non-ONP, the error message "`BD channels must be higher than any BRA channels`" is displayed to inform operating company personnel of the incorrect data ordering in the tuple and the tuple is rejected.
	DCHNL	0-31	D-channel. Enter the external identifier for the D-channel.
	CHTYPE	see subfield	Channel type. This field consists of subfield CHNLTYPE and refinements.
	CHNL-TYPE	NIL, RESERVED, BRA or BD	Channel type. Enter the service the D-channel provides.

TR-303 Generic Interface (continued)

Datafill example for table ISGDEF

The following example shows sample datafill for table ISGDEF.

MAP display example for table ISGDEF

```
ISGNO  PMYTPE  PMNO  SERVICE
                                                  CHNLTAB
_____________________________________________________
3       SMA     5     (BRA)$
  (0 RESERVED ) (1 BRA) (2 BRA) (3 BRA) (4 BRA) (5 BRA)
(6 BRA) (7 BRA) (8 BRA) (9 BRA) (10 BRA) (11 BRA)
(12 BRA) (13 BRA) (14 BRA) (15 BRA) (16 BRA) (17 BRA)
(18 BRA) (19 BRA) (20 BRA) (21 BRA) (22 BRA) (23 BRA)
(24 BRA) (25 BRA) (26 BRA) (27 BRA) (28 BRA) (29 BRA)
(30 BD) (31 BD) $
```

Datafilling table LTGRP

Table logical terminal group (LTGRP) defines up to 32 logical terminal groups. One group is permanently defined as ISDN and cannot be deleted.

Other group names may be defined in alpha-numeric combinations of eight characters. Each group supports up to 1022 logical terminal identifiers for a table total of up to 32,704 logical terminal identifiers (32 x 1022).

Note: A logical terminal group must be entered in this table before logical terminals can be specified in other tables.

The following table shows the datafill specific to TR-303 Generic Interface for table LTGRP. Only those fields that apply directly to TR-303 Generic Interface are shown.

Datafilling table LTGRP (Sheet 1 of 2)

Field	Subfield or refinement	Entry	Explanation and action
GROUP		alphanumeric	Logical terminal group. Enter the name of the logical group of terminals.

Datafilling table LTGRP (Sheet 2 of 2)

Field	Subfield or refinement	Entry	Explanation and action
GROUPNO		0-31	Group number. Enter a number that corresponds to the group name. The default number for logical terminal group ISDN is 0. For data packet network terminal groups, enter a number between 1-15.
OPTIONS		SAPI16 or $	Options. Enter SAPI16 for packet or circuit switched terminals. If the SAPI16 option is not specified, no packet-switched terminals can be datafilled for the group.

Datafill example for table LTGRP

The following example shows sample datafill for table LTGRP.

MAP display example for table LTGRP

```
GROUP  GROUPNO                              OPTIONS
-------------------------------------------------------------
ISDN       0                                 (SAPI16)
SMA        1                                 (SAPI16)
```

Datafilling table LTDEF

Table logical terminal definition (LTDEF) defines logical terminals and terminal access privileges. The following access privileges can be assigned to a logical terminal:

- voice and circuit-switched data on a B-channel (B)
- low-speed packet-switched data on a D-channel (D)
- high-speed packet data on a B-channel (PB)
- combined circuit-switched and D-channel packet data (BD)
- 2-B circuit switching (2B)

TR-303 Generic Interface (continued)

The following table shows the datafill specific to TR-303 Generic Interface for table LTDEF. Only those fields that apply directly to TR-303 Generic Interface are shown.

Datafilling table LTDEF (Sheet 1 of 2)

Field	Subfield or refinement	Entry	Explanation and action
LTKEY		see subfields	Logical terminal key.
	LTGRP	alphanumeric	Logical terminal group. Enter the logical terminal group. The group ISDN is already defined.
	LTNUM	0-1022	Logical terminal number. Enter a logical terminal number.
LTAP		B, D, BD, PB 2B	Logical terminal access privilege. Enter one of the following access privileges: B for circuit-switching, D for D-channel packet-switching, BD for combined circuit-switching and D-channel packet-switching, PB for B-channel packet switching, or 2B for 2B circuit switching. ***Note:*** BD is used for functional sets. B is used for ISDN Meridian feature transparency (MFT).
LTCLASS		BRAFS, or BRAMFT	Logical terminal class of service. Enter a set of services allowed for the logical terminal. Range is BRAFS for BRA functional sets, and BRAMFT for functional terminals.
	OPTION	see list of options	This field contains a list of options that are assigned, based on the value given to the field LTCLASS. The BRAFS options are SPIDSFX, CACH, DEFLTERM, NOVOICE, NOVBD, NOCMD, NOPMD, DTEI, SPIDSPX, EKTS, PVC, UATEI, and UNATEI. The BRAMFT options are DTEI, SPIDSFX, UATEI, and PVC.
		CACH	Call appearance handling feature. Enter CACH to enable CACH. Datafill EKTS if datafilling this option.
		EKTS	Electronic key telephone service. Enter EKTS to indicate electronic key telephone service.

Datafilling table LTDEF (Sheet 2 of 2)

Field	Subfield or refinement	Entry	Explanation and action
		NOCMD	No circuit mode data calls. Enter NOCMD if circuit mode data calls are disallowed.
		DEFLTERM	Default logical terminal. If a phone has a default service profile, and consequently does not require a service profile to be downloaded, enter DEFLTERM (for example, for a non-initializing terminal).
		NOPMD	No packet mode data calls. Enter NOPMD if packet mode data calls are disallowed.
		NOVBD	No voice band data calls. Enter NOVBD if voice band data calls are disallowed.
		NOVOICE	No voice calls. Enter NOVOICE if voice calls are disallowed.
	SPIDSFX	see subfield	Service profile identifier suffix. This field consists of subfield SPID_SUFFIX.
	SPID-SUFFIX	numeric	Service profile identifier suffix. Enter a name that uniquely identifies the subscriber on a dynamic terminal endpoint identifier (TEI) terminal.
		DTEI	Dynamic terminal endpoint identifier. Enter DTEI. An entry in this field is required if subfield SPIDSFX is datafilled.
	PVC	see subfields	Protocol version control. This field consists of subfields VERSION and ISSUE.
	VERSION	FUNCTIONAL	Protocol version. Enter the protocol version.
	ISSUE	0 or 1	Protocol issue. Enter the protocol issue designated for the specified logical terminal. Enter 0 for stimulus and MFT protocols, or 1 for BellCore functional protocol.
		UATEI	User-assigned terminal endpoint identifier. Enter the dynamic user-assigned terminal endpoint identifier if required.

TR-303 Generic Interface (continued)

Datafill example for table LTDEF

The following example shows sample datafill for table LTDEF.

MAP display example for table LTDEF

```
LYKEY     LTAP                                    CLASSREF
-------------------------------------------------------------
SMA         B
BRAFS     (NOPMD)    (PVC FUNCTIONAL 0)     $
```

Datafilling table SPECCONN

Table special connection (SPECCONN) sets up special-service connections that require dedicated nailed-up connections through the DMS SuperNode switch. Operating company personnel use software, and not hard-wired connections, to set-up and maintain special-service connections. After the connection is set-up, the connection remains until operating company personnel remove the connection from table SPECCONN.

Datafill for TR-303 Generic Interface for table SPECCONN appear in the following table. Fields that apply directly to TR-303 Generic Interface appear in the table.

Datafilling table SPECCONN (Sheet 1 of 4)

Field	Subfield or refinement	Entry	Description
ENDPT1		refer to subfield	Endpoint 1. Endpoint 1 is specified in subfield SCSEL.
	SCSEL	DS1, ISLC or DCHCHNL	Special connection selector. Enter the type of selector for endpoints.
	DCHCHNL	refer to subfields	DCH channel. Refer to subfields ISGNO and CHNL.
	ISGNO	0 to 255	D-channel handler number. Enter the D-channel handler identifier.
	CHNL	0 to 31	Channel number. Enter the D-channel on the D-channel handler.
	DS1	refer to subfields	DS1. Refer to subfields PMTYPE, SMANO, SMACKTNO, and SMACKTTS.
	PMTYPE	SMA	Peripheral module type. Enter the type of PM.

Datafilling table SPECCONN (Sheet 2 of 4)

Field	Subfield or refinement	Entry	Description
	SMANO	0-511	SMA number. Enter the external number of the SMA.
	SMACKTNO	0-19	SMA circuit number. Enter the P-side port number on the SMA.
	SMACKTTS	1 -24	SMA time slot. Enter the time slot (channel) on the DS-1.
	ISLC	refer to subfields	ISDN line card. Refer to subfields LEN, and CHANNEL.
	LEN	refer to subfields	Line equipment number. This field contains subfields: SITE, RDTFRAME, RDTUNIT, RDTSHELF, and RDTSLOT.
	SITE	alphanumeric	Site. Enter the location of the RDT (4-character alphanumeric). This entry is not optional. A default value is not assigned to this entry.
	RDT FRAME	0-511	RDT frame. Enter the RDT frame number, which is not a physical frame but a software entity. This software entity represents the group to which the RDT belongs at the site.
	RDT UNIT	0-9	RDT unit. Enter the number that represents the RDT unit in the group.
	RDT SHELF	0-20	RDT shelf. Enter the shelf number where the RDT resides. For GENTMC signaling, the range is between 0 and 20, to the maximum that table RDTINV defines. The size of RDT entered determines the maximum.
	RDT SLOT	1-99	RDT slot. Enter the slot number where the RDT resides. For GENTMC signaling, the range is between 0 and 99, to the maximum that table RDTINV defines. The size of RDT entered determines the maximum.
CHNL		B1 or B2	Channel. Enter the ISDN line card channel.
CONTYPE		CAB, CON, or PEND	Connection type. Enter CAB of A-bit and b-bit signaling connected, CON for connected, or PEND for pending.

TR-303 Generic Interface (continued)

Datafilling table SPECCONN (Sheet 3 of 4)

Field	Subfield or refinement	Entry	Description
STATUS		ACTIVE	Connection status. Enter the status of the connection.
ENDPT2		refer to subfield	Endpoint 2. Endpoint 2 is specified in subfield SCSEL.
	SCSEL	DS1, ISLC or DCHCHNL	Special connection selector. Enter the type of selector for endpoints.
	DCHCHNL	refer to subfields	DCH channel. Refer to subfields ISGNO and CHNL.
	ISGNO	0 to 255	D-channel handler number. Enter the D-channel handler identifier.
	CHNL	0 to 31	Channel number. Enter the D-channel on the D-channel handler.
	DS1	refer to subfields	DS1. See subfields PMTYPE, SMANO, SMACKTNO, and SMACKTTS.
	PMTYPE	SMA	Peripheral module type. Enter the type of PM.
	SMANO	0-511	SMA number. Enter the external number of the SMA.
	SMACKTNO	0-19	SMA circuit number. Enter the P-side port number on the SMA.
	SMACKTTS	1 -24	SMA time slot. Enter the time slot (channel) on the DS-1.
	ISLC	refer to subfields	ISDN line card. Refer to subfields LEN, and CHANNEL.
	LEN	refer to subfields	Line equipment number. This field contains the following subfields: SITE, RDTFRAME, RDTUNIT, RDTSHELF, and RDTSLOT.
	SITE	alphanumeric	Site. Enter the location of the RDT (four-character alphanumeric). This entry is not optional. A default value is not assigned assigned to the entry.

Datafilling table SPECCONN (Sheet 4 of 4)

Field	Subfield or refinement	Entry	Description
	RDT FRAME	0-511	RDT frame. Enter the RDT frame number, which is not a physical frame but a software entity. This software entry represents the group to which the RDT belongs at the site.
	RDT UNIT	0-9	RDT unit. Enter the number that represents the RDT unit in the group.
	RDT SHELF	0-20	RDT shelf. Enter the shelf number where the RDT resides. For GENTMC signaling, the range is between 0 and 20, to the maximum that table RDTINV defines. The size of RDT entered determines the maximum.
	RDT SLOT	1-99	RDT slot. Enter the slot number where the RDT resides. For GENTMC signaling, the range is between 0 and 99, to the maximum that table RDTINV defines. The size of RDT entered determines the maximum.
CHNL		B1 or B2	Channel. Enter the ISDN line card channel.
CONTYPE		CAB, CON, or PEND	Connection type. Enter CAB of A-bit and b-bit signaling connected, CON for connected, or PEND for pending.
STATUS		ACTIVE	Connection status. Enter the status of the connection.

Datafill example for table SPECCONN

Sample datafill for table SPECCONN appear in the following example.

MAP example for table SPECCONN

```
 FIELD   NAME          FIELD       VALUE
_____________________________________________________________

DSHCHNL 1 28 DSI SMA2 0 0 1 CON ACTIVE
 DSHCHNL 1 29 DSI SMA2 0 0 2 CON ACTIVE
ISLC RDT1 1 0 0 16 B1 DSI SMA2 0 1 9 CON ACTIVE
ISLC RDT1 1 0 0 18 B2 DSI SMA2 0 1 10CON ACTIVE
```

TR-303 Generic Interface (continued)

Datafilling table RDTINV

The remote digital terminal inventory (RDTINV) table contains inventory data. These data include RDTs and the corresponding IDTs, in the DMS-100 switching office. This table also contains the C-side connectivity information and RDT configuration information.

If ISDN is provisioned, a maximum of five RDTs can associate with one SMA. When you add an RDT to table RDTINV, DMS SuperNode switch software creates a corresponding IDT in the SMA.

When you delete an RDT from table RDTINV, the DMS software deletes the corresponding IDT. Table RDTINV creates an RDT as a remote to the DMS-100 switch and defines the attributes of the RDT.

Changing the line capacity of an RDT

Issues that affect a line capacity change for an RDT

Terminal numbers on an RDT must be contiguous. Addition and deletion of RDTs can divide the available area in many small spaces. This division can prevent the addition of an RDT because the spaces are not contiguous. Division does not always prevent the addition of an RDT. Small changes in line size can require that you offline an SMA to recover divided space.

> ***Note:*** When you increase the line capacity of an RDT by less than 96 lines, a warning message appears at the MAP terminal. This message informs operating company personnel to not perform this action because small increments can cause division.

Make line size changes to RDTs subtending the SMA in increases of 96. This action precludes fragmentation of the terminal identifier (TID) numbers in the TID table.

Do not make changes to other fields in table RDTINV while you make changes to the MAXLINES field. If you attempt other changes to table RDTINV while you change MAXLINES, an error message appears at the MAP terminal. This message informs operating company personnel not to change field MAXLINES while personnel change other fields.

Before you change the line capacity of an RDT, enter the RESOURCE command at the IDT level. Enter this command to display the number of lines that the system allocates to an SMA. Enter this command to display the number of lines on the posted IDT.

Increasing the line capacity of an RDT

If you increase the line capacity of an RDT, make the SMA that connects the RDT to the SuperNode switch manually busy (ManB). Use the command string BSY PM FORCE to make the SMA manually busy. Attempts to increase the line capacity of an RDT in another state result in an error message. This message appears at the MAP terminal. This message informs operating company personnel that the SMA must be ManB or offline to change field MAXLINES.

ATTENTION

Use the command string BSY PM FORCE to increase line capacity. Increase the line capacity of an RDT during periods of low traffic. The system can drop active calls and the SuperNode switch views the RDTs that connect to the SMA as CBsy.

Two methods are available to increase the line capacity of an MVI RDT. The first method requires operating company personnel to use two MAP terminals. The second method requires operating company personnel to prepare a read (store) file. This file groups the actions in the first method. The system executes the read file as a single activity. The system eliminates the normal delays that manual entry of the commands imposes.

Method 1 consists of the following steps and requires operating company personnel to control two MAP windows.

Note: Operating company personnel must have the two MAP terminals available and pre-type as possible. Personnel must perform these actions to reduce the time required to increase the line capacity of an RDT. Personnel can pre-type in table RDTINV to the point of the addition of the data from steps and .

Method 1 for increasing the line capacity of an MVI RDT - using two MAP windows

To increase the line capacity of an MVI RDT, perform the following steps.

At MAP terminal 1

1 To post the SMA that connects to the RDT to be upsized, type

```
>MAPCI;MTC;PM;POST SMA sma_no
```

and press the Enter key.

where

sma_no
is the number of the SMA to be posted.

TR-303 Generic Interface (continued)

At MAP terminal 2

2 To position on the affected RDT in table RDTINV, type

>TABLE RDTINV;FORMAT PACK;POS rdtname

and press the Enter key.

where

rdtname
contains the site, frame, and unit number of the RDT entered in table RDTINV, for example, RDT1 0 0

3 To change the value of subfield MAXLINES, type

>CHA VARTYPE

and press the Enter key.

Respond to the MAP terminal response as follows:

>RDTVAR

Press the Enter key.

>RDTPPLNK

Press the Enter key.

>MAXLINES

To respond to the MAP terminal response, enter the new MAXLINES value

>newmaxlines value

and press the Enter key.

where

newmaxlines value
is the new RDT line size you must enter in table RDTINV, field MAXLINES.

To respond to the MAP terminal response, perform the following steps.

>INHLINE

Press the Enter key.

>BRIDGING

Press the Enter key.

Note: Do not respond to the request to confirm until directed to respond in step Section 5, "Make sure step Section 4, "To busy the SMA, type" on page -102 at MAP terminal 1 is complete before you proceed with this step. Respond Y to confirm the change to MAXLINES. To respond, type" on page -103.

At MAP terminal 1

4 To busy the SMA, type

>BSY PM FORCE

and press the Enter key.

The following confirmation message appears:

```
This action will take this pm and all of its subtending
nodes out of servicePlease confirm (“Yes", “Y", “No", or
“N"):
```

to continue, respond to this message. To respond to this message, type

>Y

and press the Enter key.

Note: At this point the SMA is ManB. The system takes down calls that are active on RDTs and a power failure occurs.

```
At MAP terminal 2
```

5 Make sure step Section 4, "To busy the SMA, type" on page -102 at MAP terminal 1 is complete before you proceed with this step. Respond Y to confirm the change to MAXLINES. To respond, type

>Y

and press the Enter key.

6 To return to service the ManB SMA, type

>RTS PM FORCE

and press the Enter key.

At this point the SMA returns to service and the state of the IDTs change from CBsy to InSv.

Method 2 requires operating company personnel to create a store file that contains the steps of Method 1. The advantage of Method 2 is that outage time is reduced through the removal of the delays. These delays are the result of the manual entry of commands on two MAP terminals. Perform the following procedure to create and perform the store file.

Method 2 for increasing the line capacity of an MVI RDT - creating of a read (store) file

Perform the following steps to create a store file used to increase the line capacity of an MVI RDT:

1 To access the store file editor, type

>Edit <filename>

and press the Enter key.

where

filename
is the name you choose for the store file.

>Input

and press the Enter key.

Use this command to enter information in the store file.

TR-303 Generic Interface (continued)

2 Enter the content of the store file in the following way:

a **>MAPCI NODISP;MTC;PM;POST SMA sma_no**

and press the Enter key.

where

sma_no
is the number of the SMA that connects to the RDT you must upsize.

b **>BSY PM FORCE**

and press the Enter key.

Use this command manually to busy the SMA.

c **>Y**

and press the Enter key.

d **>TABLE RDTINV;FORMAT PACK;POS rdtname**

and press the Enter key.

where

rdtname
consists of the site, frame, and unit number of the RDT entered in table RDTINV, for example, RDT1 0 0

e **>CHA VARTYPE**

f **>Y**

The response to the system confirmation request is Y.

g **>GENTMC**

Enter the value entered in field RDTVAR.

h **>2**

Enter the value entered in field RDTPPLNK.

i **>newmaxlines value**

where

newmaxlines value
is the new RDT line size you must enter in table RDTINV, field MAXLINES.

j **>N**

Enter the value entered in the INHLINE field.

k **>N**

Enter the value entered in the BRIDGING field.

l **>Y**

This value confirms the response to the system confirmation message. This message confirms the change to MAXLINES.

m **>QUIT**

n **>RTS PM FORCE**

This command returns the SMA to service.

o >QUIT ALL

3 After you type the information in step Section 2, "Enter the content of the store file in the following way:" on page -104 as the store file, press the Enter key twice to stop edits of the store file.

4 To save the store file, type:

>File SFDEV

and press the Enter key.

where

filename
is the name of the store file input in step Section 1, "To access the store file editor, type" on page -103.

5 To list the store file, type:

>Listsf

and press the Enter key.

This command lists the store files in the SFDEV that you create.

6 To activate the store file to resize the RDT, type

>Read <filename>

and press the Enter key.

where

filename
is the name of the store file you must activate.

This command runs the store file.

7 After you complete the actions to increase the line capacity on the RDT, you can delete the store file to prevent additional use of the file. To delete the store file, type

>Erasesf <filename>

and press the Enter key.

where

filename
is the name of the store file you must delete.

8 This procedure is complete.

Decreasing the line capacity of an RDT

If you decrease the line capacity of an RDT, the SuperNode switch determines if LENs are present above the new (lowered) value. This value is entered in table RDTINV field MAXLINES. If LENs are present above the new value, an error message appears at the MAP terminal. This message informs operating company personnel that you cannot decrease the line capacity of the RDT. You cannot decrease the line capacity because LENs provisioned are above the new provisioned value.

TR-303 Generic Interface (continued)

Decrease the line capacity of an RDT at one MAP terminal. An outage does not occur. When you decrease the line capacity, verify table LNINV to make sure that the system deletes the required number of lines. The system must delete the lines before the system allows an update to table RDTINV, field MAXLINES. Before you delete a tuple from table LNINV, the system clears the lines from other tables like IBNLINES, KSETLINE, KSETINV, LENLINES, and SPECCONN. The system updates table RDTLT after table LNINV. Because of provisioning delays, tuples that you delete from table LNINV can remain in table RDTLT. Check the tuples that remain in table RDTLT.

Note: When you decrease the line capacity of an RDT, the system allows a decrease in the value of the MAXLINES field in table RDTIN. The system allows this decrease after the removal of the LENs that reside above the new (lowered) MAXLINES value.

At the MAP terminal

1 To position on the affected RDT in table RDTINV, type

`>TABLE RDTINV;FORMAT PACK;POS rdtname`

and press the Enter key.

where

rdtname
consists of the site, frame, and unit number of the RDT entered in table RDTINV, for example, RDT1 0 0

2 To change the value of subfield MAXLINES, type

`>CHA VARTYPE`

and press the Enter key.

Respond to the MAP terminal response in the following way:

`>RDTVAR`

Press the Enter key.

`>RDTPPLNK`

Press the Enter key.

`>MAXLINES`

To respond to the MAP terminal response, enter the new MAXLINES value

`>newmaxlines value`

and press the Enter key.

where

newmaxlines value
is the new RDT line size you must enter in table RDTINV, field MAXLINES.

`>INHLINE`

Press the Enter key.

```
>BRIDGING
```

Press the Enter key.

3 To confirm the new MAXLINES entry in table RDTINV, type

>Y

and press the Enter key.

4 The procedure is complete.

To decrease the line capacity of an RDT perform the following procedure.

RDT path protection link information

The remote digital terminal path protection link (RDTPPLNK) field defines which RDT link conveys the secondary, or backup messaging (EOC and TMC) channels in the event of a primary link, (RDT link 1) failure. The range for possible entries is between 1 and 28, though the minimum valid value is 2 for RDT link number. The system rejects entry of a value of 1. A value of 1 attempts to make the secondary messaging channels the same as the primary. This action results in a loss of messaging redundancy.

The minimum number of links required for an RDT is two. The RDTPPLNK value is 2. If four RDT links are defined, the valid values are 2 through 4. When in doubt, use 2. The SMA DS-1 link numbers are zero-based as table LTCPSINV defines. If DS-1 links 4 through 7 are used for a particular RDT, the links become RDT links 1 through 4. Definition of RDT link 3 as the RDTPPLNK corresponds to SMA DS-1 link 6.

Note: When you provision RDTs, consider how the DS-1 links map to the SMA. To guarantee reliability, make sure the primary and secondary messaging links are on separate NT6X50 cards in the SMA. From the RDTs point of view, make sure the primary and secondary messaging links are on separate interface mechanisms or cards.

Setting up a shared metallic bypass to support RDT line tests

Operating companies can configure RDTs to share a common metallic bypass pair for line tests. The companies must include an inhibit lead to block access to the shared bypass pair by the two RDTs, at the same time. Configuration of the inhibit lead requires datafill in tables RDTINV, SCGRP, and SDGRP.

To set up a shared metallic bypass in a DMS-100 central office environment, perform the following procedure:

1 Define SC and SD in tables SDGRP and SCGRP. Refer to the following examples:

TR-303 Generic Interface (continued)

2 Define scan points (SC) and scan distribution points (SD) in tables SDGRP and SCGRP. Refer to the following examples:

```
TABLE: SDGRP:0   MTM   1     20   2X57AATABLE: SCGRP:0
MTM    3       8    0X10AA
```

3 To reserve an SC and an SD point for use as an inhibit lead for an RDT, add the group and point number in table RDTINV.

The following is an example of the table datafill.

```
TABLE: RDTINV:RDT1 101 0 101 SMA 1 101 $ $ $ GENTMC 2 671
N Y (TBP BOTH 4 TAP1 Y 0 1 0 1) $ (1 6) (2 7) $ N STDLN S
$ (NETWORK_ID 1)(NETWORKELEMENT_ID 100) $
```

4 Connect the defined SC and SD points together to function as an inhibit lead. Refer to the following example:

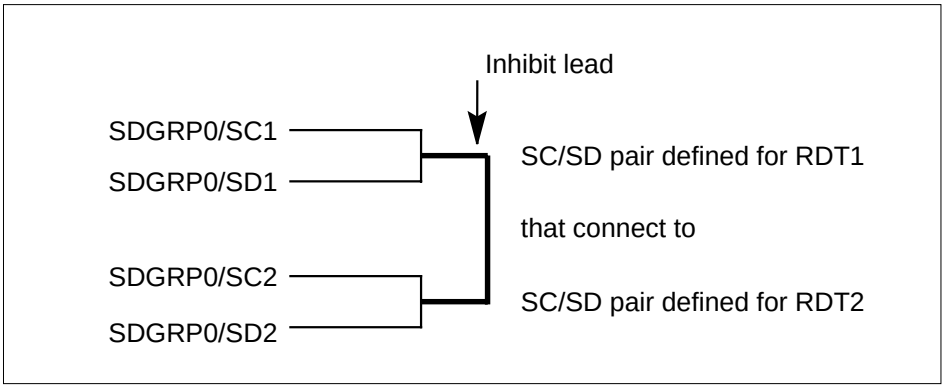

Engineering LAPD parameters

The LAPD flow control mechanism is used for EOCs and the TMC. The LAPD flow control consists of a window K that slides. This window limits the number of remaining frames at one time. This window also limits the receiver-not-ready (RNR) message that one peer can send to the other. The message indicates that the sender cannot accept incoming data.

The EOC transmits provisioning and line maintenance messages to the RDT. For TR-303, the TMC is for call establishment and take down.

Table RDTINV contains one tuple for each RDT. Two additional sets of default values for the LAPD parameter are required for a TR-303 RDT. One default value is for the TMC, and the other value is for the TR303 EOC. These values are used if the RDT entered has a VARTYPE of GENTMC.

TR-303 Generic Interface (continued)

When you enter values for the LAPD parameters, table control enforces a valid range of values.

Note: The SMA must operate at best operation with the LAPD parameters set to the default values. Leave the default values in place. If to change one of these parameters is available, change the default values.

If you must change the LAPD parameters, change the two parameters on each end (RDT and DMS) at the same time. Use the guidelines that appear in the following table.

MVI LAPD parameter values

Parameter	MVI range	Default MVI	Step size
Maximum number of unacknowledged frames (K)	1-7	7	1
Maximum number of retransmissions (N200)	1-10	3	1
Maximum number of octets in one frame (N201)	TMC=1-32 EOC=1-256	TMC=32 EOC=256	NA
Maximum time to wait for acknowledgment for one frame (T200)	100-350 ms	150 ms	50 ms
Period without activity on data link (T203)	10 s-300s	30 s	10 s

Datafill for TR-303 Generic Interface for table RDTINV appear in the following table. Fields that apply directly to TR-303 Generic Interface appear in the table.

Datafilling table RDTINV (Sheet 1 of 11)

Field	Subfield or refinement	Entry	Description
RDTNAME		refer to subfields	RDT name. This field is the key to this table. The name identifies the RDT to the system. This field contains subfields SITE, FRAME, and UNIT.
	SITE	alphanumeric	Site. Enter the four-character site name assigned to the remote location. This entry must also appear in table SITE.
	FRAME	0-511	Frame. Enter the logical frame number.

TR-303 Generic Interface (continued)

Datafilling table RDTINV (Sheet 2 of 11)

Field	Subfield or refinement	Entry	Description
	UNIT	0-9	Unit. Enter the logical unit number. ***Note:*** The unit number must be 0 for the IDT configured with EOC. When the RDTINV field EOC is entered as S or O, the UNIT number entered in this field must be 0.
ADNUM		0-4095	Administration number. The Engineering and Administrative Data Acquisition System for Data Collection (EADAS/DC) use this number to identify nodes in the DMS-100 Family switch. This number remains fixed over dump and restore.
IDTNAME		refer to subfields	IDT name. This field identifies the SMA and the IDT to which the RDT connects. This field contains subfields XPMTYPE, XPMNO, and IDTNO. ***Note:*** The IDT must be offline to change this field.
	XPMTYPE	SMA	XMS-based peripheral module type. This field identifies the type of peripheral to which the RDT connects.
	XPMNO	0-127	XPM number. This number identifies the SMA to which the RDT connects.
	IDTNO	0-255	IDT number. This number identifies the IDT to which the RDT connects. ***Note:*** You cannot delete the IDT cannot if lines attach to the IDT.
NENAME		$	Source identifier. The external operation support system uses this field to identify the RDT. The range is 1 to 20 characters.
PRIMOPC		1-20 characters	Primary OPC identifier. A $ is entered in this field to satisfy the table editor.
BACKOPC		1-20 characters	Backup OPC identifier. A $ is entered in this field to satisfy the table editor.

Datafilling table RDTINV (Sheet 3 of 11)

Field	Subfield or refinement	Entry	Description
VARTYPE		refer to subfield	Variant type. Indicates the type of integrated digital loop carrier. Field VARTYPE contains subfield RDTVAR.
	RDTVAR	GENTMC	RDT variable. Enter GENTMC for an RDT that has generic TR-303 TMC signaling. For the MVI application, the table supports GENTMC. Enter data in subfields RDTPPLNK, MAXLINES, and INHLINE. ***Note:*** You cannot change RDTVAR. You must delete and add the tuple again.
	RDTPPLNK	2-28	RDT path protection link. This field represents the path protection DS-1. This DS-1 represents the link number that the RDT applies. This DS-1 must appear as an RDTLINK value in the LINKMAP vector. This value must not be equal to the DS-1 number 1 of the RDT. ***Note:*** The range of possible entries is between 1 and 28. The minimum valid entry is 2. The system rejects the entry of a value of 1. Entry of 1 can make the secondary messaging channel the same as the primary channel. This action can result in a loss of messaging redundancy. The minimum number of links required for an RDT is 2. The RDTPPLINK value is 2. If four RDT links are defined, the valid values are 2 through 4. When in doubt, use a value of two. ***Note:*** The DS-1 link numbers are zero-based as table LTCPSINV defines. If the system uses DS-1 links 4 through 7 for a specified RDT, the links become RDT links 1 through 4. If RDT link 3 is the RDTPPLINK value, the value corresponds to SMA DS-1 link 6.

TR-303 Generic Interface (continued)

Datafilling table RDTINV (Sheet 4 of 11)

Field	Subfield or refinement	Entry	Description
	MAXLINES	1-2048	Maximum number of lines. Indicates the maximum number of lines a multi-vendor RDT supports. The SMA supports a maximum of 2048 lines for each RDT. You can provision a maximum of eight MVI RDTs with line capacities in the range of 96 to 2048 on an SMA. You can provision a maximum of five RDTs when the RDTs support ISDN. ***Note 1:*** Make line size changes to RDTs subtending the SMA in increments of 96. Make line changes in this method to preclude fragmentation of the terminal identifiers (TID) numbers in the TID table. ***Note 2:*** When you upsize an RDT, refer to the procedure for how to upsize an RDT. The procedure is in the section that precedes the table: Datafilling table RDTINV. ***Note 3:*** When you decrease the line capacity on an RDT, verify table LNINV to make sure that you delete the required number of lines. Delete the required number of lines before you allow an update to field MAXLINES. Before you delete a tuple from table LNINV, the system clears the lines from other tables like IBNLINES, KSETLINE, KSETINV, LENLINES, and SPECCONN. Because of provisioning delays and the condition of the EOC channels, tuples that you delete from table LNINV can remain in table RDTLT. Check the tuples in table RDTLT.
	INHLINE	Y or N	Known lines. Indicates if the MVI RDT supports the creation of the analog and access side of ISDN line instances by entities other than the DMS SuperNode switch. Entry values are yes and no. If Y is entered, another entity creates the analog and access side of line instances at the RDT. If N is entered, the DMS SuperNode switch creates line instances.

Datafilling table RDTINV (Sheet 5 of 11)

Field	Subfield or refinement	Entry	Description
	BRIDGING	Y or N	Bridging. Indicates that the RDT supports if the ChangeToBridged action. The ChangeToBridged action is optional for TR-303 MBS lines. Default value is N.
	CLAPDFLT	Y or N	Choose LAPD default. Specifies for the IDT if default or optional LAPD parameters must be used. Enter Y (use default parameters) or N (need to define the optional parameters). If you enter N, subfield CLAPDPAR appears. ***Note:*** If you choose N, you can enter non-default values for the TMC LAPD parameters. A warning message appears with the default values for the CLAPDPAR subfield when you enter non-default values for the N201 and T200 parameters. If the RDT must support MBS services, change the N201 and T200 values to the values that appear in the following warning message. `WARNING: EBS lines will not work on this RDT. For EBS lines to work on this RDT N201 parameter must be >= 52 and T200 parameter must be >=25.`
	CLAPDPAR	alphanumeric	Choose LAPD parameters. Specifies the nondefault LAPD parameters. Enter the selected link access procedure and complete the refinements identified in the following: • N201 and a number from 1-256 • N200 and a number from 1-10 • K and a number from 1-7 • T203 and a number from 10-300 • T200 and a number from 100-350
MTSTACPT		refer to subfield	Metallic test access point. This field is the selector field that identifies types of metallic test access (MTA) points, configured on the RDT.

TR-303 Generic Interface (continued)

Datafilling table RDTINV (Sheet 6 of 11)

Field	Subfield or refinement	Entry	Description
	TSTUTTYP	TBP, ERTU, or $	The selector field includes • TBP (test bypass pair) • ERTU (external remote test unit) • $ (no entry, or stops)
TBP		refer to subfields	Test bypass pair. This selector identifies the MTA point configured to supply metallic test bypass for MTM-based test heads. This selector also identifies NTT access that requires a horizontal cross-connect at the MTA, the trunk circuit for the metallic line test equipment. This field contains subfields TSTHDUSR, VERTID, and TSTACCPA.
	TSTHDUSR	MAPIF, NTTIF or BOTH	Test head user. Use this field to tell which test system (MAP, NTT or BOTH) uses the test head.
	VERTID	0-1023	Vertical identifier. This field replaces the VERTID section of the original prompt (PT_CONNECTION_INFO). This field represents the vertical in the MTA matrix to which the control path is tied.
	TSTACCPA	TAP1	Test access path. This field replaces the MTAUID and MTAPTID section of the original prompt PT_CONNECTION_INFO. The TBP connects to TAP1.
	SCSDUSED	Y or N	Scan point/signal distributor point used. Enter Y if SD/SD points are used and provide the multiple that contains: • INHSCGRP—range of 0-511 • INHSCPT—range of 0-6 • INHSDGRP—range of 0-511 • INHSDPT—range of 0-6 In other occurrences, enter N.

Datafilling table RDTINV (Sheet 7 of 11)

Field	Subfield or refinement	Entry	Description
NTTOPT		Y or N	No test trunk signature option. This field indicates if the no test trunk (NTT) direct current (dc) voltage signature is enabled for a specified RDT. If the value is Y, the system provides the dc signature for POTS, coin, and multi-party lines. In other occurrences, the system does not provide the signature for the line types. ***Note:*** When the NTTOPT field has the entry N or changes to N, the system outputs the following message at the MAP terminal: `NTT signature will not be provided during line maintenance.`
ERTU		refer to subfields	External remote test unit. This selector identifies an external metallic test head on the RDT for NTT test. This selector is compatible with the TBP selector, which is used for MAP terminal testing. This field contains subfields VERTID and TSTACCPA.
	VERTID	0-1023	Vertical identifier. This field replaces the VERTID section of the original prompt (PT_CONNECTION_INFO). This field represents the vertical in the MTA matrix to which the control path is tied.
	TSTACCPA	TAP1	Test access path. This field replaces the MTAUID and MTAPTID section of the original prompt PT_CONNECTION_INFO. The ERTU can connect to TAP 1.
	SCSDUSED	Y or N	Scan point/signal distributor point used. Enter Y if SD/SD points are used and provide the multiple that contains: • INHSCGRP range of 0-511 • INHSCPT range of 0-6 • INHSDGRP range of 0-511 • INHSDPT range of 0-6 In other occurrences, enter N.

TR-303 Generic Interface (continued)

Datafilling table RDTINV (Sheet 8 of 11)

Field	Subfield or refinement	Entry	Description
LINKTAB		numeric	Link table. This field is a vector, with a maximum of 20 entries. This field defines how the system maps the C-side links of the RDT (logical link), to the peripheral side (P-side) links (physical link) of the SMA. ***Note 1:*** When you enter data in field C-side link table (LNKTAB), make sure message links are not assigned to the same physical interface card. When the interface card supports two or more links, separate the message links by the number of links on the interface cards. If you make an attempt to assign message links on the same interface card, table control issues a warning. Assignment of message links to the same interface card can cause an E1 power failure if the card fails. An E1 power failure is a failure of the message links. ***Note 2:*** Make changes to fields with multiple entries in the PROMPT mode.
PROT		N	Facility protection switching. Specifies if table supports protection switching.
POTSPADG		STDLN	POTS pad group. The acceptable values are UNBAL and STDLN. Enter STDLN as a value.
EOC		refer to subfields	Embedded operations channel. Indicates if EOC is present. Indicates if standard or LAPD parameters are used. This field contains subfields EOCTYPE and ELAPDPAR. ***Note:*** The IDT and the channel must be offline to have changes.

Datafilling table RDTINV (Sheet 9 of 11)

Field	Subfield or refinement	Entry	Description
	EOCTYPE	S or O	EOC type. Indicates if the EOC uses standard or optional LAPD parameters. Enter • S for standard LAPD parameters • O for optional LAPD parameters. The subfield ELAPDPAR appears. ***Note:*** The LAPD parameters of the EOC/TMC can change when the IDT and the channel are man-busied or offline. When you enter an RDT with S or O, the value of the UNIT in RDTNAME must be 0.
	ELAPDPAR	alphanumeric	EOC LAPD parameters. Appears when you enter O in the EOCTYPE subfield. Specify the optional LAPD parameters. Enter five values, with a space between each value. • Enter N201 and 256 ms • Enter N200 and a number from 1-10 • Enter K and a number from 1-7 • Enter T203 and a number from 10 s-300 s • Enter T200 and a number from 1 ms-1023 ms

TR-303 Generic Interface (continued)

Datafilling table RDTINV (Sheet 10 of 11)

Field	Subfield or refinement	Entry	Description
SDPOINTS		alphanumeric	Signal distribution points. Enter the signal distribution point that correspond to this RDT. If which-RDT SD points operate when the RDT enters an alarm, the range of values are: • RDTSD1 • RDTSD2 • RDTSD3 • RDTSD4 • RDTSD5 • RDTSD6 • RDTSD7 • RDTSD8 A maximum of 255 different groups of activated SD points indicate that the RDT raises an alarm. Use this field to group RDTs. Assign the same which-RDT points to multiple RDTs. Enter each SD point in table ALMSD. The IDT must be offline to change the SD point. ***Note:*** If this field is set to $ (nil), which indicates that SD point for an RDTs alarm does not contain data. This field also indicates that the system does not activate the SD points that indicate alarm severity. The alarms can be RDTCRIT, RDTMAJOR, RDTMINOR.
RDTDN		refer to subfields	RDT distinguished name. This field is a vector of one to five elements for the RDT_RDN. Each element represents a relative distinguished name (RDN) that comprises the distinguished name of the RDT. This field receives data when you add an RDT tuple. If an attempt to modify this field occurs, an error message can appear.

Datafilling table RDTINV (Sheet 11 of 11)

Field	Subfield or refinement	Entry	Description
	RDN_TYPE		Relative distinguished name. Enter the RDN of the RDT. The range of values is: • NETWORK_ID • NETWORKELEMENT_ID If field VARTYPE is set to GENTMC, NETWORK_ID and NETWORKELEMENT_ID must be specified. For an RDT, set the network_id value to 1.
	RDN_VAL	0-32767	Relative distinguished name value. Enter the value for the RDN.

Datafill example for table RDTINV

Sample datafill for table RDTINV appears in the following example.

MAP example for table RDTINV

```
RDTNAME  ADNUM  IDTNAME                NENAME
         PRIMOPC                       BACKOPC
                                               VARTYPE
                                               MTSTACPT
     NTTOPT
                                                LINKTAB
    PROT  POSTPADG          EOC
                                               SDPOINTS
                                                RDTDN
-------------------------------------------------------
RDT1 03 2   10     SMA 1 3              $
           $                            $
                                GENTMC    2 2048  Y  Y
                                                    $
       Y
                             (1 3) (2 5) (4 6) (7 8)    $
 N     STDLN            S                             $
                (NETWORK_ID 1) (NETWORKELEMENT_ID 22)  $
```

TR-303 Generic Interface (continued)

Error and warning messages for table RDTINV

The following error and warning messages apply to table RDTINV.

Error and warning messages for table RDTINV (Sheet 1 of 3)

Error message	Description
`Warning: Additional static data not updated for <SMA> <sma_no> <unit_no>.`	The dynamic update of static data fails.
`Warning: Additional static data updates completed for SMA.`	The dynamic update of static data succeeds.
`Warning: SMA <sma_no> is in overload. Static data update may fail.`	An attempt to move an IDT from one SMA to another SMA occurs. The SMA to which the IDT must move, is in an overload condition. Static data can require a manual update after the user moves an IDT.
`Error: XPM message link <link no> cannot be changed to a speech link.`	An attempt to change a message link with a speech link occurs.
`TR303 RDT CARY 2 0 does not support the drawer option.`	The POST command with the drawer option is disabled for MVI RDT lines.
`TR303 LAPD parameter T200 for the EOC is out of range.`	The range of parameter T200 is smaller in the TR-303, than the RDT. The RDT range for parameter T200 is implemented in table control.
`RFT LAPD parameter T203 for the EOC is out of range.`	The range of parameter T203 is larger in the TR-303 than the RDT. The TR-303 range for parameter T203 is implemented in table control.
`Error: Cannot delete this IDT until all lines are deleted at the RDT. Return to service EOC and allow delete requests to be processed. Monitor table RDTLT for the status of these lines.`	The system deletes the lines that associate with the IDT from table LNINV. The system does not receive or process delete request confirmations before the deletion of the IDT from table RDTINV.
`Error: Primary messaging DS1 link not configured.`	The LINKMAP vector does not have elements entered.

Error and warning messages for table RDTINV (Sheet 2 of 3)

Error message	Description
`Error: RDTPPLNK field may not be changed.`	The path protection DS-1 cannot change. This DS-1 is set as message able. Delete and add the tuple again.
`Error: Secondary message DS1 is not in use.`	A LINKMAP element is not entered with a RDTLINK value that corresponds to the defined RDTPPLNK value.
`Error: Cannot have more than 8 RDTs on this SMA.`	An attempt to enter one more RDT on an SMA. The maximum RDT calculation determines that the SMA is allowed. The maximum RDT calculation appears at the beginning of the section on how to enter data in table RDTINV.
`Error: Only RDTs of 724 lines are allowed on this host peripheral.`	An attempt occurs to enter data in an RDT. The RDT is larger or smaller than the first RDT entered on the SMA as 724 (for example). ***Note:*** This error also occurs if you attempt to move a RDT from one SMA to another SMA with a different size RDT.
`Error: Cannot have more than 5 RDTs with a DCH present.`	An attempt occurs to enter more than five RDTs on an SMA that supports EDCHs.
`Error: MAXLINES field may not be changed while other fields are being changed.`	An attempt occurs to change other fields in table RDTINV at the same time you make changes to field MAXLINES. You cannot make changes to other fields in table RDTINV that are not allowed when you change the MAXLINES field.
`Warning: Increments of 96 lines or greater are recommended. Refer to NTPs for details.`	An attempt to change field MAXLINES in increments smaller than 96 lines occurs.

TR-303 Generic Interface (continued)

Error and warning messages for table RDTINV (Sheet 3 of 3)

Error message	Description
`Error: This RDT cannot be downsized because there are LENS provisioned above <line number>.`	Downsize the IDT when LENS are provisioned above the new (lowered) value.
`Error: MAXLINES field may not be increased while SMA is <invalid state>.`	Upsize an RDT when the SMA is not in the ManB or Offl state.

Datafilling table TMINV

The trunk module inventory (TMINV) table contains hardware and software information for each trunk module provisioned in an office. This table is important for the SMA-RDT system. This table identifies the trunk modules or MTMs that contain test circuits that terminate test pairs that connect to RDT lines.

Datafill for TR-303 Generic Interface for table TMINV appears in the following table. Fields that apply directly to TR-303 Generic Interface appear in this table.

Datafilling table TMINV (Sheet 1 of 2)

Field	Subfield or refinement	Entry	Description
TMNM		refer to subfields	Trunk module number. This field contains subfields TMTYPE and TMNO.
	TMTYPE	TM8, MTM, or OAU	Trunk module type. Enter the trunk module type.
	TMNO	numeric	Trunk module number. Enter the trunk module number. Range for TM8 is 0-2047. The range for maintenance trunk module (MTM) is 0-255. For an office alarm unit (OAU), enter 0.
FRTYPE		TME	Frame type. Enter the frame type where the trunk module is located. Enter TME.
FRNO		numeric	Frame number. Enter the frame number of the TME frame.

Datafilling table TMINV (Sheet 2 of 2)

Field	Subfield or refinement	Entry	Description
SHPOS		numeric	Shelf position. Enter the base mounting position of the trunk module. For TM8, range is 04, 18, 32, 51, or 65. For an MTM, enter 65. For an OAU, enter 51.
FLOOR		0-99	Floor. Enter the floor number which is the location of the trunk module.
ROW		alphabetic	Row. Enter the row number which is the location of the trunk module. The range is A-H, J-N, P-Z, AA-HH, JJ-NN, and PP-ZZ.
FRPOS		numeric	Frame position. Enter the bay position of the TME frame.
LKDATA		refer to subfields	C-side link data. For switches that have the JNET, this field contains subfields NMPAIR and NMPORT. For switches that have the ENET, this field contains subfields ENPAIR, ENSLOT, and ENLINK.
	NMPAIR	0-31	Network module pair number. Enter the network module number assigned to the trunk module.
	NMPORT	0-63	Network port number. Enter the network module port number assigned to the trunk module.
	ENPAIR	0-3	ENET pair number. Enter the network pair number where the PM is assigned.
	ENSLOT	9-32	ENET slot number. Enter the crosspoint slot number where the PM is assigned.
	ENLINK	0-15	ENET link number. Enter the link on the crosspoint where the PM is assigned.
EQPEC		alphanumeric	Equipment product engineering code. Enter the PEC of the trunk module.
LOAD		alphanumeric	Load. Enter the issue name of the PM software.
EXECS		alphanumeric	Executive programs. Enter the set of executive programs required for the trunk module.

TR-303 Generic Interface (continued)

Datafill example for table TMINV

Sample datafill for table TMINV appears in the following example.

MAP example for table TMINV

```
TMNM FRTYPE FRNO SHPOS FLOOR ROW FRPOS LKDATA EQPEC    LOAD
 EXECS      SCTMLOC
-------------------------------------------------------
TM8 0   TME    1   65     0   L   16   0 53 2X52AG  BTMKA02
 TM8EX            N
```

Datafilling table TRKGRP

Table trunk group (TRKGRP) contains customer defined data for each trunk group in the switching unit. Each trunk group entry in table TRKGRP consists of a different CLLI for the trunk group, and a number of other fields. The trunk group type (field GRPTYP) determines the fields. The trunk group types that apply to the SMA-RDT system are MAINT for maintenance trunks like MTU. The trunk group types are TD for no test trunks like BASIC or MLT trunks. Table TRKGRP identifies test circuits that associate with maintenance and test trunks.

SCM line monitor access

When operating company personnel at a remote test center start tests on a subscriber line, the line can be in a call processing busy state. Subfield BARGE in table TRKGRP determines if operating company personnel can access the line when in the bridged mode through a conference card. This access allows operating company personnel to verify the line is busy. This access does not allow personnel to give a defective busy signal through use of a no test trunk. When the subfield is set to Y, personnel can access the line through a conference card. When the subfield is set to N, which is the default value, personnel cannot access the line through a conference card.

Because of the many configurations of table TRKGRP, a datafill procedure is not available for this table.

Datafill example for table TRKGRP

Sample datafill for table TRKGRP appears in the following example.

MAP example for table TRKGRP

```
GRPKEY                                  GRPINFO
-------------------------------------------------------
HSET
          MAINT   0  NPDGP  NCRT  5X30AA
TERM101
          MAINT   0  NPDGP  NCRT  5X30AA
JACK
          MAINT   0  NPDGP  NCRT  1X54AA
LTU
          MAINT   0  NPDGP  NCRT  2X11AA
MTU
          MAINT   0  NPDGP  NCRT  2X90AD
```

Datafilling table TRKSGRP

Table trunk subgroup (TRKSGRP) lists additional information for each subgroup assigned to one of the trunk groups that appear in table TRKGRP.

Input data must be specified for a minimum of one subgroup. Input can also be specified for a maximum of two subgroups for each trunk group that appears in table TRKGRP. Input cannot be specified for trunk groups defined as maintenance group types.

Note: Table TRKGRP datafill produce the trunk subgroup data for maintenance and test trunks. The table does not produce the data for subgroup one of trunk group with code TTU.

Because of the configurations of table TRKSGRP, a datafill procedure is not available for this table.

Datafill example for table TRKSGRP

Sample datafill for table TRKSGRP appears in the following example.

MAP example for table TRKSGRP

```
      SGRPKEY  CARDCODE
                                                    SGRPVAR
-------------------------------------------------------------
MTU 0   2X11BA
  STD OG    NP     WK   0 0 NO   NO F N N  17
UNEQMONTALK 0   2X90AD
  STD OG    NP     WK   0 0 NO   NO F N N  17   UNEQTTU 0
   2X47AC
   STD OG    NP     WK   0 0 NO   NO F N N  17   UNEQ
```

TR-303 Generic Interface (continued)

Datafilling table TRKMEM

Table trunk member (TRKMEM) lists data that associate with each trunk assigned to one of the trunk groups and trunk subgroups specified in tables TRKGRP and TRKSGRP. Table TRKMEM identifies the circuits associated with test equipment and trunks entered in tables TRKGRP and TRKSGRP.

A datafill procedure is not available for this table.

Datafill example for table TRKMEM

Sample datafill for table TRKMEM appear in the following example.

MAP example for table TRKMEM

```
CLLI    EXTRKNM    SGRP                MEMVAR
-----------------------------------------------------
MTU         0      0                 MTM   0 22
MTU         1      0                 MTM   2  2
HSET        0      0                 TM8   0  4
```

Datafilling table SFWALARM

Table software alarm (SFWALARM) associates a software alarm with SD points that must be activated when that software alarm is activated. You cannot add or delete entries in this table. Operating company personnel can change the data.

Datafill for TR-303 Generic Interface for table SFWALARM appear in the following table. Fields that apply directly to TR-303 Generic Interface appear in this table.

Datafilling table SFWALARM (Sheet 1 of 2)

Field	Subfield or refinement	Entry	Description
FUNCTION		alphanumeric	Function. Enter the system alarm function. The function can have a maximum of 16 characters. The system adds RDTWRN.
REPORT		Y or N	Report. Enter Y if the system logs an alarm report. In other occurrences, enter N. For RDTWRN, set this value to N.
ALM		CR, MJ, MN, or NA	Alarm. Enter the type of alarm that the system activates or NA for not applicable. For RDTWRN, set this value to NA.

Datafilling table SFWALARM (Sheet 2 of 2)

Field	Subfield or refinement	Entry	Description
LOGIC		refer to subfields	Logic. This field consists of subfields SDFUNCT, ALMGRP and ALMXFR.
	SDFUNCT	alphanumeric	Signal distributor function. Enter the signal distributor function(s) that associate with a specified system alarm. For RDTWRN, this value must be RDTWARN.
	ALMGRP	Y or N	Alarm grouping. Enter Y if the alarm function is implemented when the system activates the alarm grouping key. In other occurrences, enter N. For RDTWRN, this value must be N.
	ALMXFR	Y or N	Alarm transfer. Enter Y if the alarm function is implemented when the system activates the alarm transfer key. In other occurrences, enter N. For RDTWRN, this value must be N.
	CONTMARK	+ or $	Continuation mark. Enter a (+) sign to indicate the line continues, or a ($) to indicate the end of the line.

Datafill example for table SFWALARM

Sample datafill for table SFWALARM appears in the following table.

MAP example for table SFWALARM

```
FUNCTION
 REPORT  ALM                                    LOGIC
---------------------------------------------------------
 RDTCRT
     N   CR  (RDTCRIT N N)    $
 RDTMJ
     N   MJ  (RDTMAJOR N N)   $
 RDTMN
     N   MN  (RDTMINOR N N)   $
RDTWRN
     N   NA  (RDTWARN N N)    $
```

TR-303 Generic Interface (continued)

Datafilling table LINEATTR

Line attributes entered in table line attribute (LINEATTR) are assigned to normal lines in table LENLINES. Line attributes are also assigned to Meridian stations and attendant consoles in MDC translation tables.

Datafill for TR-303 Generic Interface for table LINEATTR appear in the following table. Fields that apply directly to TR-303 Generic Interface appear in this table.

Datafilling table LINEATTR (Sheet 1 of 4)

Field	Subfield or refinement	Entry	Description
LNATTIDX		0-1023	Line attribute index. Enter the index in the table.
LCC		alphanumeric	Line class code. Enter the line class code assigned to the line attribute index number. If a line class code is not available, enter NLCC.
CHGCLSS		alphanumeric	Charge class. Enter the charge class for switching units configured with Local Automatic Message Accounting (LAMA). In other occurrences, enter NONE.
COST		HI, LO, or NT	Class of service tone. Enter the class of service tone required.
SCRNCL		alphanumeric or NSCR	Class of service screening subtable name. Enter the four-character class of service assigned in the line attribute index. Enter NSCR if screening by class is not required.
LTG		0-255	Line treatment group. Enter the line treatment group number assigned to the line attribute index.
STS		numeric	Serving translation scheme. Enter the three-digit that serves numbering plan area (NPA) assigned to the line attribute index.
PRTNM		alphanumeric or NPRT	Standard pretranslator subtable name. Enter the four-character pretranslator subtable name assigned to the line attribute index. Enter NPRT if standard pretranslation is not required.

Datafilling table LINEATTR (Sheet 2 of 4)

Field	Subfield or refinement	Entry	Description
LCANAME		alphanumeric or NLCA	Local calling area screening subtable name. Enter the five-character local calling area screening subtable name assigned to the line attribute index. Enter NLCA if screening is not required.
ZEROMPOS		alphanumeric or NONE	Zero minus position. Enter the ten-character position from table POSITION where the system routes operator zero minus calls. Enter NONE operator zero minus calls do not occur.
TRAFSNO		0-127	Traffic separation number. Enter the network module number assigned to the trunk module.
CONTMARK		+	Continuation mark. Enter a plus sign to indicate that the next record contains additional information for the tuple.
MRSA		alphanumeric or NIL	Message rate service area. Enter the eight-character message rate service area name from table MRSA. Enter NIL if multi-unit message rate services are not required.
SFC		alphanumeric or NILSFC	International subscriber feature class. Enter a six-character international subscriber feature class name from table FEATCHG. Enter NILSFC if international classes are not required.
LATANM		alphanumeric	Local access and transport area name. Enter the 8-character local access and transport area name assigned to the line attribute index.
MDI		0	Metering data index. Enter the metering data index number assigned to the line attribute index. Enter 0 if international metering data is not required.
XNAME		refer to subfields	International translation system start. This field consists of subfields XLASYS and XLANAME.
	XLASYS	AC, AM, CT, DT, FA, FT, OFG, NSL, PX, or NIL	International translation system. Enter the head table name where translation starts. Enter NIL if the switching unit does not have an international load.

TR-303 Generic Interface (continued)

Datafilling table LINEATTR (Sheet 3 of 4)

Field	Subfield or refinement	Entry	Description
	XLANAME	alphanumeric or NIL	International translation name. Enter the 8-character index that field XLASYS references. Enter a blank if subfield XLASYS is entered as NIL.
DGCL- NAME		alphanumeric or NIL	Digital analysis tables entry point. Enter an 8-character digital analysis name that appears in tables DGHEAD and DGCODE. Enter NIL if the switching unit does not have an international load.
FANIDIGS		00-99	Flexible ANI information digit pairs. Enter the flexible automatic number identification information digit pair assigned to the line attribute index. Enter 00 if the switching unit does not have feature BR0713.
CONTMARK		+	Continuation mark. Enter a plus sign to indicate that additional information for the tuple is in the next record.
RESINF		refer to subfields	Residential enhanced services information. This field consists of subfields RESINFO, CUSTGRP, SUBGRP, and NCOS.
	RESINFO	Y or N	Residential enhanced services information. Enter Y if the line attribute index must support residential (RES) lines. Enter N if the line attribute index must not support RES lines.
	CUSTGRP	alphanumeric	Customer group. Enter a 16-character group name assigned to the line attribute index that appears in table CUSTENG.
	SUBGRP	0-7	Customer subgroup. Enter the subgroup in the customer group that associates with the line attribute index.
	NCOS	0-255	Network class of service number. Enter the network class of service number in the customer group, that associates with the line attribute index. The network class of service number also appears in table NCOS.

Datafilling table LINEATTR (Sheet 4 of 4)

Field	Subfield or refinement	Entry	Description
OPTIONS		AMAGRPID, HOT, LDSV, or LCABILL	Line attribute options. This field is a vector that consists of four options. Enter AMAGRPID if a group identity for a subscription basis tariff is required. Enter HOT if identification of hotel lines to a traffic operator position system is required. Enter HOT if the outgoing trunk group is OP. Enter LDSV if long distance signal (LDS) or long distance alerting (LDA) is required. Enter data in subfield STATUS. Enter LCABILL if a noninterexchange carrier call is billable.
	AMAGRPID	alphanumeric	Automatic message accounting group identifier. Enter the 8 character group identifier that appears in table AMAGRPID.
CONTMARK		$	Continuation mark. Enter $ to indicate the end of the tuple.

Datafill example for table LINEATTR

Sample datafill for table LINEATTR appears in the following example.

MAP example for table LINEATTR

```
LNATTIDX LCC CHGCLSS COST SCRNCL LTG STS PRTNM LCANAME
ZEROMPOS TRAFSNO
MRSA SFC LATANM MDI IXNAME OGCLNAME FANIDIGS RESINF
OPTIONS
-------------------------------------------------------
0  1FR  NONE  NT  NSCR  0  919  POTS  LCA0  CTOP  20
NIL NILSFC NILLATA  0  NIL  NIL  00              N $
```

Datafilling table LNINV

For a complete description of table LNINV, refer to the previous description in this document.

TR-303 Generic Interface (continued)

This software release provides the following modifications for table LNINV.

- A new description of fields SHELF and SLOT for the LEN of an MVI RDT line.
- The creation or removal of the analog object at the RDT when you add or delete a non-ISDN line from table LNINV.
- The creation or removal of certain functions when you add or delete an ISDN line from table LNINV. These functions include the ISDN line termination, ISDN framed path termination, DS0 channel termination, quarter DS-0 channel termination, and cross connection object instances.
- The ability to change the line card code of the MVI RDT line from RDTLSG to RDTCON or RDTCON to RDTLSG.
- The ability to add or delete the QDS0 channel termination and cross connection object instances at the transport side. The addition or deletion of these functions when the status of a MVI RDT ISDN line changes from HASU to operational, or operational to HASU.
- The ability to select the type of ringing.

Mapping fields SHELF and SLOT to the line number

When you enter the RDT in table RDTINV, the number of lines the RDT supports determines the maximum value for SHELF in table LNINV. The following table provides the RDT line capacity to SHELF range. The SHELF range is 0 to 20 to the maximum that table RDTINV defines. The size of RDT that you enter determines the maximum.

Note: Operating company personnel must view the groups of fields SHELF (RDTLSG) and SLOT (RDTCKT) as the call reference value (CRV) or virtual LENs. This value is a logical number equal to the line circuit. For example, if field SHELF is entered as 3, and field SLOT is entered as 4, the MVI RDT LEN represents a CRV of 304. Together, the two fields can take a value of 1-2048. For this value, RDT SHELF represents the thousands and hundreds columns (the 20 of 2048) and RDT SLOT represent the tens and units columns (the 48 of 2048).

The values of SHELF (RDTLSG) and SLOT (RDTCKT) depend on the values entered in table RDTINV. For an RDT that has 672 lines, the range for SHELF is 0 to 6. The value for SLOT has a range of 0 to 99 for lines 99 to 599, with a maximum of 72 to line 672.

The SITE, FRAME, and UNIT numbers form a line module (LM) number. The SHELF and SLOT numbers map to a terminal number. The system provides table control through table RDTINV.

How the maximum number of lines is controlled

The maximum number of lines for the RDT is 2048. The system uses field SHELFSLT for the RFT variant. If the system uses the GENCSC or GENTMC variants, the system uses field MAXLINES in table RDTINV. The system uses this field in this table to limit the number of lines an RDT can support.

Datafill for TR-303 Generic Interface for table LNINV appear in the following table. Fields that apply to TR-303 Generic Interface appear.

Datafilling table LNINV (Sheet 1 of 2)

Field	Subfield or refinement	Entry	Description
LEN		refer to subfields	Line equipment number. This field contains subfields: SITE, RDTFRAME, RDTUNIT, RDTSHELF, and RDTSLOT.
	SITE	alphanumeric	Site. Enter the location of the RDT (four-character alphanumeric). This entry is not optional. A default value is not assigned to the entry.
	RDT FRAME	0-511	RDT frame. Enter the RDT frame number, which is not a physical frame but a software entity. This software entity represents to which the group the RDT belongs at the site.
	RDT UNIT	0-9	RDT unit. Enter the number that represents the RDT unit in the group.
	RDT SHELF	0-20	RDT shelf. Enter the shelf number where the RDT resides. For GENTMC signaling, the range is from 0-20, to the maximum that table RDTINV defines. The size of RDT entered determines the maximum.
	RDT SLOT	0-99	RDT slot. Enter the slot number where the RDT resides. For GENTMC signaling, the range is from 0-99, to the maximum that table RDTINV defines. The size of RDT entered determines the maximum.

TR-303 Generic Interface (continued)

Datafilling table LNINV (Sheet 2 of 2)

Field	Subfield or refinement	Entry	Description
CARDCODE		RDTCON, RDTEBS, RDTLSG, RDTISD or RDTMPY	Card code. Enter the PEC of the line card or line card carrier. The following list identifies the correct object class type for the card code values that appear. • RDTCON coin • RDTEBS electronic business set • RDTLSG loop start/ground start • RDTISD ISDN • RDTMPY multiparty
PADGRP		STDLN, UNBAL, RCT, LRLM or NPDGP	Pad group. Enter the name of the pad group assigned to the line circuit in table PADDATA. Pads can be applied on the lines at the SMA.
STATUS		HASU, WORKING, UNEQUIP, CUTOFF or RESERVED	Status. Enter the line inventory availability status.
GND		Y or N	Ground. Where line is ground start, enter Y. Otherwise, enter N for loop start.
BNV		L or NL	Balanced network value. Enter L when line circuit is configured for a loaded network. In other occurrences, enter NL for nonloaded network. The table does not support this value for BCS35.
MNO		Y or N	Manual override. Enter Y when the system does not allow an on-hook balance network test to update field BNV. In other occurrences, enter N to allow off-hook balance network test to update field BNV.
CARDINFO		RDT C, RDT S, or NIL	Card information. When RDT is selected, the system presents a subfield prompt for C or S. In this subfield, RDT C is synonymous with coded ringing, and RDT S is synonymous with superimposed ringing. The RDT C or RDT S is permitted if in table RDTINV, field VARTYPE is entered as GENTMC. The default value is NIL.

Datafill example for table LNINV

Sample datafill for table LNINV appears in the following table.

MAP example for table LNINV

```
LEN             CARDCODE  PADGRP  STATUS  GND  BNV
MNO  CARDINFO
------------------------------------------------
CARY 01 0 06 72   RDTLGS  STDLN    HASU   N    NL
N    RDT C
```

Error messages for table LNINV

The following error messages apply to table LNINV.

Error messages for table LNINV

Error message	Description
`Error - invalid cardtype entered for this line card`	Attempt of a RDT cardinfo entry on a non-MVI RDT line. The VARTYPE field in table RDTINV is not GENTMC.

Datafilling table RDTLT

Table remote digital terminal line termination (RDTLT) contains information about the next operation that the line object provisioning process must perform. The line object provisioning process performs operations on a line that connects to the RDT. The LEN of the line card identifies the line. This table correlates the LEN of the line card to the status of the message flow between the DMS switch and the RDT. The message flow is about the line-related objects.

The system adds a tuple to this table when the system enters a new line for the RDT in table LNINV. The system deletes a tuple for this table when the

TR-303 Generic Interface (continued)

system deletes a line that connects to the RDT. Table RDTLT is a *read-only* table.

Datafilling table RDTLT (Sheet 1 of 9)

Field	Subfield or refinement	Entry	Description
LEN		refer to subfields	Line equipment number. This field defines the location of the equipment that connects to a specified telephone line. For ISDN lines, field LEN consists of subfield LTID. For non-ISDN lines, field LEN consists of subfields SITE, FRAME, UNIT, DRAWER or LSG, SHELF, SLOT, and CIRCUIT.
ACCESS		refer to below	Line provisioning process operation. This field identifies the operation that the line provisioning process performs for an RDT line.
		ACCESS_NIL	Operations are not required.
		I_ACCESS_ DONE	Line objects provisioning for ISDN line complete.
		I_CHA_IPTIS_ CONF	Waits for response to message: `CHANGE PRIMARY STATE OF ISDN PATH TERMINATION (PT) TO IN SERVICE`
		I_CHA_IPTIS_ REQ	Send message: `CHANGE PRIMARY STATE OF ISDN PT OBJECT TO IN SERVICE`
		I_CHA_ IPTOOS_ CONF	Waits for response to message: `CHANGE PRIMARY STATE OF ISDN PT TO OUT OF SERVICE`
		I_CHA_ IPTOOS_ CONF1	Waits for response to message: `CHANGE PRIMARY STATE OF ISDN PT TO OUT OF SERVICE`
		I_CHA_ IPTOOS_ REQ	Send message: `CHANGE PRIMARY STATE OF ISDN PT OBJECT TO OUT OF SERVICE`

Note: The previous values that end with 1 are for delete and create operations.

Datafilling table RDTLT (Sheet 2 of 9)

Field	Subfield or refinement	Entry	Description
		I_CHA_ IPTOOS_ REQ1	Send message: `CHANGE PRIMARY STATE OF ISDN PT OBJECT TO OUT OF SERVICE`
		I_CHA_LTIS_C ONF	Waits for response to message: `CHANGE PRIMARY STATE OF ISDN LINE TERMINATION (LT) TO IN SERVICE`
		I_CHA_LTIS_R EQ	Send message: `CHANGE PRIMARY STATE OF ISDN LT OBJECT TO IN SERVICE`
		I_CHA_LTO-OS_CONF	Waits for response to message: `CHANGE PRIMARY STATE OF ISDN LT TO OUT OF SERVICE`
		I_CHA_LTO-OS_CONF1	Waits for response to message: `CHANGE PRIMARY STATE OF ISDN LT TO OUT OF SERVICE`
		I_CHA_LTO-OS_REQ	Send message: `CHANGE PRIMARY STATE OF ISDN LT OBJECT TO OUT OF SERVICE`
		I_CHA_LTO-OS_REQ1	Send message: `CHANGE PRIMARY STATE OF ISDN LT OBJECT TO OUT OF SERVICE`
		I_CRE_ A1DCT_CONF	Waits for response to message: `CREATE FIRST DS-0 CHANNEL TERMINATION (CT) OBJECT`
		I_CRE_ A1DCT_REQ	Send message: `CREATE FIRST DS-0 CT OBJECT`
		I_CRE_ A2DCT_CONF	Waits for response to message: `CREATE SECOND DS-0 CT OBJECT`
Note: The previous values that end with 1 are for delete and create operations.			

TR-303 Generic Interface (continued)

Datafilling table RDTLT (Sheet 3 of 9)

Field	Subfield or refinement	Entry	Description
		I_CRE_ A2DCT_REQ	Send message: CREATE SECOND DS-0 CT OBJECT
		I_CRE_ AQDCT_ CONF	Waits for response to message: CREATE QDS-0 CT OBJECT
		I_CRE_ AQDCT_REQ	Send message: CREATE QDS-0 CT OBJECT
		I_CRE_ICT_ CONF	Waits for response to message: CREATE ISDN CT OBJECT
		I_CRE_ICT_ REQ	Send message: CREATE ISDN CHANNEL TERMINATION (CT) OBJECT
		I_CRE_IPT_ CONF	Waits for response to message: CREATE ISDN PT OBJECT
		I_CRE_IPT_ REQ	Send message: CREATE ISDN PATH TERMINATION (PT) OBJECT
		I_CRE_LT_ CONF	Waits for response to message: CREATE ISDN LT OBJECT
		I_CRE_LT_ REQ	Send message: CREATE ISDN LINE TERMINATION (LT) OBJECT
		I_DEL_IPT_ CONF	Waits for response to message: DELETE PT AND ALL SUBTENDING OBJECTS
		I_DEL_IPT_ CONF1	Waits for response to message: DELETE PT AND ALL SUBTENDING OBJECTS
Note: The previous values that end with 1 are for delete and create operations.			

Datafilling table RDTLT (Sheet 4 of 9)

Field	Subfield or refinement	Entry	Description
		I_DEL_IPT_ REQ	Send message: `DELETE ISDN PT AND ALL SUBTENDING OBJECTS`
		I_DEL_IPT_ REQ1	Send message: `DELETE ISDN PT AND ALL SUBTENDING OBJECTS`
		I_DEL_IPT_ CONF1	Waits for response to message: `DELETE PT AND ALL SUBTENDING OBJECTS`
		I_DEL_IPT_ REQ	Send message: `DELETE ISDN PT AND ALL SUBTENDING OBJECTS`
		I_DEL_IPT_ REQ1	Send message: `DELETE ISDN PT AND ALL SUBTENDING OBJECTS`
		I_DEL_LT_ CONF	Waits for response to message: `DELETE LT AND ALL SUBTENDING OBJECTS`
		I_DEL_LT_ CONF1	Waits for response to message: `DELETE LT AND ALL SUBTENDING OBJECTS`
		I_DEL_LT_ REQ	Send message: `DELETE ISDN LT AND ALL SUBTENDING OBJECTS`
		I_DEL_LT_ REQ1	Send message: `DELETE ISDN LT AND ALL SUBTENDING OBJECTS`
		P_ACCESS_ DONE	Line objects provisioning for analog or electronic business set (EBS) line complete.

Note: The previous values that end with 1 are for delete and create operations.

TR-303 Generic Interface (continued)

Datafilling table RDTLT (Sheet 5 of 9)

Field	Subfield or refinement	Entry	Description
		P_CHA_LTIS_CONF	Waits for response to message: CHANGE PRIMARY STATE OF LINE TO IN SERVICE
		P_CHA_LTIS_REQ	Send message: CHANGE PRIMARY STATE OF LINE TO IN SERVICE
		P_CHA_LTOOS_CONF	Waits for response to message: CHANGE PRIMARY STATE OF LINE TO OUT OF SERVICE
		P_CHA_LTOOS_CONF1	Waits for response to message: CHANGE PRIMARY STATE OF LINE TO OUT OF SERVICE
		P_CHA_LTOOS_REQ	Send message: CHANGE PRIMARY STATE OF LINE TO OUT OF SERVICE
		P_CHA_LTOOS_REQ1	Send message: CHANGE PRIMARY STATE OF LINE TO OUT OF SERVICE
		P_CRE_LT_CONF	Waits for response to message: CREATE ANALOG OR EBS LT OBJECT
		P_CRE_LT_REQ	Send message: CREATE ANALOG OR EBS LINE TERMINATION (LT) OBJECT
		P_DEL_LT_CONF	Waits for response to message: DELETE LT AND ALL SUBTENDING OBJECTS
		P_DEL_LT_CONF1	Waits for response to message: DELETE LT AND ALL SUBTENDING OBJECTS

Note: The previous values that end with 1 are for delete and create operations.

Datafilling table RDTLT (Sheet 6 of 9)

Field	Subfield or refinement	Entry	Description
		P_DEL_LT_ REQ	Send message: `DELETE LT AND ALL SUBTENDTING OBJECTS`
		P_DEL_LT_ REQ1	Send message: `DELETE LT AND ALL SUBTENDTING OBJECTS`
		P_MOD_LT_ CONF	Waits for response to message: `MODIFY LT OBJECTS`
		P_MOD_LT_ REQ	Send message: `MODIFY ANALOG OR EBS LINE TERMINATION OBJECT`
TRANSP		refer to the following description	Rdt line processor transport states. This field identifies the next operation that the line provisioning process performs for the creation the objects for the transport part of the cross-connect.
		TRANSP_NIL	Operations are not required.
		TRANSP_ DONE	Operations are complete.
		I_ADD_TDPT_ CONF	Waits for response to message: `UPDATE DS-0 CT OBJECT`
		I_ADD_TDPT_ REQ	Send message: `UPDATE TRANSPORT SIDE DS-0 CT OBJECT TO INCLUDE DS0 PT OBJECT`
		I_CHA_ TDPTIS_ CONF	Waits for response to message: `CHANGE PRIMARY STATE OF DS-0 PT TO OUT OF SERVICE`
Note: The previous values that end with 1 are for delete and create operations.			

TR-303 Generic Interface (continued)

Datafilling table RDTLT (Sheet 7 of 9)

Field	Subfield or refinement	Entry	Description
		I_CHA_ TDPTIS_REQ	Send message: `CHANGE PRIMARY STATE OF DS-0 PT OBJECT TO IN SERVICE`
		I_CHA_ XCOOS_ CONF1	Not in use.
		I_CHA_ XCOOS_ REQ1	Not in use.
		I_CRE_TDPT_ CONF	Waits for response to message: `CREATE DS-0 PT OBJECT`
		I_CRE_TDPT_ REQ	Send message: `CREATE TRANSPORT SIDE DS-0 PATH TERMINATION (PT) OBJECT`
		I_CRE_ TQDCT_ CONF	Waits for response to message: `CREATE QDS-0 CT OBJECT`
		I_CRE_ TQDCT_REQ	Send message: `CREATE TRANSPORT SIDE QDS-0 CT OBJECT`
		I_CRE_XC_ CONF	Waits for response to message: `CROSS CONNECTION OBJECT`
		I_CRE_XC_ REQ	Send message: `CREATE TRANSPORT SIDE CROSS CONNECTION OBJECT`
		I_DEL_TDPT_ CONF	Waits for response to message: `DELETE DS-0 PT OBJECT`
		I_DEL_TDPT_ REQ	Send message: `DELETE DS-0 PT OBJECT`
Note: The previous values that end with 1 are for delete and create operations.			

Datafilling table RDTLT (Sheet 8 of 9)

Field	Subfield or refinement	Entry	Description
		I_DEL_TQDCT_CONF	Waits for response to message: `DELETE QDS-0 CT OBJECT`
		I_DEL_TQDCT_CONF1	Waits for response to message: `DELETE QDS-0 CT OBJECT`
		I_DEL_TQDCT_REQ	Send message: `DELETE QDS-0 CT OBJECT`
		I_DEL_TQDCT_REQ1	Send message: `DELETE QDS-0 CT OBJECT`
		I_DEL_XC_CONF	Waits for response to message: `DELETE CROSS CONNECTION OBJECT`
		I_DEL_XC_CONF1	Waits for response to message: `DELETE CROSS CONNECTION OBJECT`
		I_DEL_XC_REQ	Send message: `DELETE CROSS CONNECTION OBJECT`
		I_DEL_XC_REQ1	Send message: `DELETE CROSS CONNECTION OBJECT`
CONTMARK		+ or $	Enter + if additional information for this tuple is in the next record. In other occurrences, enter $ to indicate the end of the tuple.
REQUESTR		refer to following description	Requesting process. This field allows table control to display the process that uses RDTLT resources. The information that follows does allow the table control software to determine the start of the request.
		REQUESTOR_NIL	No requestor

Note: The previous values that end with 1 are for delete and create operations.

TR-303 Generic Interface (continued)

Datafilling table RDTLT (Sheet 9 of 9)

Field	Subfield or refinement	Entry	Description
		REQUESTOR_ RDTLP	Request originates from RDTLP process.
		REQUESTOR_ DUMPREST	Request originates from dump and restore process.
		REQUESTOR_ JFILE	Request initiated from journal file update process.
CRV		0 to 4095	Call reference value range. This field represents the call reference value range.
LOPDONE		Y or N	Line object provisioning done. This field is set to Y (yes) when line object provisioning is complete.
DELALL		Y or N	Delete every tuple. This field is set to Y (yes) when the table control software accepts a request to delete every entry in table RDTLT.
LTIS		Y or N	Line termination in-service. This field is set to Y (yes) when the line termination object (LTO) is in service.
INSMOD		Y or N	In service modifier. This field is Y to identify if the system sends a request to update the in service attributes of the LTO.
Note: The previous values that end with 1 are for delete and create operations.			

Datafill example for table RDTLT

Sample datafill for table RDTLT appears in the following example.

MAP example for table RDTLT

```
RDTLTKEY     ACCESS           TRANSP      NAILUP1
NAILUP2
REQUESTR         CRV   LOPDONE   DELALL   LTIS   INSMOD
   LTCLASS      QDS0INFO     XCINFO
-------------------------------------------------------
CARY 03 0 2 1  P_ACCESS_DONE  TRANSP_NIL  NAILUP_NIL
NAILUP_NIL
REQUESTR_NIL      201    Y        N        Y      N
   ANALOG_LT    0 0 0         0 0
```

Datafilling table LENLINES

Table LENLINES contains the following data:

- site name assigned to remote location
- party to which DN is assigned
- ringing code assigned to a DN

Note: Add an RDT-related tuple in this table if the CARDCODE field in table LNINV is RDTLSG, RDTCON, RDTMBS, or RDTMPY.

Datafilling table SCGRP

Table scan group (SCGRP) lists the PEC and location of scan groups that provide scan points for line features. Each scan card provides 14 scan points that divide in two scan groups. Each scan group is assigned to a TM circuit number.

Note: Lines at a remote location must be assigned to scan points that belong to scan groups at the remote location.

TR-303 Generic Interface (continued)

Datafill for TR-303 Generic Interface for table SCGRP appears in the following table. Fields that apply directly to TR-303 Generic Interface appear in this table.

Datafilling table SCGRP

Field	Subfield or refinement	Entry	Description
SCGRPNO		0-511	Scan group. Enter the scan group number.
TMTYPE		MTM, RMM, or RSM	Trunk module type. Enter the type of trunk module where the miscellaneous scan card is mounted.
TMNO		0-255	Trunk module number. Enter the number assigned to the MTM, RMM, or RSM where the miscellaneous scan card is mounted.
TMCKTNO		0-23	Trunk module circuit number. Enter the trunk module circuit number on the MTM, RMM or RSM, the scan group is assigned.
CARDCODE		0X10AA	Enter the PEC of the scan card.

Datafill example for table SCGRP

Sample datafill for table SCGRP appears in the following example.

MAP example for table SCGRP

```
SCGRPNO    TMTYPE    TMNO    TMCKTNO     CARDCODE
-------------------------------------------------
      0       MTM       1         14       0X10AA
      1       MTM       1         15       0X10AA
      2       RSM       1         12       0X10AA
      3       RSM       1         13       0X10AA
```

Datafilling table SDGRP

Table signal distributor group (SDGRP) list the PEC and location of SD groups that provide SD points for line features. Each SD card provides 14 SD points that divide in two SD groups. Each SD group is assigned to a TM circuit number.

Note: Lines at a remote location must be assigned to SD points that belong to SD groups at the remote location.

Table SDGRP requires datafill to set up the mechanized loop tests of RDT subscriber lines. This table defines the SD groups used in mechanized loop tests. Table LTDSD defines the SD points that drive the applique circuit used in mechanized loop tests.

Datafill for TR-303 Generic Interface for table SDGRP appears in the following table. Fields that apply directly to TR-303 Generic Interface appear in this table.

Datafilling table SDGRP

Field	Subfield or refinement	Entry	Description
SDGRPNO		0-511	Signal distributor group. Enter the signal distributor group number.
TMTYPE		MTM, RMM or RSM	Trunk module type. Enter the type of trunk module when the signal distributor card is mounted.
TMNO		0-2047	Trunk module number. Enter the number assigned to the MTM, RMM or RSM the signal distributor card is mounted.
TMCKTNO		0-29	Trunk module circuit number. Enter the trunk module circuit number on the MTM, RMM, or RSM, the signal distributor group is assigned.
CARDCODE		2X57AA	Cardcode. Enter the PEC of the signal distributor card.

Datafill example for table SDGRP

Sample datafill for table SDGRP appears in the following example.

MAP example for table SDGRP

```
SDGRPNO    TMTYPE    TMNO    TMCKTNO     CARDCODE
------------------------------------------------
      0       MTM       0         14       2X57AA
      1       MTM       0         15       2X57AA
      2       RSM       0         14       2X57AA
      3       RSM       0         15       2X57AA
```

Datafilling table LTDSD

Table line test desk signal distribution (LTDSD) identifies the SD points that drive the applique circuit during mechanized loop tests. The applique circuit,

TR-303 Generic Interface (continued)

used with a NT2X90AD test trunk, reports line card diagnostic results to mechanized loop testing equipment. This equipment includes a mechanized loop tester or local test desk.

The applique circuit uses four SD points. These points belong to one or more SD groups that table SDGRP defines. Enter data in this table before you enter data in table LTDSD. The SD points need not belong to the same SD group.

Enter data in table LTDS after table TRKMEM. Table TRKMEM is a key identification for table LTDSD. Valid trunk group members belong to trunk group type test desk (TD), version MLT or TSTDK.

Datafill for TR-303 Generic Interface for table LTDSD appears in the following table. Fields that apply directly to TR-303 Generic Interface appear in this table.

Datafilling table LTDSD (Sheet 1 of 2)

Field	Subfield or refinement	Entry	Description
TDMEM		refer to subfields	Trunk member. This field consists of subfields CLLI and MEMNAME.
	CLLI	alphanumeric	Common language location identifier. Enter the code assigned in table CLLI.
	MEMNAME	0-9999	Trunk member name. Enter the trunk member that uses the SD circuit card.
TDSDGRP1		0-511	Test desk signal distribution group 1. Enter the SD group where the first SD point belongs.
TDSDPT1		0-6	Test desk signal distribution point 1. Enter the number of the first SD point that drives relay DS-1 in the applique circuit.
TDSDGRP2		0-511	Test desk signal distribution group 2. Enter the SD group to which the second SD point belongs.
TDSDPT2		0-6	Test desk signal distribution point 2. Enter the number of the second SD point that drives the relay DS2 in the applique circuit.
TDSDGRO3		0-511	Test desk signal distribution group 3. Enter the SD group where the third SD point belongs.

Datafilling table LTDSD (Sheet 2 of 2)

Field	Subfield or refinement	Entry	Description
TDSDPT3		0-6	Test desk signal distribution point 3. Enter the number of the third SD point that drives relay DS3 in the applique circuit.
TDSDGRP4		0-511	Test desk signal distribution group 4. Enter the SD group where the fourth SD point belongs.
TDSDPT4		0-6	Test desk signal distribution point 4. Enter the number of the fourth SD point that drives relay DS4 in the applique circuit.

Datafill example for table LTDSD

Sample datafill for table LTDSD appears in the following example.

MAP example for table LTDSD

```
TDMEM TDSDGRP1 TDSDPT1 TDSDGRP2 TDSDPT2 TDSDGRP3 TDSDPT3
 TDSDGRP4 TDSDPT4
------------------------------------------------------
MLTTRK 1     6       5        6       6        7       0
         7       1
```

Datafilling table MTAMDRVE

Table metallic test access minibar driver (MTAMDRVE) is a matrix of vertical and horizontal crosspoints, like a minibar circuit. This matrix connects specified verticals to horizontals in the network.

The MTA connects test equipment. The equipment connects to a horizontal crosspoint, to a circuit that requires testing through a test bypass pair. The bypass pair connects to a vertical crosspoint.

The interconnection of a number of smaller minibar circuits can construct an MTA network of the required size. These circuits are used as building block parts. Refer to the following figure.

The NT3X09AA driver allows metallic test access to remote line concentrating devices, like the RDT. The NT3X09AA is a four vertical-by-eight horizontal circuit. The NT3X09BA is an eight vertical-by-eight horizontal circuit.

TR-303 Generic Interface (continued)

MTA matrix

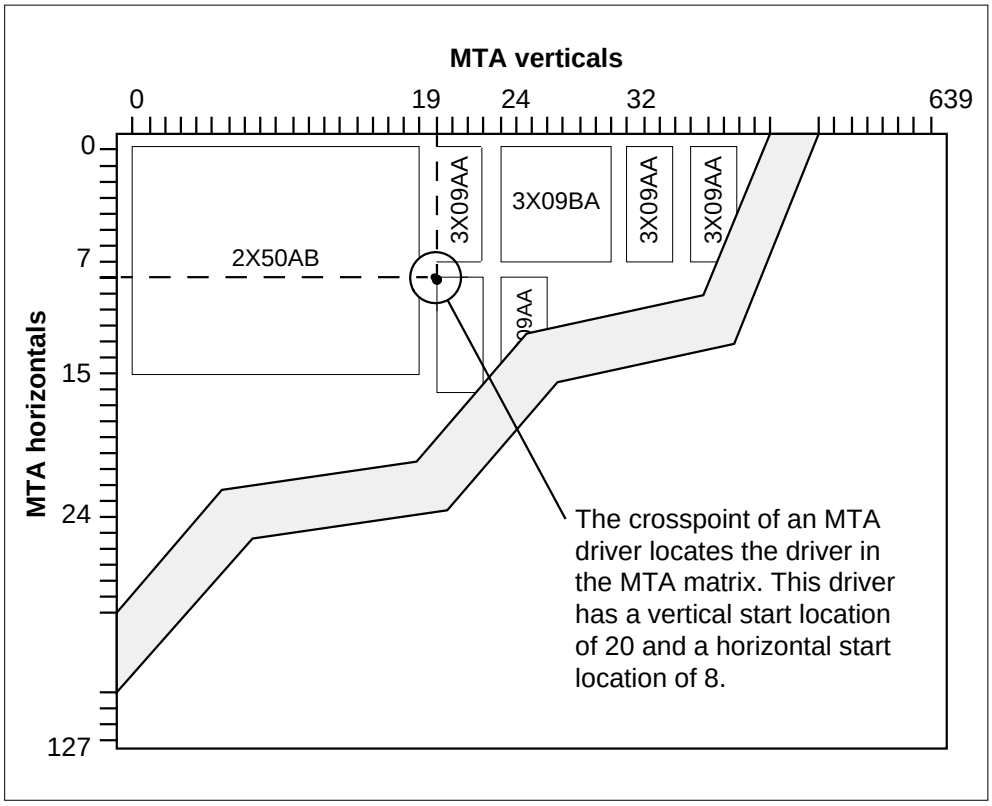

Table MTAMDRVE specifies the location and the type of MTA. The NT3X09 driver has relays on the card and does not require an associated minibar switch. A 0 identifies each MTA, 0 crosspoint in the matrix.

The following figures correspond to the MTA datafill examples at the end of this chapter.

Multiple RDTs on one test bypass pair

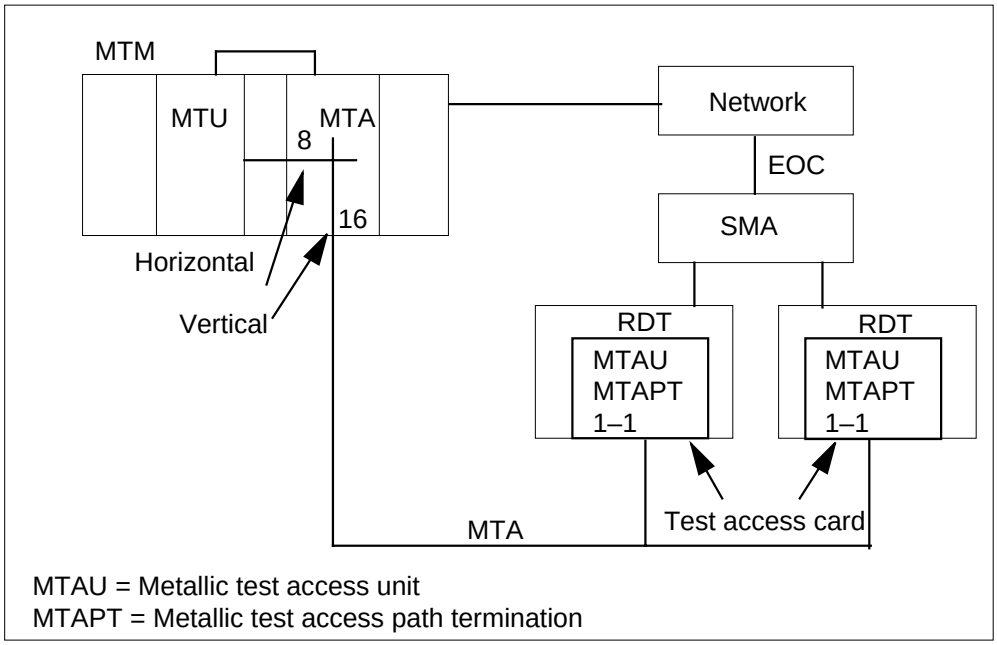

MTAU = Metallic test access unit
MTAPT = Metallic test access path termination

Metallic test bypass for one RDT

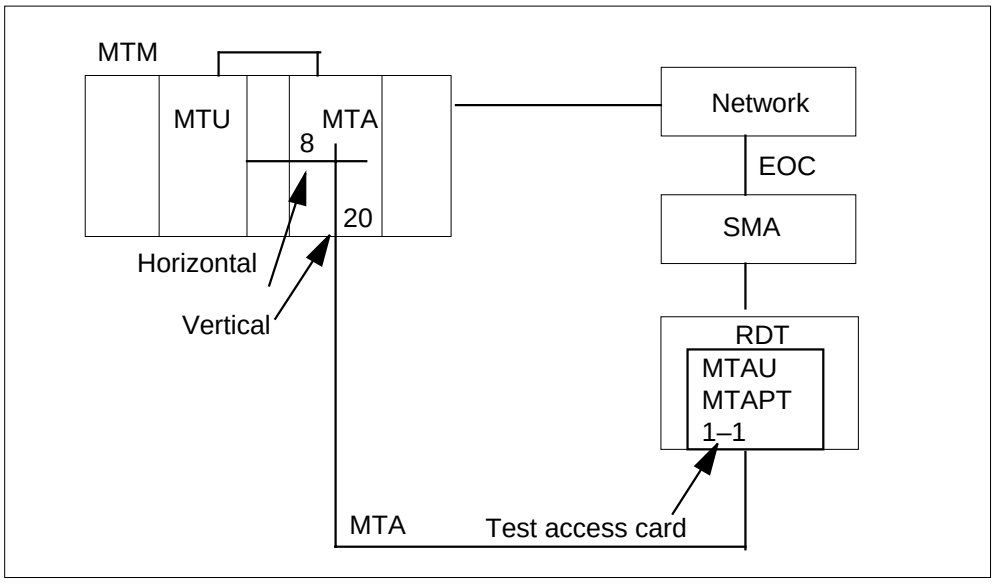

TR-303 Generic Interface (continued)

Datafill for TR-303 Generic Interface for table MTAMDRVE appears in the following table. Fields that apply directly to TR-303 Generic Interface appear in this table.

Datafilling table MTAMDRVE

Field	Subfield or refinement	Entry	Description
MTAMEM		0-255	Metallic test access minibar driver member. Enter the MTA driver member number. This field is the key to this table.
VERT		0-639	MTAM driver vertical start location. Enter the vertical start location for the MTAM driver.
HORIZ		0-127	MTAM driver horizontal start location. Enter the horizontal start location for the MTAM driver.
TMTYPE		MTM	Trunk module type. Enter the type of trunk module where the MTA is mounted.
TMNO		0-255	Trunk module number. Enter the number assigned to the maintenance trunk module.
TMCKTNO		0-28 (even numbers)	Trunk module circuit number. Enter the circuit number of the MTM where the MTA is assigned.
MTACARD		2X50AB, 3X09AA, or 3X09BA	MTAM driver card. Enter the card code for the MTA card.

Datafill example for table MTAMDRVE

Sample datafill for table MTAMDRVE appears in the following example.

MAP example for table MTAMDRVE

```
MTAMEM  VERT HORIZ     TMTYPE  TMNO TMCKTNO  MTACARD
------------------------------------------------------
    1     20    8        MTM     1      10   3X09BA
```

Datafilling table MTAVERT

Table metallic test access vertical connection (MTAVERT) identifies the vertical connectivity to the MTA matrix. Table MTAVERT is modified so that one or two verticals can be entered for one or more RDTs.

Two types of connections can occur: single and multiple. The SMA system uses the multiple connection. A maximum of 32 RDTs can share a metallic test pair.

Datafill for TR-303 Generic Interface for table MTAMDRVE appears in the following table. Fields that apply directly to TR-303 Generic Interface appear in this table.

Datafilling table MTAVERT

Field	Subfield or refinement	Entry	Description
VERT		0-1023	Vertical. Enter the MTA vertical connection number.
VERTCONN		S or M	Vertical connection. Enter S or M to indicate single or multiple connections. For multiple connections, a maximum of 32 RDTs can share a metallic test pair.
SELECTOR		O or L	Selector. When selector O is used, the entry in VERTCONN is M. Enter data in the subfields SITE, FRAME, and UNIT after the selector. This field is a vector of a maximum of 32 entries. When L is used, the entry in VERTCONN is S. Enter data in subfields SITE, FRAME, and UNIT.
	SITE	alphanumeric	Site. Enter the name for the remote location.
	FRAME	0-511	Frame. Enter the frame number.
	UNIT	0-9	Unit number. Enter the unit number.
	CONTMARK	+ or $	Continuation mark: Enter a plus sign (+) when additional data is specified on the next record. In other occurrences, enter a dollar sign ($) after last record.

Datafill example for table MTAVERT

Sample datafill for table MTAVERT appears in the following example.

TR-303 Generic Interface (continued)

MAP example for table MTAVERT

```
VERT                                                  VERTCONN
-------------------------------------------------------
16                      M (O RDT1 00 0 )  (O RDT1 01 0)
17                                      S (O RDT1 02 0 )
18                                      S (O RDT1 03 0 )
19                                      S (L RDT1 04 0 )
```

Datafilling table MTAHORIZ

Table metallic test access horizontal connection (MTAHORIZ) lists the assignment of horizontal agents to a horizontal and horizontal group of metallic test access minibars. Horizontal agents include metallic test units (MTU), operator verification, metallic jacks (MJACK), incoming test access trunks, extended metallic test access, and short circuits.

Different horizontal agents can use the same horizontal but must associate with different metallic test access minibars or horizontal groups. A maximum of 160 different horizontal agents is allowed for a specified horizontal.

A maximum of 32 MTAMs can group to connect to a single horizontal agent. A horizontal agent can be used one time.

When an LTU is assigned to the host switching unit, the horizontal where the LTU is assigned multiplies to every minibar switch. This switch is assigned to the host switching unit.

When an LTU is assigned to a remote location, the horizontal where the LTU is assigned multiplies to every minibar switch assigned. This switch is assigned to the remote location.

When the minibar switch is at the host switching unit, an assignment limit is not present for the assignment. This assignment includes incoming test and operator verification trunks. One horizontal is required for each incoming test access trunk and operator verification trunk.

Where the MTA configuration is small or medium, the horizontals are multiplied to all minibar switches located at the host switching unit. These horizontals are located where the incoming test access and operator verification trunks are assigned.

When the minibar switch is remote from the host switching unit, every horizontal is available for several functions. The horizontals are available for

the assignment of incoming test access trunks, operator verification trunks, and for the extension of metallic test access feature.

One horizontal is a requirement for each incoming test access trunk. One horizontal is also a requirement for operator verification trunk. One vertical on the host minibar switch assigned to a horizontal is at the remote or host location.

The number of metallic jacks in each DMS switch is restricted to 256.

Assign LTUs, incoming test access, and operator verification trunks, to trunk group, trunk subgroup, and trunk member tables. To perform this action, refer to tables TRKGRP, TRKSGRP, and TRKMEM in the order given.

Enter an MTU in table TRKMEM before you add to table MTAHORIZ. If deletion of the MTU occurs from table TRKMEM, the related tuple in table MTAHORIZ is marked as deleted. The tuple is automatically restored if the addition of the MTU occurs to table TRKMEM.

The memory for this table is dynamically allocated a maximum of 2000 tuples.

The MTU replaces the LTU. When you enter data for an LTU, a warning can appear at the MAP terminal. The warning states that the correct datafill is MTU.

Datafill for TR-303 Generic Interface for table MTAHORIZ appears in the following table. Fields that apply directly to TR-303 Generic Interface appear in this table.

Datafilling table MTAHORIZ (Sheet 1 of 3)

Field	Subfield or refinement	Entry	Description
HORIZ		0-127	MTA horizontal. Enter the MTA horizontal where the test equipment (horizontal agent) connects.
HORIZGRP		0-159	MTA horizontal group. Enter the horizontal group number that identifies the horizontal and the horizontal agent as a different tuple. The horizontal group allows assignment of different test equipment on the same MTA horizontal.

TR-303 Generic Interface (continued)

Datafilling table MTAHORIZ (Sheet 2 of 3)

Field	Subfield or refinement	Entry	Description
HORIZAGT		refer to subfields	Horizontal agent. This field contains several subfields. The value of SELECTOR in use determines which subfields the field contains.
	SELECTOR	S, L, T, B, E, MJ, J, and LA	Selector. Enter S for a timed short circuit. Enter L for LTU or MTU assignment, and complete subfields CLLI, EXTRKNM, and ALTUSE. Enter T for incoming test access or operator verification trunk assignment and complete subfields CLLI and EXTRKNM. Enter B for a board-to-board dedicated horizontal, and complete subfield BBTNR. Enter E to multiply a horizontal of a minibar switch. This multiplication occurs from a host or remote to the vertical of a host minibar switch. Complete subfield EMTAVERT. Enter MJ for metallic connection to the tip and ring of the subscriber line. Complete subfields CLLI and MJACKNUM. Selectors J and LA are for licensee use.
	CLLI	LTU, MTU, MJACK, or alphanumeric	Common language location identifier. Enter LTU for line test unit. Enter MTU for metallic test unit. For operator verification or an incoming test access trunk, enter the alphanumeric code that represents this trunk group in table CLLI. Enter MJACK for metallic jack.
	EXTRKNM	0-9999	External trunk number. Enter the external trunk number in table TRKMEM. The number is assigned to the line test unit, metallic test unit, operator verification trunk, or the incoming test access trunk.
	ALTUSE	Y or N	Automatic line test use. Enter Y to use line test equipment for automatic line testing (ALT). In other occurrences, enter N.

Datafilling table MTAHORIZ (Sheet 3 of 3)

Field	Subfield or refinement	Entry	Description
	BBTNR	0-7	Board-to-board testing number. Enter the number of the board-to-board set where this horizontal associates.
	EMTAVERT	0-639	Extended metallic test access column. Enter the associated vertical on the MTA in the host where the horizontal connects.
	MJACKNUM	1-256	Metallic jack number. Where the entry in subfield CLLI is MJACK, enter the metallic jack number.
MTAGRP		numeric	MTA group. This field consists of a list of MTA drivers that multiply to the test equipment. This field is a vector of a maximum of 32 multiples of subfields MTAMEM and HORIZ.
	MTAMEM	0-255	MTA minibar driver member. Enter the MTAM driver member number where the horizontal connects.
	HORIZ	0	This field is read-only This field provides information about the horizontal to which the MTA drivers connect. Enter 0 to satisfy table control.
	CONTMARK	+ or $	Continuation mark. Enter a plus sign (+) when additional data is specified on the next record. In other occurrences, enter a dollar sign ($) after the last record.

Datafill example for table MTAHORIZ

Sample datafill for table MTAVERT appears in the following example.

MAP example for table MTAHORIZ

```
HORIZ      HORIZGRP          HORIZAGT          MTAGRP
-------------------------------------------------
8      0       L          MTU   0 Y   ( 0 0) ( 2 0)$
```

Datafilling table AMAOPTS

Table AMA options (AMAOPTS) controls the activation and scheduling of the recording options for automatic message accounting (AMA). Table

TR-303 Generic Interface (continued)

AMAOPTS contains one tuple for each option. The table first contains the default values for each option.

Datafill for the TR-303 Generic Interface for AMAOPTS appears in the following table. Fields that apply directly to TR-303 Generic Interface appear in this table.

Datafilling table AMAOPTS

Field	Subfield or refinement	Entry	Description
OPTION			Option. This field consists of subfield AMAOPT.
	AMAOPT	alphanumeric	AMA option. Enter the appropriate option for your application.
SCHEDULE			Schedule. This field consists of many subfields. Subfield AMASEL appears in this table.
	AMASEL	PERIODIC, OFF, or DEFAULT	AMA selector. Enter the appropriate AMA selector for your application. ***Note:*** To enable the DSCWID conference audit, AMASEL must be set to PERIODIC, or DEFAULT where the DEFAULT is PERIODIC.

Datafill example for table AMAOPTS

Sample datafill for table AMAOPTS appears in the following example.

MAP example for table AMAOPTS

```
>POS DSCWID_CONF_AUDIT
DSCWID_CONF_AUDIT
>CHA
TUPLE TO BE CHANGED:
DSCWID_CONF_AUDIT OFF
ENTER Y TO CONFIRM, N TO REJECT, OR E TO EDIT
>E
AMASEL: OFF
>PERIODIC
ONDATE:
>940915
ONTIME:
>0000
SCHEDULE:
>24 HRS
TUPLE TO BE CHANGED:
DSCWID_CONF_AUDIT PERIODIC 940915 0000 24  HRS
ENTER Y TO CONFIRM, N TO REJECT, OR E TO EDIT
Y
```

Datafilling table TEXTPHRS

Virtual screen list editing (VSLE) and other display features use table text phrases (TEXTPHRS). This table contains instructional and prompt text strings that comprise separate logical display phrases.

Datafill for TR-303 Generic Interface for TEXTPHRS appears in the following table. Fields that apply directly to TR-303 Generic Interface appear in this table.

Datafilling table TEXTPHRS (Sheet 1 of 2)

Field	Subfield or refinement	Entry	Description
PHRSNAME		alphanumeric	Phrase name. Enter the 2 to 8 character name of the phrase.
PHRASE		alphanumeric	Phrase. Enter the test string that appears to the user as instructional or prompt messages. This field is a vector of a maximum of 40 characters. Twenty characters can appear on the MAP terminal at a time.

TR-303 Generic Interface (continued)

Datafilling table TEXTPHRS (Sheet 2 of 2)

Field	Subfield or refinement	Entry	Description
HLMODE		refer to subfields	High light mode. This field contains subfields POSITION and MODE. A maximum of four highlight modes can be defined. Each mode consists of a position and a mode.
	POSITION	0 to 40	POSITION. Specifies the character position of the change in highlight mode. The characters specified in this subfield are in HLMODE. The selected mode determines which characters are in HLMODE. The characters continue until the end of the display, or until the next mode position is specified.
	MODE	Normal, Reverse, Grey, or Bold	MODE Enter the desired mode. The default mode is NORMAL.

Datafill example for table TEXTPHRS

Sample datafill for table TEXTPHRS appears in the following example.

MAP example for table TEXTPHRS

```
PHRSNAME                          PHRASE     HLMODE
------------------------------------------------
CLCOUNT           GENERIC_CALLOG_ITEM_COUNT  $
CLNEWCT            GENERIC_CALLOG_NEW_COUNT  $
CLTITLE                 CALL_LOGGING_SERVICE  $
```

Datafilling table TEXTLOG

The VSLE and other display features use table logical display text (TEXTLOG). Table TEXTLOG contains the names of the phrases that comprise a logical display phrase.

TR-303 Generic Interface (continued)

Datafill for TR-303 Generic Interface for table TEXTLOG appears in the following table. Fields that apply directly to TR-303 Generic Interface appear in this table.

Datafilling table TEXTLOG (Sheet 1 of 2)

Field	Subfield or refinement	Entry	Description
LPHRSKEY		refer to subfields	Logical phrase key. Contains subfields application name, language, and display number.
	APPLNAME	VSLE, or CALLOG	Application name. Enter the name of the feature application this tuple uses. Enter visual screen list editing (VSLE), or call logging (CALLOG).
	LANGUAGE	NILANG, LANG1, or LANG2	Language. Enter the language used for the display. The NILANG indicates no language.
	DISPNUM	0 to 127	Display number. Enter the numeric index the feature application identifies the display data in the tuple.
DISPTYPE		S, T, or C	Display type. Enter S for standard display. This display type is used to wait for softkey input from the user. Softkeys and instructions appear at the MAP display. Enter T for transient display. This display type provides an information display that indicates results of your actions where input is not allowed. Enter C for cursor control display. This display type provides instructions. Softkeys used to wait for softkey or dual tone multi-frequency (DTMF) keypad input appear at the display.
LRCI		CENTER, RIGHT, LEFT, or INDENT	Left, right, center, indent. This field is the display justification indicator field. Enter the desired mode of justification.
PHRSLIST		2 to 8 alphanumeric characters	Phrase list. Enter the list to a maximum of 16 phrase names as table TEXTPHRS defines. The phrase names comprise a single logical display phrase. The phrase names must already be in table TEXTPHRS.

TR-303 Generic Interface (continued)

Datafilling table TEXTLOG (Sheet 2 of 2)

Field	Subfield or refinement	Entry	Description
DEFNLIST		refer to subfields	Definer list. Contains subfields SOFTKEY, MODE, and SKT. This field contains a vector of a maximum of 8 softkey definer lists.
	SOFTKEY	1 to 33	SOFTKEY. Subfield SOFTKEY is the softkey definer number from the list of softkey definer numbers in field DEFNUM of table SOFTKEY. The integer 1 is reserved internally so that a softkey that is not used can be left blank.
	MODE	N, H	MODE. Subfield MODE is set to normal (N) or highlight (H).
	SKT	SRV or CPE	Softkey table. Subfield SKT indicates which softkey table is loaded in the CPE. Enter server (SRV) or customer premises equipment (CPE).

Datafill example for table TEXTLOG

Sample datafill for table TEXTLOG appears in the following example.

MAP example for table TEXTLOG

```
         LPHRSKEY  DISPTYPE  LRCI
                        PHRSLIST
                            DEFNLIST
-------------------------------------------------
CALLOG  LANG1     1     S  LEFT
                          (CLTITLE) $
                          (2 N SRV) $
```

Datafilling table SOFTKEY

Table SOFTKEY specifies softkey information for application services. The index to table SOFTKEY is an application service identifier, and a softkey definer number. Table TEXTLOG references entries in table SOFTKEY.

TR-303 Generic Interface (continued)

Datafill for TR-303 Generic Interface for table SOFTKEY appears in the following table. Fields that apply directly to TR-303 Generic Interface also appear in this table.

How to enter data in table SOFTKEY

Field	Subfield or refinement	Entry	Description
SERVID		alphanumeric	Service identifier. Enter a character string that corresponds to a specified application. This field is a vector of a maximum of 8 characters.
DEFNUM		2 to 33	Defining numbers. Enter a numeric value to identify a softkey definer for use with the specified application.
LLABEL		alphanumeric	Label. Enter the label that appears on the CPE set display. This label appears on the line above the softkeys. This field is a vector of a maximum of 18 characters.
SLABEL		alphanumeric	Subset of label. Enter a string of characters that corresponds to the characters in the long label that are not optional. These characters appear on CPE sets that cannot display long labels. This field is a vector of a maximum of 7 characters.
RETURN		0-255	Return. Enter the character string that returns to the DMS switch when a user presses the corresponding softkey. This field is a vector of a maximum of 14 characters.

Datafill example for table SOFTKEY

Sample datafill for table SOFTKEY appears in the following example.

TR-303 Generic Interface (continued)

MAP example for table SOFTKEY

```
SERVID   DEFNUM     LLABEL
                  SLABEL
                                                    RETURN
-------------------------------------------------------
CALLOG     4          TOP
                      TOP
                                                      $
CPE1       5           SOFTK02
                     SK02
                                 (48) (50) (39) (78)  $
CPE2       6          SOFTK03
                    SK03
                                 (48) (51) (39) (78)  $
```

Datafilling table DSCWDTYP

Table deluxe spontaneous call waiting types (DSCWDTYP) defines different DSCWID types. Table DSCWDTYP has a limited size of a maximum of 20 tuples. Six tuples are first entered in this table with keys PROPRITY, ADSITIME, ADSICID, NODATA, NOCIDCW, and COMPLETE. The PROPRITY key is used to indicate Proprietary DSCWID. Operating company personnel cannot change or delete the PROPRITY tuple. The only table control function permitted on the other five tuples is the change command. Operating company personnel can define a maximum of 14 additional DSCWID types. When the system creates a new tuple, you cannot change the NAME field. Operating company personnel can remove or delete a tuple from table DSCWDTYP when field COUNT is set to zero. Operating company personnel cannot change field COUNT.

TR-303 Generic Interface (continued)

Datafill for TR-303 Generic Interface for table DSCWDTYP appear in the following table. Fields that apply to the DSCWID feature of TR-303 Generic Interface also appear in this table.

Note: Enter data in table DSCWDTYP before you define the DSCWID type in table RESOFC.

Datafilling table DSCWDTYP (Sheet 1 of 2)

Field	Subfield or refinement	Entry	Description
NAME		PROPRITY ADSITIME, ADSICID, NODATA, NOCIDCW, or COMPLETE	DSCWDTYP table key. Enter the name assigned to each DSCWID type. This field consists of a maximum of 8 characters. ***Note:*** The PROPRITY tuple is fixed to accommodate the proprietary DSCWID feature.
ALERT		SASONLY or SASCAS	Type of alerting tone. Enter the type of alerting supplied.
CID		NOCID, ALLCID, or TIMECID	Caller ID delivery. Enter the type of CID from the DSCWID session. Options are no data (NOCID), all data of CID type (ALLCID), delivery time and date only (TIMECID).
NONADSI		Y or N	Non ASDI. This field permits DSCWID features to be assigned to non-ADSI sets. When set to N, non-ADSI sets can signal ANSWER and RETURN softkey options. When set to Y, non-ADSI sets can signal the softkey options in the KEYOPTS field.

Note 1: Operating company personnel cannot change or delete the PROPRITY tuple and can change (not delete) the other 5 initial tuples.

Note 2: ALERT type must be SASCAS to display ADSI complaint features. The SASONLY alerting type provides a shorter call waiting function and uses less SMA resources for non-ADSI type sets.

Note 3: If CID type is ALLCID, a CID feature must be assigned in table RESOFC.

TR-303 Generic Interface (continued)

Datafilling table DSCWDTYP (Sheet 2 of 2)

Field	Subfield or refinement	Entry	Description
COUNT		0 to 99,999	Line count. This field contains the number of lines assigned this DSCWID type. ***Note:*** Operating company personnel cannot change this field. If the count is 0, personnel can delete tuples from table DSCWDTYP. The default value is 0.
KEYOPTS		ALL, ANSWER, RETRN, FWD, BUSY, HOLD, DROP, CONF, DROPFRST, and DROPLAST	Softkey options. This field contains the softkey options available on this DSCWID type. The default value is ALL. ***Note:*** Make changes to fields with multiple entries in the PROMPT mode.

Note 1: Operating company personnel cannot change or delete the PROPRITY tuple and can change (not delete) the other 5 initial tuples.

Note 2: ALERT type must be SASCAS to display ADSI complaint features. The SASONLY alerting type provides a shorter call waiting function and uses less SMA resources for non-ADSI type sets.

Note 3: If CID type is ALLCID, a CID feature must be assigned in table RESOFC.

Datafill example for table DSCWDTYP.

Sample datafill for table DSCWDTYP appears in the following example.

MAP example for table DSCWDTYP

```
NAME      ALERT    CID  NON  ADSI      COUNT
                                            KEY OPTS
-----------------------------------------------------
PROPRITY  SASCAS   ALLCID      N          0
  (ANSWER)  (FWD)  (BUSY)  (HOLD)  (DROP)  (RETRN) $
ADSITIME  SASCAS  TIMECID      N          0
                                           (ALL) $
ADSICID   SASCAS  ALLCID       N          0
                                           (ALL) $
NODATA    SASONLY  NOCID       Y          0
                                           (ALL) $
NOCIDCW   SASCAS  TIMECID      Y          0
                                           (ALL) $
COMPLETE  SASCAS  ALLCID       Y          0
                                           (ALL) $
```

Tools for verifying translations

The TR-303 Generic Interface does not use tools for verifying translations.

SERVORD

Use SERVORD to add or delete tuples to and from tables LTMAP, IBNLINES, IBNFEAT, LENLINES, LENFEAT, RESFEAT and RESOFC. Do not use the table editor.

Table LTMAP contains information on ISG numbers, the PM type, services, and the allocation of service channels.

CAUTION
Loss of service
Use SERVORD, and not the table editor, to add and delete tuples to and from tables LENLINES, IBNFEAT RESOFC, and RESFEAT. Use the table editor to enter test line, and final line data from tape.

Table IBNLINES contains the line assignments for 500 and 2500 sets assigned to MDC, RES, and multiple appearance directory number (MADN) station numbers.

Note: Enter data in attendant consoles through the table editor in table IBNLINES.

TR-303 Generic Interface (continued)

Table IBNFEAT lists the line features assigned MDC lines in table IBNLINES. Each feature assigned to an MDC line requires one entry.

Note: Use the table editor to load final line data in the switch. Make additions, deletions, and changes to table IBNFEAT through SERVORD.

Table LENLINES contains the following data:

- site name assigned to remote location
- party where the directory number is assigned
- ringing code assigned to a directory number

Use the table editor to enter data in table LENLINES. Use of the table editor can result in the assignment of incompatible features to the line.

Table LENFEAT list the features assigned to a specified line in table LENLINES.

Table RESFEAT contains the assignment of CLASS features for residential lines.

Table RESOFC contains data about CLASS features. The CLASS features are public network features for which the operating company targets the residential market. For each CLASS feature assigned, table RESOFC controls if the system enables or disables the feature for the whole office. If the system disables the feature, CLASS lines cannot use that feature, even if the feature is assigned. Table RESOFC also controls the attributes of each feature.

SERVORD limits

Table CDCLENS lists the LENs assigned to a customer group that have the Customer Service Change feature. The LENs assigned in this table can be assigned in tables INBLINES or KSETINV.

The following SERVORD limits apply to TR-303 Generic Interface.

- rejects attempts to add semi-post paid service to a line on a TR303 RDT.
- removes current restriction for 2FR and 4FR service on a TR303 RDT. The GND equals *no* option is compatible with LCCs of 2FR and 4FR.
- rejects attempts to add 2FR or 4FR service on a TR303 RDT if multiparty card code is not in use
- rejects attempts to add message waiting with lamp option on a TR303 RDT line

TR-303 Generic Interface (continued)

SERVORD prompts

The SERVORD prompts used to add a 1FR line to the TR-303 Generic Interface appear in the following table. Refer to the *Servord Reference Manual* for a complete description of SERVORD command and prompts.

SERVORD prompts for TR-303 Generic Interface

Prompt	Valid input	Explanation
DN	Numeric	Directory number to add
LCC	Alphanumeric	Line class code
LATA- NAME	Alphanumeric	Local access and transport area name
LTG	Numeric	Line treatment group
LEN or LTID	Numeric	Line equipment number or logical terminal id
OPTION	Alphanumeric or $	Option(s) assigned to the line

SERVORD example for adding TR-303 Generic Interface

To add a 1FR line to the TR-303 Generic Interface, through the NEW command, appears in the following SERVORD example.

TR-303 Generic Interface (continued)

SERVORD example for TR-303 Generic Interface in prompt mode

```
>NEW
and pressing the Enter key.

SONUMBER:   NOW 94 5 11 AM
>
and pressing the Enter key.
DN:
> 2790011
and pressing the Enter key.
LCC:
> 1FR
and pressing the Enter key.
LATANAME:
> NILLATA
and pressing the Enter key.
LTG
>0
and pressing the Enter key.
LEN or LTID:
>RDT1 0 0 2 0
and pressing the Enter key.
OPTION
> $
and pressing the Enter key.
```

SERVORD example for TR-303 Generic Interface in no-prompt mode

```
> NEW 2790011 1FR NILLATA 0 RDT1 0 0 2 0 $
```

Correlating a LEN to the CRV

In the previous examples, RDT1 0 0 2 0 corresponds to a call reference value (CRV) of 20. Operating company personnel must view the groups of fields SHELF (RDTLSG) and SLOT (RDTCKT) as the CRV or virtual LENs. The CRV or virtual LENs is a logical number equal to the line circuit.

For example, if field SHELF has entry 3, and field SLOT has entry 4, the RDT LEN represents a CRV of 304. Together, the two fields can take a value of 1-2048. For this value, the RDT SHELF represents the thousands and hundreds columns (the 20 of 2048). The RDT SLOT represents the tens and units columns (the 48 of 2048).

SERVORD examples for adding the DSCWID options to a subscriber line

The application of the DSCWID feature to the SMA with the ADO command appears in the following SERVORD examples. Assume in table RESOFC that:

- The default DSCWID type (DTYPE) is set to ADSITIME.
- The DSCWID conference (AMA) status is set to NONE.
- The DSCWID default treatment (DEFTRMT) is set to FWD.

The following example assigns DSCWID to 621-5000 with the default characteristics of DSCWID type ADSITIME.

MAP example of SERVORD Add Option (ADO) command using defaults

```
SERVORD
SO :
> ADO
SONUMBER : NOW YY MM DD
> $
DN_OR_LEN
> 6215000
OPTION :
> DSCWID
SUBOPT :
> DTYPE
DTYPE :
> ADSICID
SUBOPT :
> DAMA
DAMA :
> CONF
SUBOPT :
> DEFTRMT
DEFTRMT :
> ANNC
SUBOPT :
> $
OPTION :
> $
COMMAND AS ENTERED :
ADO NOW YY MM DD 6215000 (DSCWID (DTYPE ADSICID)
(DAMA NONE) DEFTRMT ANNC ) $ ) $
ENTER Y TO CONFIRM, N TO REJECT, OR E TO EDIT
Y
```

The following example assigns DSCWID to 621-5000 with the characteristics of DSCWID type ADSICID. The AMA recording status is CONF and the default treatment is ANNC.

TR-303 Generic Interface (end)

MAP display of SERVORD Add Option (ADO) command with overrides

```
SERVORD
SO :
> ADO
SONUMBER : NOW YY MM DD
> $
DN_OR_LEN
> 6215000
OPTION :
> DSCWID
SUBOPT :
> $
OPTION :
> $
COMMAND AS ENTERED :
ADO NOW YY MM DD 6215000 (DSCWID $) $
ENTER Y TO CONFIRM, N TO REJECT, OR E TO EDIT
y
```

Error messages for SERVORD

The following SERVORD error messages can occur for the SMA MVI-20.

Error messages for table LENLINES

Error message	Description
`Invalid ringing type in cardinfo field for a TR303 RDT.`	RNGTYPE subfield has data that is not correct for the type of line in which data are entered.
`CSP is not supported by RDTLSG, RDTMPY, RDTCON, or RDTISD line cards.`	Attempt to add semi-post paid service to a TR303 RDT line.
`2FR is not supported for RDTLSG, RDTCON, or RDTISD line cards.`	Multiparty card code not in use.
`4FR is not supported for RDTLSG, RDTCON, or RDTISD line cards.`	Multiparty card code not in use.
`Only 6X19/8D09/RFT RDTLSG card can have MWL notice.`	Attempt to add message waiting option with lamp.

7 Introduction to Star Remote System

Understanding Star Remote System translations

The Star Remote System is part of a family of remote peripherals that allow extended geographic coverage of the Digital Multiplex System (DMS) 100 switch.

Before attempting to datafill the Star Remote System, it is necessary to have a basic understanding of the concepts and terminology of translations. This introduction provides a general description of the Star Remote System and the translations functions with respect to the Star Remote System.

Introduction to the Star Remote System

The Star Remote System accepts up to 16 DS-1 host links at full 1152 line configurations. The Star Remote System provides for traffic volumes of over 10 hundred-call seconds (CCS) and handles extended-periods of Internet and work-at-home calling. Up to 1152 lines can connect to the Star Remote System. All services currently made available in Nortel's remote product line are also available from the Star Remote System. The Star Remote System includes the

- Star Hub - The Star Hub is an improvement in technology and performance at a reduced cost. The Star Hub builds on the following Nortel products:
  - — Remote Line Concentrating Module (RLCM)
  - — outside plant module (OPM)
  - — outside plant access cabinet (OPAC)
- Star Module - The Star Module connects to the Star Hub through one or two DS-1 links. Up to 16 Star Modules, each supporting 64 lines, connect to the Star Hub. The Star Module exists in an outside or an inside cabinet configuration. The operating company can install the outside cabinet on a cement pad, wooden deck, or a telephone pole. The operating company can install the inside cabinet on a wall.

Star Hub introduction

The Star Hub functions like an RLCM in that software, user interface, and functionality are the same. The Star Hub is a remote peripheral that connects

to the SuperNode switch through a line trunk controller with the NTMX77AA unified processor (LTC+). The Star Hub

- supports up to 1152 lines
- has a single control shelf, configured to support up to 18 local line drawers or up to 16 remote line drawers (RLD). Each RLD is in a Star Remote Module Equipment (SRME) wall mounted cabinet or a Star Remote Module Outside (SRMO) cabinet
- provides for integrated services digital network (ISDN) lines when the ISDN line drawer for remotes (ILD-R) is installed where a standard line drawer is installed
- connects to the host office through 2 to 16 DS-1 links
- DMS-100 switch-based operations, administration, maintenance, and provisioning (OAM&P)

The Star Hub is in a standard DMS-100 indoor frame, which is called a Star Remote Hub Equipment (SRHE) frame. The control shelf, frame supervisory panel, and up to three line drawer shelves, each containing up to six line drawers are in the SRHE frame.

The Star Hub provides for up to 1152 lines. The Star Hub uses existing line cards through a maximum of 18 line drawers, of which 16 can be Star Modules. The local line drawer in the Hub is a standard DMS-100 line drawer that supports up to 64 lines.

The Star Hub supports the following types of lines:

- plain old telephone service (POTS)
- custom local area signaling service (CLASS)
- coin
- Meridian Business Set (MBS), also known as proprietary phone (P-phone)

To support ISDN lines, up to six ILD-Rs can be installed.

Star Module introduction

The following components make up the Star Module.

- indoor or outside cabinet
- telephony subsystem (TSS) contains
  - — card cage that contains the control card, line maintenance card, power converter and ringing card
  - — backplane
  - — up to 64 line cards

Software defines and considers the Star Module a drawer in the Star Hub and not a stand-alone node. The Star Module mixes the functions of a line drawer and a line concentrating device (LCD). The Star Module is a line drawer at a remote site in a cabinet adapted for its location with appropriate connections to power and to subscriber lines. The Star Hub can connect to up to 16 Star Modules.

The Star Module

- supports up to 64 lines for all line types that the Star Hub supports as listed earlier in this chapter
- is a remote line drawer (RLD) in a Star Remote Module Equipment (SRME) wall mounted cabinet or a Star Remote Module Outside (SRMO) cabinet
- supports up to 28 ISDN lines
- connects to the Star Hub using one or two DS-1 links
- uses DMS-100 switch-based OAM&P

The following figure shows the configuration of the Star Remote System.

Figure 7-1 Star Remote System configuration

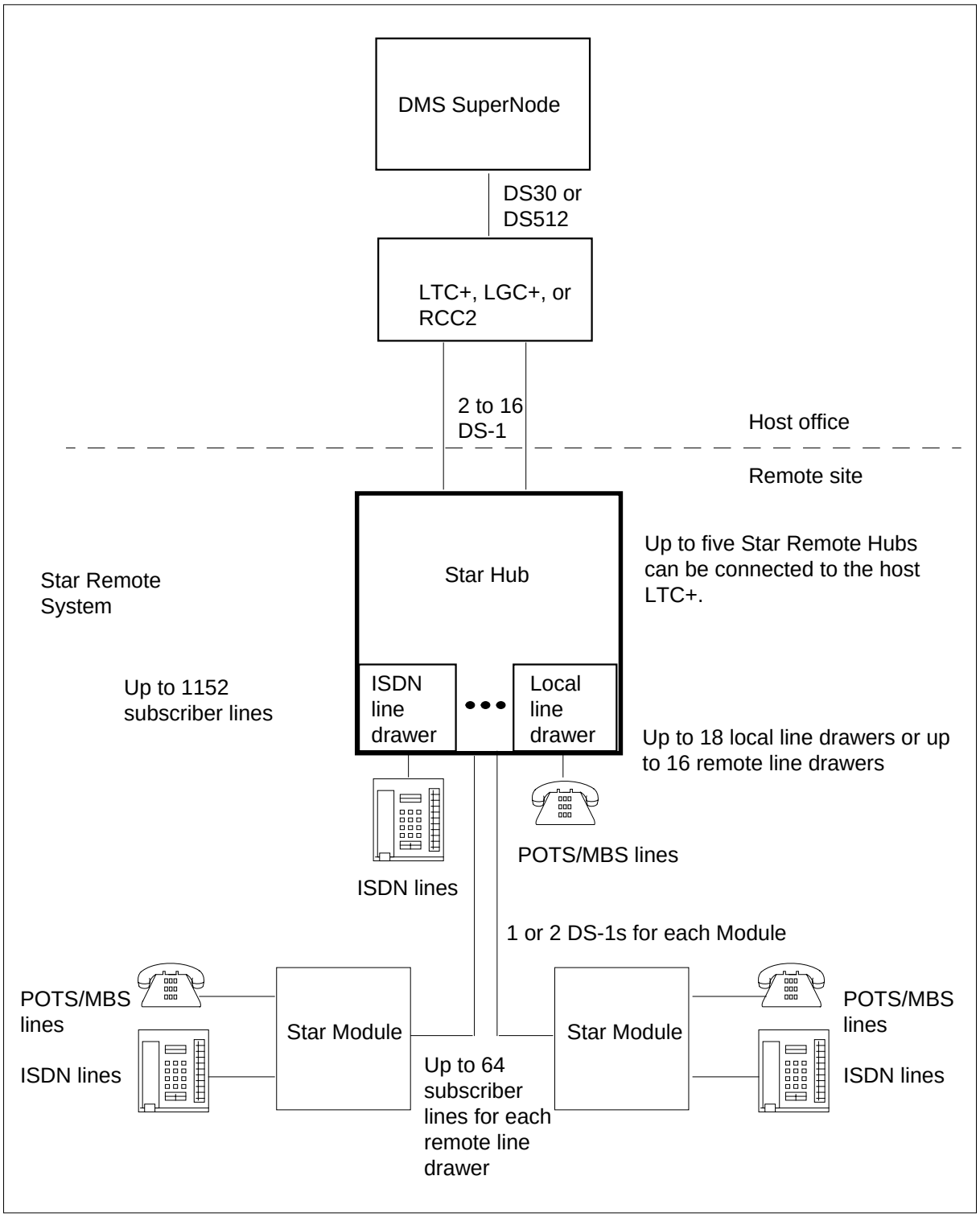

This section addresses the following aspects of Star Remote Hub functionality:

- voice and data communications
- integrated services digital network (ISDN) Basic Rate Interface (BRI) signaling (functional only, stimulus signaling is not supported)
- communications protocols
- signaling functions and capabilities

Voice and data communications

Voice and data calls are transferred between the host peripheral module (PM) and the Star Hub, and the Star Hub and Star Module over DS-1 links using extended superframe format (ESF) signaling. The host PM can be a

- line trunk controller (LTC) with the NTMX77AA unified processor (LTC+)
- line group controller (LGC) with the NTMX77AA unified processor (LGC+)
- remote cluster controller 2 (RCC2)

DS-1 frame format

Information transmits between the host XPM and Star Hub over DS-1 links. The Star Module and Star Hub communicate over DS-1 links. DS-1 links operate at a rate of 1.544 Mbyte/s with a sampling frequency of 8000 frames each second.

The DS-1 frame contains 24 8-bit bytes and a framing bit for a total of 193 bits for each frame. The 8-bit bytes fit into time slots or channels for a total of 24 channels in each frame. The framing bit goes before the 24 channels. These channels carry either speech information, signaling information, or operations information. The following figure shows the format of a DS-1 frame.

Figure 7-2 DS-1 frame format

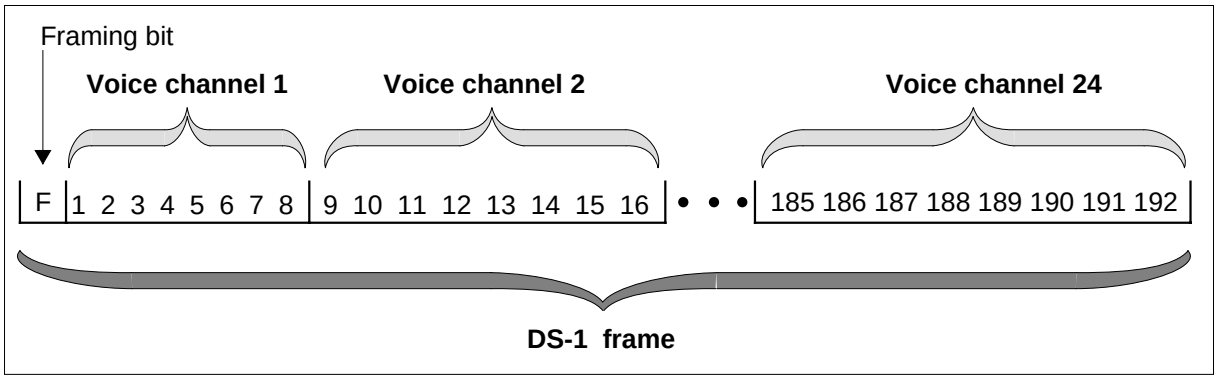

The framing bit identifies the location of the first time slot in the frame. When the Star Hub receives a framing bit, the Star Hub is told the eight bits that follow contain information from time slot one. The framing bit provides frame alignment within the superframe and extended superframe alignment configurations.

Superframe format signaling

A superframe contains twelve 24-channel frames. Superframe signaling uses framing bits for frame alignment and superframe alignment. The framing bit identifies the location of the first time slot in the frame. When the Star Hub receives a framing bit, the Star Hub is told that the eight bits that follow contain information from time slot one.

Superframe alignment identifies frames where time-slot-associated signaling bits are present. In superframe alignment, the framing bits, one for each 24-channel frame, form a 12-bit pattern. The following table shows this pattern.

Frame number	Framing bit type	Framing bit value
1	Ft	1
2	Fs	0
3	Ft	0
4	Fs	0
5	Ft	1
6	Fs	1
7	Ft	0
8	Fs	1
9	Ft	1
10	Fs	1
11	Ft	0
12	Fs	0

Framing bits from frames 1, 3, 5, 7, 9, and 11 are frame timing (Ft) bits; framing bits from frames 2, 4, 6, 8, 10, and 12 are frame signaling (Fs) bits.

When an Fs bit changes from 0 to 1 (that occurs in the change from frame 4 to frame 6), this change signals the Star Hub the sixth frame follows the 1 framing bit. When an Fs bit changes from 1 to 0 (that occurs in the change from frame 10 to frame 12), this change notifies the Star Hub the twelfth frame follows the 0 framing bit.

It is important to identify the sixth and twelfth frames in a superframe because these frames contain time-slot-associated signaling bits. These bits are found on all 24 time slots of the sixth and twelfth frames in the least significant bit position. A speech-signal bit was in this position first, but the speech-signal

bit was robbed. The speech-signal bit was replaced with a signaling bit that depends on the direction the data is moving.

Signaling bits located in the sixth frame are called A-bits, and signaling bits located in the twelfth frame are called B-bits.

The followng figure shows the format of a DS-1 superframe.

Figure 7-3 DS-1 superframe format

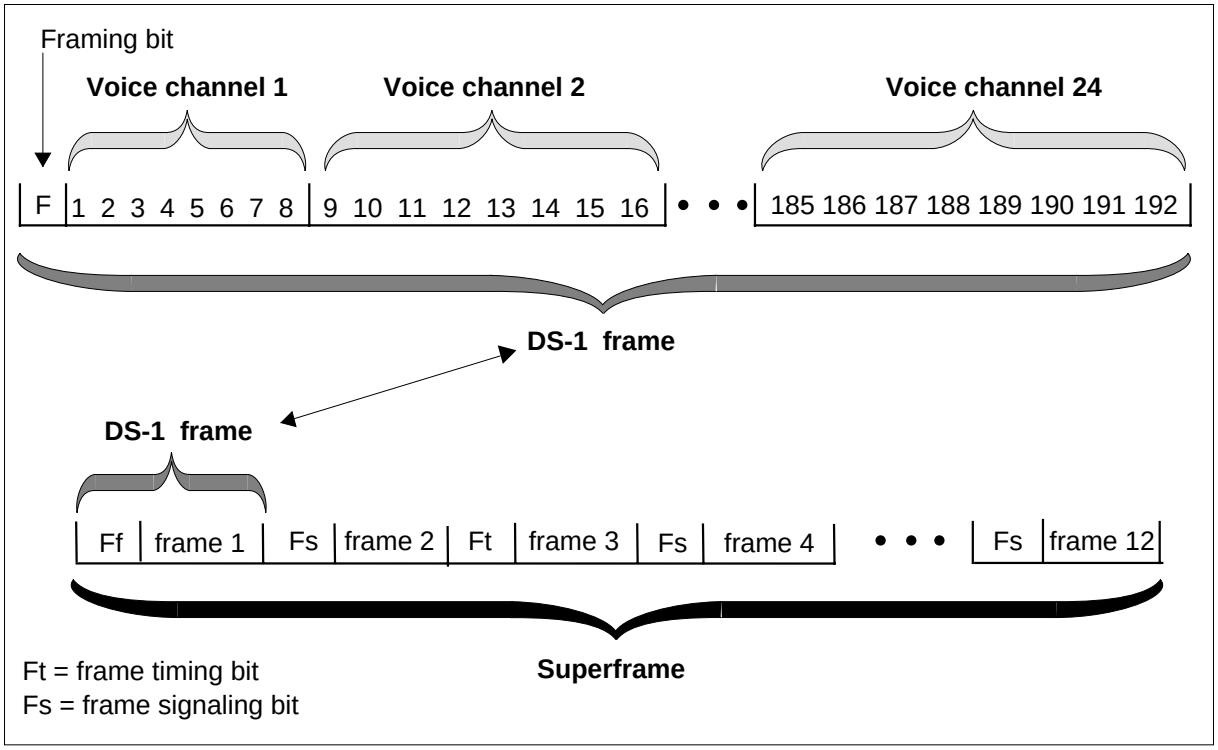

Extended superframe format signaling

Extended superframe format (ESF) signaling monitors DS-1 link performance and maintenance functions. ESF signaling improves robbed bit signaling messages by allowing messages to be represented by ABCD bits instead of AB bits, that the superframe format uses.

The ESF contains 24 DS-1 frames. In ESF, the framing bits, one for each 24-channel frame, form a 24-bit pattern. The 24-bit pattern communicates three types of information:

- frame pattern sequence (FPS)—The framing bit carries an FPS value of 001010. The FPS begins at the fourth frame and occurs every fourth frame using the framing bits. The FPS defines an in-frame condition.
- facility data link (FDL) performance (this capability is not used)—The FDL 4 is a Kb/s message. The FDL begins at the first frame and then

occurs every other frame thereafter using the framing bits. The Star Hub does not support facility protection and does not use FDL messaging bits.

- cyclic redundancy check—The CRC is not supported.

The following figure shows the format of a DS-1 ESF.

Figure 7-4 DS-1 ESF format

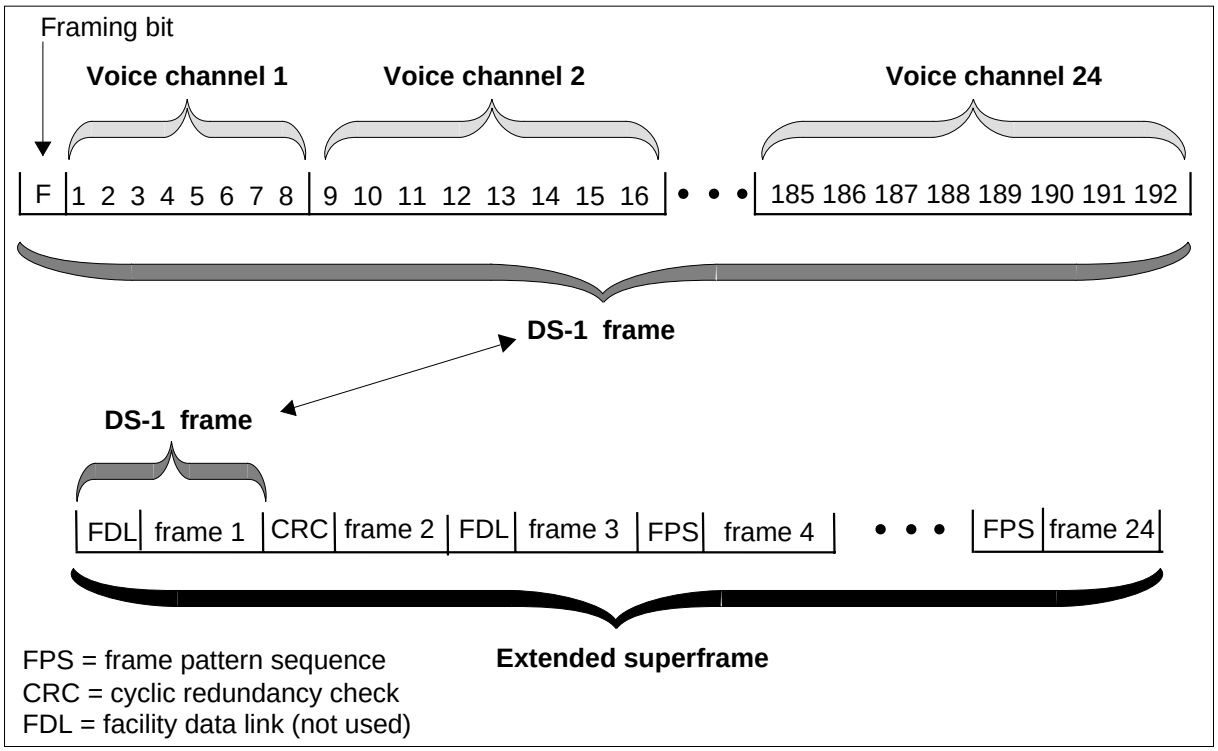

The following table details the extended superframe alignment pattern.

Figure 7-5 Extended superframe alignment pattern

Frame number	Framing bit type	Framing bit value
1	FDL	m
2	CRC	CB1
3	FDL	m
4	FPS	0
5	FDL	m
6	CRC	CB2
7	FDL	m
8	FPS	0
9	FDL	m
10	CRC	CB3
11	FDL	m
12	FPS	1
13	FDL	m
14	CRC	CB4
15	FDL	m
16	FPS	0
17	FDL	m
18	CRC	CB5
19	FDL	m
20	FPS	1
21	FDL	m
22	CRC	CB6
23	FDL	m
24	FPS	0

m = message bits
CB = check bits

ISDN BRI signaling

ISDN basic rate interface (ISDN BRI), commonly referred to as 2B+D, contains two 64-kbit B-channels for voice and data and a 16-kbit D-channel for signaling and packet data. There are two types of ISDN BRI signaling: functional and stimulus.

Software supports functional signaling built into the BRI terminal. The Q.931 protocol (operating in the host XPM), with the signaling control protocol sends call control messages between the terminal and the network. The Star Hub does not support stimulus signaling.

ISDN BRI contains two B-channels for voice and packet data and a D-channel for signaling. The system assigns the B-channels automatically for voice and data use. The D-channel is a permanently assigned network connection, established at provisioning time. Messages over the embedded operations channel (EOC) control the assignment of the D-channel.

Communication protocol

The host XPM and Star Hub communicate with the SuperNode switch over DS-1 links that terminate on the host XPM. The HDLC protocol communicates between the host XPM and the Star Hub.

HDLC-based Q.921 CCITT LAPD protocol

HDLC protocol is message protocol used to communicate between the

- host XPM and the Star Hub
- Star Hub and the Star Module

In the host XPM, the NTMX76AB messaging card uses the HDLC protocol. The following figure shows the HDLC message structure.

Figure 7-6 HDLC message format

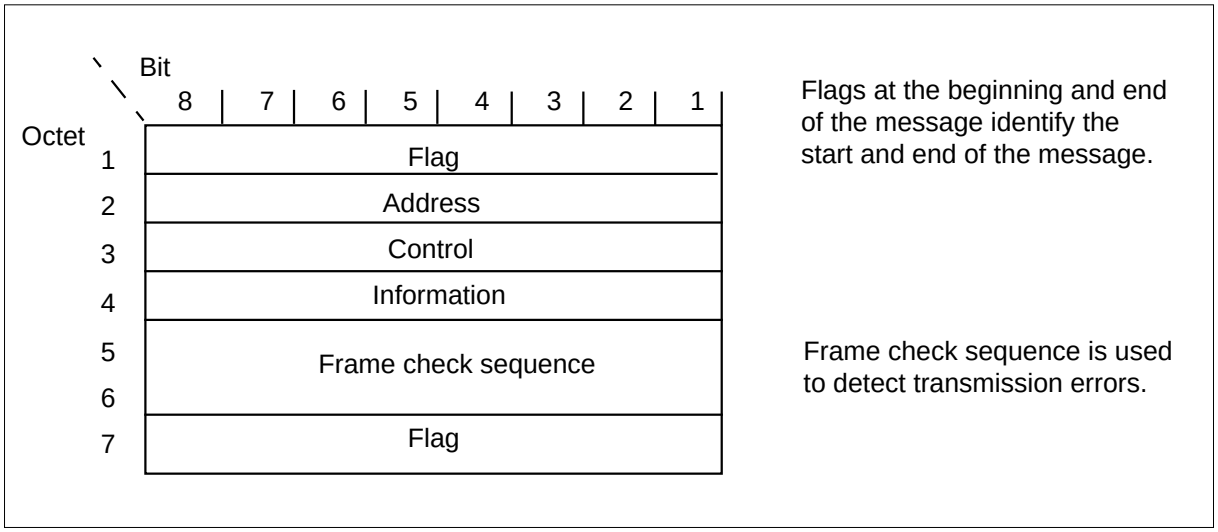

The Q.921 LAPD protocol

- establishes data link communications between the
  - — host XPM and the Star Hub
  - — Star Hub and the Star Module
- transmits information sent from a higher layer protocol
- receives information for delivery to a higher layer protocol

Signaling functions and capabilities

This section describes the signaling protocols used by the Star Hub to communicate with the DMS SuperNode switch and provide subscriber services. The following paragraphs discuss Star Hub signaling and the types of subscriber services they provide.

Star Hub signaling links

The NTMX81AA DS-1 interface cards in the Star Hub control shelf, are the signaling interfaces between the Star Hub and the host XPM.

Each DS-1 interface card accepts up to two DS-1 links from the host XPM. The Star Hub and the host XPM communicate over the DS-1 links through dedicated message channels. This signaling information allows the Star Hub and the host XPM to perform the following tasks

- communicate the states of subscriber lines
- execute call processing
- set up test configurations
- pass test results

The Star Hub is a remote that connects to the DMS SuperNode switch. The host office handles all intersystem (signaling between the host and other systems) and operator (host to subscriber) signaling.

Message channels

The Star Hub requires a minimum of two DS-1 links to the host. These links are primary links. The Star Hub requires two message channels to the host XPM. The message channels are in channel 1 on each of the primary DS-1 links to the host.

The Star Module uses one or two DS-1 links to connect to the host Star Hub. Each DS-1 link contains one message channel to communiate with the Star Hub.

If the Star Module uses one DS-1 link to connect to the Star Hub, that DS-1 link connecs according to the Star Module's number. Even numbered Star Modules connect to unit 0 of the Star Hub. Odd numbered Star Modules connect to the unit 1 of the Star Hub. If the Star Module uses two DS-1 links, C-side link 0 connects to unit 0 of the Star Hub and link 1 connects to unit 1 of the Star Hub. These two message links connects to the two line subgroups (LSG) in the Star Module, one for each LSG.

Star Remote System service capabilities

Star Hub signaling maintains call processing activities by allowing the functions of call origination, tone generation, digit collection, and ringing to occur. The following paragraphs describe each of these activities.

Call origination

Star Hub and Star Module signaling transmits the on- and off-hook signals that allow the host XPM to identify subscribers requesting service.

When a subscriber goes off hook, a voltage source in the Star Hub or Star Module provides a steady flow of current through the transmitter. The RCP processor detects this current and sends an off-hook message to the central office (CO). The CO

- uses the off-hook signal as a request for service
- allocates a channel on a DS-1 link to provide service the subscriber line
- applies dial tone to the line

Depending on the type of telephone, the subscriber line transmits open pulses or dual tone multifrequency (DTMF) signals through the Star Hub to the CO. The CO analyzes the digits and determines an interoffice call was placed. The calling end of the trunk will be seized and a connect signal, which is a sustained off-hook signal, is transmitted forward to the called end of the trunk. This signal indicates a request for service and continues while the connection is held.

Tone generation

The host XPM provides all correct ring cadence tones. The Star Hub applies these tones to subscriber lines when the Star Hub is in ESA mode. The tones supported by the host are as follows:

- dial tone
- audible ringing
- warble tone
- busy tone
- reorder tone
- receiver off-hook (ROH) tone
- notify tone

Digit collection

The Star Hub and Star Module perform the digit collection function of subscriber dialing. The Star Hub and Star Module use dial pulse, or DTMF dialing.

The address of a called party can be transmitted using dial pulsing or multifrequency signaling. Dial pulsing or multifrequency signaling are used for digit transmission only and must join with other types of signaling to provide the DS-1 links with complete signaling capability.

Dial pulse signaling The Star Hub performs dial pulse digit collection. With dial pulsing, the number of on-hook intervals in a train of pulses represent the number value of each digit.

The on-hook intervals of each digit are separated by short off-hook intervals. The digits are separated by relatively long off-hook intervals. The break time shown as a percent of the pulse period (break + make time) is called percent break.

The three important characteristics of dial pulsing are speed, percent break, and interdigital time. The host XPM analyzes these characteristics and assigns a channel or time slot in the digital line.

DTMF signaling Digitone telephones send dial pulse or DTMF signals to transmit address information over a line. During normal operation, the NTTR73AA universal maintenance pack (UMP) sends this signal to the host. During emergency stand-alone (ESA) operation, this information is sent to a Digitone receiver in the UMP.

DTMF signals are distinct combinations of tones which represent digits (0-9) and various other special units. The actual decoding of the tones to digits is handled by special trunk interface circuits, the DT and MF receivers.

The UMP in the Star Hub examines the output of these receivers to determine when a digit has been received. The UMP relays the digits from the MF receiver to the host XPM. The host XPM analyzes the digits and then applies a ringing signal to the called line.

End-to-end signaling

End-to-end signaling allows a subscriber to send DTMF signals to the far end using the keypad of a Meridian Digital Centrex (MDC) Meridian business set (MBS). When the customer presses appropriate keys at the MBS set, the subscriber outpulses DTMF signals to the machine that start, stop, rewind, and playback the recordings on tape at the machine. After each 130-millisecond DTMF signal, the pulse code modulation (PCM) signal connects again.

Ringing

The CO determines the type of ringing to apply. The CO sends a ringing signal to the Star Hub over the DS-1 channel associated with the subscriber line being called. This ringing signal tells the Star Hub to connect the ringing generator to that line. The CO provides the following ringing types and the Star Hub applies

- superimposed ringing (multiparty)
- coded ringing (cadencing)
- frequency selective ringing (FSR)

In the Star Module, the NTTR72AA Power converter and ringer card provide ringing. This card only supports coded ringing. The ringing frequency is

provisionable. Operating company personnel can set this value in field RINGER when entering the Star Module in table LCMDRINV.

ESA signaling

The ESA feature is an emergency service that provides a subset of call-processing capabilities when communications to the host are lost. This subset includes call processing for basic station-to-station calls within the Star Hub for plain old telephone service (POTS) and MDC lines. However, ESA does not support ISDN calls during ESA mode and any ISDN calls in the talking state in the Star Hub or Star Module are taken down when the Star Hub enters ESA.

The Star Hub in ESA provides the same tones as a correctly functioning Star Hub. The UMP card provides tone cadence , which interrupts the tone by controlling the RCP card. To provide a tone in ESA mode, the UMP sends a start cadence message to the RCP. This message defines the tone required, the terminal identification, and the cadence times.

When a make cadence message is received, the Star Hub performs the following steps:

1. Break terminal current receive path connection, if necessary.
2. Connect the receive path of the terminal to the correct port.
3. Set up the indicated cadence for that tone.

The handling of idle tone also uses the start cadence message. The Star Hub connects the receive path to a port that provides idle tone.

MBS signaling

Meridian Business Set (MBS) signaling enables call processing software to communicate directly with the MBS terminal. An above-voice frequency, low-speed data channel transports the actual MBS messages over the loop. This data channel sends signaling information over a separate D-channel between the Star Hub and the host XPM. MBS feature services are described in *DMS-100 Business Set Feature Description and Operation*.

The data channel is an 8-kHz signal with data communicated by the presence or absence of this signal. The following MBS features are supported for the Star Hub:

- Automatic Answer Back
- Automatic Dial
- Automatic Line
- Executive Busy Override
- Call Back Queueing

- Call Forward All Calls
- Call Park
- Call Pickup
- Call Waiting
- End-to-End signaling
- Group Intercom
- Individual Business Line
- Intercom
- Listen on Hold
- Make Set Busy
- Malicious Call Hold
- Multiple Appearance DN
- On-Hook Dialing
- Privacy Release
- Ring Again
- Speed Calling
- 3-Way Call/Call Transfer
- 6-Port Conference
- Feature Display
- Display Called Number
- Display Calling Number
- Query Time
- Business Set Inspect Key
- Automatic Inspect Mode
- Business Set Call Forward Universal Per Key
- Call-Request Enhancement
- Direct Station/Busy Lamp Field for MBS
- Station Camp-On for MBS
- Group Intercom All Call
- MADN Cut-Off on Disconnect (COD)
- MADN Bridging - Three-Way Call
- Multiple Executive Message Waiting Keys per DN

Custom local area signaling service

The Star Hub supports custom local area signaling service (CLASS) features when a CLASS modem resource (CMR) card is installed in the host XPM. Calling number delivery is a CLASS feature that gives single-party subscribers and Meridian Digital Centrex (MDC) customers the ability to receive the incoming calling party number, time, and date of call on the customer premises equipment (CPE).

1-Meg Modem Service supported protocols

The 1-Meg Modem Service uses several protocols to carry data from the subscriber to the service provider. The following figure illustrates the 1-Meg Modem Service architecture.

Figure 7-7 1-Meg Modem Service architecture

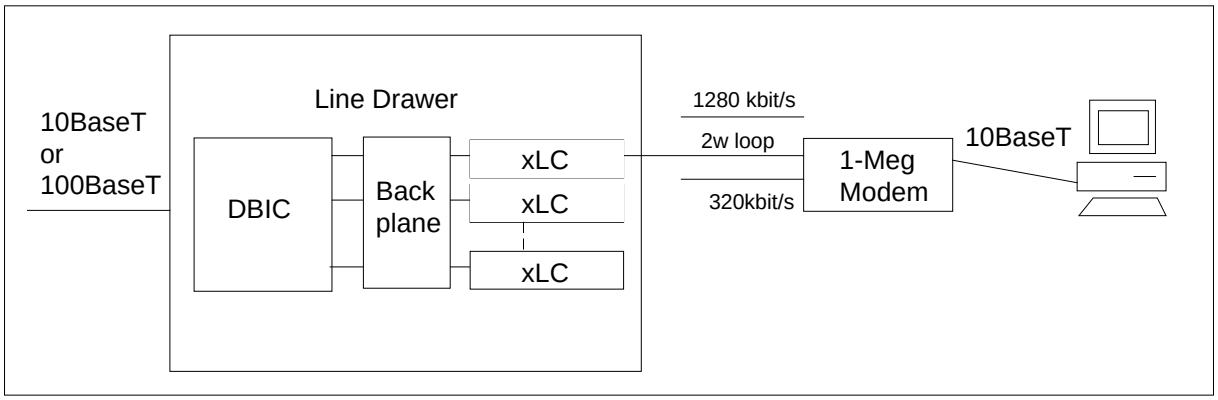

DBIC

The following section describes the protocols used by the data-enhanced bus interface card (DBIC), x digital subscriber line (xDSL) line card (xLC), subscriber loop, and 1-Meg Modem.

Ethernet The DBIC has a half-duplex Ethernet interface on the network side. The DBIC stores downstream frames and transmits the frames to the user. The DBIC only sends frames with media access control (MAC) addresses that match the MAC addresses of the active users. Similarly, the DBIC stores frames from the user side. The DBIC sends these frames to the network when it receives the whole frame.

The DBIC sends all user traffic out at the Ethernet port. The DBIC does not route traffic between users. This method has the following advantages.

- makes sure that all traffic goes to the correct service provider
- reduces the bandwidth overhead for broadcasts
- improves network security

The 1-Meg Modem Service does not process data above Layer 2. The 1-Meg Modem Service remains at the MAC layer and only uses the Ethernet address. Since the DBIC does not look at the payload carried in the Ethernet frames, except for ARP and BOOTP messages, the DBIC can carry Layer 3 data, such as internet protocol (IP), Internet Packet Exchange (IPX), and Appletalk. However, 1-Meg Modem Service only supports TCP/IP. The 1-Meg Modem Service can support other protocols, such as IPX, if MAC translation is turned off. When you turn MAC translation off, you reduce security and increase the configuration work for the transport network. However, this setup can be acceptable in a campus environment. The maximum transfer unit (MTU) size for the 1-Meg Modem Service is 1500 bytes, the same size that is defined in the ANSI 802.3 standard.

XLBUS The DBIC uses a point-to-point connection to each line card to exchange voice and data with the xLCs. The extended LBUS (XLBUS) is bidirectional with a total capacity of approximately 1.5 Mbit/s for data traffic. Upstream data, downstream data, and control data share this capacity. The XLBUS carries user data, synchronization and xLC control and status information. The control data carried over the XLBUS allows the DBIC processor to access registers in the xLC. User frames passed by the XLBUS have special Start Of Frame (SOF) and End Of Frame (EOF) control bytes.

xLC and loop

The xLC and subscriber loop use the following protocols.

XDLC The user data in the xLC is encapsulated into the XDLC protocol, which is based on HDLC.

XLINK The XLINK frame has a fixed length for robust framing.

XLOOP The XLOOP includes the details that relate to the modulation used to carry data over the copper loop. In the downstream direction, 256/64/16/4-quadrature amplitude modulation (QAM) can be used over narrowband or wideband spectrums providing 1280, 960, 640, 320, 240, 160 or 80 kbit/s of raw data throughput. In the upstream direction, 256/64/16/4-QAM are also used providing 320, 240, 160, 120, 80 or 40 kbit/s of raw data throughput.

1-Meg Modem

The Ethernet interface at the 1-Meg Modem provides a half-duplex 10BaseT or 100BaseT connection. The interface does not filter local traffic and passes all traffic upstream. Only one Ethernet device can connect to the 1-Meg Modem.

Preparing to datafill Star Remote System

Nortel (Northern Telecom) delivers Product Computing-Module Loads (PCLs). A PCL consists of features from the development stream software product intended for a given application in a given market. An 8-digit PCL ordering code and functional group name identify the software required for the Star Remote System.

Functional group for Star Remote System

The following paragraph provides the functional group name, ordering code, and prerequisites for the Star Remote System

Remotes Generic, BAS00012

To operate, the Star Remote System requires functional group BAS00012, BAS Remotes Generic.

BAS00012 includes the following package names

- Basic Call Processing
- RLCM-ESA Operation
- Intra-RLCM Calling

Tasks associated with datafilling the Star Remote System

The Star Remote System tables fall into several groups. These groups contain the tasks that associate the entry of data in the Star Remote System. The groups of tables that must be entered appear in the following summary.

- test trunks, test lines, and service circuits in table CLLI
- the Star Remote System components and location datafill in tables SITE, LTCINV, LTCPSINV, LCMINV, DFINV, LCMDRINV, LNINV, and RMPCKT
- call processing translations in the lines, trunks, screening, and routing tables TRKGRP, TRKSGRP, TRKMEM, LINEATTR, NUMDIGS, ISGDEF, LTMAP, LTGRP, LTDEF, IBNLINES, IBNFEAT, KSETINV, KSETLINE, KSETFEAT, LENLINES, LENFEAT, and DNROUTE
- system alarms in tables ALMSCGRP, ALMSDGRP, ALMSD, and ALMSC
- ESA in tables LCMNV, ESAPXLA, and CUSTHEAD
- metallic test access assignments in tables MTAMDRVE, MTAVERT, and MTAHORIZ

Procedures for datafilling the Star Remote System

The entry procedures that this manual describes list the field and subfield names of the key tables. These key tables must be entered for the Star Remote System. Explanations of each field and subfield are provided. This guide

includes information for the Star Remote System datafill. Examples of field entries are available for most fields and subfields.

Descriptions of the key tables for the Star Remote System appear in the following chapters of this manual. The data design section of the *Translations Guide* contains descriptions of other tables. These tables contain datafill for call processing, scan and signal distribution points, and system alarms.

Functional group for 1-Meg Modem on Star Hub

The following paragraph provides the functional group name and ordering code for the 1-Meg Modem service on Star Hub.

To enable the 1-Meg Modem capability, the Star Remote System requires functional group HSTP0002 (HSTP DMS ADSL Capability).

Tasks associated with datafilling the 1-Meg Modem service on Star Hub

The tables that must be entered to support 1-Meg Modem service on Star Hub include tables LCMINV, LCMDRINV, and LNINV.

Procedures for datafilling 1-Meg Modem service on Star Hub

The entry procedures that this manual describes list the field and subfield names of the key tables. These key tables must be entered to activate 1-Meg Modem service on the Star Hub.

Basic call processing

Functional group

Functional group: BAS00012

Release applicability

NA0011/XPM11 and up

Prerequisites

To operate, Basic call processing has the following prerequisite:

Functional group: BAS00003

Description

The BAS00012 functional group allows the Star Remote System to provide basic call processing capability for up to 1152 subscriber lines. Some of the features it provides include the following

- line testing capability
- alarms processing
- coin capability
- operational measurements (OM)
- basic maintenance features

In addition, the Star Remote System supports the following service capabilities

- Meridian Digital Centrex (MDC) to provide central telephone exchange services for businesses
- integrated services digital network (ISDN) when up to six ISDN line drawers for remotes (ILD-R) are installed in place of standard plain ordinary telephone service (POTS) line drawers. A maximum of two ILD-Rs can be installed in each line drawer shelf.

The Star Remote System includes the Star Hub and the Star Module. When datafilling the Star Remote System, the following must be understood:

- The Star Hub is a type of line concentrating module (LCM) that is datafilled in table LCMINV
- The Star Module is also known as a remote line drawer and RLD that is datafilled in table LCMDRINV

Basic call processing (continued)

Operation

The Star Hub connects to a line trunk controller with an NTMX77AA unified processor (LTC+), a line group controller with an NTMX77AA processor (LGC+), or a remote cluster controller (RCC2). The Star Hub connects to the LTC+, LGC+, or RCC2 by a minimum of two or up to a maximum of 16 DS-1 links. The Star Hub functions as an interface between the DS-1 links from the host network and up to 1152 subscriber lines. To support high-level data link control (HDLC) protocol, the LTC+, LGC+, or RCC2 must have an NTMX76AB messaging card.

The Star Remote System supports extended distance. Extended distance allows the Star Remote System to operate with a round trip delay of up to 13 ms from the host office.

User interface

Basic call processing does not affect user interface. In NA011, the following MAP levels are introduced to support the Star Module remote line drawer (RLD):

- RLD level is where maintenance is performed on the Star Module
- RLDPES (RLD power and environmental system) level is where the power and environmental system alarms are displayed
- RLDCarr (RLD carrier) level is where all the carrier maintenance activities and status of carriers between Star Hubs and the host Star Module

Translations table flow

The Basic call processing translation process is shown in the following flowchart.

Basic call processing (continued)

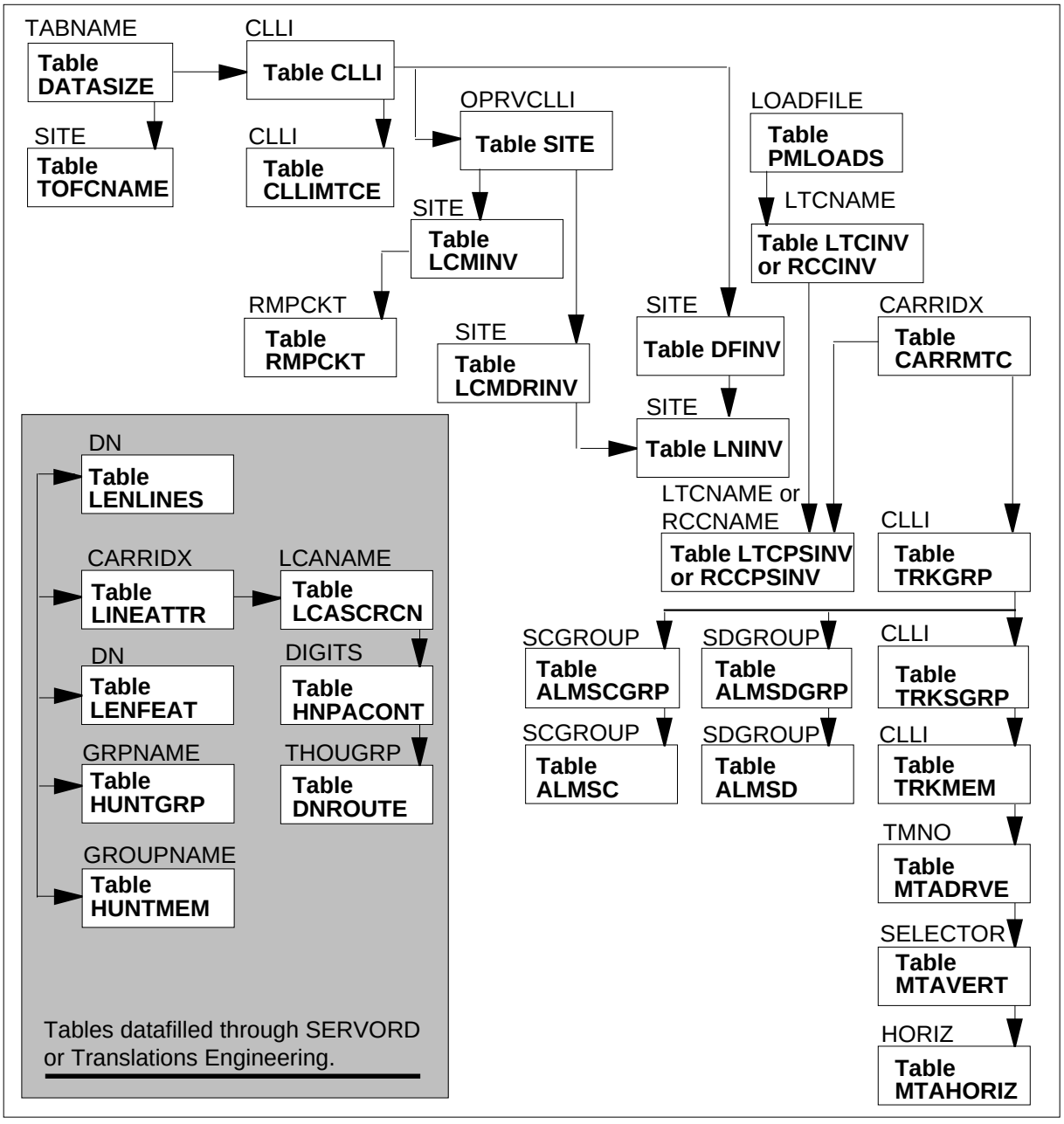

Limitations and restrictions

This sections lists the limitations and restrictions that apply to Basic call processing for the Star Hub and Star Module.

Star Hub

The following restrictions and limitations apply to the Star Hub.

- up to 18 drawers can be defined in the Star Hub or up to 16 Star Modules, also known as remote line drawers (RLD)
- each local drawer can be either a standard DMS-100 line drawer or an ILD-R. Up to six ILD-Rs can be provisioned in a Star Hub, with a maximum of two ILD-Rs in each line drawer shelf.
- The Star Hub connects only to
  - — an LTC+ with an NTMX77AA or NTSX05AA processor
  - — an LGC+ with an NTMX77AA processor
  - — an RCC2 with an NTAX74AA processor
- up to five Star Hubs can connect to the host LTC+, LGC+, or RCC2. Up to 100 Star Hubs can connect to a SuperNode switch.
- The Star Hub connects only to non-Extended Distance Capability (EDC) equipped LTC+, LGC+, or RCC2. This is because of the differences between the EDC protocol (Q.703) and the connection to the Star Hub (LAP-D). This limit is because the NTMX76 cannot support both protocols at the same time.
- In the LTC+, LGC+ or RCC2, because of a software message channels limitation of 30 channels, a maximum of 15 nodes can be provisioned off the LTC. The overall number of Star Hubs and ILD-Rs (and other nodes, such as a Remote Switching Center-SONET [RSC-S] or line concentrating module [LCM]) off this LTC+ cannot exceed 15.
- The host LTC+ must be equipped with NT6X50AB on its P-side to support ISDN 64Kbps clear channels signaling to the Star Hub.
- To support Analog Display Services Interface (ADSI) tones, the LTC+ must be equipped with an NTMX76AB with new firmware load.
- The Multi-Point Embedded Operation Channel (MP-EOC) feature is not supported for the ILD-R or Star Module.
- The ILD-R is ISDN national ISDN 1 (NI-1) compliant. NI-2 support will be added in the future. The host LTC+ is limited to 480 ISDN loops.
- the following restrictions apply to line cards in the Star Hub:
  - — when an NT6X19AA message waiting line card is used, an NT6X20AA message waiting converter card is required
  - — when an NT6X19AA message waiting line card is used, then only the metering line card without +48 V can be used

Basic call processing (continued)

- — when an ISDN converter with -100 V is used, then the following cards cannot be installed: NT6X18AB metering line card with +48 V, NT6X19AA message waiting line card, and NT6X18BA Class B metering line card
- — when an NT6X21AC P-phone line card is required, it must be installed at least four slots away from the NT6X99AA IBERT line card

- The following automatic line (AUL) features are supported while the Star Hub is in ESA mode:
  - — AUL with a maximum of 15-digit directory number for POTS and IBN lines
  - — AUL must be datafilled by SERVORD (the IBN EBS automatic line feature key is not functional)
  - — manual lines are treated as automatic lines with the operator's numberfor the automatic line DN
- The following Hunt Group features are supported in ESA mode.
  - — multiline (MLH)
  - — distributed line (DNH)
  - — directory number (DNH)
  - — MLH, DLH, and DNH groups with sequential line hunting
  - — DLH group is considered the same as the MLH group
  - — no circular hunting for DNH
  - — maximum of 26 hunt groups foe each Star Hub
  - — maximum of 520 hunt group members in all hunt groups
  - — maximum of 520 members for each hunt group
  - — remote make busy (RMB) is not supported
  - — stop hunt is not supported

Star Module

The following limitations and restrictions apply to the Star Module.

- The Star Module connects only to the Star Hub.
- up to 16 drawers (Star Modules) can be located at a distance from a Star Hub

Basic call processing (continued)

- Each Star Module supports
  - — up to 64 POTS, Coin, or P-phone lines
  - — up to 28 ISDN loops, up to 14 ISDN for each LSG
  - — a combination of POTS and ISDN loops not exceeding 64 total lines and 28 ISDN loops in a 1 to 1 ratio (that is, it can support 28 ISDN lines plus 36 POTS lines)
- Each Star Module connects to the Hub by up to two DS-1 links. C-side link 0 of the Module connects to unit 0 of the Star Hub and C-side link 1 of the Module connects to unit 1 of the Star Hub. If the Star Module has one DS-1 link, the link connects according to the Module's number. If the Module is an even number, the link connects to unit 0 of the Hub. Odd numbered Modules connect to unit 1 of the Hub.
- For Star Module, one Bd channel is provisioned. The Star Module provides for a mixed combination of ISDN and non-ISDN lines.
- If a DS-1 link between the Star Module and its host Star Hub fails, all the calls and special connections on this DS-1 are released. Takeover of stable calls are not supported for DS-1 link failure.
- If a Star Hub goes into takeover mode and
  - — if there is only 1 DS-1 link between the Star Module and its host Star Hub, then all the stable calls and special connections on this DS-1 will remain stable.
  - — if there are 2 DS-1 links between the Star Module and its host Star Hub, then call takeover will occur. Takeover causes the stable calls to be routed to the second DS-1 depending on the number of free channels on that DS-1.
- Intraswitching and ESA are not supported for the Star Module.
- Up to 1000 Star Modules can be defined for each switch. Up to 90 Star Modules and ILD-Rs can be defined for each host peripheral module (PM).
- The Star Module does not support superimposed and frequency selective ringing.
- The Star Module does not support the Multi-Point Embedded Operation Channel (MP-EOC) feature.
- ISDN limits for the Star Module are similar to these defined for the ILD-R, except that the Star Module is not NI-2 compliant. NI-2 compliance is planned for a future release. The Star Module is ISDN NI-1 compliant.

Basic call processing (continued)

- The Automatic line (AUL) and Hunt group features for the Star Module are supported while the Star Hub is in ESA mode. The same restrictions that applied to the Star Hub in ESA mode also apply to the Star Module.
- The following restrictions apply to line cards in the Star Module:
  - — When a Message Waiting line card (NT6X19AA) is used, then the Message Waiting Converter card (NT6X20AA) is needed.
  - — When a Message Waiting line card (NT6X19AA) is used, then only the Metering line card without +48V can be used.
  - — P-phone line card (NT6X21AC) must not be placed within four slots adjacent to the IBERT card (NT6X99AA).

Activation/deactivation by the end user

Basic call processing requires no activation or deactivation by the end user.

Interactions

Basic call processing has no functionality interactions.

Billing

Basic call processing does not affect billing.

Station Message Detail Recording

Basic call processing does not affect Station Message Detail Recording.

Datafilling office parameters

The following table shows the office parameters used by Basic call processing. For more information about office parameters, refer to *Office Parameters Reference Manual.*

Office parameters used by Basic call processing (Sheet 1 of 2)

Table name	Parameter name	Explanation and action	Range
OFCENG	RLCM_ESAENTRY_BADCSIDE	This parameter defines the time period the Star Hub enters ESA after losing communication with the host.	1 to 60 minutes
OFCENG	RLCM_ESAENTRY_BADLINK	This parameter defines the time period the Star Hub enters ESA after the C-side links have failed.	0 to 100 (in 10 s increments)

Basic call processing (continued)

Office parameters used by Basic call processing (Sheet 2 of 2)

Table name	Parameter name	Explanation and action	Range
OFCENG	RLCM_ESASDUPD_BOOL	This parameter identifies if ESA static data should be loaded automatically to the Star Hub each night.	Y or N
OFCENG	RLCM_ESASDUPD_HOUR	This parameter determines the time when the ESA static data is downloaded to the Star Hub.	0 to 23
OFCENG	RLCM_ESA_NOTIFY_TONE	This parameter identifies if a stuttered dial tone is provided when the Star Hub is in ESA.	Y or N
OFCENG	RLCM_XPMESAEXIT	This parameter defines the amount of time the Star Hub will count down, after communication has been lost with the host. If no communication problems are noted, it will exit ESA.	0 to 100 (in 10 s increments)

Datafill sequence

For BAS00012 functional group to operate properly, the following tables must be datafilled in the order they are listed. After datafill, both the host PM and the Star Hub must be reloaded from the central control (CC) to activate functional group BAS00012.

The following table lists the tables that require datafill to implement the Basic call processing. The tables are listed in the order in which datafill is entered.

Datafill tables required for Basic call processing (Sheet 1 of 4)

Table	Purpose of table
DATASIZE	Ensures adequate system memory to accommodate additional entries in trunk group tables.
CLLI	Identifies the maintenance and test trunks used in the Star Hub.
SITE	Allows the DMS switch to recognize the remote equipment tied to the host.
Note: Data is entered in this table through SERVORD. No datafill procedure or example is available. Refer to *SERVORD Reference Manual* for an example that uses SERVORD to enter data in this table.	

Basic call processing (continued)

Datafill tables required for Basic call processing (Sheet 2 of 4)

Table	Purpose of table
PMNODES	Peripheral module node table. Table peripheral module nodes is read only, used by the CM to control XPM unit node tables. Table PMNODES is automatically datafilled when entries are added or changed in inventory tables. An entry will exist in table PMNODES for all subtending nodes of each XPM. Fields will be updated to reflect CM control of configuration data tables (CDT) in the XPM nodes.
LTCINV	Inventories various peripheral module (PM) types, excluding P-side link assignments.
LTCPSINV	Identifies the module type, number, and the port designation of the P-side links
CARRMTC	Sets the maintenance and engineering parameters and characteristics for DS-1, T1 carrier spans.
LCMINV	Lists data assignment for each frame associated with a Star Hub.
LCMDRINV	Lists data assignments for each drawer or Star Module associated with a Star Hub.
RMPCKT	Lists information for various maintenance cards.
ISGDEF	ISDN service group definition. Identifies the ISDN service group (ISG) numbers, PM type, the services provided, and the allocation of services to channels.
LTGRP	Logical terminal group. This table associates a logical terminal group name with the terminal types that can be entered in that group. This table is required for ISDN service.
LTDEF (Note)	Logical terminal definition. This table defines logical terminals and the access privilege of these terminals. This table is required for ISDN service.
REXSCHED	System REX scheduling of frequency and number of concurrent SREX tests. Used along with parameter NODEREXCONTROL in table OFCVAR to control the execution of all SREX testing. Tuples are automatically added to this table after inventory tables are datafilled.
LCASCRCN	Assigns local calling area names to serving trunk group area codes.
TRKGRP	Identifies the test circuits associated with the maintenance and test trunks.
TRKSGRP	Lists the supplementary information for each subgroup that is assigned to one of the trunk groups listed in table TRKGRP.
TRKMEM	Identifies the circuits associated with the test equipment used to test lines and trunks.

Note: Data is entered in this table through SERVORD. No datafill procedure or example is available. Refer to *SERVORD Reference Manual* for an example that uses SERVORD to enter data in this table.

Basic call processing (continued)

Datafill tables required for Basic call processing (Sheet 3 of 4)

Table	Purpose of table
CLLIMTCE	Lists the testing parameters for each trunk group CLLI.
ALMSCGRP	Lists alarm scan circuits, their locations, and card types, and serves as a head table for the respective scan points.
ALMSC	Identifies the functions to be performed by each of the assigned scan points in the alarm scan groups.
ALMSDGRP	Lists alarm signal distributor (SD) circuits, their locations and card types, and serves as a head table for the respective SD points.
ALMSD	Identifies the function to be performed by each of the assigned SD points in the alarm SD groups.
DFINV	Identifies the location of distribution frames at the host or remote sites.
TOFCNAME	Lists all terminating offices in the switch.
LINEATTR	Assigns line attributes to regular lines in table LENLINES, Meridian stations, and attendant consoles in the MDC translations tables.
NUMDIGS	Stores information needed for ESA support in the Star Hub. This table is an extension of table LINEATTR since both tables use the same index.
LNINV	Retains an inventory of subscriber lines and associated line cards for the Star Remote System.
HUNTGRP	Stores the data for the hunt groups assigned in the switching unit.
LENLINES	Lists the following data for each line: • site name, if the line is remote • line equipment number • specifies the party where the directory number is assigned • specifies the ringing code assigned to the directory lines • directory number • signal type • index into table LINEATTR • list of options
LENFEAT	Lists the features assigned to a specific line in table LENLINES.
Note: Data is entered in this table through SERVORD. No datafill procedure or example is available. Refer to *SERVORD Reference Manual* for an example that uses SERVORD to enter data in this table.	

Basic call processing (continued)

Datafill tables required for Basic call processing (Sheet 4 of 4)

Table	Purpose of table
HUNTMEM	Lists the members assigned to the hunt groups listed in table HUNTGRP.
IBNLINES (Note)	The IBN line assignment. This table defines the line assignments for each MDC station number.
IBNFEAT (Note)	The IBN line features. This table defines the line features assigned to the MDC lines that appear in table IBNLINES.
KSETINV (Note)	Business set and data-unit inventory. This table stores inventory data for each line card slot assigned to Meridian business sets, ISDN sets and data units.
KSETLINE (Note)	Business set and data-unit line assignment. This table defines the data for directory number appearances on Meridian business sets, ISDN sets and data units.
KSETFEAT (Note)	Business set and data-unit feature. This table defines the line features assigned to the business sets and data units. These line features appear in table KSETLINE.
LTMAP	Logical terminal map. This table associates logical terminals with a service access. The access privilege assigned determines the service access. This table is required for ISDN service.
DNROUTE	Lists information for writeable directory numbers in the switch.
HNPACONT	Lists the home numbering plan area (HNPA) subtables.
MTAMDRVE	Specifies the physical location and the type of the minibar driver assigned to the minibar switch.
MTAVERT	Identifies the vertical connectivity to the MTA matrix.
MTAHORIZ	Lists the assignment to a horizontal and horizontal group of MTAMs.

Note: Data is entered in this table through SERVORD. No datafill procedure or example is available. Refer to *SERVORD Reference Manual* for an example that uses SERVORD to enter data in this table.

Datafill examples

Each possible table for datafill required for activation of functional group BAS00012 is briefly described in the sections that follow. Sample tuples are provided as illustrations only. Refer to *Translation Guide* for more information on tables.

Datafill for all tables may not be required, depending on actual office configuration and provisioning. The actual tuples for each table also depend

on office configuration. Datafill needs are established at the installation of the Star Remote System.

The continuation mark (+) occurs in data tables when additional data for a subfield is indicated on the next record. A dollar sign ($) is entered to end the vector.

Datafilling table DATASIZE

Table DATASIZE makes sure there is enough system memory to allow additional entries in tables CLLI, TRKGRP, and TRKSGRP, allowing the addition of maintenance facilities for the Star Remote System. The table is initially entered with default values for field sizes. To change a default value, use the REPLACE command.

Note: After the initial input of the size value for a given table, the SIZE field can only be changed by Nortel.

Datafill example for table DATASIZE

The following example shows sample datafill for table DATASIZE.

MAP display example for table DATASIZE

```
DATSKEY     SIZE
_____________________________________________________________
 CLLI          650
   :             :

  TRKGRP        500
  TRKSGRP       500
```

Datafilling table CLLI

Table CLLI, common language location identifier, uniquely identifies the hardware source of each tone, announcement, trunk group, test trunk, and service circuit in the DMS-100 switch.

Since the Star Hub is provisioned with an NTTR73AA universal maintenance pack (UMP), additional entries may be required for line test circuits, such as remote operator verification, REMOTEVER90, and remote test desk, REMOTETESTDK.

Some CLLI entries are created automatically when corresponding features are present in the DMS SuperNode switch and may already be present in table CLLI.

Basic call processing (continued)

If additional entries are not required for line test circuits, the trunk group sizes for these entries assigned in field TRKGRSIZ must be checked to make sure the UMP can be accommodated.

CLLI entries whose trunk group size may need to be checked are as follows:

- LTU line test unit
- MONTALK monitor/talk connection
- OAUSC office alarm unit scan points
- OAUSD office alarm unit SD points
- MTADRIVER metallic test access driver
- test desk connection

The total number of entries where memory is allocated in table CLLI is equal to the value of field SIZE in table DATASIZE for key CLLI.

The following table shows the datafill specific to Basic call processing for table CLLI. Only those fields that apply directly to Basic call processing are shown.

For a description of the other fields, refer to the data schema section of the *Translations Guide*.

Datafilling table CLLI (Sheet 1 of 2)

Field	Subfield or refinement	Entry	Explanation and action
CLLI		see subfields (up to 16 characters)	Common language location identifier. This 16-character field uniquely identifies the far end of each announcement, tone, trunk group, test trunk, national milliwatt test lines, and service circuit. The recommended method for naming CLLI is PLACE, PROV, BLDG, TRAFUNIT, and SUFX.
	PLACE	alphanumeric	Place. This four-character code identifies the name of the city or town at the far end of each group.
	PROV	alphanumeric	Province or state. This two-character code identifies the province or state at the far end of the trunk group.
Note: Memory is allocated by the SIZE field in the data size (DATASIZE) table for the entry with field DATSKEY equal to CLLI. The maximum number of CLLI codes is 8192.			

Datafilling table CLLI (Sheet 2 of 2)

Field	Subfield or refinement	Entry	Explanation and action
	BLDG	alphanumeric	Building. This two-character code identifies the building number at the far end of the trunk group.
	TRAFUNIT	alphanumeric	Traffic unit. This three-character code identifies the destination of the traffic unit at the far end of the trunk group.
	SUFX	alphanumeric	Suffix. This one-character code identifies trunk groups that terminate at the same CLLI location.
ADNUM		numeric	Administrative trunk group number. Enter a number from 0 to a number one less than the size of table CLLI shown in table DATASIZE. The value must be unique.
TRKGRSIZ		0 to 2047	Trunk group size. This four-character field is equal to the maximum quantity of trunk members that are expected to be assigned to the trunk group.
ADMININF		alphanumeric (up to 32 characters)	Administrative information. This 32-character field is used by the operating company to record administrative information. The information in this field is not used by the switching unit. The recommended subfields are TRAFCLS, OFFCLS, and TRKGRTYP.
	TRAFCLS	alphanumeric	Trunk group traffic class. This field is optional input for administrative purposes only.
	OFFCLS	alphanumeric	Office class. This field is optional input for administrative purposes only.
	TRKGRTYP	alphanumeric	Trunk group type. This field is optional input for administrative purposes only.
Note: Memory is allocated by the SIZE field in the data size (DATASIZE) table for the entry with field DATSKEY equal to CLLI. The maximum number of CLLI codes is 8192.			

Datafill example for table CLLI

The following example shows sample datafill for table CLLI.

Basic call processing (continued)

MAP display example for table CLLI

```
     CLLI ADNUM  TRKGRSIZ                          ADMININF
_____________________________________________________________
SYNCH         8         10                  SYNCH/NONSYNCH
OFFHKSUP      9         10      SUPERVISION_SIGNAL_OFFHOOK
RSMVER90     23       10  REMOTE_SERVICE_MOD_VERIFICATION
OPMPES       78        198        OUTSIDE_PLANT_MODULE_PES
ALMSC        79        240                       ALARM_SC
ALMSD        80        240                       ALARM_SD
RLCMVER90    81         10             RLCM_REMOTE_VER_CKR
UMP          83         10                     STAR_UMP_CARD
TDSK        716         10                         TEST_CARD
LMU          83         10                         TEST_CARD
```

Datafilling table SITE

Table SITE lists all node sites that depend on the DMS-100 switch and miscellaneous configuration information for each of these sites. The first entry in table SITE contains the site name for the host switching office, along with its operator verification trunk group VER90.

The Star Hub requires an entry in this table. The entry contains the following:

- remote site name for the Star Hub
- operator verification trunk group
- REMOTEVER90

The entry also contains the three signal distribution (SD) points assigned to critical, major, and minor alarms for the Star Hub.

> ***Note:*** This datafill reserves three of the seven SD points in one Star Hub SD group. The four remaining SD points in this SD group cannot be assigned to lines for line features.

If there is more than one Star Hub at each remote site, each Star Hub must be given a different site name.

The following table shows the datafill specific to Basic call processing for table SITE. Only those fields that apply directly to Basic call processing are shown.

For a description of the other fields, refer to the data schema section of the *Translations Guide*.

Datafilling table SITE (Sheet 1 of 2)

Field	Subfield or refinement	Entry	Explanation and action
NAME		alphanumeric (up to 4 characters)	Site name. Enter the site name assigned to the remote switching unit. The first character must be alphabetic. Site names may be up to four characters in length. PM type names cannot be used for site names. ***Note:*** The first entry in this field is for the host switching unit.
LTDSN		00 to 99	LEN test desk site number. Enter a unique two-digit number required to dial the site that appears under field NAME.
MODCOUNT		0	Module count. Enter zero. This field is updated by the system when table LCMINV is datafilled.
OPVRCLLI		alphanumeric	Operator verification CLLI. Enter the CLLI assigned to the operator verification trunk group at the remote location.
ALMDATA		see subfields	Alarm data. This field is for remote locations only and consists of subfields ALMTYPE, TMTYPE, TMNO, TMCKTNO, and POINT.
	ALMTYPE	CR, MJ, and MN	Enter the alarm type: critical (CR), major (MJ), and minor (MN).
	TMTYPE	UMP	Enter the trunk module type (remote service module) where the miscellaneous SD point assigned to the alarm is located.
ALMDATA(continued)	TMNO	0 to 255	Enter the number assigned to the remote service module where the miscellaneous SD point assigned to the alarm is located.

Note 1: Memory is automatically allocated for a maximum of 32 sites.

Note 2: Changes to fields with multiple entries should be made in the PROMPT mode only. In nonprompt mode it is possible to leave out existing entries.

Note 3: Enter the continuation mark (+) in fields with multiple possible entries when more data is specified on the next line or more records will be entered. Enter the end mark ($) in fields with multiple possible entries after the last entry.

Basic call processing (continued)

Datafilling table SITE (Sheet 2 of 2)

Field	Subfield or refinement	Entry	Explanation and action
	TMCKTNO	0 to 27	Enter the trunk module circuit on the remote service module where the miscellaneous SD point assigned to the alarm is located.
	POINT	0 to 6	Enter the SD point number within the trunk module circuit number, which is assigned to the alarm.

Note 1: Memory is automatically allocated for a maximum of 32 sites.

Note 2: Changes to fields with multiple entries should be made in the PROMPT mode only. In nonprompt mode it is possible to leave out existing entries.

Note 3: Enter the continuation mark (+) in fields with multiple possible entries when more data is specified on the next line or more records will be entered. Enter the end mark ($) in fields with multiple possible entries after the last entry.

Datafill example for table SITE

The following example shows sample datafill for table SITE.

MAP display example for table SITE

```
     NAME
LTDSN     MODCOUNT          OPVRCLLI
                                                ALMDATA
_____________________________________________________________
     STAR
   05           2            RSMVER90        $
```

Datafilling table PMNODES

Table peripheral module nodes (PMNODES) is read only, used by the CM to control extended-multiprocessor system (XMS)-based peripheral module (XPM) unit node tables. Table PMNODES is automatically datafilled when entries are added or changed in inventory tables. An entry will exist in table PMNODES for all subtending nodes of each XPM. Fields will be updated to reflect CM control of configuration data tables (CDT) in the XPM nodes. As nodes are deleted, holes may appear in the table. These cannot always be filled

when a new node is added. Tuples in table PMNODES are managed so that all subtending nodes must have a higher index than their head node.

Datafilling table PMNODES (Sheet 1 of 3)

Field	Subfield or refinement	Entry	Explanation and action
TABKEY		0 to 4095 0 to 117	Table key. Two-part key, separated by a space, identifying the XPM where the unit node table is. The first part is host external node number. The second part is internal index number. Examples: The first key of an LTC with an external node number of 25 would be 25 1. The key of the first XPM attached to the LTC would be 25 2.
EXTNDNUM		0 to 4095	External node number. External number assigned by CM to the XPM identified in field TABKEY. Example: If the first XPM in the example above was an remote cluster controller (RCC) with an external node of 33 the key of 25 2 would reference XPM external node 33 in the LTC node tuple. The RCC would also have a node tuple key of 33 1 to represent that node.
NODETYPE		see list	Node type of XPM. Generic type of PM node. Examples: LTC_NODE, RCC_NODE, LCM_NODE, and RCS_NODE.
PMTYPE		see list	PM type. Specific PM type assigned to the node. Examples: RCC, LCM, STAR, SMSR, and LTC.
LEVEL		0 to 15	PM level. The number of device levels the XPM node is separated from in the messaging host. Begins at level 0 for messaging (head) XPMs. Examples: An LCM at level 2 attaches to the RCC at level 1. The RCC at level 1 attaches to the HOST LTC at level 0. The same LCM is at level 1 if the RCC tuple is at level 0.
MSGHOST		0 to 4095	Messaging host. External node responsible for transferring messages to this node. A messaging host must be capable of transferring messages. Examples: LTC and RCC. Examples of XPMs not capable of being a messaging host are: RCU and SMSR.

Basic call processing (continued)

Datafilling table PMNODES (Sheet 2 of 3)

Field	Subfield or refinement	Entry	Explanation and action
PHYSHOST		0 to 4095	Physical host. External node where XPM node is physically attached. Example: The LCME is physically attached to RCC at external node 33.
PORTS		0 to 127	Number of ports. Total number of P-side ports in the physical host required by this XPM node.
STPORT		0 to 255	Starting port. First P-side port in the physical host used by this XPM node.
TERMS		0 to 4095	Number of terminals. Total number of terminals in the physical host required by this XPM node.
STTERM		0 to 8675	Starting terminal. First terminal in the physical HOST used by this XPM node.
PROTOCOL		alphanumeric	Message protocol. Type of message protocol used by the physical host to node links. Examples: MDS30, MDMSX, MHDLC
MS		M or S	Master or slave. M if this node contains the master clock.
IPML		Y or N	Inter-peripheral message link (IPML). Y if this node is configured as part of an IPML.
MODE		T or P	Table entry mode. Entries in table are made by terminal (T) or port (P) indexing.
SLLCON		Y or N	Site line load control. Y if this node is at a site using Essential Line Service Protection (ESP) or other site line load control features.
NT6X28		N	Uses NT6X28 card. Y if this XPM uses the NT6X28 card. The NT6X28 signaling interface card is used on the International Digital Trunk Controller (IDTC). Always enter N.
LCMLGMEM		Y or N	LCM large memory. Y if this XPM is an LCM with large memory (256k bytes).
RSVPORTS		Y or N	Reserved ports. Y if this XPM has ports that are reserved for messaging.
RSVTERMS		Y or N	Reserved terminals. Y if this XPM has terminals that are reserved for messaging.

Datafilling table PMNODES (Sheet 3 of 3)

Field	Subfield or refinement	Entry	Explanation and action
MATENODE		Y or N	Mate node. Y if this node is part of a dual configuration.
PACKED		Y or N	Packed internal tables. Y if internal node tables are packed on this node. Prior to this feature the node table was compressed when the XPM was RTS with the NODATASYNC option. Compression will now only happen when both units of an XPM ar taken out-of-service (OOS) and loaded by the CM.
SUPPCDT		Y Y	Support configuration data table (CDT). Y for each unit if CDT management is supported.
CMINCTRL		Y or N	CM node control. Y if the node is under CM control.

Datafill example for table PMNODES

The following example shows datafill for the host LTC and the STAR.

MAP display example for table PMNODES

```
Table: PMNODES

  TABKEY  EXTNDNUM   NODETYPE   PMTYPE LEVEL MSGHOST  PHYSHOST  PORTS
STPORT  TERMS STTERM  PROTOCOL MS IPML MODE SLLCON NT6X28 LCMLGMEM RSVPORTS
RSVTERMS MATENODE  PACKED SUPPCDT CMINCTRL
-------------------------------------------------------------------------
  25   1        25   LTC_NODE     LTC      0      25        25     16
     0    641      1   MDS30A   S    N    P      N      N        N        Y
       Y        N      Y       YY        Y

  47   2        56   LCM_NODE    STAR     1       47        47     18
    16    1216    642  MHDLC    M    N     P      N      N        Y        Y
       Y        N      Y       YY        Y
```

Datafilling table LTCINV

Table LTCINV, line trunk controller inventory, contains all inventory data except P-side link assignment for the LTC or LGC. Memory is automatically allocated in table LTCINV for a maximum of 255 tuples.

Basic call processing (continued)

Table LTCINV must contain an entry for the host LTC+ or LGC+ that connects the Star Hub to the DMS-100 network. Table LTCINV identifies the following types:

- type and location of the host controllers peripheral equipment
- executive programs
- C-side links

The C-side links connect the host LTC+ or LGC+ to the network.

The following table shows the datafill specific to Basic call processing for table LTCINV. Only those fields that apply directly to Basic call processing are shown.

For a description of the other fields, refer to the data schema section of the *Translations Guide*.

Datafilling table LTCINV (Sheet 1 of 4)

Field	Subfield or refinement	Entry	Explanation and action
LTCNAME		see subfields	Line trunk controller name. Contains subfield XPMTYPE and XPMNO.
	XPMTYPE	LTC or LGC	XPM type. Enter LTC if trunking is to be supported. Enter LGC if lines only are to be supported.
	XPMNO	numeric	XPM number. Range for SuperNode: 0 to 255.
Note 1: Memory is automatically allocated for a maximum of 128 tuples for table LTCINV.			
Note 2: Changes to fields with multiple entries should be made in the PROMPT mode only. In nonprompt mode it is possible to leave out existing entries.			
Note 3: Enter the continuation mark (+) in fields with multiple possible entries when more data is specified on the next line or more records will be entered. Enter the end mark ($) in fields with multiple possible entries after the last entry.			

Basic call processing (continued)

Datafilling table LTCINV (Sheet 2 of 4)

Field	Subfield or refinement	Entry	Explanation and action
ADNUM		numeric	Peripheral module administrative number. Enter the administrative number associated with the peripheral module (PM). The range is 0 to 4095. ***Note 1:*** The value of field ADNUM must be unique across all PM inventory tables (DLMINV, IPEINV, LCMINV, LMINV, LTCINV, RCCINV, RCSINV, RCTINV, and VSRINV). Attempts to add a PM with an ADNUM already in use are rejected. The system prompts the user with the next available ADNUM value. ***Note 2:*** Field ADNUM cannot be changed if the operational measurements (OM) counts for that PM are included in an Engineering and Administrative Data Acquisition System (EADAS) or data collection (DC) section associated with the OM groups LMD or UTR.
FRTYPE		LTE or LGE	Frame type. Enter LTE for the LTC. ***Note:*** Enter the location of this PM in fields FRNO, SHPOS, FLOOR, ROW, and FRPOS.
EQPEC		6X02AG or 6X02AH	Product equipment code. Enter 6X02AG for an LTC or 6X02AH for an LGC.
LOAD		alphanumeric	Load. Enter the PM load listed in table PMLOADS.
EXECTAB		see subfields	Executive table. Contains subfields TRMTYPE and EXEC. The terminal type and its associated execs are datafilled together.

Note 1: Memory is automatically allocated for a maximum of 128 tuples for table LTCINV.

Note 2: Changes to fields with multiple entries should be made in the PROMPT mode only. In nonprompt mode it is possible to leave out existing entries.

Note 3: Enter the continuation mark (+) in fields with multiple possible entries when more data is specified on the next line or more records will be entered. Enter the end mark ($) in fields with multiple possible entries after the last entry.

Basic call processing (continued)

Datafilling table LTCINV (Sheet 3 of 4)

Field	Subfield or refinement	Entry	Explanation and action
	TRMTYPE	alphanumeric	Terminal type. Enter the type of terminal models to be used: • POTS for regular lines • KSET for EBS terminals • ABTRK for regular trunks • RMM_TERM for MTC trunks
	EXEC	alphanumeric	Executive Programs. Enter the execs associated with the terminal type (POTSEX, KSETEX, RSMEX, and DTCEX).
CSLNKTAB		see subfields	C-side link table. Contains subfields NMNO and NMPORT.
	NMNO	0 to 63	Network module number. Enter the network module pair where the PM is assigned.
	NMPORT	0 to 64	Network module port. Enter the network port corresponding to the above network pair.
OPTCARD		alphanumeric	Optional card. Enter when the LTC includes the UTR, message, and CMR cards. If the CMR card is included, enter the CMRLOAD. The NTMX76 card is required to support the Star Hub, add MSGMX76.
CMRLOAD		alphanumeric	Class modem resource load. Enter the CMR software load.
TONESET		NORTHAM	Tone set. Enter NORTHAM for North America.

Note 1: Memory is automatically allocated for a maximum of 128 tuples for table LTCINV.

Note 2: Changes to fields with multiple entries should be made in the PROMPT mode only. In nonprompt mode it is possible to leave out existing entries.

Note 3: Enter the continuation mark (+) in fields with multiple possible entries when more data is specified on the next line or more records will be entered. Enter the end mark ($) in fields with multiple possible entries after the last entry.

Datafilling table LTCINV (Sheet 4 of 4)

Field	Subfield or refinement	Entry	Explanation and action
PROCPEC		alphanumeric	Processor PEC. Enter the PEC of the card in LTC units 0 and 1. The PEC must reflect minimum firmware capabilities in the processor complex of each unit. PEC MX77AA has been added for XPM PLUS.
EXTLINKS		0 to 6	Number of extended links. Enter the number of pairs of extended links.
E2LOAD		alphanumeric	EEPROM file. Contains the name of the loadfile loaded in the NTMX77AA EEPROM.
OPTATTR		blank	Optional attribute. This field is for a DTC supporting CCS7. Leave this field blank.
PEC6X40		alphanumeric	6X40 equipment PEC. Enter the version of the NT6X40 to be used.

Note 1: Memory is automatically allocated for a maximum of 128 tuples for table LTCINV.

Note 2: Changes to fields with multiple entries should be made in the PROMPT mode only. In nonprompt mode it is possible to leave out existing entries.

Note 3: Enter the continuation mark (+) in fields with multiple possible entries when more data is specified on the next line or more records will be entered. Enter the end mark ($) in fields with multiple possible entries after the last entry.

Datafill example for table LTCINV

The following example shows sample datafill for table LTCINV.

Basic call processing (continued)

MAP display example for table LTCINV

```
LTCNAME
 ADNUM FRTYPE FRNO SHPOS FLOOR ROW FRPOS EQPEC LOAD
                                                EXECTAB
                                               CSLNKTAB
                                               OPTCARD
 TONESET                                       PROCPEC
                                  EXTLINKS
                     E2LOAD
                                               OPTATTR
PEC6X40                             EXTINFO
_____________________________________________________
LTC 0
    1005 LGE    5    18    1   B 5 6X02AG ECL11BI
        (POTS POTSEX) (  KEYSET KSETEX) (RMM_TERM RSMEX)$
    (9 17) (13 61) (5 14)(0 29)(1 30)(2 31)(3 28)(4 29)$
                (  UTR15) (  CMR18 CMR07A) (MSGMX76 HOST)$
NORTHAA  MX77AA  MX77AA
                0
                  HBFWQF01
                                             $
6X40FA                          N
```

Datafilling table LTCPSINV

Table line trunk controller P-side link inventor (LTCPSINV) contains the assignments of the peripheral side (P-side) links for the LTC.

The key for table LTCPSINV is the same as table LTCINV. Memory is automatically allocated in table LTCPSINV for a maximum of 128 tuples.

The list of links in table LTCPSINV should include the DS-1 links that connect the LTC+ to the Star Hub.

The following table shows the datafill specific to Basic call processing for table LTCPSINV. Only those fields that apply directly to Basic call processing are shown.

For a description of the other fields, refer to the data schema section of the *Translations Guide*.

Datafilling table LTCPSINV

Field	Subfield or refinement	Entry	Explanation and action
LTCNAME		see subfields	Link trunk controller name. Contains subfields XPMTYPE and XPMNO
	XPMTYPE	LTC or LGC	PM type. Enter LTC or LGC to support the Star Hub.
	XPMNO	0 to 255	PM number. Peripheral module number assigned to this PM.
PSLNKTAB		0 to 19	P-side link table. Contains subfields PSLINK and PSDATA.
	PSLINK	0 to 19	P-side link. Enter the P-side port number.
	PSDATA	DS-1	P-side data. Enter DS-1 for Star Hub. ***Note:*** If PSDATA is DS-1, fill in fields CARRIDX and ACTION.
PSLNKTAB(continued)	CARRIDX	DEFAULT	Carrier index. Enter the name to index into table CARRMTC. Enter DEFAULT for the default template in table CARRMTC.
	ACTION	N	Action. Enter Y if the carrier should be removed from service when the out-of-service limit for frame, slip, errored-second, or severe errored-second is exceeded.

Note 1: Memory is automatically allocated for a maximum of 128 tuples for table LTCPSINV.

Note 2: Changes to fields with multiple entries should be made in the PROMPT mode only. In nonprompt mode it is possible to leave out existing entries.

Note 3: Enter the continuation mark (+) in fields with multiple possible entries when more data is specified on the next line or more records will be entered. Enter the end mark ($) in fields with multiple possible entries after the last entry.

Datafill example for table LTCPSINV

The following example shows sample datafill for table LTCPSINV.

Basic call processing (continued)

MAP display example for table LTCPSINV

```
LTCNAME                                                    PSLNKTAB
_____________________________________________________________________
LTC  1
N (0 DS1 64KB Y) (1 DS1 64KB Y) (2 DS1 64KB Y)
(3 DS1 64KB Y) (4 DS1 64KB Y) (5 DS1 64KB Y)
(6 DS1 64KB Y)(7 DS1 64KB Y) (8 NILTYPE)
(9 NILTYPE)(10 NILTYPE)(11 NILTYPE)(12 NILTYPE)
(13 NILTYPE)(14 NILTYPE)(15 NILTYPE)(16 NILTYPE)(17 NILTYPE)
(18 NILTYPE)(19 NILTYPE) $
```

Datafilling table RCCINV

When you delete, replace or add a C-side link, that link and all links that follow must be busied. The links must be busied before you make modifications in table RCCINV.

The addition of the NILPORT option to field CSLNKTAB of table RCCINV provides the capability to skip links. The NILPORT option allows the system to skip ports when you enter RCC2 C-side DS-1 link. If a port must remain unequipped, enter NILPORT.

The entries for table RCCINV appear in the following procedure. This procedure contains the fields that apply to basic call processing. Refer to the *Translations Guide* for a description of the other fields. Field FRTYPE

contains additional values. One additional field contains the name of the loadfile for the EEPROM.

Note: When you delete, replace, or add a C-side link, you must busy that affected link affected and all links that follow. You must busy the links before you make modifications in table RCCINV.

Datafilling table RCCINV (Sheet 1 of 5)

Field	Subfield or refinement	Entry	Explanation and action
RCCNAME		refer to subfields	The RCC2 name. Contains subfields SITE, PMTYPE and RCCNO.
	SITE	character	Site. Enter the site name assigned to the remote location. This entry must also appear in table SITE.
	PMTYPE	RCC2	The PM type. Enter RCC2 for the RCC2 that is not ISDN.
	RCCNO	numeric	RCC2 Number. This number is different by office and not by site.
FRTYPE		CRSC or CEXT	Frame type. Enter CRSC for the RCC2 shelf. Enter CEXT for the RCC2 extension shelf.
Enter the location of the RCC2 in fields FRNO, SHPOS, FLOOR, ROW, and FRPOS.			
EQPEC		alphanumeric	Equipment PEC. Enter the PEC MX85AA for the RCC2.
LOAD		alphanumeric	Load. Enter the load for the RCC2. Make sure that table PMLOADS contains this table.
EXECTAB		see subfields	The EXEC table. Contains subfields TRMTYPE, EXEC and CONTMARK. As with LTCINV, each terminal type associates with specified execs. ***Note:*** You can change fields with multiple entries in the PROMPT mode only.
Note: When you enter data in field C-side link table (CSLNKTAB), do not assign message links to the same interface card. When the interface card supports a minimum of two links, separate the message links by the number of links on the interface cards. The separation applies to all interface link types: DS-1, DS30, DS30A or PCM-30. Table control issues a warning if you attempt to assign message links on the same interface card. If you assign message links to the same interface card, an E1 outage can occur if the card fails. An E1 outage is a failure of all message links.			

Basic call processing (continued)

Datafilling table RCCINV (Sheet 2 of 5)

Field	Subfield or refinement	Entry	Explanation and action
	TRMTYPE	alphanumeric	Terminal type. Enter the type of terminal models for use. The plain old telephone service (POTS) is for normal lines. The KEYSET is for EBS/data lines. The RMM_TERM is for remote MTC trunks. The ABTRK is for normal trunks. The ESA is for ESA lines. The MX5X09 is for Meridian 9-button sets. The M5X12 is for Meridian 12-button sets.
	EXEC	character	Executive programs. Enter the execs associated with the terminal type. Examples are POTSEX, KSETEX, DTCEX, ESAEX and RSMEX.
	CONTMARK	+ or $	Continuation mark. Where the record is other than the last for a specified scan point, enter a plus sign (+). The plus sign indicates that the next record contains data for the scan point. Where the record is the last for a specific scan point, enter a dollar sign ($).
CSPM		refer to subfields	The C-side PM. Contains subfields PMTYPE and XPMNO.
	PMTYPE	LTC or LGC	The PM type. Enter the type of peripheral to which the RCC2 attaches. Note that this LTC or LGC can be part of a host ISDN configuration. DFI was added to the entry value range.
	XPMNO	numeric	The PM number. Enter the PM number to which the RCC2 C-side attaches. Ranges: 0-127 for NT40, 0-255 for SuperNode.

Note: When you enter data in field C-side link table (CSLNKTAB), do not assign message links to the same interface card. When the interface card supports a minimum of two links, separate the message links by the number of links on the interface cards. The separation applies to all interface link types: DS-1, DS30, DS30A or PCM-30. Table control issues a warning if you attempt to assign message links on the same interface card. If you assign message links to the same interface card, an E1 outage can occur if the card fails. An E1 outage is a failure of all message links.

Basic call processing (continued)

Datafilling table RCCINV (Sheet 3 of 5)

Field	Subfield or refinement	Entry	Explanation and action
CSLNKTAB		numeric	The C-side link table. This vector can have a maximum of 16 entries. Enter the LTC P-side DS-1 links (0-19) assigned to the RCC2 C-side. All links for an RCC2 must connect to the same LTC. Assign message links (first and third entries) to different shelves (units) of the frame. This process makes sure that damage or power failure does not affect service. The subfield is CONTMARK. ***Note:*** You can change fields with multiple entries in the PROMPT mode only.
	CONTMARK	+ or $	Continuation mark. Where the record is other than the last for a specified scan point, enter a plus sign (+). The plus sign indicates that the next record contains additional data for the scan point. Where the record is the last for a specified scan point, enter a dollar sign ($).
ESA		Y or N	Emergency stand alone. Enter Y (yes) or N (no). Entry Y assigns ESA capability to the RCC2.
INTRASW		Y or N	Intraswitching. Controls intraswitching.

Note: When you enter data in field C-side link table (CSLNKTAB), do not assign message links to the same interface card. When the interface card supports a minimum of two links, separate the message links by the number of links on the interface cards. The separation applies to all interface link types: DS-1, DS30, DS30A or PCM-30. Table control issues a warning if you attempt to assign message links on the same interface card. If you assign message links to the same interface card, an E1 outage can occur if the card fails. An E1 outage is a failure of all message links.

Basic call processing (continued)

Datafilling table RCCINV (Sheet 4 of 5)

Field	Subfield or refinement	Entry	Explanation and action
OPTCARD		alphanumeric	Optional card. This card is a vector with a maximum of 10 entries. For the RCC2, the ISP card must use slot 4. Slots 6 and 7 are for the global tone receiver (GTR) or universal tone receiver (UTR) card. The CMR card can occupy slot 5 in unit 0 and slot 23 in unit 1. With the CMR card, the C-side and P-side can support 10 DS-1s. ***Note 1:*** Unit 0 requires datafill for the CMR and UTR. ***Note 2:*** Do not mix the GTR and UTR on the same RCC2. At this time, a method to determine which receiver interprets the tone samples is not available. A UTR card interprets call processing tones that are for GTR use. This process can degrade the tones. Examples: The CMR5, ISP16, UTR6 and UTR7. An RCC2 with extended distance capability (EDC) requires the MSGMX76 card. Enter MSGMX76 REM HDLC to activate dynamic InSv upgrade from DMS-X to HDLC. The default is MSG6X69 REM DMSX. The DMS-X to HDLC dynamic upgrade cannot occur in the inactive CM. ***Note:*** You can change fields with multiple entries in the PROMPT mode only.
CMRLOAD		alphanumeric	Class modem resource load. Enter the CMR loadname.

Note: When you enter data in field C-side link table (CSLNKTAB), do not assign message links to the same interface card. When the interface card supports a minimum of two links, separate the message links by the number of links on the interface cards. The separation applies to all interface link types: DS-1, DS30, DS30A or PCM-30. Table control issues a warning if you attempt to assign message links on the same interface card. If you assign message links to the same interface card, an E1 outage can occur if the card fails. An E1 outage is a failure of all message links.

Datafilling table RCCINV (Sheet 5 of 5)

Field	Subfield or refinement	Entry	Explanation and action
NT7X05AA		NT7X05AA	If you enter NT7X05AA, the system prompts for the slot_number. Slot numbers for the NT7X05AA in RCC2 are 5 and 23, or 7 and 21. ***Note:*** If you use the CMR card, use slot numbers 7 and 21. Slots 5 and 23 are for the CMR card. If the CMR card is not provisioned, use slots 5 and 23 or 7 and 21.
TONESET		character	Tone set. Enter NORTHAM for North America. If the NT6X69AD card is added for ADSI compliance, enter NORTHAA. Enter a blank for DEFAULT for any other conditions.
PROCPEC		MX77AA, MX77AA or AX74AA, AX74AA	Processor equipment product code (PEC). Enter the PEC of the processor card in unit 0 and 1 of the RCC2. The PEC must reflect minimum firmware capabilities in the processor complex of each unit. Value AX74AA is an addition to this feature.
E2LOAD		alphanumeric	The EEPROM file. Contains the name of the loadfile in the NTMX77AA EEPROM or the optional NTAX74AA EEPROM.
Note: When you enter data in field C-side link table (CSLNKTAB), do not assign message links to the same interface card. When the interface card supports a minimum of two links, separate the message links by the number of links on the interface cards. The separation applies to all interface link types: DS-1, DS30, DS30A or PCM-30. Table control issues a warning if you attempt to assign message links on the same interface card. If you assign message links to the same interface card, an E1 outage can occur if the card fails. An E1 outage is a failure of all message links.			

Datafill example for table RCCINV

The following examples show sample entries for table RCCINV. The sample entries are for an RCC2 with the NTMX77AA UP and an RCC2 with the optional NTAX74AA CAP.

Basic call processing (continued)

MAP display example for table RCCINV

```
Table: RCCINV

RCCNAME      FRTYPE FRNO SHPOS FLOOR ROW FRPOS  EQPEC    LOAD
-------------------------------------------------------------------
CARY RCC2 0
     1101 CRSC   0     5    0     C   0         MX85AA   CRI111BD

EXECTAB                                                  CONTMARK
-------------------------------------------------------------------
(POTS POTSEX) (KEYSET KSETEX) (RMM_TERM RSMEX) (ESALINES ESAEX) $


CSPM        CSLNKTAB                                     CONTMARK
-------------------------------------------------------------------
LTC 1      (0) (1) (2) (3) (4) (5) (6) (7)                      $

ESA  INTRASW    OPTCARD       CMRLOAD                    CONTMARK
-------------------------------------------------------------------
Y    Y   (UTR6) (NT7X05AA 7) (MSG6X69) (CMR5 CMRAG03) (ISP16)   $

TONESET   PROCPEC          E2LOAD     EXTINFO
-------------------------------------------------------------------
NORTHAM    MX77AA  MX77AA    UPFWN004  CEXT 0 4 0 E 15 MX86AA L
```

Note 1: xx in field LOAD represents alphanumeric text. An example is B1.

Note 2: If the shelf has a processor that is not the NTMX77, the system enters the value of NILLOAD in field E2LOAD.

Note 3: You can enter AX74AA AX74AA instead of MX77AA MX77AA in field PROCPEC. When you enter AX74AA, the load name prefix in field LOAD changes from `CRI` to `XRI`. For example, `CRI08xx` (for MX77) changes to `XRI08XX` (for AX74AA). The following example shows sample entries for table RCCINV when data for the NTAX74AA CAO is entered in the RCC2.

MAP display example for NTAX74AA CAP datafill for table RCCINV.

```
Table: RCCINV

RCCNAME      FRTYPE FRNO SHPOS FLOOR ROW FRPOS  EQPEC    LOAD
-------------------------------------------------------------------
CARY RCC2 0
     1101 CRSC   0     5    0     C   0         MX85AA   XRI08xx

EXECTAB                                                  CONTMARK
-------------------------------------------------------------------
(POTS POTSEX) (KEYSET KSETEX) (RMM_TERM RSMEX) (ESALINES ESAEX) $


CSPM        CSLNKTAB                                     CONTMARK
-------------------------------------------------------------------
LTC 1      (0) (1) (2) (3) (4) (5) (6) (7)                      $


ESA  INTRASW    OPTCARD       CMRLOAD                    CONTMARK
-------------------------------------------------------------------
Y    Y           (MSG6X69)  (UTR6)(CMR5 CMRAG03) (ISP16)       $

TONESET   PROCPEC          E2LOAD     EXTINFO
-------------------------------------------------------------------
NORTHAM    AX74AA  AX74AA    AX74xxxx  CEXT 0 4 0 E 15 MX86AA L
```

Datafilling table RCCPSINV

Table Remote Cluster Controller P-side link Inventory (RCCPSINV) contains only the P-side link assignments for the RCC2. You can enter a maximum of 54 (0-53) multiples of P-side link information for the RCC2.

> ***Note:*** Only DS-1 C-side link 0 and link 2 are necessary. Table RCCPSINV, the data control table for P-side links, requires that you enter data for link 1 before you enter data for link 2. If the table requires only two links, link 1 remains ManB. The table normally requires more than two links. You must enter data for three links in this table.

When you add an extension shelf, datafill restrictions apply for RCC2 P-side links that connect to the extension shelf. The DS-1 and D-channel handler (DCH) links connect to the extension shelf. You can enter data for these links only if you enter data for an extension shelf in RCCINV. You must change all links that connect to the extension shelf from DS-1/DCH to NILTYPE or DS30A in RCCPSINV. You must change these links before you delete the extension shelf from table RCCINV.

Basic call processing (continued)

The following table describes the entries for Basic call processing for table RCCPSINV. Only the fields that apply directly to Basic call processing appear. Refer to the *Translations Guide* for a description of additional fields.

Datafilling table RCCPSINV for RSC-S basic call processing (Sheet 1 of 2)

Field	Subfield or refinement	Entry	Explanation and action
RCCNAME		refer to subfields	The RCC2 name. Enter the name of the RCC2. Subfields: SITE, PMTYPE, and RCCNO.
	SITE	character	Site. Enter the site name assigned to the remote location. The site name must appear in table SITE.
	PMTYPE	RCC2	The PM type. Enter RCC2 for the RCC2 that is not ISDN.
	RCC2NO	0-127	The RCC2 number.
PSLNKTAB		refer to subfields	The P-side link table. Subfields: PSLINK, PSDATA, and CONTMARK. Enter the vector. ***Note:*** You can change fields with multiple entries in the PROMPT mode only.
	PSLINK	0-53	The P-side link. Enter the RCC2 P-side port number.
Note: The AREASELCT value determines the PSDATA fields entered. If AREASELCT is DS30A, DCH, or NILTYPE, other fields do not require datafill. If PSDATA is DS-1, complete fields CARRIDX and ACTION.			

Basic call processing (continued)

Datafilling table RCCPSINV for RSC-S basic call processing (Sheet 2 of 2)

Field	Subfield or refinement	Entry	Explanation and action
	PSDATA	alphanumeric	The P-side link data. Enter DS-1 for links to remote-off-remote. Enter DS30A for links to RMMs or LCMs. Enter NILTYPE for other links. The RCC2 DS1 links are from 0 to 21. The DS30A links are from 21 to 53. The DS1 links 1-7 and 9-19 are available for remotes. The DS30A links 22 and 23 are reserved for the RMM. The DS30A links 24 to 53 connect to LCMs. ***Note:*** A minimum of four in table LCMINV must separate the message link (0 and 1) assignments for LCMs that attach to RCC2s. The RCC2 NTMX74 I/F cards support 4 links each. Failure of an NTMX74 can cause an E1 outage if all message links of an LCM reside on the card.
CARRIDX		character	Carrier index. Enter the name to index in table CARRMTC. Enter a blank for the default template in table CARRMTC.
ACTION		Y	Action. Enter Y if the carrier must be removed from service when the OOS limit for the following components exceeds the OOS limit: • frame • slip • errored-second • severe errored-second
Note: The AREASELCT value determines the PSDATA fields entered. If AREASELCT is DS30A, DCH, or NILTYPE, other fields do not require datafill. If PSDATA is DS-1, complete fields CARRIDX and ACTION.			

Datafill example for table RCCPSINV

The following example shows sample entries for RSC-S basic call processing in table RCCPSINV.

Basic call processing (continued)

MAP display example for table RCCPSINV

```
Table: RCCPSINV

RCCNAME      PSLNKTAB
------------------------------------------------------------
CARY RCC2 0  (0 DS-1 DEFAULT N) (1 DS-1 DEFAULT N)
(2 DS-1 DEFAULT N) (3 DS-1 DEFAULT N) (4 DS-1 DEFAULT N)
(5 DS-1 DEFAULT N) (6 DS-1 DEFAULT N) (7 DS-1 DEFAULT N)
(8 NILTYPE) (9 NILTYPE) (10 NILTYPE) (11 NILTYPE)
...
...
(21 DS30A) (22 DS30A) (23 DS30A) (24 DS30A)
(25 DS30A) (26 DS30A) (27 DS30A) (28 DS30A)
...
...
(44 NILTYPE) (45 NILTYPE) (46 NILTYPE) (47 NILTYPE)
(48 NILTYPE) (49 NILTYPE) (50 NILTYPE) (51 NILTYPE)
(52 NILTYPE) (53 NILTYPE)  $
```

Datafilling table CARRMTC

The carrier maintenance control (CARRMTC) table allows the DMS switch administration to enter the following information:

- maintenance control information in peripherals
- out-of-service limits for alarms
- system RTS occurrences

A maximum of 16 entries are present for each type of peripheral that can provide carrier links in the switch. The choice of entries for each carrier is datafilled in the inventory table of the C-side peripheral, table LTCPSINV.

The following checks are made between table CARRMTC and table LTCPSINV:

- When a carrier index (CARRIDX) is datafilled in table LTCPSINV, an entry for the peripheral module type, in this case the LTC, must already be present in table CARRMTC.
- When an entry is deleted from table CARRMTC, that entry cannot be referenced by any carriers in table LTCPSINV. Otherwise, the deletion command is rejected.
- When an existing entry in table CARRMTC is changed, table LTCPSINV is checked to determine if that entry is referenced by in-service carriers. If

so, the change command is rejected and a list of the in-service carriers is displayed.

The following table shows the datafill specific to Basic call processing for table CARRMTC. Only those fields that apply directly to Basic call processing are shown.

For a description of the other fields, refer to the data schema section of the *Translations Guide*.

Datafilling table CARRMTC (Sheet 1 of 5)

Field	Subfield or refinement	Entry	Explanation and action
CSPMTYPE		LGC, LTC, RCC2, STAR	C-side node PM type. Enter the PM type of the node on the C-side of the carrier link; in this case, STAR.
TMPLTNM		alphanumeric (up to 16 characters)	Template name. Enter the template name (up to 16 characters) for the PM. Default value: DEFAULT. In this case, DS1HUB
RTSML		0 to 255	Return-to-service maintenance limit. Enter the number of times during the audit interval a carrier can be returned to service by the system before a warning is issued. Value 255 disables this feature.

Note 1: The DMS switch adds the first tuple for LTC to table CARRMTC automatically during initial program load (IPL) or first restart after IPL. The entry is designated as index 0 and has the value DEFAULT in the TMPLTNM field and default values for the other fields. This tuple cannot be deleted, and only fields ES, SES, and thresholds for frame and slip losses can be changed.

Note 2: Tuples other than the default tuple must be added manually before they can be referenced in table LTCPSINV. These tuples can be deleted only if no DS-1 carriers are associated with them.

Note 3: Tuples can be changed in table CARRMTC only if the associated DS-1 carriers are ManB or OffL.

Note 4: Changes to fields with multiple entries should be made in the PROMPT mode only. In nonprompt mode it is possible to leave out existing entries.

Note 5: Enter the continuation mark (+) in fields with multiple possible entries when more data is specified on the next line or more records will be entered. Enter the end mark ($) in fields with multiple possible entries after the last entry.

Basic call processing (continued)

Datafilling table CARRMTC (Sheet 2 of 5)

Field	Subfield or refinement	Entry	Explanation and action
RTSOL		0 to 255	Return to service out-of-service limit. Enter the number of times during an audit interval a carrier can be returned to service by the system before it is placed permanently out of service. Value 255 disables this feature.
ATTR		see subfields	Attribute. This field is comprised of subfield SELECTOR.
	SELECTOR	DS1	Selector. Enter carrier type DS-1.
	CARD	NT6X50AB NTMX81AA	Card. Enter the product engineering code (PEC) of the DS-1 interface card used. Enter NT6X50AB to support ISDN 64 Kbit/s clear channels. Enter NTMX81AA to support ISDN 64 Kbit/s clear channels.from a Star Hub.
	VOICELAW	A_LAW or MU_LAW	Voice law. Enter the voice law used in the carrier. A_LAW is used mainly in international switches. MU_LAW is used mainly in North American switches.
	FF	SF or ESF	Frame format. Enter ESF (extended super frame) in this field.

Note 1: The DMS switch adds the first tuple for LTC to table CARRMTC automatically during initial program load (IPL) or first restart after IPL. The entry is designated as index 0 and has the value DEFAULT in the TMPLTNM field and default values for the other fields. This tuple cannot be deleted, and only fields ES, SES, and thresholds for frame and slip losses can be changed.

Note 2: Tuples other than the default tuple must be added manually before they can be referenced in table LTCPSINV. These tuples can be deleted only if no DS-1 carriers are associated with them.

Note 3: Tuples can be changed in table CARRMTC only if the associated DS-1 carriers are ManB or OffL.

Note 4: Changes to fields with multiple entries should be made in the PROMPT mode only. In nonprompt mode it is possible to leave out existing entries.

Note 5: Enter the continuation mark (+) in fields with multiple possible entries when more data is specified on the next line or more records will be entered. Enter the end mark ($) in fields with multiple possible entries after the last entry.

Datafilling table CARRMTC (Sheet 3 of 5)

Field	Subfield or refinement	Entry	Explanation and action
ATTR	ZLG	ZCS or B8ZS	Zero logic. Enter binary eight bit zero substitution (B8ZS) in the ZLG field. ***Note 1:*** Enter B8ZS when the high data link controller (HDLC) messaging protocol supported is link access protocol on the D-channel (LAPD). ***Note 2:*** Only the NT6X50AB or the NTMX81AA card supports bipolar 8-bit zero substitution (B8ZS).
	BERB	BPV or CRC	Bit error rate base. Enter BPV for bipolar violation for DS-1 error detection algorithm.
	DLK	NILDL	Data link. Currently, only NILDL is supported.
	IAT	Y or N	Inhibit alarm transmit. Enter Y for the IAT field to inhibit yellow alarms.
	LCGAST	1 to 9999	Local carrier group alarm set. Enter the threshold value in units of 10 ms. The value for the Star Hub is 1000 for a threshold of 10000.
	LCGACL	1 to 9999	Local carrier group alarm clear threshold. Enter the threshold value in units of 10 ms. The value for the Star Hub is 1000 for a threshold of 10000.

Note 1: The DMS switch adds the first tuple for LTC to table CARRMTC automatically during initial program load (IPL) or first restart after IPL. The entry is designated as index 0 and has the value DEFAULT in the TMPLTNM field and default values for the other fields. This tuple cannot be deleted, and only fields ES, SES, and thresholds for frame and slip losses can be changed.

Note 2: Tuples other than the default tuple must be added manually before they can be referenced in table LTCPSINV. These tuples can be deleted only if no DS-1 carriers are associated with them.

Note 3: Tuples can be changed in table CARRMTC only if the associated DS-1 carriers are ManB or OffL.

Note 4: Changes to fields with multiple entries should be made in the PROMPT mode only. In nonprompt mode it is possible to leave out existing entries.

Note 5: Enter the continuation mark (+) in fields with multiple possible entries when more data is specified on the next line or more records will be entered. Enter the end mark ($) in fields with multiple possible entries after the last entry.

Basic call processing (continued)

Datafilling table CARRMTC (Sheet 4 of 5)

Field	Subfield or refinement	Entry	Explanation and action
	RCGAST	1 to 9999	Remote carrier group alarm set. Enter the threshold value in units of 10 ms. The value for the Star Hub is 5 for a threshold of 50.
	RCGACL	1 to 9999	Remote carrier group alarm clear threshold. Enter the threshold value in units of 10 ms. The value for the Star Hub is 5 for a threshold of 50.
	AISST	1 to 9999	Alarm indication signal set threshold. Enter the threshold value in units of 10 ms. The value for the Star Hub is 150 for a threshold of 1500.
AISCL		1 to 9999	Alarm indication signal clear threshold. Enter the threshold value in units of 10 ms. The value for the Star Hub is 1000 for a threshold of 10000.
BEROL		3 to 6	Bit error rate out-of-service limit. Enter the bit error rate out-of-service limit expressed as the negative of the exponent of 10 (10E-n). The number 3, for example, represents a 1-in-1000 bit error rate. The value for the Star Hub is 6.
BERML		4 to 7	Bit error rate maintenance limit. Enter the bit error rate maintenance limit expressed as the negative of the exponent of 10 (10E-n). The value for the Star Hub is 3.
ES		0 to 9999	Error second (ES) threshold. Enter the threshold value in units of 10 ms.

Note 1: The DMS switch adds the first tuple for LTC to table CARRMTC automatically during initial program load (IPL) or first restart after IPL. The entry is designated as index 0 and has the value DEFAULT in the TMPLTNM field and default values for the other fields. This tuple cannot be deleted, and only fields ES, SES, and thresholds for frame and slip losses can be changed.

Note 2: Tuples other than the default tuple must be added manually before they can be referenced in table LTCPSINV. These tuples can be deleted only if no DS-1 carriers are associated with them.

Note 3: Tuples can be changed in table CARRMTC only if the associated DS-1 carriers are ManB or OffL.

Note 4: Changes to fields with multiple entries should be made in the PROMPT mode only. In nonprompt mode it is possible to leave out existing entries.

Note 5: Enter the continuation mark (+) in fields with multiple possible entries when more data is specified on the next line or more records will be entered. Enter the end mark ($) in fields with multiple possible entries after the last entry.

Datafilling table CARRMTC (Sheet 5 of 5)

Field	Subfield or refinement	Entry	Explanation and action
SES		0 to 9999	Severe error second (SES) threshold. Enter the threshold value in units of 10 ms.
FRAMEML		0 to 9999	Frame maintenance limit. Enter the maintenance limit for frame loss.
FRAMEOL		0 to 9999	Frame loss limit. Enter the out-of-service limit for frame loss. Note that FRAMEOL should be larger than FRAMEML.
SLIPML		0 to 9999	Slip maintenance limit. Enter the maintenance limit for slip.
SLIPOL		0 to 9999	Slip out-of-service limit. Enter the out-of-service limit for slip. Note that SLIPOL should be larger than SLIPML.

Note 1: The DMS switch adds the first tuple for LTC to table CARRMTC automatically during initial program load (IPL) or first restart after IPL. The entry is designated as index 0 and has the value DEFAULT in the TMPLTNM field and default values for the other fields. This tuple cannot be deleted, and only fields ES, SES, and thresholds for frame and slip losses can be changed.

Note 2: Tuples other than the default tuple must be added manually before they can be referenced in table LTCPSINV. These tuples can be deleted only if no DS-1 carriers are associated with them.

Note 3: Tuples can be changed in table CARRMTC only if the associated DS-1 carriers are ManB or OffL.

Note 4: Changes to fields with multiple entries should be made in the PROMPT mode only. In nonprompt mode it is possible to leave out existing entries.

Note 5: Enter the continuation mark (+) in fields with multiple possible entries when more data is specified on the next line or more records will be entered. Enter the end mark ($) in fields with multiple possible entries after the last entry.

Datafill example for table CARRMTC

The following example shows sample datafill for table CARRMTC.

Basic call processing (continued)

MAP display example for table CARRMTC

```
CSPMTYPE  TMPLTNM RTSML RTSOL                                          ATTR
_____________________________________________________________________________
LTC       64KB    255  255  DS1 NT6X50AB MU_LAW ESF B8ZS BPV NILDL N
                  250 1000 50 50 150 1000 3 6 864 100 17
                  511 4 255
STAR    DS1HUB    255  255  DS1 NTMX81AA MU_LAW ESF B8ZS
                  BPV NILDL N 250 1000 50 50 150 1000
                  6 3 864 100 17 511 4 255
```

Datafilling table LCMINV

The line concentrating module inventory (LCMINV) table lists the data assignment for each frame associated with a Star Hub unit. This table must include one entry for each Star Hub. Only fields that require datafill specific to this feature are shown.

Table LCMINV associates the site name provided in table SITE with the following:

- the location of the Star Hub
- PM software
- ringing data
- C-side links
- provisionable options

Note 1: The C-side links datafilled for the Star Hub in table LCMINV must correspond to those datafilled for the host LTC+ or LGC+ in table LTCPSINV.

Note 2: If LCMSELECTOR of field LCMINFO is set to STAR, table RMPCKT must also be datafilled.

The field BICTST provides a boolean indication of whether a particular Star Hub is to be included in the test schedule.

The following restrictions apply to Star Hubs with Star Modules connected on the P-side.

- Before relocating a Star Hub or moving its C-side links, all relevant special connections defined on its Star Modules in table SPECCONN must be deleted. ISDN lines on Star Modules do not need to be deleted,
- If you are moving a Star Hub or changing its C-side links, its new carriers must allow 64 Kb/s clear channel (B8ZS and ESF parameters in the tuple in table CARRMTC.

Basic call processing (continued)

The following table shows the datafill specific to Basic call processing for table LCMINV. Only those fields that apply directly to Basic call processing are shown. For a description of the other fields, refer to the data schema section of the *Translations Guide*.

Datafilling table LCMINV (Sheet 1 of 6)

Field	Subfield or refinement	Entry	Explanation and action
LCMNM		see subfields	LCM name. Enter the site name, frame number and peripheral module number assigned to the remote LCM.
	SITE	alphanumeric	Site. Enter the site name assigned to the remote location.
	FRAME	0 to 511	Frame number. Enter frame number for the SRHE.
	PMNO	0 to 255	Peripheral module number. Enter the peripheral module.
FRTYPE		HUB	Frame type. Enter the frame type where the PM equipment is mounted, for example, HUB. ***Note:*** Enter the location of the C-side PM in fields FRNO, SHPOS, FLOOR, ROW, and FRPOS.
EQPEC		NT8602	Equipment product engineering code. Enter the PEC of the PM.
LOAD		alphanumeric	Load name. Enter the name given to the issue of PM software.

Note 1: Changes to fields with multiple entries should be made in the PROMPT mode only. In nonprompt mode it is possible to leave out existing entries.

Note 2: Enter the continuation mark (+) in fields with multiple possible entries when more data is specified on the next line or more records will be entered. Enter the end mark ($) in fields with multiple possible entries after the last entry.

Note 3: When datafilling fields link information (LNKINFO) or link map (LNKMAP), make sure message links are not assigned to the same physical interface card. When the interface card supports two or more links, separate the message links by the number of links on the interface cards. This applies to all interface link types; DS-1, DS30, DS30A, or PCM-30. Table control will issue a warning if an attempt is made to assign message links on the same interface card. Assigning message links to the same interface card can cause an E1 outage (failure of all message links) if the card fails.

Basic call processing (continued)

Datafilling table LCMINV (Sheet 2 of 6)

Field	Subfield or refinement	Entry	Explanation and action
CSPMNO		see subfields	C-side peripheral module type and number. Enter the C-side PMTYPE and PM number.
	PMTYPE	LTC, LGC or RCC2	PMTYPE. Enter the C-side PM type.
	PMNO	0 to 255	Peripheral module number. Enter the number assigned to the C-side PM.
BICTST		Y or N	BIC relay test (BRT). Set to Y to include the Star Hub in the next LCM BRT schedule. Entry values are Y and N.
ADNUM		0 to 4095	Peripheral module administrative number. Enter the administrative number associated with the peripheral module (PM). ***Note 1:*** The value of field ADNUM must be unique across all PM inventory tables (DLMINV, IPEINV, LCMINV, LMINV, LTCINV, RCCINV, RCSINV, RCTINV, and VSRINV). Attempts to add a PM with an ADNUM already in use are rejected and the system prompts the user with the next available ADNUM value. ***Note 2:*** Field ADNUM cannot be changed if the operational measurements (OM) counts for that PM are included in an Engineering and Administrative Data Acquisition System (EADAS) or data collection (DC) section associated with the OM groups LMD or UTR.

Note 1: Changes to fields with multiple entries should be made in the PROMPT mode only. In nonprompt mode it is possible to leave out existing entries.

Note 2: Enter the continuation mark (+) in fields with multiple possible entries when more data is specified on the next line or more records will be entered. Enter the end mark ($) in fields with multiple possible entries after the last entry.

Note 3: When datafilling fields link information (LNKINFO) or link map (LNKMAP), make sure message links are not assigned to the same physical interface card. When the interface card supports two or more links, separate the message links by the number of links on the interface cards. This applies to all interface link types; DS-1, DS30, DS30A, or PCM-30. Table control will issue a warning if an attempt is made to assign message links on the same interface card. Assigning message links to the same interface card can cause an E1 outage (failure of all message links) if the card fails.

Basic call processing (continued)

Datafilling table LCMINV (Sheet 3 of 6)

Field	Subfield or refinement	Entry	Explanation and action
MEMSIZE		8M	Memory size. Enter the memory size of the processor card used in the LCM. Entry value is 8M.
LCMTYPE		see subfields	LCMTYPE info multiple with ringing data, ringing type and LCMINFO.
	STAR	alphanumeric	LCMTYPE selector. Enter LCM selector multiple with ringing data and ringing type.
RNGDATA		see subfield	Ring data. This field consists of subfield RGEQUIP.
	RGEQUIP	Y or N	Ringing generator equipped. Enter Y if a ringing generator is equipped and datafill refinement RNGTYPE. Enter Y to allow datafill of ring type.

Note 1: Changes to fields with multiple entries should be made in the PROMPT mode only. In nonprompt mode it is possible to leave out existing entries.

Note 2: Enter the continuation mark (+) in fields with multiple possible entries when more data is specified on the next line or more records will be entered. Enter the end mark ($) in fields with multiple possible entries after the last entry.

Note 3: When datafilling fields link information (LNKINFO) or link map (LNKMAP), make sure message links are not assigned to the same physical interface card. When the interface card supports two or more links, separate the message links by the number of links on the interface cards. This applies to all interface link types; DS-1, DS30, DS30A, or PCM-30. Table control will issue a warning if an attempt is made to assign message links on the same interface card. Assigning message links to the same interface card can cause an E1 outage (failure of all message links) if the card fails.

Basic call processing (continued)

Datafilling table LCMINV (Sheet 4 of 6)

Field	Subfield or refinement	Entry	Explanation and action
	RNGTYPE	F, S	Ring type. Enter the type of ringing assigned to the Star Hub as follows: • F (frequency) — enter the values for subfields RNGCADNCE and FREQUENCIES • S (superimposed) — enter the value for subfield PROMVOLT ***Note:*** If ring type tuples are being changed, first change field RNGTYPE to UNASSIGNED and then to the required ringing scheme. A table control check prevents changing tuples directly from one value to another without first changing field RNGTYPE to UNASSIGNED. A ringing scheme entered as initial datafill can be entered directly.
	RNGCADNCE	REA or BOC	Ringing cadence. Enter BOC (the ringing cadence for a Bell operating company) or enter REA (the ringing cadence for rural electrification administration). The default is REA.
	FREQUEN-CIES	see subfields	Frequencies. This subfield consists of a table of four refinements: A, B, C, and D.
	A	16, 17, 20, 25, 30, 34, 40, 42, 50, 54, 60, 66, 67, blank	Frequency A. Enter the frequency that is assigned to frequency A (primary frequency) or leave the field blank.

Note 1: Changes to fields with multiple entries should be made in the PROMPT mode only. In nonprompt mode it is possible to leave out existing entries.

Note 2: Enter the continuation mark (+) in fields with multiple possible entries when more data is specified on the next line or more records will be entered. Enter the end mark ($) in fields with multiple possible entries after the last entry.

Note 3: When datafilling fields link information (LNKINFO) or link map (LNKMAP), make sure message links are not assigned to the same physical interface card. When the interface card supports two or more links, separate the message links by the number of links on the interface cards. This applies to all interface link types; DS-1, DS30, DS30A, or PCM-30. Table control will issue a warning if an attempt is made to assign message links on the same interface card. Assigning message links to the same interface card can cause an E1 outage (failure of all message links) if the card fails.

Datafilling table LCMINV (Sheet 5 of 6)

Field	Subfield or refinement	Entry	Explanation and action
	B	16, 17, 20, 25, 30, 34, 40, 42, 50, 54, 60, 66, 67, blank	Frequency B. Enter the frequency that is assigned to frequency B or leave the field blank.
	C	16, 17, 20, 25, 30, 34, 40, 42, 50, 54, 60, 66, 67, blank	Frequency C. Enter the frequency that is assigned to frequency C or leave the field blank.
	D	16, 17, 20, 25, 30, 34, 40, 42, 50, 54, 60, 66, 67, blank	Frequency D. Enter the frequency that is assigned to frequency D or leave the field blank.
	PROMVOLT	40V or 48V	PROM offset voltage. Enter the PROM offset voltage required for the PROM in the ringing generator or leave the field blank.
LCMINFO		see subfields	Enter LCMINFO multiple with LCMSELECTOR, LINKMAP, INTRASW, ESA, CONVERTIBLE and DS1CARD.
	LCM SELECTOR	STAR	Enter STAR multiple with LINKMAP with LINKMAP, INTRASW, ESA. Enter DS1CARD since C-side interface link type is DS-1.
	LINKMAP	2 to 16	Enter C-side link numbers equipped; minimum of 2 links and a maximum of 16 links.

Note 1: Changes to fields with multiple entries should be made in the PROMPT mode only. In nonprompt mode it is possible to leave out existing entries.

Note 2: Enter the continuation mark (+) in fields with multiple possible entries when more data is specified on the next line or more records will be entered. Enter the end mark ($) in fields with multiple possible entries after the last entry.

Note 3: When datafilling fields link information (LNKINFO) or link map (LNKMAP), make sure message links are not assigned to the same physical interface card. When the interface card supports two or more links, separate the message links by the number of links on the interface cards. This applies to all interface link types; DS-1, DS30, DS30A, or PCM-30. Table control will issue a warning if an attempt is made to assign message links on the same interface card. Assigning message links to the same interface card can cause an E1 outage (failure of all message links) if the card fails.

Basic call processing (continued)

Datafilling table LCMINV (Sheet 6 of 6)

Field	Subfield or refinement	Entry	Explanation and action
	INTRASW	Y or N	Boolean Y or N to turn intraswitching ON or OFF
	ESA	Y or N	Boolean Y or N to turn emergency stand-alone ON or OFF
	MSG_PROTOCOL	HDLC or DMSX	Message protocol. Enter the protocol the DS-1 links to the host support. For the Star Hub, the protocol is HDLC.
LCMINFO(continued)	FULL_DRWR_CONF	Y or N	Full drawer configuration. Boolean Y or N if this Star Hub is configured in a • full frame configuration having four power converters and supporting up to 1152 lines • or half configuration having two power converters supporting up to 576 lines. The default value is Y, meaning a full configuration.

Note 1: Changes to fields with multiple entries should be made in the PROMPT mode only. In nonprompt mode it is possible to leave out existing entries.

Note 2: Enter the continuation mark (+) in fields with multiple possible entries when more data is specified on the next line or more records will be entered. Enter the end mark ($) in fields with multiple possible entries after the last entry.

Note 3: When datafilling fields link information (LNKINFO) or link map (LNKMAP), make sure message links are not assigned to the same physical interface card. When the interface card supports two or more links, separate the message links by the number of links on the interface cards. This applies to all interface link types; DS-1, DS30, DS30A, or PCM-30. Table control will issue a warning if an attempt is made to assign message links on the same interface card. Assigning message links to the same interface card can cause an E1 outage (failure of all message links) if the card fails.

Datafill example for table LCMINV

The following example shows sample datafill for table LCMINV.

MAP display example for table LCMINV

```
    LCMNM FRTYPE SHPOS FLOOR ROW FRPOS   EQPEC    LOAD      CSPMNO
BICTST ADNUM   MEMSIZE
                                                              LCMTYPE
_____________________________________________________________________
REM1  01 0    HUB    1    0    A    1     NT8602  HUB11DC   LTC   1
     N    25   8M    8M
    STAR   Y   C  ( 0) ( 2) ( 1) ( 3) ( 4) ( 5) ( 6) ( 7)$ Y Y HDLC Y
```

Datafilling table LCMDRINV

The line concentrating module line drawer inventory (LCMDRINV) table lists the data assignment for each line drawer in a Star Hub or a Star Module in a remote location. Only fields that require datafill related to the Star Hub and Star Module are shown.

Basic call processing (continued)

The data assignments are as follows:

- line concentrating module name (LCMNM) field includes:
  - — site—the physical location of the LCM
  - — frame—the frame number of the Star Hub
  - — unit—the unit number of the Star Hub (line drawer shelf number)
- drawer table field (DRWRTAB), a multiple of up to 18 of the following:
  - — physical drawer number (PHYDRNO)
    - – for a line drawer in the Star Hub, 0 to 17
    - – for the Star Module, 0 to 15
  - — product engineering code of the line drawer control card (LDCPEC)
    - – for a line drawer in the Star Hub, NT6X54AA or NT6X54DA
    - – for the Star Module, NTTR70AA
  - — product engineering code of the physical line drawer (DRWRPEC)
    - – for a line drawer in the Star Hub, NT6X05AA or NT6X05DA
    - – for the Star Module, NTTR40AA (outdoor version) or NTTR45AA (indoor version)
  - — remote line drawer internal number (RLDNO)
  - — drawer loadname has up to eight characters
  - — number of links (NUMLINKS) identifies the number of C-side DS-1 links that connect the Star Remote to the Star Hub
  - — CARRMTC tuple name of the DS-1 links between the Star Hub and Star Module (CARRIDX)
  - — ringer frequency (RINGER) for the Star Module
  - — module site name (RLDSITE) of the Star Module

For each line drawer defined in the switch through table LCMDRINV, the following information is stored:

- physical drawer number, which is the drawer number
- product engineering code (PEC) of the line drawer control card, which is the bus interface card (BIC) PEC (NT6X54AA) for POTS lines or the ISDN drawer controller (IDC) PEC (NT6X54DA) for ISDN lines
- PEC of the drawer, which is the POTS line drawer (NT6X05AA) or ILD-R PEC (NT6X05DA)
- drawer loadname, which is the loadfile name for the ILD-R drawer

Basic call processing (continued)

When you add or change remote line drawer (RLD) information in table LCMDRINV the system checks the following:

- The total number of RLDs defined in a DMS-100 switch cannot exceed 1000.
- RLDs connect only to Star Hubs.
- Up to 16 RLDs can connect to each Star Hub. The physical drawer number is a value from 0 to 15.
- The RLD PEC must be NTTR40AA or NTTR45AA.
- The software may change the RLD number to match the internal system requirements and notifies the user of the change.
- The system does not allow changes to the RLD number of an existing RLD.
- The RLD loadfile name must already be defined in table PMLOADS
- When you change the number of RLD C-side links from
  - — two to one, this is allowed when the removed link is offline
  - — two to one, the system updates the state of the removed link to Uneq
  - — one to two, the system updates the state of the added link to Offl
- When you change the RLD carrier index, the system tries to send a maintenance request for dynamic update of static data for any LCM unit that is in service.
- You can remove an RLD from table LCMDRINV when the state is Offl.
- You can remove an RLD from table LCMDRINV when it does not have lines or special connections or LMU defined on it
- The RLD line drawer control card PEC (NTTR70AA) can be changed only to NILDRWR or NILDRWR to NTTR70AA, not to another line drawer code PEC
- The RLD drawer PEC can be changed (NTTR40AA to NTTR45AA) only when the RLD is ManB or OffL.
- Up to 90 ISDN drawers (RLD or ILD) can connect to one C-side PM (LTC, LGC, or RCC2)
- The ringer frequency for the RLD can be changed only when the RLD is ManB or OffL.

The following table shows the datafill specific to Basic call processing for table LCMDRINV. Only those fields that apply directly to Basic call processing are shown.

Basic call processing (continued)

For a description of the other fields, refer to the data schema section of the *Translations Guide*.

Datafilling table LCMDRINV (Sheet 1 of 3)

Field	Subfield or refinement	Entry	Explanation and action
LCMNM		see subfield	Line concentrating module name. This is the key field and consists of subfield LINE_MOD.
	LINE_MOD	see subfield	Line module key. This subfield consists of subfields SITE and FRAME, and subfield unit.
	SITE	alphabetic (up to four characters) or blank	Site. If the office parameter USINGSITE in table OFCOPT and the office parameter UNIQUE_BY_SITE_NUMBERING in table OFCENG are both equal to Y (yes). When the line is remote from the host, enter the site name assigned to the remote location. Otherwise, if the line is located at the host, leave the subfield blank. SITE is datafilled by default with HOST. If the office parameter USINGSITE in table OFCOPT is equal to Y and the office parameter UNIQUE_BY_SITE_NUMBERING in table OFCENG is equal to N (no), numbering is unique to office, The entry in subfield SITE is optional. If SITE is entered, it is checked for a match in one of the tables where lines are assigned. If SITE is not entered, it is not datafilled by default and is not checked against one of the tables where lines are assigned. If office parameter USINGSITE in table OFCOPT is set to N, leave this subfield blank.
	FRAME	0 to 511	Line module frame number. Enter the number of the frame where the line card is assigned. The frame type is datafilled in field FRTYPE as STAR.
	UNIT	0 to 2	Line module unit number. Enter the unit number which is 0 for the HUB.

Basic call processing (continued)

Datafilling table LCMDRINV (Sheet 2 of 3)

Field	Subfield or refinement	Entry	Explanation and action
DRWRTAB		see subfield	Drawer table. This is a multiple of up to twelve entries in subfields PHYDRNO, DRWRPEC, LDCPEC, and LOADNAME.
	PHYDRNO	0 to 17 for BIC/ILD 0 to 15 for RLD	The physical drawer number. Physical drawer 0 consist of logical drawers 0 and 1.
	LDCPEC	NT6X54AA, NT6X54DA, or NTTR70AA	The line drawer control card PEC. Enter the correct line drawer control card PEC as follows: • for a line drawer in the Star Hub, NT6X54AA or NT6X54DA • for the Star Remote, NTTR70AA
	DRWRPEC	NT6X05AA, NT6X05DA, NTTR40AA, or NTTR45AA	The physical line drawer PEC. Enter the correct line drawer PEC as follows: • for line drawer in the Star Hub, NT6X05AA or NT6X05DA • for the Star Remote — NTTR40AA - indoor version of the Module — NTTR45AA - outdoor version of the Module
	RLDNO	0-999	Remote line drawer internal number. ***Note:*** When a new remote line drawer (RLD) is defined, the value of RLDNO may be changed by table control according to the actual size of the RLD internal databases.
	LOADNAME	alphanumeric (vector of up to eight characters)	Load. Enter the name given to the peripheral module (PM) software load for the ILD or RLD.
	NUMLINKS	1 or 2	Number of DS-1 links. Enter the number of DS-1 links that connect the Star Module to the Star Hub.

Basic call processing (continued)

Datafilling table LCMDRINV (Sheet 3 of 3)

Field	Subfield or refinement	Entry	Explanation and action
	CARRIDX	0 to 15	Carrier index. Tuple name of the Ds-1 links between the Star Hub and the Star Module in table CARRMTC.
	RINGER	20, 25, or 30	Ringer frequency. Enter the value of the Star Module's coded ringer. The following ringing frequencies apply fo specific applications • coded ringing (Bell Canada) - 20 Hz • coded ringing (International) - 25 Hz • coded ringing (North America) - 30 Hz
	RLDSITE	alphanumeric (vector of up to eight characters)	Remote line drawer location site name. Enter a string of up to eight characters describing the Star Module location.

Datafill example

The following example shows sample datafill for table LCMDRINV when datafilled for the Star Hub.

MAP display example for table LCMDRINV

```
TABLE LCMDRINV

LCMNM  DRWRTAB
_____________________________________________________________________
REM1 01 0
(0 NT6X54AA NT6X05AA) (1 NT6X54DA NT6X05DA ILDRAB07)
(2 NT6X54AA NT6X05AA) (3 NT6X54AA NT6X05AA) (4 NILDRWR)
(5 NT6X54AA NT6X05AA) (6 NT6X54AA NT6X05AA)
(7 NT6X54AA NT6X05AA) (8 NTTR70AA NTTR40AA 14 RDAA09A 2
DS1HUB 20 LAKE9) (9 NT6X54AA NT6X05AA) (10 NT6X54AA
NT6X05AA) (11 NT6X54AA NT6X05AA) (12 NT6X54AA NT6X05AA)
(13 NT6X54AA NT6X05AA) (14 NT6X54AA NT6X05AA) (15 NT6X54AA
NT6X05AA) (16 NT6X54AA NT6X05AA) (17 NT6X54AA NT6X05AA)$
```

Datafilling table RMPCKT

Table remote maintenance pack circuit (RMPCKT). An entry is required in table RMPCKT to support

- the universal maintenance pack (UMP) card for the Star Hub. The UMP card provides line diagnostic and maintenance capabilities for the Star Hub. To support the first UMP card, datafill the following tables in the order listed
  - — table CLLI, for the first UMP card
  - — table PMLOADS, for the UMP load file
  - — table LNINV, declare at least one line on the Star Hub
  - — table RMPCKT, for the details of each UMP card
  - — tables ALMSCGRP and ALMSDGRP, for the scan (SC) and signal distribution (SD) groups
  - — tables ALMSC and ALMSD, for the SC and SD points
- the line maintenance unit (LMU) card in the Star Module. The LMU card is used for line testing and diagnostics. There is one LMU in each Star Module. The LMU is connected in parallel by a metallic bus to all of 64 lines connected to the Star Module. To support the first LMU card, datafill the following tables in the order listed
  - — table CLLI, for the first LMU card
  - — table LNINV, declare at least one line on the Star Module
  - — table RMPCKT, for the details of each LMU card
  - — tables ALMSCGRP and ALMSDGRP, for the scan (SC) and signal distribution (SD) groups
  - — tables ALMSC and ALMSD, for the SC and SD points

The following table shows the datafill specific to Basic call processing for table RMPCKT. Only those fields that apply directly to Basic call processing are shown.

Basic call processing (continued)

For a description of the other fields, refer to the data schema section of the *Translations Guide*.

Datafilling table RMPCKT (Sheet 1 of 2)

Field	Subfield or refinement	Entry	Explanation and action
MPKEY		See subfields	Maintenance pack key. Enter the maintenance pack CLLI and maintenance pack index.
	MPCLLI	RMP, UMP, LMU	Maintenance pack CLLI. Enter the type of maintenance card in the Star Hub or Star Module.
	MPIND	0 to 511	Maintenance pack index. Enter the index number in a range of 0 to 511.
PM_NAME			Peripheral module name. This field consists of four subfields
	REMOTYP		Remote type. Enter the remote PM type.
	SITE	alphanumeric	Site. Enter the site name assigned to the remote location.
	FRAME	0 to 511	Frame number. Enter frame number for the Star Hub.
	UNIT	0 to 2	Unit number. Enter the unit number where the maintenance pack resides.
SLOT_or_DRAWER			Slot or drawer. This field consists of subfields slot and drawer. Enter SLOT for a UMP. Enter DRAWER for an LMU.
	SLOT	0-37	UMP slot number. Enter the slot number of the UMP card.
	DRAWER	0-17	Drawer number. Enter the drawer number in the Star Hub that represents the RLD the LMU is in.
CARDCOD		NTTR71 NTTR73	Card code. Enter the card code for the LMU or UMP.
LOAD		TERM_LDINFO	Load file name. Enter the name of the UMP load as defined in table PMLOADS.
TRAFSNO		0 to 127	Traffic separation. Enter the type of traffic separation or traffic analysis to be performed.

Datafilling table RMPCKT (Sheet 2 of 2)

Field	Subfield or refinement	Entry	Explanation and action
T_LINEATTR		0 to 31999	Table LINEATTR index. Enter the line attribute index number in table LINEATTR for each UMP. Range is 0 to 31999. ***Note:*** In the North American market, the default entry for T_LINEATTR is 0 NIL NIL.
	XLAPLAN	XLAPLAN_KEY	Translations plan. Default value is NIL.
	RATEAREA	NLCA_NILLA_0, NIL	Rate area. Default value is NIL.

Datafill example for table RMPCKT

The following example shows sample datafill for table RMPCKT.

MAP display example for table RMPCKT

```
      RMPCKT
MPKEY       PMNAME   SLOT_OR_DRAWER  CARDCOD LOAD TRAFSNO
T_LINEATTR
_____________________________________________________________
UMP 0   STAR REM1 9 0  SLOT 11      NTTR73  DUMPAK01  3
     1 NIL NIL
UMP 1   STAR REM1 0 1  SLOT 13      NTTR73  DUMPAK01  4
     2 NIL NIL
LMU 7   STAR REM1 4 0  DRAWER 8 TR71AA      NILFNAME  0
     0 NIL NIL
```

Datafilling table ISGDEF

The ISDN service group definition (ISGDEF) table contains information on the following:

- ISG numbers
- the PM type
- the services provided
- the allocation of services channels

Basic call processing (continued)

The datafill for Basic call processing for table ISGDEF appears in the following table. Only the fields that apply directly to Basic call processing appear.

Datafilling table ISGDEF (Sheet 1 of 2)

Field	Subfield or refinement	Entry	Explanation and action
ISGNO		0-255	ISDN service group number. Enter the identification number used to assign the D-channel to a DCH.
PMTYPE		STAR	Peripheral module type. Enter the PM that supports D-channel services.
PMNO		0-255	Peripheral module number. Enter the PM number of the Star Hub.
SERVICE		BRA or PD	Enter the services that the ISDN service group provides. A maximum of three entries are allowed. Use a $ sign to terminate this field if you make fewer than three entries.

Datafilling table ISGDEF (Sheet 2 of 2)

Field	Subfield or refinement	Entry	Explanation and action
CHNLTAB		Refer to subfields	Channel information. This field is a vector with a maximum of 32 entries. The field specifies the functions of each channel. This field contains subfields DCHNL and CHNLTYPE. Use a dollar sign ($) sign to terminate this field if you make less than 32 entries. ***Note:*** All BD channels must be assigned in descending order. This order must start at 31. The BRA channels are assigned in ascending order. This order must start at 0. The following limits apply to the order of datafill for BD and basic rate access (BRA) channels: The system generates the warning message `BD channels must be higher than any BRA channels` for one night process (ONP). This message notifies operating company personnel of the incorrect data order in the tuple transferred. The table on the new side accepts the tuple. For non-ONP, the system generates the error message `BD channels must be higher than any BRA channels`. This message informs operating company personnel of the incorrect data order in the tuple. The system rejects the tuple.
	DCHNL	0-31	D-channel. Enter the external identifier for the D-channel.
	CHTYPE	Refer to subfield	Channel type. This field contains subfield CHNLTYPE and refinements.
	CHNL-TYPE	NIL, RESERVED, BRA or BD	Channel type. Enter the service the D-channel provides.

Datafill example for table ISGDEF

Sample datafill for table ISGDEF appears in the following example.

Basic call processing (continued)

MAP example for table ISGDEF

```
ISGNO  PMYTPE  PMNO  SERVICE
                                                    CHNLTAB
_____________________________________________________________
3       STAR    5     BRA$
  (0 RESERVED ) (1 BRA) (2 BRA) (3 BRA) (4 BRA) (5 BRA)
(6 BRA) (7 BRA) (8 BRA) (9 BRA) (10 BRA) (11 BRA)
(12 BRA) (13 BRA) (14 BRA) (15 BRA) (16 BRA) (17 BRA)
(18 BRA) (19 BRA) (20 BRA) (21 BRA) (22 BRA) (23 BRA)
(24 BRA) (25 BRA) (26 BRA) (27 BRA) (28 BRA) (29 BRA)
(30 BD) (31 BD) $
```

Datafilling table LTGRP

Table logical terminal group (LTGRP) defines a maximum of 32 logical terminal groups. The table permanently defines one group as ISDN. You cannot delete this group.

Alpha-numeric combinations of eight characters can define additional group names. Each group supports a maximum of 1022 logical terminal identifiers. The groups support a table total of a maximum of 32,704 logical terminal identifiers (32 x 1022).

Note: You must enter a logical terminal group in this table before you can specify logical terminals in other tables.

The datafill for Basic call processing for table LTGRP appears in the following table. Only the fields that apply directly to Basic call processing appear.

Datafilling table LTGRP (Sheet 1 of 2)

Field	Subfield or refinement	Entry	Explanation and action
GROUP		alphanumeric	Logical terminal group. Enter the name of the logical group of terminals.

Datafilling table LTGRP (Sheet 2 of 2)

Field	Subfield or refinement	Entry	Explanation and action
GROUPNO		0-31	Group number. Enter a number associated with the group name. The default number for logical terminal group ISDN is 0. For data packet network terminal groups, enter a number between 1-15.
OPTIONS		SAPI16 or $	Options. Enter SAPI16 for packet or circuit switched terminals. If the table does not specify the SAPI16 option, you cannot enter packet-switched terminals for the group.

Datafill example for table LTGRP

Sample datafill for table LTGRP appears in the following example.

MAP example for table LTGRP

```
GROUP  GROUPNO                              OPTIONS
------------------------------------------------------------
ISDN       0                                (SAPI16)
STAR       1                                (SAPI16)
```

Datafilling table LTDEF

Table logical terminal definition (LTDEF) defines logical terminals and terminal access privileges. The following access privileges can be assigned to a logical terminal:

- voice and circuit-switched data on a B-channel (B)
- low-speed packet-switched data on a D-channel (D)
- high-speed packet data on a B-channel (PB)
- combined circuit-switched and D-channel packet data (BD)
- 2-B circuit switching (2B)

Basic call processing (continued)

The datafill for Basic call processing for table LTDEF appears in the following table. Only the fields that apply directly to Basic call processing appear.

Datafilling table LTDEF (Sheet 1 of 3)

Field	Subfield or refinement	Entry	Explanation and action
LTKEY		Refer to subfields	Logical terminal key.
	LTGRP	alphanumeric	Logical terminal group. Enter the logical terminal group. The field defines group ISDN.
	LTNUM	0-1022	Logical terminal number. Enter a logical terminal number.
LTAP		B, D, BD, PB, 2B	Logical terminal access privilege. Enter one of the following access privileges: • B for circuit-switching • D for D-channel packet-switching • BD for combined circuit-switching and D-channel packet-switching • PB for B-channel packet switching • 2B for 2B circuit switching ***Note:*** BD is for functional sets. The B is for ISDN Meridian feature transparency (MFT).
CLASSREF		BRAFS, or BRAMFT	Logical terminal class of service. Enter a set of services allowed for the logical terminal. Range is BRAFS for BRA functional sets, and BRAMFT for functional terminals.

Datafilling table LTDEF (Sheet 2 of 3)

Field	Subfield or refinement	Entry	Explanation and action
	OPTION	Refer to list of options	This field contains a list of assigned options. The value specified for the field LTCLASS determines the options assigned. The following BRAFS options are available: • SPIDSFX • CDEFLTER • MACH • NOVOICE • NOVBD • NOCMD • NOPMD • DTEI • SPIDSPX • EKTS • PVC • UATEI • UNATEI The following BRAMFT options are available: • DTEI • SPIDSFX • UATEI • PVC
		CACH	Call appearance handling feature. Enter CACH to enable CACH. Enter EKTS if you enter the CACH option.
		EKTS	Electronic key telephone service. Enter EKTS to indicate electronic key telephone service.
		NOCMD	No circuit mode data calls. Enter NOCMD if circuit mode data calls are not allowed.

Basic call processing (continued)

Datafilling table LTDEF (Sheet 3 of 3)

Field	Subfield or refinement	Entry	Explanation and action
		DEFLTERM	Default logical terminal. A phone can have a default service profile. This phone does not require a download of the service profile. If this condition occurs, enter DEFLTERM. A terminal that does not initialize can require this entry.
		NOPMD	No packet mode data calls. Enter NOPMD if packet mode data calls are not allowed.
		NOVBD	No voice band data calls. Enter NOVBD if voice band data calls are disallowed.
		NOVOICE	No voice calls. Enter NOVOICE if voice calls are not allowed.
	SPIDSFX	Refer to subfield	Service profile identifier suffix. This field contains subfield SPID_SUFFIX.
	SPID-SUFFIX	numeric	Service profile identifier suffix. Enter a name that identifies the subscriber on a dynamic terminal endpoint identifier (TEI) terminal.
		DTEI	Dynamic terminal endpoint identifier. Enter DTEI. An entry in this field is required if you enter subfield SPIDSFX.
	PVC	Refer to subfields	Protocol version control. This field contains subfields VERSION and ISSUE.
	VERSION	FUNCTIONAL	Protocol version. Enter the protocol version.
	ISSUE	0 or 1	Protocol issue. Enter the protocol issue for the specified logical terminal. Enter 0 for stimulus and MFT protocols, or 1 for BellCore functional protocol.
		UATEI	User-assigned terminal endpoint identifier. Enter the user-assigned terminal endpoint identifier, if the field requires the identifier.

Datafill example for table LTDEF

Sample datafill for table LTDEF appears in the following example.

MAP example for table LTDEF

```
LYKEY    LTAP                                  CLASSREF
_____________________________________________________________
STAR       B
BRAFS    (NOPMD)   (PVC FUNCTIONAL 0)    $
STAR       B2
BRAFS (NOPMD) (PVC FUNCTIONAL 2) (DTEI ) (SPIDSFX 1)
(EKTS) $
```

Datafilling table REXSCHED

Table routine exercise schedule (REXSCHED) contains the SREX test scheduling information required by the REX controller.

The following table shows the datafill specific to HUB REX testing. Only those fields that apply directly to HUB REX are shown.

For a description of the other fields, refer to the data schema section of the *Translations Guide*.

Datafilling table REXSCHED (Sheet 1 of 2)

Field	Subfield or refinement	Entry	Explanation and action
REXTSTID		see subfield	REX tests identification. Contains subfield REX_TEST_ID
	REX_TEST_ID	see list	REX test ID. REX test identifiers are defined automatically by the system when inventory tables are datafilled. Examples: MS_REX_TEST, CM_REX_TEST, SLM_REX_TEST, LGC_REX_TEXT, MSB_REX_TEST, LCM_REX_TEST, and LCMCOV_REX_TEST.
ENABLE		Y or N	Enable REX test. Enable test schedule for specific REX identifier. Default: Y

Note 1: The LCMCOV_REX_TEST is performed only on LCMs, XLCMs, OPMs, and RLCMs.

Note 2: Changes to fields with multiple entries should be made in the PROMPT mode only. In nonprompt mode it is possible to leave out existing entries.

Note 3: Enter the continuation mark (+) in fields with multiple possible entries when more data is specified on the next line or more records will be entered. Enter the end mark ($) in fields with multiple possible entries after the last entry.

Basic call processing (continued)

Datafilling table REXSCHED (Sheet 2 of 2)

Field	Subfield or refinement	Entry	Explanation and action
PERIOD		1 to 7 inclusive	Minimum number of days between consecutive REX schedules. Each REX test must be run at least once a week. Default: 1 (run REX every day).
PARALLEL		1 to 99	Number of specific REX tests running parallel. Limit of concurrent REX tests running for a node type. For LCM_REX, the maximum concurrent tests that can be run is 4. For LCMCOV_REX tests, the availability of only one line test unit (LTU) in an LCM requires a maiximum of 1. Default: 1.
DAYSDSBL		see list	Days to disable REX testing. A list of days when REX testing will be disabled. values: MON, TUE, WED, THU, FRI, SAT, SUN, ALL or NONE. Each REX test must run at least once a week. The ALL option is included to suspend a REX test to facilitate system maintenance. Default: none.

Note 1: The LCMCOV_REX_TEST is performed only on LCMs, XLCMs, OPMs, and RLCMs.

Note 2: Changes to fields with multiple entries should be made in the PROMPT mode only. In nonprompt mode it is possible to leave out existing entries.

Note 3: Enter the continuation mark (+) in fields with multiple possible entries when more data is specified on the next line or more records will be entered. Enter the end mark ($) in fields with multiple possible entries after the last entry.

Datafill example for table REXSCHED

The following example shows sample datafill for table REXSCHED.

MAP display example for table REXSCHED

```
Table: REXSCHED

      REXTSTID    ENABLE   PERIOD   PARALLEL      DAYSDSBL

    MS_REX_TEST         Y        1          1          NONE
    CM_REX_TEST         Y        1          1          NONE
   SLM_REX_TEST         Y        1          1          NONE
   LGC_REX_TEST         Y        1          1          NONE
   MSB_REX_TEST         Y        1          1          NONE
   LCM_REX_TEST         Y        1          4          NONE
   LCMCOV_REX_TEST      Y        1          1          NONE
```

Datafilling table LCASCRCN.LCASCR

Subtable local calling area screening (LCASCA) maps numbering plan areas (NPA) geographically against trunk groups in the DMS-100 switch for billing purposes. Subtable LCASCR is one of two subtables controlled by the local calling area screening control table (LCASCRCN).

Control table LCASCRCN assigns selected local calling area names to serving trunk group area codes. Each trunk group area code, along with its assigned name, represents a key in subtable LCASCR. This subtable is accessed from within table LCASCRCN using the command SUB LCASCR.

Each key in subtable LCASCR is then assigned ranges of local area codes, or NPA, assigned to that trunk group. Any NPA served by the RLCM should likewise be assigned to such a trunk group, defined in table LCASCRCN. These assignments are made in subtable LCASCRCN.LCASCR.

The following table shows the datafill specific to Basic call processing for table LCASCR. Table LCASCR is a subtable of table LCASCRCN, and must be accessed through table LCASCRCN. Only those fields that apply directly to Basic call processing are shown.

Basic call processing (continued)

For a description of the other fields, refer to the data schema section of the *Translations Guide*.

Datafilling table LCASCR

Field	Subfield or refinement	Entry	Explanation and action
FROMDIGS		000 to 999	From digits. Enter the three-digit prefix (NNX) code. This number represents a single code, or the first in a block of consecutive local NNX codes.
TODIGS		000 to 999	To digits. If field FROMDIGS represents the first of a block of consecutive local NNX codes, enter the last NNX code in the block. If field FROMDIGS represents a single local NNX code, enter the NNX code entered in FROMDIGS.

Datafill example for table LCASCRCN.LCASCR

The following example shows sample datafill for table LCASCRCN.LCASCR.

MAP display example for table LCASCRCN.LCASCR

```
POS 904 FLA1; SUB LCASCR;POS 305;LIST 3

 FROMDIGS      TODIGS
-------------------------------------------------------------
    305          305
    813          813
    912          912
```

Datafilling table TRKGRP

Table trunk group (TRKGRP) defines data for each trunk group associated with the switching unit. Each trunk group entry in table TRKGRP consists of a unique CLLI for the trunk group and several fields determined by the trunk group type (field GRPTYP).

The following table shows the datafill specific to Basic call processing for table TRKGRP. Only those fields that apply directly to Basic call processing are shown.

For a description of the other fields, refer to the data schema section of the *Translations Guide*.

Datafilling table TRKGRP

Field	Subfield or refinement	Entry	Explanation and action
GRPKEY		see subfields	Group key. This field is comprised of the subfield CLLI. Enter the CLLI code for the trunk group assigned in table CLLI.
	CLLI	alphanumeric	Group key. This field is comprised of the subfield CLLI. Enter the CLLI code for the trunk group assigned in table CLLI.
GRPINFO		GRPTYP, TRAFSNO, PADGRP, NCCLS, and CARD	Variable group data. When trunk group type is MAINT, this field is comprised of subfields GRPTYP, TRAFSNO, PADGRP, NCCLS, and CARD.
	GRPTYP	ITL2, TTL2, LOOPA, MAINT, or SOCKT	Group type. Enter the group type for the trunk group. For maintenance and test trunks, the range is ITL2, TTL2, LOOPA, MAINT, or SOCKT.
	TRAFSNO	0 to 127	Traffic separation number. This is not required for maintenance and test trunks.
	PADGRP	alphanumeric	Pad group. Enter the name of the pad group assigned to the trunk group in table PADDATA. For maintenance and test trunks, enter IAO (intra-office trunks). Otherwise, enter NPDGP.
	NCCLS	NCRT	No circuit class. Enter NCRT (no circuit).
	CARD	alphanumeric	Card code. Enter the product engineering code of the maintenance and test trunk.

Note 1: The total number of trunk groups, where memory is allocated in table TRKGRP, is equal to the value of field SIZE in table DATASIZE for key TRKGRP.

Note 2: Each trunk group in table TRKGRP is to be assigned one or two subgroups defined in table TRKSGRP.

Note 3: The physical location of all analog or digital trunks assigned to the trunk groups in table TRKGRP are listed in table TRKMEM.

Basic call processing (continued)

Datafill example for table TRKGRP

The following example shows sample datafill for table TRKGRP.

MAP display example for table TRKGRP

```
      GRPKEY                                  GRPINFO
_____________________________________________________________
        VER90                MAINT  0  NPDGP NCRT  2X90AB
        TTT                  MAINT  0  IAO   NCRT  2X96AA
        TTU                  MAINT  0  IAO   NCRT  2X47AA
        LTU                  MAINT  0  IAO   NCRT  2X11AA
   RLCMVER90                   VR   0  TLD   NCRT      VR
        OG_1             TO  0  TLD NCRT     IE MIDL  7 N
        OG_2             TO  0  TLD NCRT     IE MIDL  4 N
        OG_3             TO  0  TLD NCRT     IE MIDL  4 N
        OG_4             TO  0  TLD NCRT     IE MIDL  4 N
        OG_5             TO  0  TLD NCRT     IE MIDL  4 N
        OG_6             TO  0  TLD NCRT     IE MIDL  4 N
        TDSK             TD  0  ELO NCRT TK MIDL NPRT NSCR
                                      613 LCL N N BASIC Y
```

Datafilling table TRKSGRP

Table TRKSGRP (trunk subgroup) lists supplementary information for each subgroup assigned to trunk groups listed in table TRKGRP. Input data must be specified for at least one, or a maximum of two subgroups, for each trunk group listed in table TRKGRP, excluding trunk groups defined in TRKGRP as a maintenance group type (MAINT).

No data is required in the trunk subgroup table for the MAINT trunk group type.

> ***Note:*** The total number of trunk groups where memory is allocated in table TRKSGRP is equal to the value of field SIZE in table DATASIZE for key TRKSGRP.

The following table shows the datafill specific to Basic call processing for table TRKSGRP. Only those fields that apply directly to Basic call processing are shown.

For a description of the other fields, refer to the data schema section of the *Translations Guide*.

Datafilling table TRKSGRP (Sheet 1 of 2)

Field	Subfield or refinement	Entry	Explanation and action
SGRPKEY		see subfields	Subgroup key. This field contains subfields CLLI and SGRP.
	CLLI	alphanumeric	Common language location identifier. This subfield contains the code assigned in the CLLI table to the trunk group where the subgroup belongs.
	SGRP	0 or 1	Subgroup number. This subfield contains the number assigned to the trunk subgroup.
CARDCODE		alphanumeric	Card code. This field lists the maintenance and test trunk PEC, which in the Star Hub is the NTTR73AA.
SGRPVAR		STD, DSOTL, STDTL, C7UP, ISDN, FST, X75	Subgroup variable signalling data selector. Defines type of signalling data for trunk subgroup.
SGRPVAR	DIR	IC, OG, 2W	Variable subgroup data. Consists of subfield direction (DIR). Refinements are defined for directions of incoming (IC) outgoing (OG) or two way (2W) trunk traffic.
		OG	For outgoing trunks, datafill the following refinements.
	OPULSTYP	DP, DT, MF, or blank	Outgoing type of pulsing. For maintenance and test trunks, the entry is no pulsing (NP).
	OSTARTSG	DD, IM, LS, GS, or WK	Outgoing start dial signal. For maintenance and test trunks, the entry is wink (WK).
	IDGTIME	0 to 100 or blank	Interdigital timing. For maintenance and test trunks, this value is 2.

Note 1: Memory is allocated for the number of trunk subgroups by the SIZE field in table DATASIZE for the entry with field DATSKEY equal to TRKSGRP.

Note 2: The maximum number of trunk subgroups is equal to twice the number of trunk groups.

Note 3: The maximum number of trunk subgroups that can be assigned is 4096.

Basic call processing (continued)

Datafilling table TRKSGRP (Sheet 2 of 2)

Field	Subfield or refinement	Entry	Explanation and action
	NUMSTOPS	0 to 3, or blank	Number of stop/goes. For maintenance and test trunks, this value is 0.
	CCONT	MW or NO	Coin control. For maintenance and test trunks, the entry is MW (multiwink).
	RNGBCK	IB or N	Ringback. For maintenance and test trunks, the entry is inband (IB).
	ESUPR	F, H, or N	Echo suppressor. For maintenance and test trunks, the entry is no echo suppressor, N.
	SAT	Y or N	Satellite. For maintenance and test trunks, the entry is no satellite, N.
	REMBSY	Y or N	Remote make busy. For maintenance and test trunks, the entry is feature not assigned, N.
	TRKGDTIM	16	Trunk guard timing. For maintenance and test trunks, this value is 16 (160 ms elapse time interval before the trunk is returned to the idle link list after trunk disconnect).

Note 1: Memory is allocated for the number of trunk subgroups by the SIZE field in table DATASIZE for the entry with field DATSKEY equal to TRKSGRP.

Note 2: The maximum number of trunk subgroups is equal to twice the number of trunk groups.

Note 3: The maximum number of trunk subgroups that can be assigned is 4096.

Datafill example for table TRKSGRP

The following example shows sample datafill for table TRKSGRP.

MAP display example for table TRKSGRP

```
            SGRPKEY   CARDCODE
SGRPVAR

SGRPVAR
-------------------------------------------------------------
----------
            VER90      TR73AA
   STD                 OG    NP       WK  0 0   NO    N F
N N 17
            TDSK       2X90AD
  STD                  IC    MF       WK N 10 10 NO NO N N
N M UNEQ $
```

Datafilling table TRKMEM

Table TRKMEM (trunk member) lists data associated with each analog or digital trunk assigned to one of the trunk groups and subgroups in tables TRKGRP and TRKSGRP.

The following table shows datafill specific to Basic call processing for table TRKMEM. Only those fields that apply directly to Basic call processing are shown.

For a description of the other fields, refer to the data schema section of the *Translations Guide*.

Datafilling table TRKMEM (Sheet 1 of 2)

Field	Subfield or refinement	Entry	Explanation and action
CLLI		alphanumeric	Common language location identifier. Enter the code assigned in table CLLI to the trunk group where the trunk is a member.
EXTRKNM		0 to 9999	External trunk number. Enter the external trunk number assigned to the trunk.
Note 1: Memory is allocated for the total number of trunks specified in field TRKGRSIZ in table CLLI for the appropriate trunk groups. ***Note 2:*** Table size may be increased with data present by changing field TRKGRSIZ in table CLLI for the appropriate trunk groups.			

Basic call processing (continued)

Datafilling table TRKMEM (Sheet 2 of 2)

Field	Subfield or refinement	Entry	Explanation and action
SGRP		0 to 1	Subgroup number. Enter the subgroup number where the trunk is assigned. Enter 0 for maintenance and test trunks, 1 for others.
MEMVAR		see subfields	Variable data for members. For RSC applications, this field varies according to whether the trunk is part of an interoffice trunk or a maintenance trunk. For an interoffice trunk, the subfields are PMTYPE, RCCNO, RCCCKTNO, and RCCCKTS.
	PMTYPE	RMM	Peripheral module type. Enter the PM type where the trunk is mounted.
	RMMNO	0 to 2047	RMM number. Enter the number assigned to this remote maintenance module.
	TMCKTNO	0 to 29	RMM circuit number. Enter the RMM circuit number where the TRKGRP member is assigned.

Note 1: Memory is allocated for the total number of trunks specified in field TRKGRSIZ in table CLLI for the appropriate trunk groups.

Note 2: Table size may be increased with data present by changing field TRKGRSIZ in table CLLI for the appropriate trunk groups.

Datafill example for table TRKMEM

The following example shows sample datafill for table TRKMEM.

MAP display example for table TRKMEM

```
TABLE:  TRKMEM
     CLLI                EXTRKNM SGRP                MEMVAR
-------------------------------------------------------------
     RSMVER90              0     0              RMM  2  4
     RSMVER90              1     0              MTM  2  2
     MONTALK 3             2     0              RMM  2  6
     LTU 3                 3     0              RMM  2  3
     LTU 5                 4     0              RMM  2  5
     MONTALK 5             5     0              RMM  2  8
     ESADGTR 0             6     0              RMM  2  10
     ESADGTR 1             7     0              RMM  2  11
     TDSK                  0     0              MTM  0  16
```

Datafilling table RECEIVER

Table RECEIVER contains the following information for each audio tone detector, DIGITONE, multifrequency receiver, and mechanized calling card service:

- the code assigned to the equipment in table CLLI
- analog equipment for COMMON or GATEWAY switching
- digital switching equipment
- the equipment location of the circuit
- the product engineering code (PEC) of the receiver

The datafill for Basic call processing for table RECEIVER appears in the following table. Only the fields that apply directly to Basic call processing appear.

Datafilling table RECEIVER (Sheet 1 of 2)

Field	Subfield or refinement	Entry	Explanation and action
RCVRKEY		see subfields	Receiver key. This field contains subfields CLLI and NUM. This field is the key to the table.
	CLLI	RCVRMF	Common language location identifier. This field indicates the common language location identifier (CLLI) for the circuit type. Enter RCVRMF for a multifrequency receiver circuit.
	NUM	0 to 1023	Circuit number. Enter the number assigned to the circuit. Entries out of the 0 to 1023 range are not correct.
RCVRTYPE		A or D	Receiver type. Enter the type of circuit, analog (A) for COMMON and GATEWAY, or digital (D) for switching units.
TMTYPE		MTM, T8A, TM2, TM4 or TM8	Trunk module type. Enter the type of trunk module where the circuit mounts. Only the entries that appear are correct.

Basic call processing (continued)

Datafilling table RECEIVER (Sheet 2 of 2)

Field	Subfield or refinement	Entry	Explanation and action
TMNO		0 to 2047	Trunk module number. Enter the number of the trunk module where the circuit mounts. If the trunk module type is TM2, TM4, TM8, or T8A, the range is 0 to 2047. If the trunk module type is MTM, the range is 0 to 255.
TMCKTNO		0 to 29	Trunk module circuit number. Enter the trunk module circuit number assigned to the circuit. For an analog receiver, the range is even numbers 0 to 28 only. For a digital receiver mounted on trunk module type TM2, TM4, TM8 or T8A, the range is 0 to 29. For a digital receiver or audio tone detector mounted on an MTM, the range is 0 to 24.
CARDCODE		2X48AA 2X48AB 2X48CA 2X48CB 2X48CC 3X08AA 3X08AB 5X29AB 5X29AC or 5X29BA	Card code. Enter the PEC of the receiver card. Only the entries are correct.

Datafill example for table RECEIVER

Sample datafill for table Basic call processing appears in the following example.

MAP example for table Basic call processing

```
    RCVRKEY  RCVRTYPE  TMTYPE  TMNO  TMCKTNO       CARDCODE
-------------------------------------------------------------

RCVRMF    0         D     MTM     0        4        2X48AB
```

Datafilling table CLLIMTCE

Table common language location identifier maintenance (CLLIMTCE) lists the following information for each trunk group CLLI:

- abbreviated CLLI code for use by maintenance staff
- percentage of service circuits that can be removed before specific alarms are displayed
- type of test equipment at the far end
- index to test line control
- index to milliwatt data table
- signaling test runs after diagnostic test
- additional digits to be prefixed in addition to the four digits of subtable test line number.

Table CLLIMTCE is datafilled automatically by the system, when an entry is datafilled in table CLLI. Table CLLIMTCE should be checked for accuracy and maintenance, as required.

Datafill example for table CLLIMTCE

The following example shows sample datafill for table CLLIMTCE.

MAP display example for table CLLIMTCE

```
CLLI   SCLLI   MINALM   MAJALM   CRITALM   SYNCTYPE TSTNOIND
MWIDX   SIGTST   PRFXDIGS   DIAGDATA
_____________________________________________________________
RSMVER90 RSMVER90   5      10         50     SYN        0
 0         Y          N        ( 2 )
```

Datafilling table ALMSCGRP

Table alarm scan group (ALMSCGRP) lists DMS-100 alarm scan circuits (alarm sensors), their locations, and their card types. The Star Hub is provisioned with a universal maintenance pack (UMP) card (NTTR73AA). This card must be listed in table ALMSCGRP.

The UMP card in the Star Hub defines the SC group for the user-defined scan points in the Star Module. Each scan group contains 8 scan points. Scan groups 0 and 1 are reserved for the UMP. Since each UMP supports 12 scan points, and scan groups 4 through 7 are reserved for Star Modules of that Hub.

Basic call processing (continued)

There are two scan points for each Star Module and four Star Modules in each scan group. The following table describes this information.

Star Module SC groups

Star Module number	UMP	SC group
0-3	n (see note)	4
4-7	n	5
8-11	n	6
12-15	n	7

Note: The UMP number is either 0 or 1. The same UMP number is used for all Star Module groups.

The RLD supports two user-defined scan points and one user-defined distribution point. These points are datafilled in the CM. To support these definitions, the UMP card allows the definition of an individual Star Module. To allow user-defined definitions for each RLD, four SC points groups and two SD points groups can be defined for each Star Hub. All groups (SC and SD) must be defined on the same UMP card for each Star Hub.

Note: There is no hardware relationship between a specific UMP card and the RLDs. One UMP is used for table control purposes.

Each one of the SC groups represent four RLDs. The following figure shows the mapping of RLDs to the SC group and the SC group's bits.

Mapping RLD SC groups in the CM

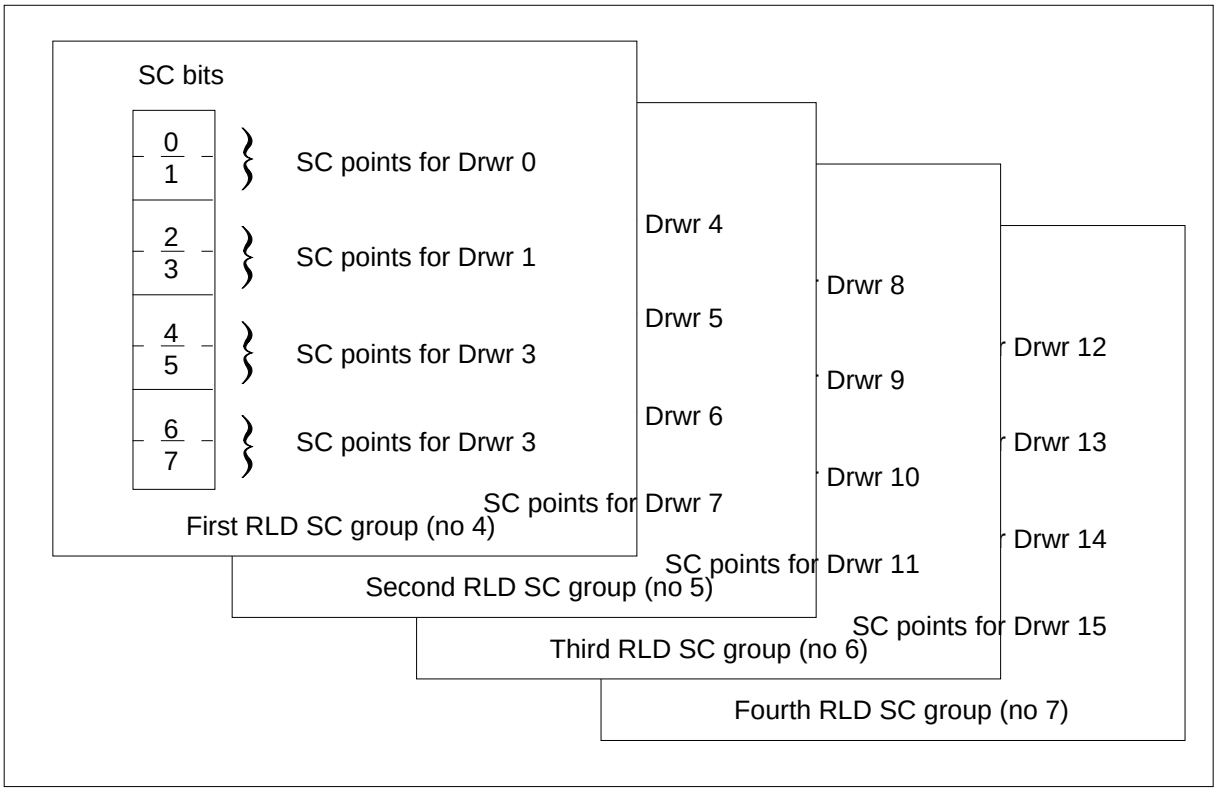

Datafill example for table ALMSCGRP

The following example shows sample datafill for table ALMSCGRP.

MAP display example for table ALMSCGRP

```
SCGROUP  TMTYPE   TMNO   TMCKTNO  CARDCODE
_____________________________________________
   19.   UMP.       0         0   NTTR73
   20    UMP        0         1   NTTR73
   21    UMP        1         0   NTTR73
   22    UMP        1         1   NTTR73
   39    UMP        0         4   NTTR71
```

Datafilling table ALMSC

Table alarm scan (ALMSC) identifies the function of the assigned scan points in the alarm scan groups. The Star Hub contains a UMP card. The Star Module uses the UMP card. The scan points for the Star Hub and Star Module must be listed and assigned to scan groups in table ALMSC. In “Datafilling

Basic call processing (continued)

table ALMSCGRP", table “Star Module SC groups" shows the mapping of scan points to Star Modules.

Datafill example for table ALMSC

The following example shows sample datafill for table ALMSC.

MAP display example for table ALMSC NEED NEW MAP OUTPUT

```
FUNCTION   SCGROUP   POINT   NORMALST   REPORT ALM   LOGIC
_____________________________________________________________
UMP_1_SC0_1     35      1      1  N   MJ N (UMP_1_SD_3 N N)
                                          (UMP_1_SD_4 N N)
UMP_1_SC0_7     35      7      0  Y   CR N (UMP_1_SD_5 N N)
UMP_2_SC0_1     36      1      1  N   MJ N (UMP_2_SD_0 N N)
                        1      1  N   MJ N (UMP_2_SD_7 N N)
RLD_0_SC_1      39      0      1  N   MJ N (RLD_0_SD_1 N N)$
RLD_0_SC_2      39      1      1  Y   CR N (UMP_0_SD_1 N N)$
```

Datafilling table ALMSDGRP

Table alarm signal distribution group (ALMSDGRP) lists DMS-100 alarm SD circuits (alarm drivers), locations, and card types. The Star Hub is provisioned with a UMP card. This card must be listed in table ALMSDGRP.

The SD points for the Star Module each contain eight SD points. The SD group 2 is reserved for the UMP, since each UMP supports 8 SD points, and SD groups 8 and 9 are reserved for Star Modules of that Star Hub. There is one SD point for each Star Module, with eight Star Modules in each SD group. The following table describes this information.

Star Module SD groups

Star Module number	UMP	SD group
0-7	n (see note)	8
8-15	n	9
Note: The UMP number is either 0 or 1. The same UMP number is used for all Star Module groups.		

Each one of the SD groups represents eight RLDs. The following figure shows the mapping of RLDs to the SD group and the SD group's bits.

Mapping RLD SD groups in the CM

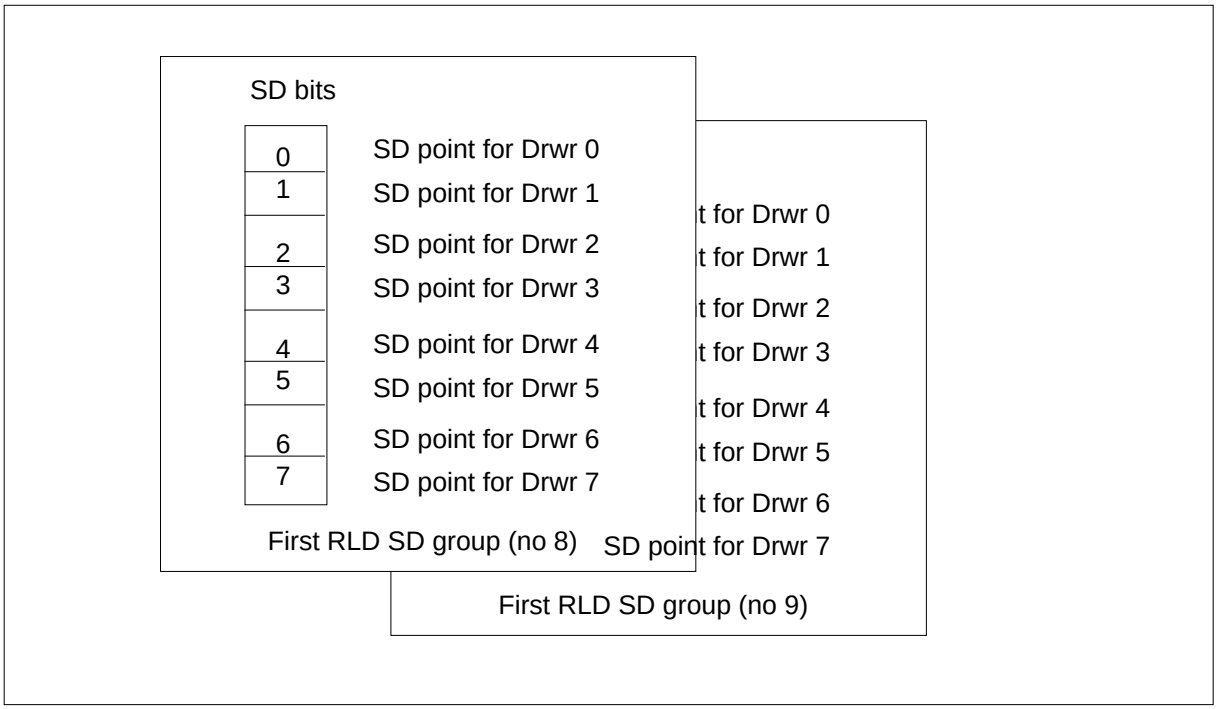

Datafill example for table ALMSDGRP

The following example shows sample datafill for table ALMSDGRP.

MAP display example for table ALMSDGRP

```
SDGROUP   TMTYPE TMNO   TMCKTNO CARDCODE
_____________________________________________
    11       UMP 0        2        NTTR73
    12       UMP 1        2        NTTR73
    13       UMP 0        8        NTTR71
```

Datafilling table ALMSD

Table alarm signal distribution (ALMSD) identifies the function of each assigned SD points in the SD groups. The Star Hub contains two UMP cards. The SD points for the Star Hub must be listed and assigned to SD groups in table ALMSD. The mapping of signal distribution points to Star Modules is defined according to the “Star Module SD groups" table presented with “Datafilling table ALMSDGRP."

Datafill example for table ALMSD

The following example shows sample datafill for table ALMSD.

Basic call processing (continued)

MAP display example for table ALMSD

```
 FUNCTION SDGROUP POINT  NORMALST AUDIBLE LAMPTEST
_____________________________________________________
  STARSD1      11   0        0        N        N
  STARSD2      11   1        0        N        N
  STARSD3      11   2        0        N        N
  STARSD4      11   3        0        N        N
  STARSD5      11   4        0        N        N
  STARSD6      11   5        0        N        N
  STARSD7      11   6        0        N        N
  STARSD10     12   0        0        N        N
  STARSD11     12   1        0        N        N
  STARSD12     12   2        0        N        N
  STARSD13     12   3        0        N        N
  STARSD14     12   4        0        N        N
  STARSD15     12   5        0        N        N
  STARSD16     12   6        0        N        N
  STARSD17     12   7        0        N        N
  RLD_0_SD_1   13   0        1        N        N
  RLD_0_SD_2   13   0        1        N        N
```

Datafilling table DFINV

Table distribution frame inventory (DFINV) stores information for up to 31 distribution frames located at the host or in remote locations. The information in this table is provided by Nortel.

An entry in table DFINV corresponding to the Star Hub, must be included for the Star Hub to operate properly. Table DFINV associates the site name for the Star Hub with a unique distributing frame name in field DFNAME. This table is datafilled to support automatic line testing (ALT).

Datafill example for table DFINV

The following example shows sample datafill for table DFINV.

MAP display example for table DFINV

```
 DFNO      DFNAME      MAXZONE     SITE
_____________________________________________
  0        HOST            4       HOST
  1        RLCM            4       REM1
  2        HUB             4       REM2
```

Datafilling table TOFCNAME

Table terminating office name (TOFCNAME) is used to list all terminating offices in the switch. A terminating office (TOFC) is a unique combination of area code and office code.

Up to 1024 TOFCs can be specified in the universal directory number (DN) system, but only 100 TOFCs can be defined in North American offices.

The AREACODE field identifies the area code where the terminating office resides. The area code is previously defined in table SNPANAME or table HNPACONT.

The OFCCODE field identifies the second part of the terminating office code and is a subarea of AREACODE. A number may not to be both an AREACODE and an OFCCODE. For example, if 613 is an AREACODE, then it may not be an OFCCODE within any AREACODE.

This table must be datafilled after tables that define the serving numbering plan area (SNPA), that is, HNPACONT, DNHEAD, and SNPANAME.

This table must be datafilled before any table that assigns directory numbers, such as HUNTGRP, LENLINES, or IBNLINES.

Datafill example for table TOFCNAME

The following example shows sample datafill for table TOFCNAME.

MAP display example for table TOFCNAME

```
AREACODE     OFCCODE
_____________________________________________________________

    613       621
    819       622
    613       722
    613       222
    819       221
```

Datafilling table LINEATTR

Table line attribute (LINEATTR) assigns line class codes (LCC) and billing and screening information to lines in the DMS switch. In this table, all lines supported by the Star Remote System should be identified as private, coin, or private branch exchange (PBX).

Basic call processing (continued)

Each tuple of table LINEATTR corresponds to one tuple in table LENLINES, which identifies the physical location of the line circuit. The tuples are matched through the index field of table LINEATTR.

Datafill example for table LINEATTR

The following example shows sample datafill for table LINEATTR.

MAP display example for table LINEATTR

```
 LAIDX LCC
    CHGCLSS COST SCRNCL LTG STS PRTNM  LCANAME  LCABILL
                                ZEROMPOS  TRAFSNO MRSA
SFC  LATANM  MDI  IXNAME  DGCLAME  FANIDIGS
            RESINFO             OPTIONS
_____________________________________________________________
 0 1FR
       NONE   NT   FR01   0   613    POTS   LCA1     N
                                    CTOP    20    NIL
NILSFC  NILLATA    0  NIL     NIL    00
                N               (HOT)$
 2 1FR
       NONE   NT  NSCR    0   819    POTS   LCA1    N
                                    CTOP    21    NIL
NILSFC  NILLATA1   0  NIL     NIL    00
                N               (HOT)$
 3 1MR
      NONE   NT   NSCR    0   819    POTS   LCA1     N
                                    CTOP    22     NIL
NILSFC  NILLATA2   0  NIL
                N               $
 4 CCF
    NONE   LO   FR01    0   613    POTS   LCA1    N
                                    CTOP    23     NIL
NILSFC  NILLATA1   0  NIL
                N               $
```

Datafilling table NUMDIGS

The number of digits (NUMDIGS) table stores information needed for Star Hub emergency stand-alone (ESA) support. Table NUMDIGS is an extension of table LINEATTR since both tables use the same index. In addition, the real serving numbering plan area (SNPA) and the real number of digits belong to a

subscriber that is connected to the Star Remote System. The datafill sequence is

- the default tuple is AREACODE = 0 and DIGSINDN = 7
- enter a tuple in table LINEATTR with the specific LATTR key
- enter a tuple in table NUMDIGS with the same LATTR key

The following table lists datafill for table Basic call processing.

Datafilling table NUMDIGS

Field	Subfield or refinement	Entry	Explanation and action
LTTR		0 to 31999	Line attribute. Index from 0 to 1023, like the value in table LINEATTR.
AREACODE		Vector of 1 to 5 digits, in the range of 0 to 9	The real SNPA that belongs to the group that have the same line attribute index. Up to five digits. The default is 0.
DIGSINDN		3 to 7	Digits in directory number. The real number of digits in the directory number of all the subscribers belonging to that LATTR. The default is 7.

Datafill example for table NUMDIGS

The following example shows sample datafill for table Basic call processing.

MAP display example for table Basic call processing

```
TABLE: NUMDIGS

LATTR                AREACODE                  DIGSINDN
_____________________________________________________
34                    02                        4
45                    070                       5
```

Datafilling table LNINV

The line inventory (LNINV) table associates the site name from table SITE to each physical line circuit in the Star Remote System. This table that defines the line equipment number (LEN) of a line, indicates the software location and its hardware characteristics. Each line card in the Star Remote System should be represented by a tuple in table LNINV.

Basic call processing (continued)

The subfields used to identify the line card have been altered so that a LEN can identify a Star Remote System line card. In a LEN for a Star Remote System, the fields for the LEN are defined as follows:

- SITE
- FRAME
- UNIT
- SUBGROUP
- CIRCUIT

Note the following table interactions:

- The line assignment for coin lines is made in table LENLINES. The LNATTIX field relates to the line class code, coin first (CCF), coin dial-tone first (CDF), or coin semi-postpay (CSP), in table LINEATTR.
- POTS lines LCMLSG do not have related tuples in keyset-type tables.
- For Meridian business sets, (MBS), the VARTYPE in table LCMINV must be NTPROP.
- ISDN lines that are added to the Star Hub or Star Module are automatically put in the WORKING state, even if it is datafilled as HASU since special connections to an EDCH are not required.
- No more than 14 ISDN LENs can be defined on one logical remote drawer.

The following table shows the datafill related to Basic call processing for table LNINV. Only those fields that apply directly to Basic call processing are shown.

For a description of the other fields, refer to the data schema section of *Translations Guide*.

Datafilling table LNINV (Sheet 1 of 2)

Field	Subfield or refinement	Entry	Explanation and action
LEN		alphanumeric	Line equipment number. This field contains the following subfields: SITE, FRAME, UNIT, SUBGROUP, and CIRCUIT.
	SITE	alphanumeric	Site. Enter the location of the Star Hub (four-character alphanumeric). This entry is not optional, and there is no default value assigned to it.

Datafilling table LNINV (Sheet 2 of 2)

Field	Subfield or refinement	Entry	Explanation and action
	FRAME	0 to 511	Frame. Enter the Star Hub frame number, which is not a physical frame but a software entity that represents the group the Star Hub belongs to at the site.
	UNIT	0 to 2	Star Hub unit. Enter the number representing the line drawer shelf in the Star Hub.
	SUBGROUP	0 to 35	LCM subgroup. Enter the number of subgroups in the line drawers.
	CIRCUIT	0 to 31	LCM circuit. Enter the number of circuits in the subgroups. The range is 0-31.
CARDCODE		alphanumeric	Card code. Enter the PEC of the line card or line card carrier.
PADGRP		STDLN, UNBAL, PPHON, LRLM, and NPDGP.	Pad group. Enter the name of the pad group assigned to the line circuit in the pad data table. The values include STDLN, UNBAL, PPHON, LRLM, and NPDGP.
STATUS		HASU, WORKING, UNEQUIP, CUTOFF, and RESERVED.	Status. Enter the line inventory availability status. The values include HASU, WORKING, UNEQUIP, CUTOFF, and RESERVED.
GND		Y *or* N	Ground. Where line is ground start, enter Y. Otherwise, enter N for loop start.
BNV		NL	Balanced network value. Enter L when line circuit is configured for a loaded network. Otherwise, enter NL for nonloaded network.
MNO		N	Manual override. Enter Y when on-hook balance network test is to be prevented from updating field BNV in this table. Otherwise, enter N to allow off-hook balance network test to update field BNV in this table.
CARDINFO		NIL	Card information. The NIL value is the default. The values are NIL, SSLCC , or ISLCC.

Basic call processing (continued)

Datafill example for table LNINV

The following example shows sample datafill for table LNINV.

MAP display example for table LNINV

```
   LEN          CARDCODE  PADGRP STATUS GND BNV MNO CARDINFO
_____________________________________________________________
REM1  00 0 0  1  6X17AB  STDLN   HASU   N  NL  N  NIL
REM1  00 0 0  2  6X17AB  STDLN   HASU   N  NL  N  NIL
REM1  00 0 0  3  6X17AB  STDLN   HASU   N  NL  N  NIL
REM1  00 0 0  4  6X17AB  STDLN  WORKING N  NL  N  NIL
REM1  00 0 0  5  6X17AB  STDLN   HASU   N  NL  N  NIL
REM1  00 0 0  6  6X17AB  STDLN RESERVED N  NL  N  NIL
REM1  00 0 0  7  6X17AB  STDLN   HASU   N  NL  N  NIL
REM1  00 0 0  8  6X18AD  STDLN   HASU   N  NL  N  NIL
REM1  00 0 0  9  6X18AD  STDLN   HASU   N  NL  N  NIL
REM1  00 0 0 10  6X18AD  STDLN   HASU   Y  NL  N  NIL
REM1  00 0 5  0  6X17AB  STDLN   HASU   N  NL  N  NIL
REM1  00 0 5  1  6X17AB  STDLN   HASU   N  NL  N  NIL
```

Datafilling table HUNTGRP

Table hunt group (HUNTGRP) lists groups of subscriber lines assigned for certain MDC features to work. Enter the pilot DN for all hunt groups associated with the RLCM.

CAUTION

Use the SERVORD system to add and delete tuples to and from table HUNTGRP.

Using the table editor to datafill this table can result in incompatible features being assigned to the line.

Datafill example for table HUNTGRP

The following example shows sample datafill for table HUNTGRP.

MAP display example for table HUNTGRP

```
HTGRP   SNPA        DN      GRPTTYPE
                                                GRPDATA
_____________________________________________________________
21      919     7820280     DNH Y N N  RCVD          N
                                    N
                                N                    N
                                N     3              $
19      919     7821111     DLH Y N N  RCVD          N
                                    N
                                N                    N
                                N     1              $
```

Datafilling table LENLINES

Table line equipment number to lines (LENLINES) associates each line circuit by LEN with its remote location and its attributes from table LINEATTR. Each line card in the Star Hub should be represented by a tuple in table LENLINES.

CAUTION
Use the SERVORD system to add and delete tuples to and from table LENLINES.
Using the table editor to datafill this table can result in incompatible features being assigned to the line.

Table LENLINES contains the following data:

- site name assigned to remote location
- party where a DN is assigned
- ringing code assigned to a DN

Note: The DN field of table LENLINES accommodates up to 15 digits.

The following table shows the datafill specific to Basic call processing for table LENLINES. Only those fields that apply directly to Basic call processing are shown.

Basic call processing (continued)

For a description of the other fields, refer to the data schema section of the *Translations Guide*.

Datafilling table LENLINES (Sheet 1 of 2)

Field	Subfield or refinement	Entry	Explanation and action
LEN		alphanumeric	Line equipment number. This field contains the following subfields: SITE, FRAME, UNIT, LINE SUBGROUP, and SLOT.
	SITE	alphanumeric	Site. Enter the four-character alphanumeric value representing the PM location.
	FRAME	0 to 99	Frame. Enter the number representing the group the Star Hub belongs to at the site.
	UNIT	0 to 2	Unit. Enter the number representing the line drawer shelf within the Star Hub.
	LINE SUBGROUP	0 to 35	Line subgroup number. Enter the number representing the line subgroup in the line drawer of the Star Hub.
	CIRCUIT	0 to 31	Circuit number. Enter the number representing the line card in the line drawer in the Star Hub.
PTY		R1 to R15, T1 to T15 *or* single	Party and ringing combination. When the line is assigned to a two-, four-, eight-, or ten-party line, enter the party of the DN assigned to the line. The range is R1 through R5 and T1 through T5. If assigned to an individual line, enter S for single party.
RINGCODE		0 to 7	Ring code. Enter the ring code assigned to the line.
DN		numeric	Directory number. Enter the DN assigned to the line.
SIGTYPE		DP *or* DT	Signal type. Enter the type of pulsing expected, DP (dial pulse) or DT (Digitone).

Datafilling table LENLINES (Sheet 2 of 2)

Field	Subfield or refinement	Entry	Explanation and action
LNATTIDX		0 to 1023	Line attribute index. Enter the index into the line attribute table LINEATTR.
OPTLIST		alphanumeric	Option list. Enter a list of up to 20 basic options assigned to the DN. Each three-character option must be separated by a blank. Enter invalid data to display the list of available options.

Datafill example for table LENLINES

The following example shows sample datafill for table LENLINES.

MAP display example for table LENLINES

```
              LEN PTY RINGCODE  DN
                                SIGTYPE  LNATTIDX  OPTLIST
_____________________________________________________________
REM1  0 0  0 23 S   0   6213010
                                DP       0         $
REM1  0 0  0 24 S   0   6213030
                                DP       0         $
REM1  0 0  0 26 S   0   6213050
                                DT       0         $
REM1  0 0  0 28 S   0   6213060
                                DP       0         $
REM1  0 0  0 29 S   0   6213070
                                DP       0         $
REM1  0 0  0 30 S   0   7771113
                                DT     160         $
REM1  0 0 05 10 R1  0   6213300
                                DT     200         $
REM1  0 0 05 10 T1  0   6213301
                                DT     200         $
REM1  0 0 05 10 R2  0   6213302
                                DT     200         $
```

Basic call processing (continued)

Datafilling table LENFEAT

Table line equipment number feature (LENFEAT) contains assignments of any special line features for each line circuit. If a line has no features, a tuple for the line does not appear in this table.

> **CAUTION**
> **Use the SERVORD system to add and delete tuples to and from table LENFEAT.**
> Using the table editor to datafill this table can result in incompatible features being assigned to the line.

Datafill example for table LENFEAT

The following example shows sample datafill for table LENFEAT.

MAP display example for table LENFEAT

```
        LEN    PTY   DF
                                DATA
_____________________________________________________
REM1 00 0  0 26 S PIC PIC
                                TR1 Y
REM1 00 0  5 26 S PIC PIC
                                TR1 Y
REM1 00 0 10 26 S PIC PIC
                                TR1 Y
REM1 00 0 15 26 S PIC PIC
                                TR1 Y
REM1 00 1  0 26 S PIC PIC
                                TR1 Y
REM1 00 1  5 26 S PIC PIC
                                TR1 Y
REM1 00 1 10 26 S PIC PIC
                                TR1 Y
REM1 00 1 15 26 S PIC PIC
                                TR1 Y
REM1 00 0  5 28 S PIC PIC
                                TR1 Y
REM1 00 0 15 28 S PIC PIC
                                TR1 Y
REM1 00 1 15 28 S PIC PIC
                                TR1 Y
```

Datafilling table HUNTMEM

Table hunt group member (HUNTMEM) lists the members assigned to the hunt groups listed in table HUNTGRP. Enter all members assigned to Star Hub line hunt groups.

CAUTION
Use the SERVORD system to add and delete tuples to and from table HUNTMEM.
Using the table editor to datafill this table can result in incompatible features being assigned to the line.

Datafill example for table HUNTMEM

The following example shows sample datafill for table HUNTMEM.

MAP display example for table HUNTMEM

```
HTGRP  SEQNO   INSERT                          HTMDATA
_____________________________________________________________
 50      0      N                L  RLCM  00  02  24  N
 50      1      N                          D  6211902 N
 50      2      N                          D  6211903 N
 51      0      N                          D  6211904 N
 51      1      N                          D  6211905 N
 51      2      N                          D  6211906 N
 51      3      N                          D  6211907 N
 52      0      N                          D  6211908 N
 52      1      N                          D  6211909 N
```

Datafilling table DNROUTE

Table directory number route (DNROUTE) lists information for writable DNs in the switch. The tuples DN_SEL=FEAT, FEATURE=MEETME, and FEATURE=PC, which formerly appeared in table WRDN, will not appear in table DNROUTE.

The AREACODE and OFCCODE fields are the same as they appear in table TOFCNAME and must have been previously specified there. The STNCODE field is DEFG in North America.

Basic call processing (continued)

The DNRESULT field is the same as in table DN. Enter numbers in these categories resulting from provisioning a Star Hub.

Note: Table DN is read only and contains data for all assigned and unassigned DNs, including those in DNROUTE. No input is necessary for this table.

Datafill example for table DNROUTE

The following example shows sample datafill for table DNROUTE.

MAP display example for table DNROUTE

```
AREACODE   OFCCODE   STNCODE              DNRESULT
_____________________________________________________________
   613       621      1000   FEAT DISA IBNTST 0 N N N Y $
   613       621      1010   FEAT DISA IBNTST 0 N N N Y $
   613       621      1096
   613       621      1117
   613       621      1181
   613       621      1251
```

Datafilling table HNPACONT.HNPACODE

Subtable home numbering plan area code (HNPACONT.HNPACODE) lists the route, treatment, or table where a translation must route for the three-digit codes, 000-999, within each serving number plan area (SNPA) or serving translation schemes, (STS), assigned in table HNPACONT.

Each three-digit code can be expanded into ten or more digits, if required, for compatibility with office equipment and other datafill.

Assign the code station ringer test, (SRT), to the NPA served by the Star Hub. If table TOFCNAME is changed, change subfield NXX of the CDRRTMT field to the DN where the SRT is assigned.

Datafill example for table HNPACONT.HNPACODE

The following example shows sample datafill for table HNPACONT.HNPACODE.

MAP display example for table HNPACONT.HNPACODE

```
POSITION ON (NPA) sub HNPACODE

 FROMDIGS  TODIGS
                                                  CDRRTMT
_____________________________________________________________
  1150   1150 STRG
                                                  24
  1155   1155 OPC4
                                                  25
   141    141 OPC3
                                                  22
   181    181 OPC3
                                                  23
   201    201  VCT
                                                  HNPI
   228    228 HRTE
                                                   1
   229    229 HRTE
                                                   1
   303    303 FNPA
                                                   0
   404    404 FNPA
                                                   0
   418    418 FRTE
                                                  29
   514    514 FRTD
                                                  10
```

Datafilling table MTAMDRVE

The metallic test access minibar driver (MTAMDRVE) network is a matrix of vertical and horizontal crosspoints. The matrix of vertical and horizontal crosspoints connect specified verticals to horizontals in the network.

The MTA network connects testing equipment on the horizontal crosspoints to circuits that require testing on the vertical crosspoints.

Table MTAMDRVE specifies the location and the type of the minibar driver assigned to a minibar switch. The NT3X09 driver has relays on the card and does not require an associated minibar switch.

If the RLCM is provisioned with a remote MTA in its RMM, table MTAMDRVE requires an entry that identifies the NT3X09 card. The 0, 0 crosspoint in the matrix identifies each minibar driver.

Basic call processing (continued)

The following table shows the datafill specific to Basic call processing for table MTAMDRVE. Only fields that apply directly to Basic call processing appear in the table.

For a description of the other fields, see the data schema section of this document.

Datafilling table MTAMDRVE

Field	Subfield or refinement	Entry	Explanation and action
MTAMEM		0 to 255	Metallic test access minibar driver member. Enter the MTA driver member number. This number is the key to the table.
VERT		0 to 639	MTAM driver vertical start location. Enter the vertical start location for the MTAM driver.
HORIZ		0 to 127	MTAM driver horizontal start location. Enter the horizontal start location for the MTAM driver.
TMTYPE		RMM	Trunk module type. Enter the type of trunk module where the minibar driver is mounted. In this condition, RMM is the type of module where the minibar is mounted.
TMNO		0 to 255	Trunk module number. Enter the number assigned to the remote maintenance trunk module.
TMCKTNO		0 to 27	Trunk module circuit number. Enter the circuit number of the trunk module where the minibar driver is assigned.
MTACARD		NT3X09AA *or* NT3X09BA	MTAM driver card. Enter the card code for the MTAM driver card. The AA version is a 4 by 8 matrix. The BA version is an 8 by 8 matrix.

Datafill example for table MTAMDRVE

Sample datafill for table MTAMDRVE appears in the following example.

MAP display example for table MTAMDRVE

```
MTAMEM    VERT  HORIZ    TMTYPE   TMNO   TMCKTNO  MTACARD
_____________________________________________________________
   0       0      0       MTM      0        24     3X09BA
```

Datafilling table MTAVERT

Table metallic test access vertical (MTAVERT) identifies the minibar switch verticals that connect the Star Hub to the MTA matrix in the UMP. The type of connection is single or multiple.

Note: A tuple for the Star Hub is required only for NA010/XPM10 to avoid problems with maintenance actions on Meridian Business Sets (MBS), also known as proprietary phones (P-phone). Thereafter, no tuples are required in table MTAVERT for the Star Hub.

The datafill for Basic call processing for table MTAVERT appears in the following table. Only fields that apply directly to Basic call processing appear in the table.

For a description of the other fields, see the data schema section of the *Translations Guide*.

Datafilling table MTAVERT

Field	Subfield or refinement	Entry	Explanation and action
VERT		0 to 639	Vertical. Enter the MTA vertical connection number.
VERTCONN		S or M	Vertical connection. Enter S or M to indicate single or multiple connections.
	SELECTOR	L or T	Selector. When selector L is used, the entry in VERTCONN is S. Enter datafill in subfields SITE, FRAME, and UNIT.
	SITE	alphanumeric	Site name. Enter the site name selected for the remote location.
	FRAME	0 to 99	Frame number. Enter the frame number.
	UNIT	0 to 1	Unit number. Enter the unit number.

Datafill example for table MTAVERT

Sample datafill for table MTAVERT appears in the following.

Basic call processing (continued)

MAP display example for table MTAVERT

```
VERT                        VERTCONN
_____________________________________________________
 0                    S L REM1  02 0
```

Datafilling table MTAHORIZ

Table metallic test access horizontal (MTAHORIZ) contains the assignment of horizontal agents to a horizontal and horizontal group of MTA minibars, (MTAM).

Horizontal agents include line test units, (LTU), metallic test units, (MTU), operator verification, metallic jacks, incoming test access trunks, extended MTA, and short circuits.

Different horizontal agents can use the same horizontal but must associate with different MTAMs or horizontal groups. A maximum of 160 different horizontal agents is allowed for a given horizontal.

Group a maximum of 32 MTAMs to connect to a single horizontal agent. A horizontal agent can only be used once.

The datafill for to Basic call processing for table MTAHORIZ. Only fields that apply directly to Basic call processing appear in this table.

For a description of the other fields, see the data schema section of this document.

Note 1: Horizontals are not reserved for dedicated LTUs. The LTUs that are not dedicated do not have assignment restriction.

Note 2: The user can assign an LTU to a host switching unit. The horizontal where the user assigns an LTU is multiplied to all minibar switches and assigned to the host switching unit. The user can assign an LTU to a remote location. The horizontal where the user assigned an LTU is multiplied to all minibar switches also assigned to the remote location.

Note 3: The minibar switch can be at a host switching unit. When this event occurs assignment restrictions are not present for the assignment of incoming test and operator verification trunks. Each incoming test access trunk and operator verification trunk requires one horizontal.

Note 4: The MTA configuration is small or medium. The horizontals where the incoming test access and operator verification trunks are assigned, are multipled to all minibar switches located at the host switching unit.

Note 5: The minibar switch is remote from the host switching unit. All horizontals are available for the assignment of incoming test access trunks, operator verification trunks, and for the extension of the metallic test access feature.

Note 6: Each incoming test access trunk, operator verification trunk, and vertical on the host minibar switch requires one horizontal. The vertical is assigned to a horizontal on the minibar switch located at the remote or host location.

Note 7: Restrict the number of metallic jacks in each DMS office to 256.

Note 8: For assignment of LTUs, incoming test access, operator verification trunks-to-trunk group, trunk subgroup, and trunk member tables, see tables CLLI, TRKGRP, TRKSGRP, and TRKMEM.

Note 9: Enter an LTU or MTU in table TRKMEM before you add the LTU or MTU to table MTAHORIZ. If an LTU or MTU is deleted from table TRKMEM, mark the equivalent tuple in table MTAHORIZ as deleted. The equivalent tuple is automatically restored if the LTU or MTU is added again to table TRKMEM.

Note 10: The memory for this table is dynamically allocated up to a maximum of 2000 tuples.

Datafilling table MTAHORIZ (Sheet 1 of 3)

Field	Subfield or refinement	Entry	Explanation and action
HORIZ		0 to 127	MTA horizontal. Enter the MTA horizontal where the test equipment, horizontal agent connects.
HORIZGRP		0 to 159	MTA horizontal group. Enter the horizontal group number that identifies the horizontal and the horizontal agent as a different tuple. The group allows assignment of different test equipment on the same MTA horizontal.
HORIZAGT		see subfield	This field contains several subfields. The value of the SELECTOR used determines the subfields.
SELECTOR			Selector. Range: S, L, T, B, E, MJ, J, and LA.
		S	Enter S for a timed short circuit.
		L	Enter L for LTU or MTU assignment. Complete subfields CLLI, EXTRKNM, and ALTUSE.

Basic call processing (continued)

Datafilling table MTAHORIZ (Sheet 2 of 3)

Field	Subfield or refinement	Entry	Explanation and action
		T	Enter T for incoming test access or operator verification trunk assignment. Complete subfields CLLI and EXTRKNM.
		B	Enter B for a board-to-board dedicated horizontal. Complete subfield BBTNR.
		E	Enter E to multiply a horizontal of a minibar switch from a host or remote to the vertical of a host minibar switch. Complete subfield EMTAVERT.
		MJ	Enter MJ for metallic connection to the tip and ring of the subscriber line. Complete subfields CLLI and MJACKNUM.
	Selector	J or LA	Selectors J and LA are for licensee use only.
	CLLI	see list	Common language location identifier. Enter LTU for a line test unit or MTU for a metallic test unit. For operator verification or an incoming test access trunk, enter the alphanumeric code that represents this trunk group in table CLLI.
		LTU	Enter LTU for line test unit.
		MTU	Enter MTU for metallic test unit.
		CLLI	For operator verification of an incoming test access trunk, enter the alphanumeric code that represents this trunk group in table CLLI.
		MJACK	Enter MJACK for metallic jack.
	EXTRKNM	0 to 9999	External trunk number. Enter the external trunk number assigned in table TRKMEM to the line test unit, metallic test unit, operator verification trunk, or the incoming test access trunk.
	ALTUSE	Y or N	Automatic line test use. Enter Y to use line test equipment for automatic line testing (ALT). Otherwise enter N.

Datafilling table MTAHORIZ (Sheet 3 of 3)

Field	Subfield or refinement	Entry	Explanation and action
	BBTNR	0 to 7	Board-to-board testing number. Enter the number of the board-to-board set with which this horizontal associates.
	EMTAVERT	0 to 639	Extended metallic test access column. Enter the associated vertical on the MTA in the host where the horizontal connects.
	MJACKNUM	1 to 256	Metallic jack number. Where the entry in subfield CLLI is MJACK, enter the metallic jack number.
MTAGRP		MTAMEM, HORIZ, and CONTMARK	MTA group. This field contains a list of MTA drivers that multiply to the test equipment. This field is a vector of up to 32 multiples of subfields MTAMEM, HORIZ, and CONTMARK.
	MTAMEM	0 to 255	MTA minibar driver member. Enter the MTAM driver member number where the horizontal connects.
	HORIZ	0	Horizontal. This is read-only field. This field provides information about the horizontal where the MTA drivers connect. Enter 0 to satisfy table control.
	CONTMARK	+ or $	Continuation mark. Enter a plus sign (+) when the next record specifies additional data. Otherwise, enter dollar sign ($) after last record.

Datafill example for table MTAHORIZ

Sample datafill for table MTAHORIZ appears in the following example.

MAP display example for table MTAHORIZ

```
HORIZ
        HORIZGRP      HORIZAGT
                         MTAGRP
_____________________________________________________
  0
        0        T      TDSK  0
                          ( 0 0)$
```

Basic call processing (continued)

Translation verification tools

Basic call processing does not use translation verification tools.

SERVORD

The Service Order System (SERVORD) provides operating companies with an efficient means of performing the following operations:

- adding or removing subscriber service lines
- adding or deleting line service options
- changing the LEN or DN of existing lines
- adding to or deleting features from lines

Tables LTMAP, IBNLINES, IBNFEAT, KSETINV, KSETLINE, KSETFEAT, LENLINES, LENFEAT, HUNTGRP, HUNTMEM, and DNINV are updated through SERVORD.

Table LTMAP contains information on ISDN signaling group (ISG) numbers, the PM type, the services provided, and the allocation of service channels. The ILDCHNL option is used for D-packet switching on Star Module terminals. This option is similar to the DCHCHNL option for D-packet switching on DCH terminals.

Table IBNLINES contains the line assignments for 500 and 2500 sets assigned to MDC, residential enhanced services (RES) and multiple appearance directory number (MADN) station numbers.

Table IBNFEAT identifies the line features assigned MDC lines in table IBNLINES. Each feature assigned to a MDC line requires one entry.

If a line is already datafilled in table LNINV, SERVORD automatically datafills the proper line attribute number for the line in table LENLINES. SERVORD also datafills the appropriate line options and feature information after the option, feature, or both have been entered using SERVORD.

CAUTION

Do not use the table editor to datafill SERVORD tables.
If SERVORD commands are not used to datafill tables KSETINV, KSETLINE, KSETFEAT, LENLINES, LENFEAT, HUNTGRP, HUNTMEM, and DNINV, incompatible features may be assigned to lines.

Table KSETINV contains inventory data for each card slot assigned to a business set or data unit. The user must enter the line card slot in table LNINV before the user enters the line card slot in table KSETINV.

Table KSETLINE contains data that relates to directory number appearances on business sets and data units. Each directory number-related key on the set requires one entry. The key for table KSETLINE is a line equipment number (LEN). The LEN applies to business sets and data units.

Table KSETFEAT lists line features assigned to business sets, data units and ISDN terminals in table KSETLINE. The key for table KSETFEAT is the LEN for business sets and data units.

Table LENLINES contains the following data:

- site name assigned to remote location
- party with the assigned directory number
- ringing code assigned to a directory number

Table LENFEAT identifies the features assigned to a specified line in table LENLINES.

SERVORD commands

The following table contains a list and description of the SERVORD commands.

SERVORD commands (Sheet 1 of 2)

Command	Description
SERVORD	Accesses the service order software.
ADD	Adds a line or lines to an existing hunt group. Adds existing lines to a call pickup group.
ADO	Adds options to lines. Adds existing lines to a directory number hunt (DNH) group.
DEL	Deletes a line or lines from a hunt group. Applicable to hunt group members except pilot
DEO	Deletes options from lines.

Basic call processing (continued)

SERVORD commands (Sheet 2 of 2)

Command	Description
NEW	Establishes new service. Applicable to individual nonhunt lines and party lines
OUT	Removes service. Applicable to individual lines and the pilot of hunt group

SERVORD limitations and restrictions

Basic call processing has no SERVORD limitations and restrictions.

SERVORD prompts

A service order may be entered in the prompt mode. System prompts user for input, or nonprompt mode. All input is entered in one command string.

When entry of a service order is complete, the entire service order is displayed for verification purposes. The system then prompts for a Y, N, or E. Enter N to abort the service order or E to edit the service order in prompt mode. On entry of a Y, the system verifies the service order.

If an error is detected, the SERVORD is rejected. A service order entered without a service order number (SONUMBER) is accepted by the system for immediate activation.

The following table shows the SERVORD prompts used to assign, delete, add, or change Basic call processing to or from a destination.

The following table shows the SERVORD prompts used to implement individual line options as shown in the example service orders.

SERVORD prompts for Basic call processing (Sheet 1 of 2)

Prompt	Valid input	Explanation
DN	Seven digits, entered with no spaces or hyphens	DN associated with the service to be established, modified, or deleted
LCC	1FR	Line class code of the service to be established, modified, or deleted. 1FR is the individual flat rate, residence, and business.
LATANAME	NILLATA (LATA name defined in table LATANAME)	The calling local access and transport area (LATA) name associated with the originator of the call.

Basic call processing (continued)

SERVORD prompts for Basic call processing (Sheet 2 of 2)

Prompt	Valid input	Explanation
LTG	0-255	Line treatment group number. Calculates the line attribute index when the DN and link control card (LCC) are insufficient to find an appropriate index
LEN_OR_LTID	alphanumeric	LEN or logical terminal identification. Associated with a service to be established, modified, or deleted, where • site is the site name (defaults to host) • ff is the frame number • u is the unit number • dd is the drawer number of the line spread group • cc is the line circuit number
OPTION	$	No line service options.

SERVORD example for adding, deleting, and changing Basic call processing

The following SERVORD examples establish an individual line without options, add an option to an individual line, delete an option from an individual line, and remove an existing individual line service.

Basic call processing (continued)

SERVORD example for Basic call processing in prompt mode

```
> SERVORD
SO:
>  NEW
SONUMBER:
> <RETURN>
DN
> 5320105
LCC:
> 1FR
LATANAME
> NILLATA
LTG:  0
> 230
LEN_ORLTID
> REM1 00 0 01 27
OPTION
> $
COMMAND AS ENTERED:
NEW NOW 90 11 13 PM 5320105 1FR NILLATA 230 REM1 00 0
01 27 $
ENTER Y TO CONFIRM, N TO REJECT OR E TO EDIT
> Y
```

SERVORD example for Basic call processing in no-prompt mode

```
> NEW $ 5320105 1FR NILLATA 230 REM1 00 0 01 27 $
```

Example of adding the negate partial ground (NPGD) option in the prompt mode

```
>ADO
SONUMBER:     SR 12345 Q 95  4 13 PM
>
DN_OR_LEN:
>4817251
OPTION:
>NPGD
OPTION:
>$
```

Example of adding the NPGD option in the no-prompt mode

```
>ADO $ 4817251 NPGD $
```

SERVORD example for deleting an option from an individual line in prompt mode

```
>SERVORD
SO:
>DEO
SONUMBER:
><RETURN>
DN_OR_LEN
>REM1 00 0 01 27
OPTION:
>DGT
OPTION:
>$
COMMAND AS ENTERED:
DEO NOW 90 11 13 PM REM1 00 0 01 27 ( DGT ) $
ENTER Y TO CONFIRM, N TO REJECT TO E TO EDIT
>Y
```

SERVORD example for deleting an option from an individual line in non-prompt mode

```
>DEO $ REM1 00 0 01 27 DGT $
```

Basic call processing (end)

SERVORD example for removing an existing individual line service in prompt mode

```
>SERVORD
SO:
>OUT
SONUMBER:
><RETURN>
DN:
>5320105
LEN_OR_LTID
>REM1 00 0 01 27
INTERCEPT_NAME
>BLDN
LEN:
>$
COMMAND AS ENTERED:
OUT NOW 90 11 13 PM $ 5320105 REM1 00 0 01 27 BLDN
ENTER Y TO CONFIRM, N TO REJECT OR E TO EDIT
>Y
```

SERVORD example for removing an existing individual line service in non-prompt mode

```
>OUT $ 5320105 REM1 00 0 01 27 BLDN $
```

How SERVORD affects tables LENLINES, LINEATTR, and LENFEAT

If a line is datafilled in table LNINV, SERVORD automatically datafills the line attribute number for the line in tables LINEATTR and LENLINES. SERVORD also datafills the appropriate line options and feature information in table LENFEAT after the option or feature. Or, both are entered using SERVORD.

ESA operation for the Star Remote System

Ordering codes

Functional group ordering code: BAS00012

Release applicability

NA0010/XPM10 and up

Prerequisites

ESA operation for the Star Remote System has no prerequisites.

Description

The emergency stand-alone (ESA) operation is an optional feature available for the Star Hub. The ESA module provides limited call processing capability to the Star Hub when it loses communication with the host site.

No additional hardware is required to support the ESA option. The ESA software runs in the NTTR77AA remote controller pack (RCP).

Note: Because there is no special hardware part of the ESA option, no data is entered in table XESAINV like other line concentrating devices that support ESA.

Operation

Communication to the RCP is over the same DS-1 links that connect the Star Hub (identified as “STAR" in the switch) to the host unit. The status of the messaging link between the host and the Star Hub determines entry into ESA mode.

The ESA channel connects to the ESA software within the RCP. A request from the ESA software when communications to the host are restored determines when ESA exit occurs.

The Star Hub monitors

- the state of the message channel to the host line trunk controller (LTC)
- the receiver framing status for the DS-1 link transmiting the message channel

If ESA is enabled, the Star Hub also checks for an LTC response to periodic loop-around messages. If there is an indication of link failure, the LTC sends a message to the DMS-100 CC informing it of the event. The DMS-100 central control (CC) uses this information to update a flag indicating a mate link failure.

ESA operation for the Star Remote System (continued)

If the host XPM has a messaging channel to the Star Hub, it sends a message to report the messaging failure. If ESA is enabled, every time there is a link failure or failure message, the Star Hub determines whether or not to enter ESA.

If the Star Hub link is bad and the mate unit of the Star Hub also has a failed link, the mate is inactive, or the inter-unit communication (IUC) link has failed, and ESA is requested. If both Star Hub units are active, both units must request ESA from the ESA software.

If the IUC has failed and one Star Hub unit's messaging link also fails, the unit with the failed link requests ESA while its mate can continue to communicate with the DMS host. In this case, the RCP card does not connect the Star Hub unit to the ESA process.

After a timeout, the unit that requested ESA determines that it cannot message to the ESA software. It then removes the ESA request and drops activity. This causes the mate unit, which continues to communicate with the host, to take control of the affected unit's calls.

To allow for applications where brief link interruptions are frequent, the Star Hub may be datafilled to delay requesting ESA until a link failure condition has persisted for a certain number of seconds. If messaging to the host is restored within this period, no ESA request is made. The value of N is set by an optional datafill message from the host giving the delay in units of 500 ms from 0 through 127. A default delay is provided.

Once in ESA, the messaging link from the Star Hub goes to the ESA software. It has complete control over all calls. When the ESA software regains its link to the host and is ready to surrender control, it sends a command to both units of the Star Hub requesting an ESA exit.

Translations table flow

The following is a list of ESA operation for the Star Remote System translations tables:

- LCMINV
- ESAPXLA
- CUSTHEAD

The ESA operation for the Star Remote System translation process is shown in the flowchart that follows.

ESA operation for the Star Remote System (continued)

Table flow for ESA Operation for the Star Hub

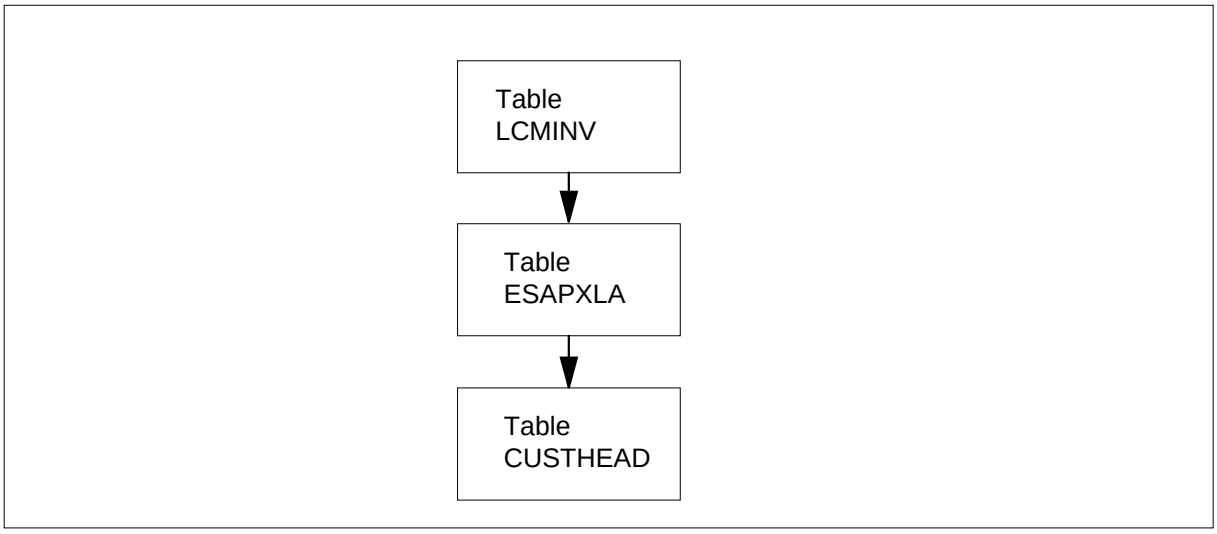

Limitations and restrictions

The following limitations and restrictions apply to ESA operation for the Star Remote System:

- Because the Star Hub supports warm ESA entry, non-ISDN intraswitched calls are not dropped. When the Star Hub exits ESA mode, all calls in progress are dropped.
- Before the Star Hub exits ESA, a time-out period ensures that host communication have been restored. The time-out period is defined in table OFCENG (parameter RLCM_XPMESAEXIT). This time-out period prevents the Star Hub from bouncing in and out of ESA.
- While in ESA, if one of the line drawers is busied or taken out of service, no recovery is supported while in ESA.
- All phones other than ISDN phones are supported during ESA mode. The following calls are not supported during ESA:
  - — mulitple-appearance directory number (MADN) secondary parties
  - — P-phone keys other than the primary DN (Key number 1)
  - — activation/deactivation of custom calling features
- Call progress tones are partially supported. Because no features are supported during ESA, many of the call progress tones are not required.
- The ESA call progress tones and detection of dual tone multi-frequency (DTMF) dialing is supported by the universal maintenance pack (UMP). If

ESA operation for the Star Remote System (continued)

only one UMP is provisioned, the number of DTMF receivers is reduced from 32 to 16.

- While in ESA, downloadable tones for the UMP are not supported.
- There is no busy tone for a party calling their own party number because no automatic number identification (ANI) is performed.
- Party line circle digits are not supported during ESA.
- The following automatic line (AUL) features are supported while the Star Hub is in ESA mode:
  - AUL with a maximum of 15-digit directory number for POTS and IBN lines
  - AUL must be datafilled by SERVORD (the IBN EBS automatic line feature key is not functional)
  - manual lines are treated as automatic lines with the operator's number for the automatic line DN
  - maximum of 64 AUL lines for each Star Hub
- The following Hunt Group features are supported in ESA mode.
  - multiline (MLH)
  - distributed line (DNH)
  - directory number (DNH)
  - MLH, DLH, and DNH groups with sequential line hunting
  - DLH group is treated the same as the MLH group
  - no circular hunting for DNH
  - maximum of 26 hunt groups for each Star Hub
  - maximum of 520 hunt group members in all hunt groups
  - maximum of 520 members for each hunt group
  - remote make busy (RMB) is not supported
  - stop hunt is not supported

Interactions

The CC provides special support for ESA call processing. Basic maintenance, ESA entry and exit, and translation data support are provided in feature group BAS00012.

ESA operation for the Star Remote System (continued)

Activation/deactivation by the end user

The following procedure describes the steps necessary to activate the ESA feature package.

Activation/deactivation of ESA operation for the Star Hub by the end user requires the following steps.

1. Change the ESA field in table LCMINV from N to Y to enable the ESA feature.
2. If necessary, change the office parameters.
3. If necessary, datafill table ESAPXLA.
4. If necessary, datafill table CUSTHEAD.
5. The ESA feature for both units of the Star Hub is activated by doing the following actions at the PM MAP level:
   a. At PM level of MAP, post STAR star_number.
   b. BSY the STAR PM or UNIT.
   c. LOADPM PM CC ESADATAorLOADPM UNIT unit_number CC ESADATA.
   d. RTS the STAR PM or UNIT.

Billing

ESA operation for the Star Remote System does not affect billing.

Station Message Detail Recording

ESA operation for the Star Remote System does not affect Station Message Detail Recording.

Datafilling office parameters

Office parameters help the operating company prepare the office-dependent data for the switching unit. The following table shows the office parameters used by ESA operation for the Star Remote System.

For more information about office parameters, refer to *Office Parameters Reference Manual*.

ESA operation for the Star Remote System (continued)

The following table lists the office parameters used for ESA operation, the table names, and their associated forms.

Office parameters used by ESA operation for the Star Remote System

Table name	Parameter name	Explanation and action
OFCENG	RLCM_ESAENTRY_BADLINK	Used to control the performance of the STAR ESA feature when a carrier alarm is present.
OFCENG	RLCM_ESAENTRY_BADCSIDE	Used to control the performance of the STAR ESA feature when a carrier alarm is not present.
OFCENG	RLCM_XPMESAEXIT	Used to control the performance of the STAR ESA feature when communication to the host is restored.
OFCENG	RLCM_ESASDUPD_HOUR	Used to set the starting time to download ESA static data to all STARs, sequentially, according to data in table LCMINV.
OFCENG	RLCM_ESASDUPD_BOOL	Used to determine whether ESA static data should be downloaded to all ESA-equipped STARs nightly to update of the STAR ESA static data.
OFCENG	RLCM_ESA_NOTIFY_TONE	Used to provide a special ESA notification tone to the user in ESA mode.

The office parameters support ESA applications as follows:

- RLCM_ESAENTRY_BADLINK: DS-1 failure timeouts
- RLCM_ESAENTRY_BADCSIDE: loop-around message audit failure timeouts
- RLCM_XPMESAEXIT: ESA EXIT timeout
- RLCM_ESASDUPD_HOUR: RLCM ESA static data updates (nightly)
- RLCM_ESASDUPD_BOOL: RLCM ESA static data updates (nightly)
- RLCM_ESA_NOTIFY_TONE: dial-tone alert

The five office parameters are described in the sections that follow. For more information about office parameters, refer to *Office Parameters Reference Manual*.

ESA operation for the Star Remote System (continued)

Office parameter RLCM_ESAENTRY_BADLINK

This parameter is the desired delay between link failure and the STAR entering the ESA mode. The delay time is defined in 10-second intervals. For example, 6 means 60 seconds.

The default value for this parameter is 3 with a range of 3 through 100. To activate a change in the parameter, load the ESA data using the LOADPM command at the PM level of the MAP terminal with the affected STAR posted.

Office parameter RLCM_ESAENTRY_BADCSIDE

This parameter is the desired delay between failure of STAR communication with the central side (C-side) peripheral and the STAR entering the ESA mode. This condition is detected by the loop-around message mechanism.

The delay time is defined in 1-minute intervals. For example, 6 means 6 minutes.

The default value for this parameter is 15, with a range of 5 through 60. To activate a change in the parameter, load the ESA data by use of the LOADPM command at the PM level of the MAP terminal, with the ESA software posted.

Office parameter RLCM_XPMESAEXIT

This parameter is the desired delay between links being restored (or communication with C-side peripheral recovered) and the STAR coming out of ESA mode. The time is defined in 10-second intervals. For example, 2 means 20 seconds.

The default value is 0, which means the STAR is waiting for manual RTS. The range of value is 0 through 100. The activation is immediate upon changing the parameter.

Office parameter RLCM_ESASDUPD_HOUR

This parameter is the daily starting time to download ESA static data to all STARs sequentially according to the data defined in table LCMINV. The time is defined in 1-hour intervals. For example, 4 means 4 a.m. and 14 means 2 p.m.

The value chosen must comply with the following conditions:

- It is a time of low traffic on the switch.
- It is not the same time as the weekly LCM routine exercise (REX) test.
- It is not the same time as the Remote Switching Center (RSC) nightly update. See parameter RSC_ESASDUPD_HOUR in table OFCENG.

ESA operation for the Star Remote System (continued)

The default for this parameter is 4, with a range of 0 through 23. The activation is immediate upon changing the parameter.

Note: The STAR and RSC must not be on the same static data update hour because the result will be static data failure for both the STAR and RSC.

Office parameter RLCM_ESASDUPD_BOOL

This parameter determines if ESA static data should be downloaded to the update of the STAR ESA static data each night for all STARs with ESA.

If the value is not changed from the default value of Y, the static data are downloaded at the update each night.

If the value is changed to N, the static data is not downloaded at the nightly update. The activation is immediate upon changing the parameter.

Office parameter RLCM_ESA_NOTIFY_TONE

This parameter controls whether the subscriber hears a distinctive dial-tone burst (0.25 seconds on, 0.25 seconds off, for 7 seconds), to alert the subscriber the STAR is in ESA mode.

ESA control of translation facilities

When the STAR is under host control, translations are done by the DMS-100 CC. When the STAR is in ESA mode, translations are done by the ESA process in the RCP card using a subset of translation data from the DMS-100 CC. This subset is a snapshot of the DMS-100 CC data needed for ESA call processing. The translation data in the snapshot is known as static data.

Downloading the static data to the ESA software from the DMS-100 CC truncates some of the translation data. ESA logs are generated when the downloaded data exceeds the STAR ESA maximum.

STAR ESA mode is not entered until the ESA software is loaded with static data.

ESA static data must be downloaded from the DMS CC to the ESA software, if a change is made to any of the following tables:

- translation data tables
- table ESAPXLA
- table CUSTHEAD

ESA operation for the Star Remote System (continued)

The following table shows the translation data tables, entries, maximum entry types, and applicable ESA logs for downloading errors.

Static data for ESA translations

Table	Type	Maximum entry	Download warning log
Terminal data	Terminal data	640	N/A
Automatic line	1 for each AUL	64	ESA101
Customer group	1 for each group	32	ESA102
Prefix header	1 for each customer group	32	N/A
Prefix table	1 for each ESA prefix translator		ESA103
	plain old telephone service (POTS)	16	
	customer group	8	
Extension header	1 for each customer group	32	ESA104
Extension table	1 for each MDC extension translator	256	
ABCD	1 for each directory number (DN)	640	ESA105
EFG	EFG	1000	
Hunt header	1 for each hunt group	26	ESA106
Hunt member	1 for each hunt group	520	ESA107
Office parameter	1	1	N/A
Digitone receiver	1 for each Digitone receiver	30	N/A

ESA operation for the Star Remote System (continued)

Translation data tables

Translation data tables in static data are as follows:

- The terminal data table determines how to set up a call. Terminal data includes the following:
  - — line type
  - — DP or Digitone/DP signaling
  - — automatic or coin line
  - — AUL index to AUL data table
  - — customer group index to customer group data table
  - — customer group number for a Meridian Digital Centrex (MDC) line

  There is one entry for each terminal and a maximum of 640 terminals.
- The AUL table contains the DN of the terminator. There is one entry for each AUL with a maximum of 64 entries.
- The customer table contains the prefix table number for special number dialing and extension prefix table number for station dialing. There is one entry for each customer group. There can be a maximum of 32 customer groups.
- The prefix header table contains a maximum of 32 prefix numbers or special numbers up to a maximum of 15 digits each. There is one entry for each customer group and one POTS entry. There can be a maximum of 32 customer groups.
- The prefix table contains one entry for each ESA prefix translator. There can be a maximum of 16 entries for POTS and a maximum of 8 entries for each customer group.
- The extension header table contains one entry for each customer group. There can be a maximum of 32 groups.
- The extension table contains one entry for each MDC extension translator. There can be a maximum of 256 groups.
- ABCD table contains one entry for each DN. There can be a maximum of 640 entries. This table cannot be accessed.
- The EFG table has 1000 entries and cannot be accessed.
- The hunt header table contains one entry for each hunt group. There can be a maximum of 26 hunt groups.
- The hunt member table contains one entry for each hunt group. There can be a maximum of 520 members.

ESA operation for the Star Remote System (continued)

- The office parameter table is a single entry table.
- The Digitone receiver table contains the terminal identifications (TID) of all the Digitone receivers of the UMP in the STAR. These are the TIDs of the entries in table TRKMEM, that is, the CLLI of ESADGTR in the URM at the STAR. The TIDs are used by the ESA process to collect digits from Digitone phones. There is one entry for each Digitone receiver, with a maximum of 30 entries.

  Note: The normal state of these Digitone receivers under CC control is INB (Installation Busy). This prevents CC access when the UMP is in the InSv state.

Downloading translation data to the ESA process

Translation data is downloaded to the ESA software in the RCP in the following methods:

- The LOADPM PM CC ESADATA or LOADPM UNIT unit_number CC ESADATA command downloads data to the ESA software.
- The RTS command downloads data automatically to the ESA software if it cannot do call processing with existing data.
- Data can be loaded routinely during daily updates of the ESA software if specified in the RLCM_ESADUPD_HOUR office parameter.

Datafill sequence

The following table lists the tables that require datafill to implement ESA operation for the Star Remote System. The tables are listed in the order in which data are to be entered.

Datafill tables required for ESA operation for the Star Remote System

Table	Purpose of table
OFCENG	Office engineering. This table contains data on engineering parameters for the office. Refer to “Datafilling office parameters" for how ESA operation for the Star Remote System affected office parameters.
LCMINV	Line concentrating module inventory. This table lists the data assignments for each bay associated with a line concentrating module (LCM).
ESAPXLA	Emergency stand-alone prefix translation. This table stores special translation data for POTS and IBN lines.
CUSTHEAD	Customer group head. This table lists the names assigned to the blocks of data in table IBNXLA that store the data for the translation of digits.

ESA operation for the Star Remote System (continued)

Datafilling table LCMINV

Table LCMINV lists the data assignment for each bay associated with the STAR. If ESA is available, it must first be indicated in table LCMINV in the boolean field ESA. Enter Y if the STAR is equipped with the ESA option. Enter N if the STAR is not equipped with the ESA option.

The following table shows the datafill specific to ESA operation for the Star Remote System for table LCMINV. Only those fields that apply directly to ESA operation for the Star Remote System are shown.

For a description of the other fields, refer to the data schema section of this document.

Datafilling table LCMINV

Field	Subfield or refinement	Entry	Explanation and action
LCMINFO	ESA	Y or N	Boolean Y or N. Used to turn emergency stand-alone on or off. If the STAR is in service and operating company personnel change the ESA field in table LCMINV from N to Y, the following messages will be seen at the MAP terminal. • the in-service STAR unit will go in-service trouble (ISTb) with the reasons of `Invalid ESA Translation Data` and `Static Data and/or EXECs mismatch with CC` • the STAR goes ISTb with a reason of `LCM has ESA option, but ESA disable` • the following warning message is output at the MAP display `WARNING!Updated ESADATA will be downloaded during automatic nightly update or via the LoadPM CC ESADATA command. Until then, the ESADATA may possibly be obsolete, and as a consequence the ESA may be disabled.` Changing the ESA field from Y to N causes all the previous ESA ISTb messages to clear from the STAR.

ESA operation for the Star Remote System (continued)

Datafill example for table LCMINV

For the purpose of datafilling emergency stand-alone, only one entry is required: the boolean for ESA in field LCMTYPE.

The following example shows sample datafill for table LCMINV.

MAP display example for table LCMINV

```
    LCMNM FRTYPE SHPOS FLOOR ROW FRPOS   EQPEC    LOAD      CSPMNO
BICTST ADNUM   MEMSIZE
                                                                LCMTYPE
_____________________________________________________________________
REM1  01 0    HUB    1    0    A    1     NT8602  HUB10AL   LTC   1
     N    25   8M    8M
    STAR   Y   C  ( 0) ( 1) ( 2) ( 3) ( 4) ( 5) ( 6) ( 7)$ Y Y HDLC Y
```

Datafilling table ESAPXLA

Table emergency stand-alone prefix translation (ESAPXLA), contains special prefix translation data used for POTS and MDC customer group data assignments.

During regular operation of the STAR, under DMS CC control, this table is not used. Translations are performed normally. However, if communication with the host is lost and the STAR enters the ESA mode, this table is used in the prefix translations.

There are two parts of table ESAPXLA that are used when the STAR enters ESA mode: the prefix translation key (PXLAKEY) and the translation result (RESULT). The PXLAKEY field defines a set of prefix digits on a specific RLCM for all POTS lines or for a particular MDC customer group. The RESULT subfield specifies the action to take when a POTS customer group member of that STAR dials the prefix digits.

One of the subfields of PXLAKEY is the translator name (XLANAME). If the prefix translation is to be executed when the prefix digits are dialed from a POTS line on the STAR, ESAPOTS is datafilled in subfield XLANAME.

If the prefix translation is to be executed when an MDC customer group dials these digits, an alphanumeric name of up to eight characters is datafilled in subfield XLANAME. This same name must then be associated with a particular MDC customer group in table CUSTHEAD.

ESA operation for the Star Remote System (continued)

Translation actions

The six different types of action the translation can take are as follws

- access code (A)
- directed route (D)
- hunt group (H)
- line (L)
- standard route (R)
- treatment (T)

When the prefix digits are dialed, the various translations occur as follows:

- Choose the A option if the digits are to be retranslated. A new prefix translator name is entered and dial tone is decided.
- Choose the D option if a connection is made to a trunk with directed routing. The information about the route, the number of digits to collect and second dial tone is datafilled.
- Choose the H option if the call is to be routed to a hunt group. The information as to which hunt group, as datafilled in table HUNTGRP, is entered.
- Choose the L option if a connection is to be made to another line on the remote. Information that uniquely identifies the line to which the connection is to be made is datafilled.
- Choose the R option if a connection is to be made to a trunk with standard routing, and information about the route, the number of digits to collect, and the ambiguity of the code is entered.
- Choose the T option if a reorder tone is to be given or a “strip and translate," with or without a second dial tone, is to be executed, and the type of treatment desired is entered.

If XLANAME is ESATRMT (which is a reserved prefix translator name), the PREFIX field must contain an N and the selector in the RESULT field can be L, H, T, or R. Selectors A and D are not valid.

The following table shows the datafill specific to ESA operation for the Star Remote System for table ESAPXLA. Only those fields that apply directly to ESA operation for the Star Remote System are shown.

ESA operation for the Star Remote System (continued)

For a description of the other fields, refer to the data schema section of *Translations Guide*.

Datafilling table ESAPXLA (Sheet 1 of 2)

Field	Subfield or refinement	Entry	Explanation and action
PXLAKEY		see subfields	Prefix translator key. This key identifies a set of prefix digits on a certain site for a particular set of customers. It comprises the following subfields: XLANAME, NODE, and PMTYPE.
	XLANAME	alphanumeric up to 8 characters	Prefix translator name. If this translation is to be performed for any POTS line on the remote, enter ESAPOTS. If it is to be performed for a particular MDC customer group, enter any name up to eight characters and relate this name to a corresponding customer group in table CUSTHEAD.
	NODE	see subfields	Node. This subfield specifies the node where the translator identified by XLANAME is associated. This field is comprised of subfields PMTYPE, SITE, FRAME, LCMNO, and MODULE.
	PMTYPE	STAR	Peripheral module type. This subfield identifies the peripheral node as STAR. If LCM or STAR is specified in this subfield, then you must enter data in subfield LCMNO.
	LCMNO	see subfields	LCM number. LCMNO consists of subfields SITE, FRAME, and UNIT.
	SITE	alphanumeric	Site. Enter the site name assigned to the STAR location.
	FRAME	0 to 511	Frame. Enter the frame number of the STAR at the site specified in subfield SITE.
	UNIT	0 to 2	Unit number. This subfield specifies the STAR where this translator applies. For the STAR this is 0.

ESA operation for the Star Remote System (continued)

Datafilling table ESAPXLA (Sheet 2 of 2)

Field	Subfield or refinement	Entry	Explanation and action
	PREFIX	numeric up to 15 digits	Prefix digits. Enter the 1 to 15-digit prefix associated with the translation.
RESULT		see subfields	Translation result. This field contains subfield SEL.

The following table describes the subfields L, T, H R, D, and A of subfield SEL and shows the actions to take for each.

Subfields with SEL of L (Sheet 1 of 2)

Subfield	Entry	Explanation and action
LEN	alphanumeric	Line equipment number. This subfield defines the line where the call is to terminate. It is comprised of subfields SITE, FRAME, UNIT, LSG, and CIRCUIT.
SITE	alphanumeric	Site. Enter the name assigned to the site where the termination line is located. Because the remote is operating in ESA, there is no communication with the host. This site must match the site specified in the NODE.
FRAME	0 to 511	Frame. Enter the frame number at the site that contains the line card for the termination line. If PMTYPE is LCM, this frame number must match the frame number specified in subfield LCMNO, because ESA in a STAR can support communications only within the same STAR.
UNIT	0 to 2	Unit. Enter the unit number of the STAR in the SRHE frame where the line is assigned.
LSG	0 to 35	Line subgroup. Enter the number of the line subgroup of the STAR unit where the line card for that line is assigned.
CIRCUIT	0 to 31	Line card circuit number. Enter the line card circuit number of the line subgroup where the line card is assigned.

ESA operation for the Star Remote System (continued)

Subfields with SEL of L (Sheet 2 of 2)

Subfield	Entry	Explanation and action
AMBIG	Y or N	Ambiguous. If the prefix digits are completely unique, enter N. If the prefix digits may be dialed as the first digits of another number, enter Y. For example, digits 123 would be considered ambiguous if another acceptable number were 12356. If N is entered, the switching process begins immediately after the prefix digits are dialed. If Y is entered, the remote waits for further digits. If no digits are entered within a specified time, the switching process begins.
RNGCD	0 to 5	Ring code. Enter the code for the type of ringing associated with the line specified in the subfield LEN field.

The following table describes the subfield T of field SELECTOR.

Subfields with SEL of T

Subfield	Entry	Explanation and action
TRMT	REORDER, SRPXLA, or SRPDXLA	Treatment. Enter the type of treatment to be applied when these prefix digits are dialed. REORDER specifies the reorder tone, SRPXLA specifies strip and translate, and SRPDXLA specifies strip, second dial tone, and translate.

The following table describes the subfield H of field SELECTOR.

Subfields with SEL of H (Sheet 1 of 2)

Subfield	Entry	Explanation and action
HTGRP	0 to 32767	Hunt group number. Enter the number associated with the desired hunt group. The association between this number and the hunt group is made in table HUNTGRP.

ESA operation for the Star Remote System (continued)

Subfields with SEL of H (Sheet 2 of 2)

Subfield	Entry	Explanation and action
SEQNO	0 to 255	Sequence number. Enter the number associated with one member of the hunt group. The call attempts to connect with this hunt group member first. The association between the number and the hunt group member is specified in table HUNTMEM.
AMBIG	Y or N	Ambiguous. If the prefix digits are completely unique, enter N. If the prefix digits may be dialed as the first digits of another number, enter Y. For example, digits 123 are considered ambiguous if another acceptable number were 12356. If N is entered, the switching process begins immediately after the prefix digits are dialed. If Y is entered, the remote waits for further digits. If no digits are entered within a given time period, the switching process begins.

The following table describes the subfield R of field SELECTOR.

Subfields with SEL of R

Subfield	Entry	Explanation and action
RR	0 to 255	Route reference index. Specify the index of the route described in ESARTE where translation is to proceed.
NUMDIG	0 to 15	Collect digits. Specify the number of digits to collect before outpulsing.
AMBIG	Y or N	Ambiguous. If the prefix digits are completely unique, enter N. If the prefix digits may be dialed as the first digits of another number, enter Y. For example, digits 123 are considered ambiguous if another acceptable number were 12356. If N is entered, the switching process begins immediately after the prefix digits are dialed. If Y is entered, the remote waits for further digits. If no digits are entered within a given time period, the switching process begins.

ESA operation for the Star Remote System (continued)

The following table describes the subfield D of field SELECTOR.

Subfields with SEL of D

Subfield	Entry	Explanation and action
RR	0 to 255	Route reference index. Specify the index of the route described in ESARTE where translation is to proceed.
NUMDIG	0 to 15	Collect digits. Specify the number of digits to collect before outpulsing.
DIALTONE	Y or N	Dial tone. Indicates whether to give second dial tone after stripping the prefix digits.

The following table describes the subfield A of field SELECTOR.

Subfields with SEL of A

Subfield	Entry	Explanation and action
XLANAME	alphanumeric up to 8 characters	Prefix translator name. A name of up to eight characters that identifies the entries associated with another ESA prefix translator. This permits access to a new set of prefix translators. A table must already be associated with this XLANAME.
DIALTONE	Y or N	Dial tone. Indicates whether to give second dial tone after the prefix digits are stripped.

Datafill example for table ESAPXLA

The following example shows sample datafill for table ESPXLA.

MAP display example for table ESAPXLA

```
                      PXLAKEY                   RESULT
-----------------------------------------------------
ESAPOTS RCC REM1    0    411  L  REM1 00 0 00 02 Y 1
  IBN1 RCC REM1 0          6              T   SRPXLA
  IBN1 RCC REM1 0          9              T  SRPDXLA
ESATEST RCC REM1    0    611  L  REM1 02 2 00 01 N 1
```

As shown in the following figure, there are two remotes off this DMS-100 host office, a STAR and an RCC. Each record in table ESAPXLA applies to one of these remotes. The NODE field specifies the remote where the translator in this record applies.

ESA operation for the Star Remote System (continued)

The data for table ESAPXLA is entered into the DMS-100 host and is downloaded to the remote specified in the NODE field, according to the RLCM_ESASDUPD_HOUR and RLCM_ESASDUPD_BOOL parameters.

DMS-100 office data input example

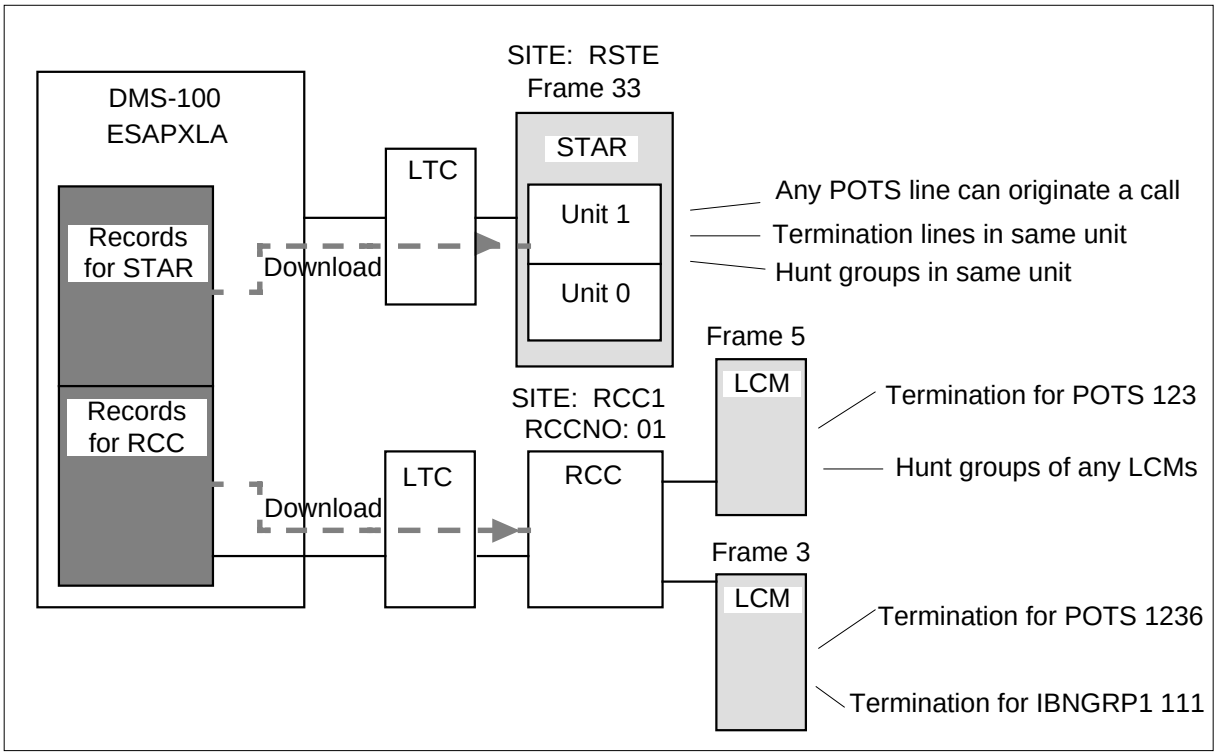

Prefix translations for the STAR using selectors L, T, and H during ESA

Using the previous figure as an example of a typical remote configuration, and the following figure as an example of typical table ESAPXLA datafill, prefix translation for various call sources are as follows:

- If any POTS user connected to frame 33, STAR unit 0 on site RSTE dials 911, a connection is made to hunt group number 3111 starting with member number 001.
- If any POTS user connected to frame 33, STAR unit 0 on site RSTE dials 123, the STAR waits for further digits. If it does not receive a digit within the allotted time period, the line is connected to circuit 12, LSG 11, on the same STAR unit.
- If any POTS user connected to frame 33, STAR unit 0 on site RSTE dials 123, the STAR waits for further digits. If a 6 is dialed within the allotted

ESA operation for the Star Remote System (continued)

time period, the line is connected in circuit 09, LSG 13 on the same STAR unit.

- If any POTS user connected to frame 33, STAR unit 0 on site RSTE dials 6, the user receives another dial tone, and further digits are translated.

Prefix translation example for selectors L, T, and H

COMMAND	PXLAKEY				RESULT	
	XLNAME	NODE		PREFIX UNIT	1	1 - SEL
		PMTYPE			L	LEN: SITE / FRAME / MODULE / LSG / CIRCUIT / AMBIG / RNGCD
		LCM	LCMNO: SITE / FRAME / MODULE		T	TRMT
		RCC	SITE / RCC NO		H	HT GRP / SEQ NO / 2 / 2-AMBIG
INP	ESAPOTS	STAR	RSTE 33 0	911	H	3111 001 N
	ESAPOTS	STAR	RSTE 33 0	123	L	RSTE 33 0 11 12 Y 4
	ESAPOTS	STAR	RSTE 33 0	1236	L	RSTE 33 0 13 09 N 2
	ESAPOTS	STAR	RSTE 33 0	6	T	SRPDXLA
	ESAPOTS	RCC	RCCI 01	911	H	3245 001 N
	ESAPOTS	RCC	RCCI 01	123	L	RCC1 05 0 19 31 Y 1
	ESAPOTS	RCC	RCCI 01	1236	L	RCC1 03 0 02 03 N 7
	IBNGRP1	RCC	RCCI 01	111	L	RCC1 03 0 01 12 N 3
	IBNGRP2	RCC	RCCI 01	111	T	REORDER
QUI						

Datafilling table CUSTHEAD

Table customer header (CUSTHEAD) links a customer group to the prefix translation table name identified in table ESAPXLA.

For MDC lines, it is necessary to link the information in the ESAPXLA prefix tables to a particular customer group. The option ESAPXLA is used to specify the prefix translator name associated with the customer group.

With ESA, datafill the OPTION and XLANAME fields of table CUSTHEAD. If OPTION does not have the ESAPXLA option set, no prefix translation for that customer group is provided.

ESA operation for the Star Remote System (end)

The following table shows the datafill specific to ESA operation for the Star Remote System for table CUSTHEAD. Only those fields that apply directly to ESA operation for the Star Remote System are shown.

For a description of the other fields, refer to the data schema section of this document.

The following variable entries are available for the OPTION and XLANAME fields in table CUSTHEAD.

Datafilling table CUSTHEAD

Field	Entry	Explanation and action
OPTIONS	ESAPXLA	OPTION. Enter option ESAPXLA.
XLANAME	alphanumeric up to 8 characters	Prefix translator name. Enter the one-to-eight characters that are assigned to the prefix translator in table ESAPXLA.

Note: Table ESAPXLA must be datafilled before table CUSTHEAD.

Datafill example for table CUSTHEAD

The following example shows sample datafill for table CUSTHEAD.

MAP display example for table CUSTHEAD

```
CUSTNAME    CUSTXLA     DGCOLNM     IDIGCOL
                                                OPTIONS
_____________________________________________________

POTSDATA    POTSXLA     POTS        NIL
                    ( VACTRMT 0) ( EXTNCOS  0)$
COMIBN2         CXN2        IBN2       NIL
(VACTRMT 0) (EXTNCOS 4) (SUPERCNF) (MHOLD 10 AUDIO1)
(CPR Y AUDIO1 3) (ESAPXLA ESAIBN) $
```

Translation verification tools

ESA operation for the Star Remote System does not use translation verification tools.

SERVORD

ESA operation for the Star Remote System does not use SERVORD.

HSTP0 DMS ADSL Capability

Ordering codes

Functional group ordering code: HSTP0002

Functionality ordering code: Not Applicable

Release applicability

NA0012/XPM12 and up

HSTP0 DMS ADSL Capability was introduced in NA012.

Prerequisites

HSTP0 DMS ADSL Capability has no prerequisites.

Description

HSTP0 DMS ADSL Capability provides the software to allow a Star Hub located at a remote site to provision and maintain 1-Meg Modem Service hardware. The following figure illustrates the 1-Meg Modem Service.

HSTP0 DMS ADSL Capability (continued)

1-Meg Modem Service network

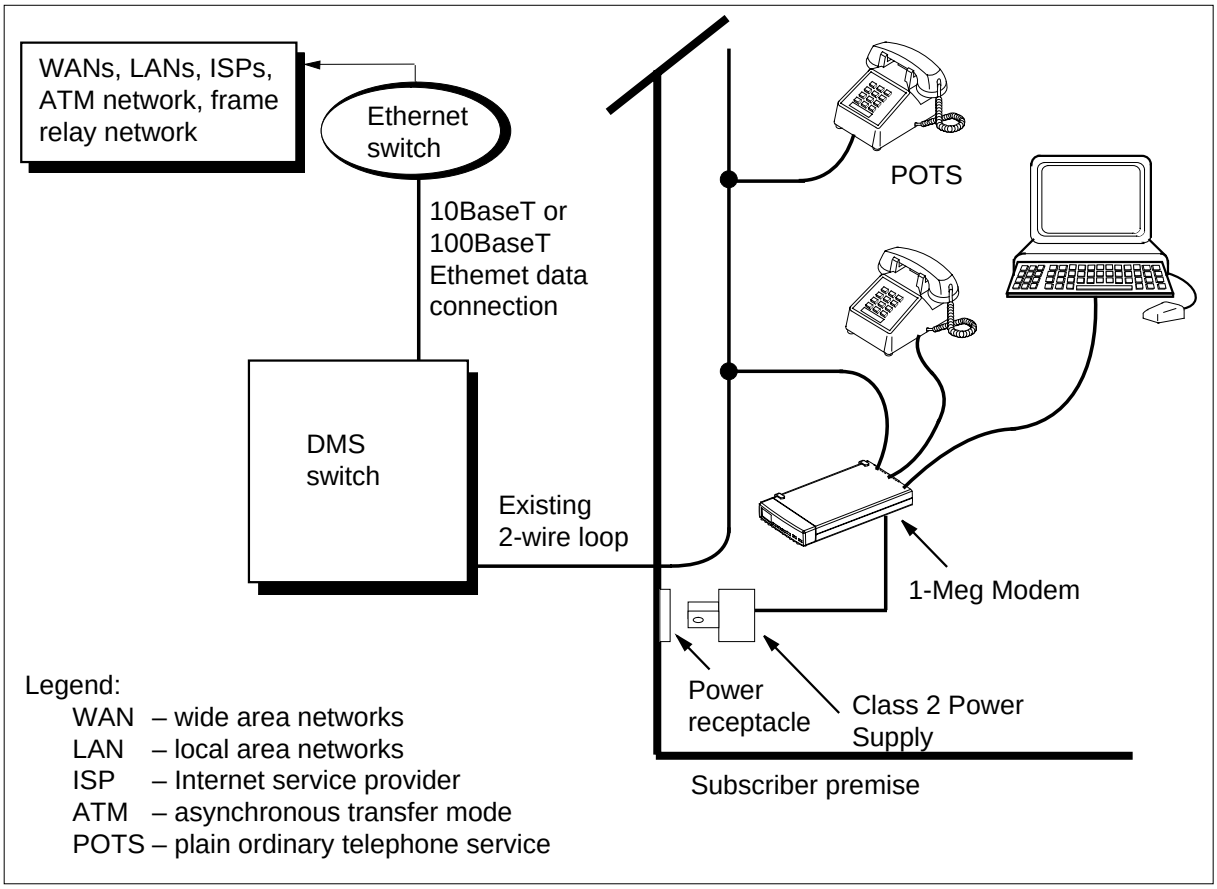

Operation

Before to this enhancement, Star Hub subscribers were limited to analog modem speed rates of 56 kbit/s. With analog modems, the subscriber cannot use POTS and data services at the same time. Additionally, data calls typically have longer holding times that reduce the operating company's traffic call hundredth seconds (CCS) values. HSTP0 DMS ADSL Capability addresses these limitations by:

- supports simultaneous use of data and all voice services
- increases data transmission rates
  - — up to 1280 kbit/s downstream
  - — up to 320 kbit/s upstream
- routing data traffic away from the DMS-100, to reduce the impact on the office's CCS values.

HSTP0 DMS ADSL Capability (continued)

Components

The 1-Meg Modem Service includes the following components:

- The 1-Meg Modem (1-Meg Modem) is customer-premise equipment (CPE) that connects the telephone line, extension telephone, and personal computer (PC). To the subscriber, the modem installs like a regular voice band modem, except the modem uses a 10BaseT Ethernet connection to the computer. Voice and data circuits are kept separate on the loop. This allows simultaneous voice and data traffic with no impact to other telephony features.
- An xDSL line card (xLC) replaces the subscriber's line card in an existing Star Hub line drawer. The card provides full voice service in parallel with high-speed data communication with the 1-Meg Modem.
- A data-enhanced bus interface card (DBIC) replaces the existing bus interface card (BIC) in the existing line drawer. The card provides a concentrating function for the voice and data connections within a single line drawer. The card also separates the voice and data traffic for routing to the appropriate networks.
- The xDSL Element Management System (xEMS) provides operations, administration, maintenance, and provisioning (OAM&P) functions from a Hewlett-Packard (HP) or Sun workstation. Based on HP OpenView, the xEMS is a graphical user interface (GUI) that uses icons and pull-down menus.

The DBIC and xLCs are backwards compatible with the current bus interface (BIC) and line card (LC) architecture. You can add either component without affecting existing subscriber features or services. The Star Hub handles all 1-Meg Modem Service voice traffic like existing plain old telephone service (POTS) calls.

Human machine interface (HMI)

This feature introduces a new command interpreter (CI) command: QXNET. Enter the QXNET command to query the engineering rules validation routines and format the output.

Translations table flow

The HSTP0 DMS ADSL Capability translations tables are described in the following list:

- Table LCMDRINV
- Table LNINV

HSTP0 DMS ADSL Capability (continued)

The following figure illustrates the HSTP0 DMS ADSL Capability translation process.

Translations process for HSTP0 DMS ADSL Capability

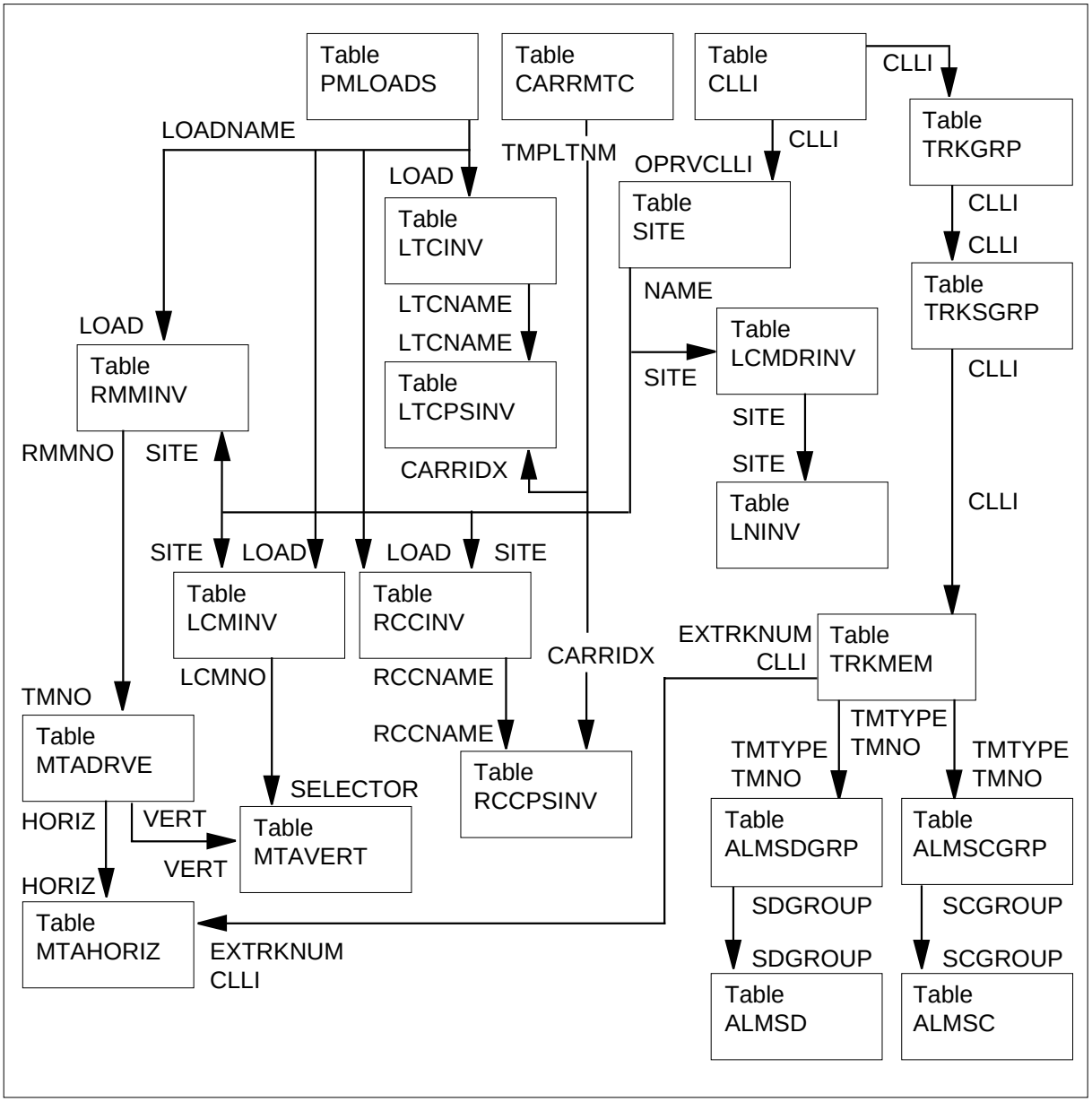

The following figure illustrates the table flow to datafill HSTP0 DMS ADSL Capability.

HSTP0 DMS ADSL Capability (continued)

HSTP0 DMS ADSL Capability table flow

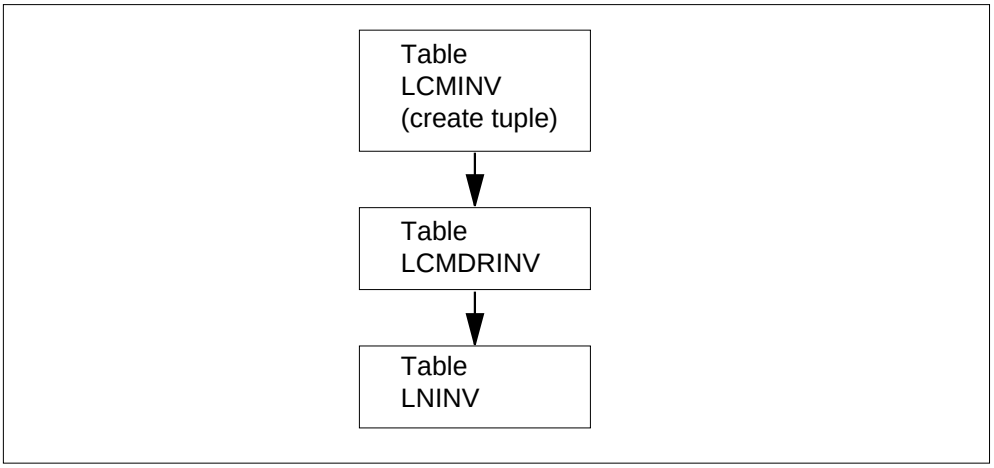

The datafill content for the tables in the previous flowchart follows:

- Table LCMINV lists data assignments for each Star Hub. Field SITE in table LCMINV matches the NAME tuple from table SITE. This field identifies the equipment for the switching unit and for all remote locations connected to the unit. Field LOAD in table LCMINV matches the LOADNAME tuple from table PMLOADS. This field stores the device location of each PM load file.
- Table LCMDRINV lists the Star Hub name, physical drawer numbers, product engineering code (PEC) of the drawers, drawer loadname, and media access control (MAC) address for each Star Hub. The line drawer applications use the information in this table to determine the functionality supported in each physical drawer.

  Table LCMDRINV only supports change operations and does not support manual additions or deletions. The switch automatically adds and deletes tuples to this table when a matching entry is made in table LCMINV.
- Table LNINV lists the site name with the line equipment number (LEN), and other data for each line card circuit in an office.

HSTP0 DMS ADSL Capability (continued)

Limitations and restrictions

The following limitations and restrictions apply to HSTP0 DMS ADSL Capability:

- Each drawer entered in table LCMDRINV to support HSTP0 DMS ADSL Capability must have a DBIC.
- Each drawer with a DBIC must have an xLC to support HSTP0 DMS ADSL Capability. If the drawer does not have a DBIC, the xLC will only provide voice services.
- Slot 16 of the odd numbered line subgroup in the 1-Meg Modem line drawer must remain empty to accommodate the NTEX54CA connector.
- The NTEX17DA xLC card occupies two vertical slots in the same line subgroup. Do not straddle an xLC card between the odd and even line subgroups.
- The 1-Meg Modem Service subscriber must have a 1-Meg Modem.
- When a tuple is added or deleted in table LCMINV, a corresponding tuple is automatically added or deleted in table LCMDRINV.

Interactions

HSTP0 DMS ADSL Capability has no functionality interactions.

Activation/deactivation by the end user

HSTP0 DMS ADSL Capability requires no activation or deactivation by the end user.

Billing

HSTP0 DMS ADSL Capability does not affect billing.

Station Message Detail Recording

HSTP0 DMS ADSL Capability does not affect Station Message Detail Recording (SMDR).

Datafilling office parameters

HSTP0 DMS ADSL Capability does not affect office parameters.

HSTP0 DMS ADSL Capability (continued)

Datafill sequence

The following table lists the tables that require datafill to implement HSTP0 DMS ADSL Capability. The tables are listed in the order in which they are to be datafilled.

Datafill tables required for HSTP0 DMS ADSL Capability

Table	Purpose of table
LCMDRINV	Line Concentrating Module Drawer Inventory. Lists data assignment for each drawer for a Star Hub.
LNINV	Line Circuit Inventory. Lists the data for each line card slot.

Datafilling table LCMDRINV

Verify the following datafill related to HSTP0 DMS ADSL Capability for table LCMINV. The following table only lists the fields that apply to HSTP0 DMS ADSL Capability. Refer to the *Translations Guide* for a description of the other fields.

Datafilling table LCMDRINV (Sheet 1 of 2)

Field	Subfield or refinement	Entry	Explanation and action
LCMNM			LCM name. Entry made up of subfields SITE, PM_type, and PM_no.
	SITE	REM1	Site name. Enter the name of the site of this Star Hub.
	FRAME	0 to 511	Frame number. Enter the Star Hub frame number.
	UNIT	0 to 2	Line module unit number. Enter the unit number which is 0 for the HUB.
DRWRTAB			Drawer table. This field is made up of subfields PHYDRNO, DRWRDATA, LDCPEC, and MACADDRESS.
	PHYDRNO	0 to 9	The physical drawer number.

Note 1: Changes to fields with multiple entries should be made in the PROMPT mode only. In nonprompt mode it is possible to leave out existing entries.

Note 2: Enter the continuation mark (+) in fields with multiple possible entries when more data is specified on the next line or more records will be entered. Enter the end mark ($) in fields with multiple possible entries after the last entry.

HSTP0 DMS ADSL Capability (continued)

Datafilling table LCMDRINV (Sheet 2 of 2)

Field	Subfield or refinement	Entry	Explanation and action
	LDCPEC	NTEX54CA	Line drawer control card PEC. Enter the PEC code of the DBIC.
	DRWRPEC	NT6X05AA	The physical line drawer PEC
	MACADDRESS	12 hexidecimal digits	Media Access Control (MAC) layer address. The Ethernet address, also known as the hardware physical address, obtained from stamping on the DBIC. This number must be unique and correspond to the number on the DBIC.
	IPADDR	4 digits, with each digit ranging from 0 to 255	IP Address The Internet Protocol (IP) address of the Star Hub line drawer. The default is 0 0 0 0.

Note 1: Changes to fields with multiple entries should be made in the PROMPT mode only. In nonprompt mode it is possible to leave out existing entries.

Note 2: Enter the continuation mark (+) in fields with multiple possible entries when more data is specified on the next line or more records will be entered. Enter the end mark ($) in fields with multiple possible entries after the last entry.

Datafill example for table LCMDRINV

The following example shows sample datafill for table LCMDRINV.

MAP display example for table LCMDRINV

```
TABLE LCMDRINV

LCMNM  DRWRTAB
_____________________________________________________________________
REM1 01 0
(0 NT6X54AA NT6X05AA) (1 NT6X54DA NT6X05DA ILDRAB07)
(2 NTEX54CA NT6X05AA EEFF00010203 0 0 0 0) (3 NT6X54AA
NT6X05AA) (4 NTEX54CA NT6X05AA FF0001020304 0 0 0 0)
(5 NT6X54AA NT6X05AA) (6 NT6X54AA NT6X05AA) (7 NT6X54AA
NT6X05AA) (8 NTTR70AA NTTR40AA 14 RDAA09A 2 DS1HUB 20
LAKE9) (9 NT6X54AA NT6X05AA) (10 NT6X54AA NT6X05AA) (11
NT6X54AA NT6X05AA) (12 NT6X54AA NT6X05AA) (13 NT6X54AA
NT6X05AA) (14 NT6X54AA NT6X05AA) (15 NT6X54AA NT6X05AA)
(16 NT6X54AA NT6X05AA) (17 NT6X54AA NT6X05AA)$
```

Error messages for table LCMDRINV

The following error messages apply to table LCMDRINV.

Error messages for table LCMDRINV

Error message	Explanation and action
`Tuple Addition occurs when the corresponding entry is added into the LCMINV table.`	An attempt was made to manually add a tuple entry into table LCMDRINV.
`Tuple Deletion occurs when the corresponding entry is deleted from the LCMINV table.`	An attempt was made to manually delete a tuple entry from table LCMDRINV.

Datafilling table LNINV

Table LNINV matches the site name from table SITE to each physical line circuit in the Star Hub. This table defines the LEN of a line and indicates the software location and its hardware characteristics. Each line card in the Star Hub has a tuple in table LNINV.

The subfields used to identify the line card are changed so a LEN can identify an LCM line card. In a LEN for an LCM, the fields for the LEN are defined as follows:

- SITE
- FRAME
- UNIT
- SUBGROUP
- CIRCUIT

Note the following table interactions:

- The line assignment for coin lines is made in table LENLINES. The LNATTIX field matches to the line class, code, coin first (CCF), coin dial tone first (CDF), or coin semi-postpay (CSP), in table LINEATTR.
- POTS lines LCMLSG do not have matching tuples in keyset-type tables.
- For Meridian business sets (MBS), the VARTYPE in table LCMINV must be NTPROP.

The following table shows the datafill related to HSTP0 DMS ADSL Capability for table LNINV. The table only lists those fields that apply directly to HSTP0 DMS ADSL Capability.

HSTP0 DMS ADSL Capability (continued)

For a description of the other fields, refer to the data schema section of this document.

Datafilling table LNINV (Sheet 1 of 2)

Field	Subfield or refinement	Entry	Explanation and action
LEN		alphanumeric	Line equipment number. This field contains the following subfields: SITE, FRAME, UNIT, SUBGROUP, and CIRCUIT.
	SITE	alphanumeric	Site. Enter the location of the Star Hub (four-character alphanumeric). This entry is not optional, and there is no default value assigned to it.
	FRAME	0 to 511	Frame. Enter the Star Hub frame number, which is not a physical frame but a software entity that represents the group the Star Hub belongs to at the site.
	UNIT	0 to 2	Unit. Enter the number representing the line drawer shelf in the Star Hub.
	SUBGROUP	0 to 35	Subgroup. Enter the number of subgroups in the line drawers.
	CIRCUIT	0 to 31	Circuit. Enter the number of circuits in the subgroups. The range is 0-31.
CARDCODE		EX17DA	Card code. Enter the PEC of the line card or line card carrier.
PADGRP		STDLN, UNBAL, PPHON, LRLM, NPDGP and ONS	Pad group. Enter the name of the pad group assigned to the line circuit in the pad data table. The values include STDLN, UNBAL, PPHON, LRLM, NPDGP, and ONS.
STATUS		HASU, WORKING, UNEQUIP, CUTOFF, and RESERVED.	Status. Enter the line inventory availability status. The values include HASU, WORKING, UNEQUIP, CUTOFF, and RESERVED.

HSTP0 DMS ADSL Capability (continued)

Datafilling table LNINV (Sheet 2 of 2)

Field	Subfield or refinement	Entry	Explanation and action
GND		Y *or* N	Ground. Where line is ground start, enter Y. Otherwise, enter N (for loop start).
BNV		L *or* NL	Balanced network value. Enter L when line circuit is configured for a loaded network. Otherwise, enter NL (for nonloaded network).
MNO		Y *or* N	Manual override. Enter Y when on-hook balance network test is to be prevented from updating field BNV in this table. Otherwise, enter N to allow off-hook balance network test to update field BNV in this table.
CARDINFO		NIL	Card information. The NIL value is the default. The values are NIL, SSLCC, or ISLCC.

Datafill example for table LNINV

The following example shows sample datafill for table LNINV.

MAP display example for table LNINV

```
   LEN      CARDCODE  PADGRP  STATUS GND BNV MNO CARDINFO
-------------------------------------------------------------
REM1  00 0 0  01  EX17DA  STDLN   HASU   N  NL  N  NIL
REM1  00 0 0  02  EX17DA  STDLN   HASU   N  NL  N  NIL
REM1  00 0 0  03  EX17DA  STDLN  WORKING N  NL  N  NIL
REM1  00 0 0  04  EX17DA  STDLN  WORKING N  NL  N  NIL
REM1  00 0 0  05  EX17DA  STDLN   HASU   N  NL  N  NIL
REM1  00 0 0  06  EX17DA  STDLN   HASU   N  NL  N  NIL
REM1  00 0 0  07  EX17DA  STDLN  WORKING N  NL  N  NIL
REM1  00 0 0  08  EX17DA  STDLN  WORKING N  NL  N  NIL
REM1  00 0 0  09  6X17DA  STDLN   HASU   N  NL  N  NIL
REM1  00 0 0  10  6X17DA  STDLN   HASU   Y  NL  N  NIL
REM1  00 0 5  00  6X17DA  STDLN   HASU   N  NL  N  NIL
REM1  00 0 5  01  6X17DA  STDLN   HASU   N  NL  N  NIL
```

HSTP0 DMS ADSL Capability (end)

Translation verification tools

HSTP0 DMS ADSL Capability tables LCMINV and LCMDRINV support 1-Meg Modem Service specific checks through the following table control commands:

```
>CHECK

>CHECK ALL
```

SERVORD

HSTP0 DMS ADSL Capability SERVORD rejects attempts to add the cut-off-on-disconnect (COD) to an xDSL line. Operation of the cut-off-relay interrupts data services on an xDSL line including the COD feature.

Index

A

A- and B-bit signaling Vol. 2, 5-3, Vol. 2, 6-3, Vol. 2, 7-5, Vol. 3, 3-5
AB bit signaling Vol. 3, 3-11
activating
  BAS RSC Vol. 1, 6-30
  CLASS features Vol. 2, 3-125, Vol. 2, 4-123
  CLASS-Call Setup Vol. 3, 4-111
  Custom Local Area Signaling Service Vol. 1, 6-117
  Dual Remote Cluster Controller Vol. 3, 4-190
  Dual Remote Cluster Controller (DRCC) Vol. 1, 6-143
  Emergency Stand-Alone Operation Vol. 1, 5-126
  ESA call processing Vol. 1, 3-115, Vol. 1, 4-97, Vol. 2, 7-133
  Firmware Downloading Vol. 1, 6-271
  firmware downloading Vol. 3, 4-275
  ISDN on RSC-S Vol. 3, 4-215
  Meridian Digital Centrex Basic Vol. 2, 3-149, Vol. 3, 5-119
  New Peripheral Maintenance Package Vol. 1, 6-241
  OPM Maintenance Vol. 1, 5-152
  Outside Plant Module Vol. 1, 3-97
  Remote Line Concentrating Module Vol. 1, 3-13, Vol. 1, 4-13, Vol. 1, 5-11
  RLCM Intracalling Vol. 1, 3-108, Vol. 1, 4-133, Vol. 1, 5-162
  RSC Enhanced ESA (Lines and Trunks) Vol. 3, 4-316
  RSC Enhanced ESA Lines and Trunks Vol. 1, 6-168
  RSC ESA lines Vol. 1, 6-178
  RSC Trunking Vol. 1, 6-252
  RSC-ESA Line and Trunks Vol. 1, 6-201
  RSC-ESA lines Vol. 3, 4-157
  RSC-ESA lines and trunks Vol. 3, 4-171
  RSC-S basic call processing Vol. 3, 4-39
  RSC-S dynamic trunks Vol. 3, 4-140
  RSC-S Enhanced ESA for ISDN (Lines and Trunks) Vol. 3, 4-344
  RSC-S Enhanced ESA for ISDN (Lines Only) Vol. 3, 4-331
  SCM SLC-96 Basic Vol. 2, 3-22
  Special Services for Subscriber Carrier Module Vol. 2, 3-151
  Special Services for Subscriber Carrier Module Remote Vol. 3, 5-99
  Star Remote Hub basic call processing Vol. 2, 7-26
  Subscriber Module SLC-96/Remote Vol. 3, 5-22
  Subscriber Module SLC-96/Remote Vol. 3, 4-290
  XPM-PLUS Basic Vol. 1, 6-279
ADSI Vol. 2, 5-3, Vol. 2, 5-10, Vol. 2, 6-3, Vol. 2, 6-11, Vol. 3, 3-5, Vol. 3, 3-21
ALMSC, table
  datafilling Vol. 1, 3-64, Vol. 1, 4-64, Vol. 1, 5-56, Vol. 1, 5-88, Vol. 1, 6-105, Vol. 2, 3-79, Vol. 2, 5-91, Vol. 2, 6-84, Vol. 2, 7-99, Vol. 3, 2-45, Vol. 3, 3-107, Vol. 3, 4-97, Vol. 3, 5-67
ALMSCGRP, table
  datafilling Vol. 1, 3-64, Vol. 1, 4-64, Vol. 1, 5-54, Vol. 1, 5-87, Vol. 1, 6-103, Vol. 2, 3-75, Vol. 2, 5-89, Vol. 2, 6-82, Vol. 2, 7-97, Vol. 3, 2-43, Vol. 3, 3-105, Vol. 3, 4-94, Vol. 3, 5-63

ALMSD, table
datafilling Vol. 1, 3-66, Vol. 1, 4-66, Vol. 1, 5-60, Vol. 1, 5-92, Vol. 1, 6-104, Vol. 2, 3-78, Vol. 2, 5-93, Vol. 2, 6-86, Vol. 2, 7-101, Vol. 3, 2-47, Vol. 3, 3-109, Vol. 3, 4-96, Vol. 3, 5-66
ALMSDGRP, table
datafilling Vol. 1, 3-65, Vol. 1, 4-65, Vol. 1, 5-58, Vol. 1, 5-90, Vol. 1, 6-102, Vol. 2, 3-76, Vol. 2, 5-90, Vol. 2, 6-83, Vol. 2, 7-100, Vol. 3, 2-44, Vol. 3, 3-106, Vol. 3, 4-95, Vol. 3, 5-65
AMAOPTS, table
datafilling Vol. 1, 6-117, Vol. 2, 3-125, Vol. 2, 4-123, Vol. 2, 5-177, Vol. 2, 6-157, Vol. 3, 2-114, Vol. 3, 3-195, Vol. 3, 4-111
Analog Display Services Interface Vol. 2, 5-3, Vol. 2, 5-10, Vol. 2, 6-3, Vol. 2, 6-11, Vol. 3, 3-5, Vol. 3, 3-21

B

batteries Vol. 1, 5-151
backup power supply Vol. 1, 5-151
strings Vol. 1, 5-151
battery charge controller Vol. 1, 5-151
battery control unit Vol. 1, 5-151
BCC Vol. 1, 5-151
BCU Vol. 1, 5-151
billing
BAS RSC Vol. 1, 6-30
CLASS features Vol. 2, 3-125, Vol. 2, 4-123
CLASS-Call Setup Vol. 3, 4-111
Custom Local Area Signaling Service Vol. 1, 6-117
Dual Remote Cluster Controller Vol. 3, 4-190
Dual Remote Cluster Controller (DRCC) Vol. 1, 6-158
Emergency Stand-Alone Operation Vol. 1, 5-127
ESA call processing Vol. 1, 3-116, Vol. 1, 4-97, Vol. 2, 7-133
Firmware Downloading Vol. 1, 6-271
firmware downloading Vol. 3, 4-275
ISDN on RSC-S Vol. 3, 4-215
Meridian Digital Centrex Basic Vol. 2, 3-149, Vol. 3, 5-119
New Peripheral Maintenance Package Vol. 1, 6-241
OPM Maintenance Vol. 1, 5-152
Outside Plant Module Vol. 1, 3-97
Remote Line Concentrating Module Vol. 1, 3-13, Vol. 1, 4-13, Vol. 1, 5-11
RLCM Intracalling Vol. 1, 3-108, Vol. 1, 4-133, Vol. 1, 5-162
RSC Enhanced ESA (Lines and Trunks) Vol. 3, 4-316
RSC Enhanced ESA Lines and Trunks Vol. 1, 6-168
RSC ESA lines Vol. 1, 6-179
RSC Trunking Vol. 1, 6-253
RSC-ESA Line and Trunks Vol. 1, 6-201
RSC-ESA lines Vol. 3, 4-157
RSC-ESA lines and trunks Vol. 3, 4-172
RSC-S basic call processing Vol. 3, 4-39
RSC-S dynamic trunks Vol. 3, 4-140
RSC-S Enhanced ESA for ISDN (Lines and Trunks) Vol. 3, 4-344
RSC-S Enhanced ESA for ISDN (Lines Only) Vol. 3, 4-331
SCM SLC-96 Basic Vol. 2, 3-22
Special Services for Subscriber Carrier Module Vol. 2, 3-151
Special Services for Subscriber Carrier Module Remote Vol. 3, 5-99
Star Remote Hub basic call processing Vol. 2, 7-26
Subscriber Module SLC-96/Remote Vol. 3, 5-22
Subscriber Module SLC-96/Remote Vol. 3, 4-290
XPM-PLUS Basic Vol. 1, 6-279

C

Call Forwarding Vol. 2, 5-44
Call processing
channel allocation Vol. 2, 5-31, Vol. 2, 5-32, Vol. 2, 5-34, Vol. 2, 5-35, Vol. 2, 6-30, Vol. 2, 6-31, Vol. 2, 6-33, Vol. 3, 3-43, Vol. 3, 3-44, Vol. 3, 3-46, Vol. 3, 3-47

coin operation Vol. 2, 5-38, Vol. 2, 6-36, Vol. 3, 3-49
coin collect Vol. 2, 5-38, Vol. 2, 6-36, Vol. 3, 3-50
coin partial presence Vol. 2, 5-39, Vol. 2, 6-37, Vol. 3, 3-50
coin presence Vol. 2, 5-38, Vol. 2, 6-37, Vol. 3, 3-50
coin return Vol. 2, 5-38, Vol. 2, 6-36, Vol. 3, 3-50
interactions Vol. 2, 5-39, Vol. 2, 6-37, Vol. 3, 3-51
limitations Vol. 2, 5-39, Vol. 2, 6-37, Vol. 3, 3-51
normal battery Vol. 2, 5-39, Vol. 2, 6-37, Vol. 3, 3-51
reverse battery Vol. 2, 5-39, Vol. 2, 6-37, Vol. 3, 3-50
loss padding Vol. 2, 5-36, Vol. 2, 6-35, Vol. 3, 3-48
origination Vol. 2, 5-31, Vol. 2, 5-32, Vol. 2, 5-34, Vol. 2, 5-35, Vol. 2, 6-30, Vol. 2, 6-31, Vol. 2, 6-33, Vol. 3, 3-43, Vol. 3, 3-44, Vol. 3, 3-46, Vol. 3, 3-47
ringing Vol. 2, 5-35, Vol. 2, 5-36, Vol. 2, 6-34, Vol. 3, 3-47, Vol. 3, 3-48
tone generation Vol. 2, 5-32, Vol. 2, 5-33, Vol. 2, 5-34, Vol. 2, 5-36, Vol. 2, 5-37, Vol. 2, 6-31, Vol. 2, 6-32, Vol. 2, 6-35, Vol. 3, 3-44, Vol. 3, 3-45, Vol. 3, 3-48, Vol. 3, 3-49
Call processing (IDT to RDT) Vol. 2, 5-34, Vol. 2, 6-33, Vol. 3, 3-46
alerting Vol. 2, 5-35, Vol. 2, 6-34, Vol. 3, 3-47
busy service of subscriber lines Vol. 2, 5-38, Vol. 2, 6-36, Vol. 3, 3-49
call disconnection Vol. 2, 5-37, Vol. 2, 6-35, Vol. 3, 3-48
channel selection Vol. 2, 5-35, Vol. 2, 6-33, Vol. 3, 3-47
flash detection Vol. 2, 5-37, Vol. 2, 6-35, Vol. 3, 3-49
loss padding Vol. 2, 5-36, Vol. 2, 6-35, Vol. 3, 3-48
network busy call treatment Vol. 2, 5-35, Vol. 2, 6-33, Vol. 3, 3-46
on#1e>hook transmission Vol. 2, 5-36, Vol. 2, 6-34, Vol. 3, 3-48
on-hook transmission
CLASS calling number delivery (CND) Vol. 2, 5-36, Vol. 2, 6-35, Vol. 3, 3-48
time slot request Vol. 2, 5-34, Vol. 2, 6-33, Vol. 3, 3-46
Call processing (RDT to IDT) Vol. 2, 5-31, Vol. 2, 6-30, Vol. 3, 3-43
busy service of subscriber lines Vol. 2, 5-34, Vol. 2, 6-33, Vol. 3, 3-46
channel selection Vol. 2, 5-32, Vol. 2, 6-31, Vol. 3, 3-44
disconnecting a call Vol. 2, 5-33, Vol. 2, 6-32, Vol. 3, 3-45
flash detection Vol. 2, 5-34, Vol. 2, 6-32, Vol. 3, 3-45
sending addressing information Vol. 2, 5-32, Vol. 2, 6-31, Vol. 3, 3-44
time slot request Vol. 2, 5-31, Vol. 2, 6-30, Vol. 3, 3-43
tone generation Vol. 2, 5-32, Vol. 2, 6-31, Vol. 3, 3-44
Call processing coin operation Vol. 2, 5-38, Vol. 2, 6-36, Vol. 3, 3-49
battery Vol. 2, 5-39, Vol. 2, 6-37, Vol. 3, 3-50
normal battery Vol. 2, 5-39, Vol. 2, 6-37, Vol. 3, 3-51
reverse battery Vol. 2, 5-39, Vol. 2, 6-37, Vol. 3, 3-50
coin commands Vol. 2, 5-38, Vol. 2, 6-36, Vol. 3, 3-49
coin collect Vol. 2, 5-38, Vol. 2, 5-39, Vol. 2, 6-36, Vol. 2, 6-37, Vol. 3, 3-50
coin presence Vol. 2, 5-38, Vol. 2, 6-37, Vol. 3, 3-50
coin return Vol. 2, 5-38, Vol. 2, 6-36, Vol. 3, 3-50
subscriber line signaling Vol. 2, 5-39, Vol. 2, 6-37, Vol. 3, 3-51
analog Vol. 2, 5-39, Vol. 2, 6-37, Vol. 3, 3-51
coin dial#1e>tone first Vol. 2, 5-41, Vol. 2, 6-39, Vol. 3, 3-53
coin first Vol. 2, 5-40, Vol. 2, 6-38, Vol. 3, 3-52
coin interactions Vol. 2, 5-39, Vol. 2, 6-37, Vol. 3, 3-51
coin operation limitations Vol. 2, 5-39, Vol. 2, 6-37, Vol. 3, 3-51
coin semi#1e>postpay Vol. 2, 5-42, Vol. 3, 3-53
metallic Vol. 2, 5-39, Vol. 2, 6-37, Vol. 3, 3-51

Call Waiting Vol. 2, 5-43
Cards
CMR Vol. 2, 5-45, Vol. 2, 6-40, Vol. 3, 3-56
CARRMTC, table
datafilling Vol. 1, 3-39, Vol. 1, 4-39, Vol. 1, 5-36, Vol. 1, 6-57, Vol. 2, 3-29, Vol. 2, 5-80, Vol. 2, 7-56, Vol. 3, 4-61, Vol. 3, 4-230, Vol. 3, 5-29
CILLI, table
datafilling Vol. 3, 5-25
CLASS Vol. 2, 5-45, Vol. 2, 6-40, Vol. 3, 3-56
CLLI , table
datafilling Vol. 3, 4-42
CLLI, table
datafilling Vol. 1, 3-22, Vol. 1, 4-22, Vol. 1, 5-21, Vol. 1, 6-38, Vol. 1, 6-203, Vol. 1, 6-254, Vol. 2, 3-25, Vol. 2, 5-67, Vol. 2, 7-31, Vol. 3, 4-218
CLLIMTCE, table
datafilling Vol. 1, 3-63, Vol. 1, 4-63, Vol. 1, 5-54, Vol. 1, 5-86, Vol. 2, 7-97
CND Vol. 2, 5-45, Vol. 2, 6-40, Vol. 3, 3-56
Coin Vol. 2, 5-31, Vol. 2, 5-40, Vol. 2, 6-30, Vol. 2, 6-38, Vol. 3, 3-43, Vol. 3, 3-52
call processing
coin commands Vol. 2, 5-38, Vol. 2, 6-36, Vol. 3, 3-49
coin collect Vol. 2, 5-38, Vol. 2, 6-36, Vol. 3, 3-50
coin first Vol. 2, 5-40, Vol. 2, 6-38, Vol. 3, 3-52
coin partial presence Vol. 2, 5-39, Vol. 2, 6-37, Vol. 3, 3-50
coin presence Vol. 2, 5-38, Vol. 2, 6-37, Vol. 3, 3-50
coin return Vol. 2, 5-38, Vol. 2, 6-36, Vol. 3, 3-50
dial tone first Vol. 2, 5-41, Vol. 2, 6-39, Vol. 3, 3-53
limitations and interactions Vol. 2, 5-39, Vol. 2, 6-37, Vol. 3, 3-51
normal battery Vol. 2, 5-39, Vol. 2, 6-37, Vol. 3, 3-51
operation Vol. 2, 5-38, Vol. 2, 6-36, Vol. 3, 3-49
reverse battery Vol. 2, 5-39, Vol. 2, 6-37, Vol. 3, 3-50
semi-postpay Vol. 2, 5-42, Vol. 3, 3-53
Coin service
types Vol. 2, 5-40, Vol. 2, 6-38, Vol. 3, 3-52
Coin services
coin
coin first Vol. 2, 5-40, Vol. 2, 6-38, Vol. 3, 3-52
dial tone first Vol. 2, 5-41, Vol. 2, 6-39, Vol. 3, 3-53
coin services
coin
semi#1e>postpay Vol. 2, 5-42, Vol. 3, 3-53
Communication protocol Vol. 2, 7-10
Communication protocols Vol. 2, 6-16
Compact peripheral module Vol. 3, 3-2
CPM Vol. 3, 3-2
CSC Vol. 2, 5-32, Vol. 2, 5-34, Vol. 3, 3-43, Vol. 3, 3-46
LAPD Vol. 2, 5-14, Vol. 3, 3-25
message descriptions
alerting Vol. 2, 5-22, Vol. 3, 3-34
disconnect Vol. 2, 5-23, Vol. 3, 3-35
notify Vol. 2, 5-23, Vol. 3, 3-35
setup acknowledge Vol. 2, 5-23, Vol. 3, 3-35
path protection Vol. 2, 5-6, Vol. 2, 5-7, Vol. 2, 6-9, Vol. 3, 3-17, Vol. 3, 3-18
Q.921 Vol. 2, 5-14, Vol. 3, 3-25
Q.931 Vol. 2, 5-14, Vol. 3, 3-25
CUSTHEAD (MDC only), table
datafilling Vol. 1, 6-221
CUSTHEAD table
datafilling Vol. 3, 4-179
CUSTHEAD, table
DATAFILLING Vol. 3, 4-351
datafilling Vol. 1, 3-136, Vol. 1, 4-117, Vol. 1, 5-148, Vol. 1, 6-191, Vol. 2, 7-149, Vol. 3, 4-164, Vol. 3, 4-323, Vol. 3, 4-337
Custom calling Vol. 2, 5-43

D

data tables
overview Vol. 1, 2-1, Vol. 2, 2-1, Vol. 3, 2-1
structure
illustration Vol. 1, 2-2, Vol. 2, 2-2, Vol. 3, 2-2
Data-enhanced bus interface card
protocol Vol. 2, 7-16

Datafill sequence
Subscriber Carrier Module-100 Access Vol. 2, 5-63
datafill sequence
BAS RSC Vol. 1, 6-31
CLASS features Vol. 2, 3-127, Vol. 2, 4-125
CLASS-Call Setup Vol. 3, 4-113
Custom Local Area Signaling Service Vol. 1, 6-119
Dual Remote Cluster Controller Vol. 3, 4-191
Dual Remote Cluster Controller (DRCC) Vol. 1, 6-158
Emergency Stand-Alone Operation Vol. 1, 5-133
ESA call processing Vol. 1, 3-122, Vol. 1, 4-104, Vol. 2, 7-139
Firmware Downloading Vol. 1, 6-272
firmware downloading Vol. 3, 4-276
ISDN on RSC-S Vol. 3, 4-215
Meridian Digital Centrex Basic Vol. 2, 3-149, Vol. 3, 5-119
New Peripheral Maintenance Package Vol. 1, 6-241
OPM Maintenance Vol. 1, 5-158
Outside Plant Module Vol. 1, 3-102
Remote Line Concentrating Module Vol. 1, 3-18, Vol. 1, 4-18, Vol. 1, 5-16
RLCM Intracalling Vol. 1, 3-108, Vol. 1, 4-133, Vol. 1, 5-163
RSC Enhanced ESA (Lines and Trunks) Vol. 3, 4-317
RSC Enhanced ESA Lines and Trunks Vol. 1, 6-169
RSC ESA lines Vol. 1, 6-183
RSC Trunking Vol. 1, 6-253
RSC-ESA Line and Trunks Vol. 1, 6-202
RSC-ESA lines Vol. 3, 4-157
RSC-ESA lines and trunks Vol. 3, 4-172
RSC-S basic call processing Vol. 3, 4-40
RSC-S dynamic trunks Vol. 3, 4-140
RSC-S Enhanced ESA for ISDN (Lines and Trunks) Vol. 3, 4-345
RSC-S Enhanced ESA for ISDN (Lines Only) Vol. 3, 4-332
SCM SLC-96 Basic Vol. 2, 3-22
Special Services for Subscriber Carrier Module Vol. 2, 3-151
Special Services for Subscriber Carrier Module Remote Vol. 3, 5-100
Star Remote Hub basic call processing Vol. 2, 7-27
Subscriber Module SLC-96/Remote Vol. 3, 5-22
Subscriber Module SLC-96/Remote Vol. 3, 4-291
XPM-PLUS Basic Vol. 1, 6-279
datafilling
nonprompting mode Vol. 1, 2-4, Vol. 2, 2-4, Vol. 3, 2-4
procedures Vol. 1, 2-3, Vol. 2, 2-3, Vol. 3, 2-3
prompts and prompting mode Vol. 1, 2-3, Vol. 2, 2-3, Vol. 3, 2-3
DATASIZE, table
datafilling Vol. 1, 3-21, Vol. 1, 4-22, Vol. 1, 5-21, Vol. 2, 7-31, Vol. 3, 4-218
DCHINV, table
datafilling Vol. 2, 5-95, Vol. 3, 4-246
deactivating
BAS RSC Vol. 1, 6-30
CLASS features Vol. 2, 3-125, Vol. 2, 4-123
CLASS-Call Setup Vol. 3, 4-111
Custom Local Area Signaling Service Vol. 1, 6-117
Dual Remote Cluster Controller Vol. 3, 4-190
Dual Remote Cluster Controller (DRCC) Vol. 1, 6-143
Emergency Stand-Alone Operation Vol. 1, 5-126
ESA call processing Vol. 1, 3-115, Vol. 1, 4-97, Vol. 2, 7-133
Firmware Downloading Vol. 1, 6-271
firmware downloading Vol. 3, 4-275
ISDN on RSC-S Vol. 3, 4-215
Meridian Digital Centrex Basic Vol. 2, 3-149, Vol. 3, 5-119
OPM Maintenance Vol. 1, 5-152
Outside Plant Module Vol. 1, 3-97
Remote Line Concentrating Module Vol. 1, 3-13, Vol. 1, 4-13, Vol. 1, 5-11
RLCM Intracalling Vol. 1, 3-108, Vol. 1, 4-133, Vol. 1, 5-162

RSC Enhanced ESA (Lines and Trunks) Vol. 3, 4-316
RSC Enhanced ESA Lines and Trunks Vol. 1, 6-168
RSC ESA lines Vol. 1, 6-178
RSC Trunking Vol. 1, 6-252
RSC-ESA Line and Trunks Vol. 1, 6-201
RSC-ESA lines Vol. 3, 4-157
RSC-ESA lines and trunks Vol. 3, 4-171
RSC-S basic call processing Vol. 3, 4-39
RSC-S dynamic trunks Vol. 3, 4-140
RSC-S Enhanced ESA for ISDN (Lines and Trunks) Vol. 3, 4-344
RSC-S Enhanced ESA for ISDN (Lines Only) Vol. 3, 4-331
SCM SLC-96 Basic Vol. 2, 3-22
Special Services for Subscriber Carrier Module Vol. 2, 3-151
Special Services for Subscriber Carrier Module Remote Vol. 3, 5-99
Star Remote Hub basic call processing Vol. 2, 7-26
Subscriber Module SLC-96/Remote Vol. 3, 5-22
Subscriber Module SLC-96/Remote Vol. 3, 4-290
XPM-PLUS Basic Vol. 1, 6-279
Description
Subscriber Carrier Module-100 Access Vol. 2, 5-60
description
BAS RSC Vol. 1, 6-14
CLASS features Vol. 2, 3-121, Vol. 2, 4-121
CLASS-Call Setup Vol. 3, 4-109
Custom Local Area Signaling Service Vol. 1, 6-114
Dual Remote Cluster Controller Vol. 3, 4-185
Dual Remote Cluster Controller (DRCC) Vol. 1, 6-140
Emergency Stand-Alone Operation Vol. 1, 5-124
ESA call processing Vol. 1, 3-112, Vol. 1, 4-94, Vol. 2, 7-129
Firmware Downloading Vol. 1, 6-267
firmware downloading Vol. 3, 4-271
ISDN on RSC-S Vol. 3, 4-201
Meridian Digital Centrex Basic Vol. 2, 3-148, Vol. 3, 5-117
New Peripheral Maintenance Package Vol. 1, 6-236
OPM Maintenance Vol. 1, 5-150
Outside Plant Module Vol. 1, 3-95
Remote Line Concentrating Module Vol. 1, 3-11, Vol. 1, 4-11, Vol. 1, 5-10
RLCM Intracalling Vol. 1, 3-106, Vol. 1, 4-131, Vol. 1, 5-161
RSC Enhanced ESA (Lines and Trunks) Vol. 3, 4-311
RSC Enhanced ESA Lines and Trunks Vol. 1, 6-164
RSC ESA lines Vol. 1, 6-175
RSC Trunking Vol. 1, 6-246
RSC-ESA Line and Trunks Vol. 1, 6-193
RSC-ESA lines Vol. 3, 4-149
RSC-ESA lines and trunks Vol. 3, 4-166
RSC-S basic call processing Vol. 3, 4-22
RSC-S dynamic trunks Vol. 3, 4-135
RSC-S Enhanced ESA for ISDN (Lines and Trunks) Vol. 3, 4-339
RSC-S Enhanced ESA for ISDN (Lines Only) Vol. 3, 4-328
SCM SLC-96 Basic Vol. 2, 3-19
Special Services for Subscriber Carrier Module Vol. 2, 3-150
Special Services for Subscriber Carrier Module Remote Vol. 3, 5-98
Star Remote Hub basic call processing Vol. 2, 7-20
Subscriber Module SLC-96/Remote Vol. 3, 5-21
Subscriber Module SLC-96/Remote Vol. 3, 4-288
XPM-PLUS Basic Vol. 1, 6-278
DFINV, table
datafilling Vol. 1, 3-67, Vol. 1, 4-67, Vol. 1, 5-62, Vol. 1, 5-93, Vol. 2, 7-102
Dial pulse Vol. 2, 5-49, Vol. 2, 6-43, Vol. 3, 3-60
Dialing Vol. 2, 5-49, Vol. 2, 6-43, Vol. 3, 3-60
dial pulse Vol. 2, 5-49, Vol. 2, 6-43, Vol. 3, 3-60
DTMF Vol. 2, 5-49, Vol. 2, 6-43, Vol. 3, 3-60
Direct outward dialing
PBX
DOD Vol. 2, 5-47, Vol. 2, 6-41, Vol. 3, 3-58

DMS-X handshaking protocol
illustration Vol. 1, 3-4, Vol. 1, 4-4
DMS-X message format
illustration Vol. 1, 3-5, Vol. 1, 4-5
DNROUTE, table
datafilling Vol. 1, 3-78, Vol. 1, 4-78, Vol. 1, 5-70, Vol. 1, 5-102, Vol. 2, 7-113
DS-1 Vol. 3, 3-45
facilities Vol. 2, 5-6, Vol. 2, 5-7, Vol. 2, 6-8, Vol. 3, 3-16, Vol. 3, 3-17, Vol. 3, 3-18
frame Vol. 2, 5-6, Vol. 3, 3-17
frame format Vol. 2, 5-3, Vol. 2, 6-3, Vol. 2, 7-5, Vol. 3, 3-5
lines Vol. 2, 5-3, Vol. 2, 6-3, Vol. 2, 7-5, Vol. 3, 3-5
DS#1e>1 Vol. 2, 5-33, Vol. 2, 6-32
facilities Vol. 2, 6-9
DSCWDTYP, table
datafilling Vol. 1, 6-133, Vol. 2, 3-133, Vol. 2, 4-131, Vol. 2, 5-183, Vol. 2, 6-164, Vol. 3, 2-119, Vol. 3, 3-202, Vol. 3, 4-120
Dual-tone multifrequency Vol. 2, 5-32, Vol. 2, 5-49, Vol. 2, 6-31, Vol. 2, 6-43, Vol. 3, 3-44, Vol. 3, 3-60

E

Electronic Business Set Vol. 2, 5-43
Embedded Operations Channel Vol. 2, 5-14, Vol. 2, 6-16, Vol. 3, 3-25
Enhanced 800/Service switching point Vol. 2, 5-48, Vol. 2, 6-41, Vol. 3, 3-58
environmental control equipment Vol. 1, 5-151
EOC
applications router Vol. 2, 5-24, Vol. 2, 5-27, Vol. 2, 6-23, Vol. 2, 6-26, Vol. 3, 3-36, Vol. 3, 3-39
communication protocol
functional areas Vol. 2, 5-25, Vol. 2, 6-24, Vol. 3, 3-37
LAPD Vol. 2, 5-14, Vol. 2, 6-16, Vol. 3, 3-25
message signaling Vol. 2, 5-7, Vol. 2, 6-9, Vol. 3, 3-18
operation entities Vol. 2, 5-24, Vol. 2, 5-27, Vol. 2, 6-23, Vol. 2, 6-26, Vol. 3, 3-36, Vol. 3, 3-39
protocol stack Vol. 2, 5-24, Vol. 2, 5-27, Vol. 2, 6-23, Vol. 2, 6-25, Vol. 3, 3-36, Vol. 3, 3-38
Q.921 Vol. 2, 5-14, Vol. 2, 6-16, Vol. 3, 3-25
ESAHNPA table
datafilling Vol. 3, 4-182
ESAHNPA, table
DATAFILLING Vol. 3, 4-352
datafilling Vol. 1, 6-219, Vol. 3, 4-325
ESAPXLA table
datafilling Vol. 3, 4-176
ESAPXLA, table
DATAFILLING Vol. 3, 4-349
datafilling Vol. 1, 3-126, Vol. 1, 4-107, Vol. 1, 5-137, Vol. 1, 6-185, Vol. 1, 6-216, Vol. 2, 7-141, Vol. 3, 4-161, Vol. 3, 4-320, Vol. 3, 4-335
ESARTE table
datafilling Vol. 3, 4-182
ESARTE, table
datafilling Vol. 1, 6-215, Vol. 3, 4-325
ESF Vol. 2, 5-4, Vol. 2, 6-4, Vol. 2, 7-7, Vol. 3, 3-8
CRC Vol. 2, 5-4, Vol. 2, 6-4, Vol. 2, 7-8, Vol. 3, 3-8
FDL Vol. 2, 5-4, Vol. 2, 6-4, Vol. 2, 7-7, Vol. 3, 3-8
FPS Vol. 2, 5-4, Vol. 2, 6-4, Vol. 2, 7-7, Vol. 3, 3-8
Essential Line Services
Residential
ELS Vol. 2, 5-47, Vol. 2, 6-41, Vol. 3, 3-58
Expanded Subscriber Carrier Module-100 Access
automatic maintenance
path protection switching Vol. 3, 3-24
description
coin call messages Vol. 3, 3-54
Meridian business set (MBS) messaging Vol. 3, 3-54
protocol
DS30 Vol. 3, 3-25
EOC Vol. 3, 3-25
Q.921 Vol. 3, 3-25
Q.931 Vol. 3, 3-25
protocols
DS30 Vol. 3, 3-39
signaling
DS30 protocol Vol. 3, 3-41
SMA system
description Vol. 3, 3-3

Expanded Subscriber Carrier Module-100 Access (ESMA)
operation Vol. 3, 3-71
Extended superframe format (ESF) signaling Vol. 2, 5-3, Vol. 2, 7-7

F

Feature package
NTX146AA Vol. 1, 5-10
NTX147AB Vol. 1, 3-95, Vol. 1, 5-150
NTX154AA Vol. 1, 3-112, Vol. 1, 4-94, Vol. 1, 5-124
NTX156AA Vol. 1, 3-106, Vol. 1, 4-131, Vol. 1, 5-161
NTX387AC Vol. 2, 4-24
NTX387AD Vol. 2, 4-24
NTXF46AA Vol. 3, 3-70
NTXS02AA Vol. 2, 6-51
NTXT23AA Vol. 3, 2-7
feature package
NTX621AB Vol. 2, 4-142
Frame format
DS-1 Vol. 2, 5-3, Vol. 2, 6-3, Vol. 2, 7-5, Vol. 3, 3-5
Functional group
BAS00012 Vol. 1, 5-10, Vol. 1, 5-124, Vol. 1, 5-150, Vol. 1, 5-161
BAS0003 Vol. 3, 3-70
SMA00001 Vol. 2, 6-51, Vol. 3, 2-7
functional group
BAS00016 Vol. 2, 4-24, Vol. 2, 4-142
FXS signaling Vol. 3, 3-10

H

HNPACONT.HNPACODE, subtable
datafilling Vol. 1, 5-71, Vol. 1, 5-103
HNPACONT.HNPACODE, table
datafilling Vol. 1, 3-79, Vol. 1, 4-79, Vol. 2, 7-114
HUNTGRP, table
datafilling Vol. 1, 3-73, Vol. 1, 4-73, Vol. 2, 7-108
HUNTMEM, table
datafilling Vol. 1, 3-78, Vol. 1, 4-78, Vol. 2, 7-113

I

ICB
signaling
FXS Vol. 3, 3-10
IDT Vol. 2, 5-12, Vol. 2, 5-32, Vol. 2, 5-33, Vol. 2, 5-35, Vol. 2, 5-36, Vol. 2, 5-37, Vol. 2, 6-14, Vol. 2, 6-31, Vol. 2, 6-32, Vol. 2, 6-33, Vol. 2, 6-34, Vol. 2, 6-35, Vol. 3, 3-23, Vol. 3, 3-44, Vol. 3, 3-45, Vol. 3, 3-47, Vol. 3, 3-48
Interactions
Subscriber Carrier Module-100 Access Vol. 2, 5-62
interactions
BAS RSC Vol. 1, 6-30
CLASS features Vol. 2, 3-125, Vol. 2, 4-123
CLASS-Call Setup Vol. 3, 4-111
Custom Local Area Signaling Service Vol. 1, 6-117
Dual Remote Cluster Controller Vol. 3, 4-190
Dual Remote Cluster Controller (DRCC) Vol. 1, 6-143
Emergency Stand-Alone Operation Vol. 1, 5-126
ESA call processing Vol. 1, 3-115, Vol. 1, 4-97, Vol. 2, 7-132
Firmware Downloading Vol. 1, 6-271
firmware downloading Vol. 3, 4-275
ISDN on RSC-S Vol. 3, 4-215
Meridian Digital Centrex Basic Vol. 2, 3-149, Vol. 3, 5-119
New Peripheral Maintenance Package Vol. 1, 6-241
OPM Maintenance Vol. 1, 5-152
Outside Plant Module Vol. 1, 3-97
Remote Line Concentrating Module Vol. 1, 3-12, Vol. 1, 4-12, Vol. 1, 5-11
RLCM Intracalling Vol. 1, 3-107, Vol. 1, 4-132, Vol. 1, 5-162
RSC Enhanced ESA (Lines and Trunks) Vol. 3, 4-316
RSC Enhanced ESA Lines and Trunks Vol. 1, 6-168
RSC ESA lines Vol. 1, 6-178
RSC Trunking Vol. 1, 6-252
RSC-ESA Line and Trunks Vol. 1, 6-201

RSC-ESA lines Vol. 3, 4-156
RSC-ESA lines and trunks Vol. 3, 4-171
RSC-S basic call processing Vol. 3, 4-39
RSC-S dynamic trunks Vol. 3, 4-140
RSC-S Enhanced ESA for ISDN (Lines and Trunks) Vol. 3, 4-344
RSC-S Enhanced ESA for ISDN (Lines Only) Vol. 3, 4-331
SCM SLC-96 Basic Vol. 2, 3-22
Special Services for Subscriber Carrier Module Vol. 2, 3-151
Special Services for Subscriber Carrier Module Remote Vol. 3, 5-99
Star Remote Hub basic call processing Vol. 2, 7-26
Subscriber Module SLC-96/Remote Vol. 3, 5-22
Subscriber Module SLC-96/Remote Vol. 3, 4-290
XPM-PLUS Basic Vol. 1, 6-279
IRLNKINV, table
datafilling Vol. 1, 6-160, Vol. 1, 6-171, Vol. 3, 4-196
ISGDEF, table
datafilling Vol. 2, 5-97, Vol. 2, 7-77, Vol. 3, 4-247
ISTRKGRP table
datafilling Vol. 3, 4-181
ISTRKGRP, table
datafilling Vol. 1, 6-209, Vol. 1, 6-261, Vol. 3, 4-147, Vol. 3, 4-324

K

KSETFEAT, table
datafilling Vol. 3, 4-263
KSETINV, table
datafilling Vol. 3, 4-259
KSETLINE, table
datafilling Vol. 3, 4-261

L

LAPD Vol. 2, 5-14, Vol. 2, 6-16, Vol. 2, 7-10, Vol. 3, 3-25
CSC Vol. 2, 5-14, Vol. 3, 3-25
EOC Vol. 2, 5-14, Vol. 2, 6-16, Vol. 3, 3-25
TMC Vol. 2, 6-16, Vol. 3, 3-25
LCASCRCN.LCASCR, subtable
datafilling Vol. 1, 5-45
LCASCRCN.LCASCR, table
datafilling Vol. 1, 3-55, Vol. 1, 4-55, Vol. 2, 7-87
LCMINV, table
datafilling Vol. 1, 3-45, Vol. 1, 3-108, Vol. 1, 3-123, Vol. 1, 4-45, Vol. 1, 4-104, Vol. 1, 4-133, Vol. 1, 5-40, Vol. 1, 5-134, Vol. 1, 5-163, Vol. 1, 6-82, Vol. 2, 7-62, Vol. 2, 7-69, Vol. 2, 7-140, Vol. 3, 4-79, Vol. 3, 4-244
LENFEAT, table
datafilling Vol. 1, 3-77, Vol. 1, 4-77, Vol. 2, 3-95, Vol. 2, 7-112
LENLINES, table
datafilling Vol. 1, 3-74, Vol. 1, 4-74, Vol. 2, 3-91, Vol. 2, 7-109
Limitations
Subscriber Carrier Module-100 Access Vol. 2, 5-62
limitations
BAS RSC Vol. 1, 6-30
CLASS features Vol. 2, 3-123, Vol. 2, 4-122
CLASS-Call Setup Vol. 3, 4-110
Custom Local Area Signaling Service Vol. 1, 6-116
Dual Remote Cluster Controller Vol. 3, 4-188
Dual Remote Cluster Controller (DRCC) Vol. 1, 6-142
Emergency Stand-Alone Operation Vol. 1, 5-126
ESA call processing Vol. 1, 3-115, Vol. 1, 4-96, Vol. 2, 7-131
Firmware Downloading Vol. 1, 6-271
firmware downloading Vol. 3, 4-275
ISDN on RSC-S Vol. 3, 4-215
Meridian Digital Centrex Basic Vol. 2, 3-148, Vol. 3, 5-118
New Peripheral Maintenance Package Vol. 1, 6-241
OPM Maintenance Vol. 1, 5-152
Outside Plant Module Vol. 1, 3-97
Remote Line Concentrating Module Vol. 1, 3-12, Vol. 1, 4-12, Vol. 1, 5-10

RLCM Intracalling Vol. 1, 3-107, Vol. 1, 4-132, Vol. 1, 5-162
RSC Enhanced ESA (Lines and Trunks) Vol. 3, 4-315
RSC Enhanced ESA Lines and Trunks Vol. 1, 6-167
RSC ESA lines Vol. 1, 6-178
RSC Trunking Vol. 1, 6-252
RSC-ESA Line and Trunks Vol. 1, 6-200
RSC-ESA lines Vol. 3, 4-156
RSC-ESA lines and trunks Vol. 3, 4-171
RSC-S basic call processing Vol. 3, 4-39
RSC-S dynamic trunks Vol. 3, 4-139
RSC-S Enhanced ESA for ISDN (Lines and Trunks) Vol. 3, 4-344
RSC-S Enhanced ESA for ISDN (Lines Only) Vol. 3, 4-330
SCM SLC-96 Basic Vol. 2, 3-21
Special Services for Subscriber Carrier Module Vol. 2, 3-151
Special Services for Subscriber Carrier Module Remote Vol. 3, 5-99
Star Remote Hub basic call processing Vol. 2, 7-22
Subscriber Module SLC-96/Remote Vol. 3, 5-21
Subscriber Module SLC-96/Remote Vol. 3, 4-290
XPM-PLUS Basic Vol. 1, 6-279
LINEATTR, table
datafilling Vol. 1, 3-70, Vol. 1, 4-70, Vol. 1, 5-65, Vol. 1, 5-97, Vol. 2, 5-142, Vol. 2, 7-103
Link access procedure on the D#1e>channel Vol. 2, 5-14, Vol. 2, 6-16, Vol. 3, 3-25
LNINV, table
datafilling Vol. 1, 3-71, Vol. 1, 4-71, Vol. 1, 5-66, Vol. 1, 5-98, Vol. 2, 3-84, Vol. 2, 3-151, Vol. 2, 5-146, Vol. 2, 7-105, Vol. 3, 3-166, Vol. 3, 4-86, Vol. 3, 4-252, Vol. 3, 5-71, Vol. 3, 5-100
Loss padding Vol. 2, 5-36, Vol. 2, 6-35, Vol. 3, 3-48
LTCINV, table
datafilling Vol. 1, 3-31, Vol. 1, 4-32, Vol. 1, 5-30, Vol. 1, 6-53, Vol. 1, 6-242, Vol. 1, 6-274, Vol. 2, 3-45, Vol. 2, 3-127, Vol. 2, 4-126, Vol. 2, 5-75, Vol. 2, 7-39, Vol. 3, 4-56, Vol. 3, 4-225, Vol. 3, 4-282, Vol. 3, 4-298
LTCPSINV, table
datafilling Vol. 1, 3-36, Vol. 1, 4-36, Vol. 1, 5-34, Vol. 1, 6-62, Vol. 2, 3-51, Vol. 2, 5-87, Vol. 2, 7-44, Vol. 3, 4-66, Vol. 3, 4-232
LTCRINV, table
datafilling Vol. 3, 4-304, Vol. 3, 5-40
LTCRPINV, table
datafilling Vol. 3, 5-44
LTDEF, table
datafilling Vol. 2, 4-81, Vol. 2, 5-100, Vol. 2, 7-81, Vol. 3, 4-254
LTDSD, table
datafilling Vol. 2, 5-166
LTGRP, table
datafilling Vol. 2, 5-99, Vol. 2, 7-80, Vol. 3, 4-251
LTMAP, table
datafilling Vol. 3, 4-262

M

MADN
extension bridging Vol. 2, 5-46, Vol. 3, 3-57
multi-bridged arrangement Vol. 2, 5-46, Vol. 3, 3-56
multi-call arrangement Vol. 2, 5-46, Vol. 3, 3-56
single bridged arrangement Vol. 2, 5-46, Vol. 3, 3-57
single call arrangement Vol. 2, 5-46, Vol. 3, 3-56
MBS on AccessNode Vol. 3, 3-55
MBS on MVI RDT Vol. 3, 3-55
MDC Vol. 2, 5-35, Vol. 2, 5-45, Vol. 2, 5-47, Vol. 2, 6-34, Vol. 2, 6-40, Vol. 3, 3-47, Vol. 3, 3-56, Vol. 3, 3-57
Media access control address
Ethernet support Vol. 2, 7-16
Meridian business set (MBS)
messaging Vol. 2, 5-44, Vol. 3, 3-54
Meridian Digital Centrex Vol. 2, 5-35, Vol. 2, 5-45, Vol. 2, 6-34, Vol. 2, 6-40, Vol. 3, 3-47, Vol. 3, 3-56

Residential
MDC Vol. 2, 5-47, Vol. 2, 6-41, Vol. 3, 3-58
MTAHORIZ, table
datafilling Vol. 1, 3-84, Vol. 1, 4-84, Vol. 1, 5-75, Vol. 1, 5-109, Vol. 1, 6-99, Vol. 2, 3-102, Vol. 2, 5-173, Vol. 2, 7-118, Vol. 3, 4-103, Vol. 3, 5-83
MTAMDRVE, table
datafilling Vol. 1, 3-80, Vol. 1, 4-80, Vol. 1, 5-72, Vol. 1, 5-104, Vol. 1, 6-94, Vol. 2, 3-97, Vol. 2, 5-168, Vol. 2, 7-115, Vol. 3, 4-99, Vol. 3, 5-78
MTAVERT, table
datafilling Vol. 1, 3-84, Vol. 1, 4-84, Vol. 1, 5-74, Vol. 1, 5-108, Vol. 1, 6-97, Vol. 2, 3-100, Vol. 2, 5-171, Vol. 2, 7-117, Vol. 3, 4-102, Vol. 3, 5-81
Multiple Appearance Directory Number
MADN
off#1e>premise extension Vol. 2, 5-47, Vol. 2, 6-40, Vol. 3, 3-57
Multiple Appearance Directory Number (MADN) Vol. 2, 5-46, Vol. 3, 3-56
Multi-vendor interface Vol. 3, 3-5
MVI Vol. 3, 3-1, Vol. 3, 3-5
TMC message signaling Vol. 2, 6-8, Vol. 3, 3-16

N

NUMDIGS, table
datafilling Vol. 2, 7-104

O

OFCENG, table
datafilling Vol. 1, 6-37
OFCVAR, table
datafilling Vol. 1, 6-33
Office parameters
Subscriber Carrier Module-100 Access Vol. 2, 5-63
office parameters
BAS RSC Vol. 1, 6-31
CLASS features Vol. 2, 3-126, Vol. 2, 4-125
CLASS-Call Setup Vol. 3, 4-113
Custom Local Area Signaling Service Vol. 1, 6-119
Dual Remote Cluster Controller Vol. 3, 4-191
Dual Remote Cluster Controller (DRCC) Vol. 1, 6-158
Emergency Stand-Alone Operation Vol. 1, 5-127
ESA call processing Vol. 1, 3-116, Vol. 1, 4-97, Vol. 2, 7-133
Firmware Downloading Vol. 1, 6-271
firmware downloading Vol. 3, 4-275
ISDN on RSC-S Vol. 3, 4-215
Meridian Digital Centrex Basic Vol. 2, 3-149, Vol. 3, 5-119
New Peripheral Maintenance Package Vol. 1, 6-241
OPM Maintenance Vol. 1, 5-153
Outside Plant Module Vol. 1, 3-98
Remote Line Concentrating Module Vol. 1, 3-13, Vol. 1, 4-13, Vol. 1, 5-11
RLCM Intracalling Vol. 1, 3-108, Vol. 1, 4-133, Vol. 1, 5-163
RSC Enhanced ESA (Lines and Trunks) Vol. 3, 4-316
RSC Enhanced ESA Lines and Trunks Vol. 1, 6-169
RSC ESA lines Vol. 1, 6-179
RSC Trunking Vol. 1, 6-253
RSC-ESA Line and Trunks Vol. 1, 6-201
RSC-ESA lines Vol. 3, 4-157
RSC-ESA lines and trunks Vol. 3, 4-172
RSC-S basic call processing Vol. 3, 4-39
RSC-S dynamic trunks Vol. 3, 4-140
RSC-S Enhanced ESA for ISDN (Lines and Trunks) Vol. 3, 4-345
RSC-S Enhanced ESA for ISDN (Lines Only) Vol. 3, 4-331
SCM SLC-96 Basic Vol. 2, 3-22
Special Services for Subscriber Carrier Module Vol. 2, 3-151
Special Services for Subscriber Carrier Module Remote Vol. 3, 5-99
Star Remote Hub basic call processing Vol. 2, 7-26
Subscriber Module SLC-96/Remote Vol. 3, 5-22

Subscriber Module SLC-96/Remote Vol. 3, 4-290
XPM-PLUS Basic Vol. 1, 6-279
Operation
Expanded Subscriber Carrier Module-100 Access (ESMA) Vol. 3, 3-71
Subscriber Carrier Module-100 Access Vol. 2, 5-61
operation
BAS RSC Vol. 1, 6-16
CLASS features Vol. 2, 3-122, Vol. 2, 4-121
CLASS-Call Setup Vol. 3, 4-109
Custom Local Area Signaling Service Vol. 1, 6-115
Dual Remote Cluster Controller Vol. 3, 4-187
Dual Remote Cluster Controller (DRCC) Vol. 1, 6-142
Emergency Stand-Alone Operation Vol. 1, 5-125
ESA call processing Vol. 1, 3-113, Vol. 1, 4-94, Vol. 2, 7-129
Firmware Downloading Vol. 1, 6-270
firmware downloading Vol. 3, 4-271
ISDN on RSC-S Vol. 3, 4-204
Meridian Digital Centrex Basic Vol. 2, 3-148, Vol. 3, 5-117
OPM Maintenance Vol. 1, 5-150
Outside Plant Module Vol. 1, 3-96
Remote Line Concentrating Module Vol. 1, 3-11, Vol. 1, 4-11, Vol. 1, 5-10
RLCM Intracalling Vol. 1, 3-106, Vol. 1, 4-131, Vol. 1, 5-161
RSC Enhanced ESA (Lines and Trunks) Vol. 3, 4-312
RSC Enhanced ESA Lines and Trunks Vol. 1, 6-166
RSC ESA lines Vol. 1, 6-176
RSC Trunking Vol. 1, 6-249
RSC-ESA lines Vol. 3, 4-154
RSC-ESA lines and trunks Vol. 3, 4-169
RSC-S basic call processing Vol. 3, 4-25
RSC-S dynamic trunks Vol. 3, 4-138
RSC-S Enhanced ESA for ISDN (Lines and Trunks) Vol. 3, 4-340
RSC-S Enhanced ESA for ISDN (Lines Only) Vol. 3, 4-329
SCM SLC-96 Basic Vol. 2, 3-20
Special Services for Subscriber Carrier Module Vol. 2, 3-150
Special Services for Subscriber Carrier Module Remote Vol. 3, 5-98
Star Remote Hub basic call processing Vol. 2, 7-21
Subscriber Module SLC-96/Remote Vol. 3, 5-21
Subscriber Module SLC-96/Remote Vol. 3, 4-288
XPM-PLUS Basic Vol. 1, 6-278
Operations gateway (OGW)
functional elements Vol. 2, 5-24, Vol. 2, 6-23, Vol. 3, 3-36
OPM Maintenance feature package
office parameters
OPM_CHARGE_DURATION Vol. 1, 5-154
OPM_CHARGE_START_TIME Vol. 1, 5-154
OPM_DISCHARGE_TIME Vol. 1, 5-155
OPM_MIN_CHG_VOLT Vol. 1, 5-155
OPM_VOLT_TST_CHG Vol. 1, 5-156
OPM_VOLT_TST_DIS Vol. 1, 5-156
OPM_VOLT_TST_LTU_ADJUSTMENT Vol. 1, 5-157
OPM_VOLT_TST_OCC Vol. 1, 5-155
OPMINV, table
datafilling Vol. 1, 3-102, Vol. 1, 5-158
Origination and channel allocation
Vol. 2, 5-31, Vol. 2, 5-32, Vol. 2, 5-34, Vol. 2, 5-35, Vol. 2, 6-30, Vol. 2, 6-31, Vol. 2, 6-33, Vol. 3, 3-43, Vol. 3, 3-44, Vol. 3, 3-46, Vol. 3, 3-47
Outside Plant Access Cabinet (OPAC)
datafilling
preparation Vol. 1, 5-8
procedures Vol. 1, 5-9
tasks Vol. 1, 5-9
message channels Vol. 1, 5-3
overview Vol. 1, 5-1
protocol
DMS-X Vol. 1, 5-4

signaling Vol. 1, 5-2
call origination Vol. 1, 5-6
dial pulse Vol. 1, 5-7
digit collection Vol. 1, 5-6
DTMF Vol. 1, 5-7
end-to-end Vol. 1, 5-7
ESA Vol. 1, 5-8
links Vol. 1, 5-3
protocol Vol. 1, 5-4
ringing Vol. 1, 5-7
tone origination Vol. 1, 5-6

P

Path Protection
CSC Vol. 2, 5-6, Vol. 2, 5-7, Vol. 2, 6-9, Vol. 3, 3-17, Vol. 3, 3-18
EOC Vol. 2, 5-7, Vol. 2, 6-9, Vol. 3, 3-18
Path protection
TMC Vol. 2, 6-8, Vol. 3, 3-16
Path protection switching Vol. 2, 6-13
PBX
central office access Vol. 2, 5-47, Vol. 2, 6-41, Vol. 3, 3-58
PMLOADS, table
datafilling Vol. 1, 6-272, Vol. 2, 3-35, Vol. 2, 5-85, Vol. 2, 6-74, Vol. 3, 2-33, Vol. 3, 3-95, Vol. 3, 4-46, Vol. 3, 4-219, Vol. 3, 4-276, Vol. 3, 4-292, Vol. 3, 5-34
PMNODES, table
datafilling Vol. 1, 3-27, Vol. 1, 4-29, Vol. 1, 5-27, Vol. 1, 6-48, Vol. 2, 3-41, Vol. 2, 4-40, Vol. 2, 5-71, Vol. 2, 6-61, Vol. 2, 7-36, Vol. 3, 2-17, Vol. 3, 3-97, Vol. 3, 4-52
POTS Vol. 2, 5-40, Vol. 2, 6-38, Vol. 3, 3-51
flat rate Vol. 2, 5-40, Vol. 2, 6-38, Vol. 3, 3-51
party multirate Vol. 2, 5-40, Vol. 2, 6-38, Vol. 3, 3-51
Prerequisites
Subscriber Carrier Module-100 Access Vol. 2, 5-60
prerequisites
BAS RSC Vol. 1, 6-14
CLASS features Vol. 2, 3-121, Vol. 2, 4-120
CLASS-Call Setup Vol. 3, 4-108
Custom Local Area Signaling Service Vol. 1, 6-113
Dual Remote Cluster Controller Vol. 3, 4-185
Dual Remote Cluster Controller (DRCC) Vol. 1, 6-140
Emergency Stand-Alone Operation Vol. 1, 5-124
ESA call processing Vol. 1, 3-112, Vol. 1, 4-94
Firmware Downloading Vol. 1, 6-267
firmware downloading Vol. 3, 4-271
ISDN on RSC-S Vol. 3, 4-201
Meridian Digital Centrex Basic Vol. 2, 3-148, Vol. 3, 5-117
New Peripheral Maintenance Package Vol. 1, 6-236
Outside Plant Module Vol. 1, 3-95
Remote Line Concentrating Module Vol. 1, 3-11, Vol. 1, 4-11, Vol. 1, 5-10
RLCM Intracalling Vol. 1, 3-106, Vol. 1, 4-131, Vol. 1, 5-161
RSC Enhanced ESA (Lines and Trunks) Vol. 3, 4-311
RSC Enhanced ESA Lines and Trunks Vol. 1, 6-164
RSC ESA lines Vol. 1, 6-175
RSC Trunking Vol. 1, 6-246
RSC-ESA Line and Trunks Vol. 1, 6-193
RSC-ESA lines Vol. 3, 4-149
RSC-ESA lines and trunks Vol. 3, 4-166
RSC-S basic call processing Vol. 3, 4-22
RSC-S Enhanced ESA for ISDN (Lines and Trunks) Vol. 3, 4-339
RSC-S Enhanced ESA for ISDN (Lines Only) Vol. 3, 4-328
SCM SLC-96 Basic Vol. 2, 3-19
Special Services for Subscriber Carrier Module Vol. 2, 3-150
Special Services for Subscriber Carrier Module Remote Vol. 3, 5-98
Star Remote Hub basic call processing Vol. 2, 7-20
Subscriber Module SLC-96/Remote Vol. 3, 5-21
Subscriber Module SLC-96/Remote Vol. 3, 4-288
XPM-PLUS Basic Vol. 1, 6-278

Private Branch Exchange Vol. 2, 5-47, Vol. 2, 6-41, Vol. 3, 3-58
Product Computing Module Loads (PCLs) Vol. 1, 5-8
Provisioning
MADN for SMA-S/DMS AccessNode configuration Vol. 2, 5-46
PSNAILUP
datafilling Vol. 3, 5-102
PSNAILUP, table
datafilling Vol. 2, 3-153

Q

Q.931
message descriptions Vol. 2, 5-22, Vol. 2, 6-22, Vol. 3, 3-34
call proceeding Vol. 2, 5-22, Vol. 2, 6-22, Vol. 3, 3-34
connect Vol. 2, 5-23, Vol. 2, 6-22, Vol. 3, 3-34
disconnect Vol. 2, 5-23, Vol. 2, 6-22, Vol. 3, 3-34
information Vol. 2, 5-23, Vol. 2, 6-22, Vol. 3, 3-34
release Vol. 2, 5-23, Vol. 2, 6-22, Vol. 3, 3-35
release complete Vol. 2, 5-23, Vol. 2, 6-22, Vol. 3, 3-35
setup Vol. 2, 6-23, Vol. 3, 3-35
status Vol. 2, 5-24, Vol. 2, 6-23, Vol. 3, 3-36
status inquiry Vol. 2, 5-24, Vol. 2, 6-23, Vol. 3, 3-36

R

RCC2
abilities Vol. 3, 4-311
RCCINV table
datafilling Vol. 3, 4-173
RCCINV, table
DATAFILLING Vol. 3, 4-346
datafilling Vol. 1, 6-63, Vol. 1, 6-120, Vol. 1, 6-158, Vol. 1, 6-169, Vol. 1, 6-184, Vol. 1, 6-205, Vol. 1, 6-243, Vol. 1, 6-256, Vol. 1, 6-275, Vol. 1, 6-279, Vol. 2, 7-46, Vol. 3, 4-67, Vol. 3, 4-114, Vol. 3, 4-140, Vol. 3, 4-158, Vol. 3, 4-191, Vol. 3, 4-233, Vol. 3, 4-284, Vol. 3, 4-299, Vol. 3, 4-317, Vol. 3, 4-332
RCCPSINV, table
datafilling Vol. 1, 6-71, Vol. 3, 4-143, Vol. 3, 4-199, Vol. 3, 4-241, Vol. 3, 4-302
RCCPSINV. table
datafilling Vol. 2, 7-53, Vol. 3, 4-75
RCSINV, table
datafilling Vol. 2, 3-54, Vol. 3, 5-46
RDT Vol. 2, 5-12, Vol. 2, 5-32, Vol. 2, 5-33, Vol. 2, 5-35, Vol. 2, 5-36, Vol. 2, 5-37, Vol. 2, 5-38, Vol. 2, 6-14, Vol. 2, 6-30, Vol. 2, 6-31, Vol. 2, 6-32, Vol. 2, 6-33, Vol. 2, 6-35, Vol. 2, 6-36, Vol. 3, 3-23, Vol. 3, 3-43, Vol. 3, 3-44, Vol. 3, 3-45, Vol. 3, 3-47, Vol. 3, 3-48, Vol. 3, 3-49
signaling Vol. 2, 5-4, Vol. 2, 6-4, Vol. 3, 3-6
RDTLT, table
datafilling Vol. 2, 5-154
RECEIVER, table
datafilling Vol. 2, 7-95
Remote Switching Center (RSC)
circuit cards Vol. 1, 6-2
configurations Vol. 1, 6-4
DS0-1 electrical interface Vol. 1, 6-9
datafill preparation Vol. 1, 6-9
datafill requirements Vol. 1, 6-10
dual configuration with trunking
illustration Vol. 1, 6-8
dual configuration without trunking
illustration Vol. 1, 6-6
frames
illustrations Vol. 1, 6-3
services Vol. 1, 6-4
single configuration with trunking
illustration Vol. 1, 6-7
single configuration without trunking
illustration Vol. 1, 6-5
software delivery Vol. 1, 6-9
software functions Vol. 1, 6-1
translations Vol. 1, 6-1
Remote Switching Center-SONET (RSC-S)
and RSC Vol. 3, 4-2
configurations Vol. 3, 4-8
datafill preparation Vol. 3, 4-16
configurations Vol. 3, 4-17
end-user data
collecting Vol. 3, 4-17
requirements Vol. 3, 4-18
description Vol. 3, 4-1
development Vol. 3, 4-2

DS-1 electrical interface Vol. 3, 4-13
dual RSC-S with ISDN
illustration Vol. 3, 4-12
dual RSC-S without ISDN
illustration Vol. 3, 4-10
packaging Vol. 3, 4-3
services Vol. 3, 4-7
signaling Vol. 3, 4-14
additions Vol. 3, 4-14
DDL to SLC-96 Vol. 3, 4-14
extended time format Vol. 3, 4-15
SONET format Vol. 3, 4-16
single RSC-S with ISDN
illustration Vol. 3, 4-11
single RSC-S without ISDN
illustration Vol. 3, 4-9
software Vol. 3, 4-2
software delivery Vol. 3, 4-16
system architecture Vol. 3, 4-3
translations Vol. 3, 4-1
RESFEAT, table
datafilling Vol. 1, 6-135, Vol. 2, 3-142, Vol. 2, 4-138, Vol. 3, 4-128
RESOFC, table
datafilling Vol. 1, 6-128, Vol. 2, 3-136, Vol. 2, 4-133, Vol. 3, 4-123
Restrictions
Subscriber Carrier Module-100 Access Vol. 2, 5-62
restrictions
BAS RSC Vol. 1, 6-30
CLASS features Vol. 2, 3-123, Vol. 2, 4-122
CLASS-Call Setup Vol. 3, 4-110
Custom Local Area Signaling Service Vol. 1, 6-116
Dual Remote Cluster Controller Vol. 3, 4-188
Dual Remote Cluster Controller (DRCC) Vol. 1, 6-142
Emergency Stand-Alone Operation Vol. 1, 5-126
ESA call processing Vol. 1, 3-115, Vol. 1, 4-96, Vol. 2, 7-131
Firmware Downloading Vol. 1, 6-271
firmware downloading Vol. 3, 4-275
ISDN on RSC-S Vol. 3, 4-215
Meridian Digital Centrex Basic Vol. 2, 3-148, Vol. 3, 5-118
OPM Maintenance Vol. 1, 5-152
Outside Plant Module Vol. 1, 3-97
Remote Line Concentrating Module Vol. 1, 3-12, Vol. 1, 4-12, Vol. 1, 5-10
RLCM Intracalling Vol. 1, 3-107, Vol. 1, 4-132, Vol. 1, 5-162
RSC Enhanced ESA (Lines and Trunks) Vol. 3, 4-315
RSC Enhanced ESA Lines and Trunks Vol. 1, 6-167
RSC ESA lines Vol. 1, 6-178
RSC Trunking Vol. 1, 6-252
RSC-ESA Line and Trunks Vol. 1, 6-200
RSC-ESA lines Vol. 3, 4-156
RSC-ESA lines and trunks Vol. 3, 4-171
RSC-S basic call processing Vol. 3, 4-39
RSC-S dynamic trunks Vol. 3, 4-139
RSC-S Enhanced ESA for ISDN (Lines and Trunks) Vol. 3, 4-344
RSC-S Enhanced ESA for ISDN (Lines Only) Vol. 3, 4-330
SCM SLC-96 Basic Vol. 2, 3-21
Special Services for Subscriber Carrier Module Vol. 2, 3-151
Special Services for Subscriber Carrier Module Remote Vol. 3, 5-99
Star Remote Hub basic call processing Vol. 2, 7-22
Subscriber Module SLC-96/Remote Vol. 3, 5-21
Subscriber Module SLC-96/Remote Vol. 3, 4-290
XPM-PLUS Basic Vol. 1, 6-279
REXSCHED, table
datafilling Vol. 1, 3-52, Vol. 1, 4-52, Vol. 1, 5-43, Vol. 1, 6-86, Vol. 2, 7-85, Vol. 3, 4-84
RFT Vol. 2, 5-3, Vol. 3, 3-5, Vol. 3, 3-70
Ringing
description of Vol. 2, 5-35, Vol. 2, 5-36, Vol. 2, 6-34, Vol. 3, 3-47, Vol. 3, 3-48
distinctive Vol. 2, 5-49, Vol. 2, 6-42, Vol. 3, 3-59
distinctive ringing Vol. 2, 5-35, Vol. 2, 6-34, Vol. 3, 3-47

single party Vol. 2, 5-49, Vol. 2, 6-42, Vol. 3, 3-59
single#1e>party Vol. 2, 5-35, Vol. 2, 6-34, Vol. 3, 3-47
SMA2 Vol. 2, 5-49, Vol. 2, 6-42, Vol. 3, 3-59
RLCM/OPM
datafill preparation Vol. 1, 3-8, Vol. 1, 4-8
PCLs Vol. 1, 3-8, Vol. 1, 4-8
procedures Vol. 1, 3-9, Vol. 1, 4-9
tasks Vol. 1, 3-9, Vol. 1, 4-9
overview Vol. 1, 3-1, Vol. 1, 4-1
signaling Vol. 1, 3-2, Vol. 1, 4-2
functions Vol. 1, 3-5, Vol. 1, 3-6, Vol. 1, 3-7, Vol. 1, 3-8, Vol. 1, 3-10, Vol. 1, 4-5, Vol. 1, 4-6, Vol. 1, 4-7, Vol. 1, 4-8
links Vol. 1, 3-2, Vol. 1, 4-2
protocol Vol. 1, 3-3, Vol. 1, 4-3
system integration (illustration) Vol. 1, 3-2, Vol. 1, 4-2
translations Vol. 1, 3-1, Vol. 1, 4-1
RLCM/OPM ordering code
table Vol. 1, 3-9, Vol. 1, 4-9
RMMINV, table
datafilling Vol. 1, 3-50, Vol. 1, 4-49, Vol. 1, 5-42, Vol. 1, 6-84, Vol. 3, 4-82, Vol. 3, 4-249
RMPCKT, table
datafilling Vol. 2, 7-75
Robbed bit signaling Vol. 2, 6-7
RTDINV, table
datafilling Vol. 2, 5-107, Vol. 3, 2-60, Vol. 3, 3-123, Vol. 3, 3-225

S

S/DMS AccessNode Vol. 3, 3-5, Vol. 3, 3-67, Vol. 3, 3-70
SCGRP, table
datafilling Vol. 1, 3-67, Vol. 1, 4-67, Vol. 1, 5-62, Vol. 1, 5-94, Vol. 2, 3-82, Vol. 2, 5-164, Vol. 3, 5-69
SDGRP, table
datafilling Vol. 1, 3-68, Vol. 1, 4-68, Vol. 1, 5-64, Vol. 1, 5-95, Vol. 2, 3-83, Vol. 2, 5-165, Vol. 3, 5-70
Series 800E Cabinet Vol. 1, 5-150
Services Vol. 2, 5-40, Vol. 2, 6-38, Vol. 3, 3-51
800 Vol. 2, 5-48, Vol. 2, 6-41, Vol. 3, 3-58
SSP Vol. 2, 5-48, Vol. 2, 6-41, Vol. 3, 3-58
CLASS
card Vol. 2, 5-45, Vol. 2, 6-40, Vol. 3, 3-56
coin Vol. 2, 5-40, Vol. 2, 6-38, Vol. 3, 3-52
EBS Vol. 2, 5-43
ISDN
voice and data Vol. 2, 5-48, Vol. 2, 6-41, Vol. 3, 3-59
MADN Vol. 2, 5-46, Vol. 3, 3-56
MDC Vol. 2, 5-45, Vol. 2, 6-40, Vol. 3, 3-56
PBX
central office access Vol. 2, 5-47, Vol. 2, 6-41, Vol. 3, 3-58
toll diversion Vol. 2, 5-48, Vol. 2, 6-41, Vol. 3, 3-58
POTS Vol. 2, 5-40, Vol. 2, 6-38, Vol. 3, 3-51
residential Vol. 2, 5-47, Vol. 2, 6-41, Vol. 3, 3-58
POTS Vol. 2, 5-47, Vol. 2, 6-41, Vol. 3, 3-58
secretarial line Vol. 2, 5-47, Vol. 2, 6-41, Vol. 3, 3-58
teen Vol. 2, 5-47, Vol. 2, 6-41, Vol. 3, 3-58
UTR Vol. 2, 5-45, Vol. 2, 6-40, Vol. 3, 3-55
WATS Vol. 2, 5-48, Vol. 2, 6-41, Vol. 3, 3-58
INWATS Vol. 2, 5-48, Vol. 2, 6-41, Vol. 3, 3-58
OUTWATS Vol. 2, 5-48, Vol. 2, 6-41, Vol. 3, 3-58
two#1e>way WATS Vol. 2, 5-48, Vol. 2, 6-41, Vol. 3, 3-58
SFWALARM, table
datafilling Vol. 2, 5-141, Vol. 2, 6-126, Vol. 3, 2-83, Vol. 3, 3-160
Signaling
A- and B-bit Vol. 2, 5-3, Vol. 2, 6-3, Vol. 2, 7-5, Vol. 3, 3-5
CSC Vol. 2, 5-6, Vol. 3, 3-13
FXS Vol. 3, 3-10
in-band Vol. 2, 6-7, Vol. 3, 3-14
ISDN BRI Vol. 2, 5-3, Vol. 2, 6-3, Vol. 2, 7-5, Vol. 3, 3-5
out-of-band Vol. 2, 6-6, Vol. 3, 3-14
RBS Vol. 2, 6-7
TMC Vol. 2, 6-6, Vol. 3, 3-13
TR-303 hybrid Vol. 2, 6-6, Vol. 3, 3-13

SITE , table
datafilling Vol. 3, 4-44, Vol. 3, 4-219
SITE, table
datafilling Vol. 1, 3-25, Vol. 1, 4-25, Vol. 1, 5-24, Vol. 1, 6-40, Vol. 2, 3-27, Vol. 2, 5-69, Vol. 2, 7-34, Vol. 3, 4-291, Vol. 3, 5-27
SMA
capabilities Vol. 2, 6-38
SMA2
services Vol. 3, 3-51
SOFTKEY, table
datafilling Vol. 1, 6-123, Vol. 2, 3-128, Vol. 2, 4-127, Vol. 2, 5-181, Vol. 2, 6-162, Vol. 3, 2-118, Vol. 3, 3-201, Vol. 3, 4-118
SPECCONN, table
datafilling Vol. 2, 5-103, Vol. 3, 4-256
Speed Calling Vol. 2, 5-43
STAR
signaling Vol. 2, 7-10
links Vol. 2, 7-11
MBS Vol. 2, 7-14
signaling functions
call origination Vol. 2, 7-11
digit collection Vol. 2, 7-12
end-to-end signaling Vol. 2, 7-13
ESA signaling Vol. 2, 7-14
ringing Vol. 2, 7-13
tone generation Vol. 2, 7-12
signaling protocols
HDLC protocol Vol. 2, 7-10
Star Remote Hub Vol. 2, 7-1
datafill preparation
procedures Vol. 2, 7-18, Vol. 2, 7-19
tasks Vol. 2, 7-18
overview Vol. 2, 7-1
Star Remote Module
overview Vol. 2, 7-2
Star Remote System
configuration Vol. 2, 7-4
introduction Vol. 2, 7-1
Station Message Detail Recording
RSC-S dynamic trunks Vol. 3, 4-140
Subscriber Carrier Module -100S (SMS)
datafill preparation Vol. 2, 3-16
controlling RCS modes Vol. 2, 3-17
protection lines Vol. 2, 3-17
special services nailed-up cross connections Vol. 2, 3-17
static datalog tracking Vol. 2, 3-18
tasks Vol. 2, 3-17
signaling Vol. 2, 3-1
signaling protocols Vol. 2, 3-3
A- and B-bit messages Vol. 2, 3-3
DDL messages Vol. 2, 3-3
DMS-X handshaking protocol
illustration Vol. 2, 3-4
DMS-X message format
illustration Vol. 2, 3-5
DMS-X protocol Vol. 2, 3-4
nailed-up cross-connections Vol. 2, 3-6
SMS-RCS signaling functions Vol. 2, 3-6
A- and B-bit messaging Vol. 2, 3-6
call processing Vol. 2, 3-8
CLASS features Vol. 2, 3-9
coin features Vol. 2, 3-6
custom calling services Vol. 2, 3-9
dataport cross-connection Vol. 2, 3-13
DDL messaging Vol. 2, 3-11
dialing Vol. 2, 3-10
frequency selective ringing Vol. 2, 3-10
MDC on SMS Vol. 2, 3-10
nailed-up cross-connections Vol. 2, 3-12, Vol. 2, 3-14
PBX line Vol. 2, 3-9
POTS Vol. 2, 3-6
ringing Vol. 2, 3-9
tones Vol. 2, 3-10
universal tone receiver (UTR) Vol. 2, 3-7
SMS-RCS signaling links Vol. 2, 3-1
software delivery Vol. 2, 3-16
translations Vol. 2, 3-1
Subscriber Carrier Module-100 Access
automatic maintenance
path protection switching Vol. 2, 5-13, Vol. 2, 6-15
Communication protocols Vol. 2, 5-14
description
coin call messages Vol. 2, 5-42, Vol. 2, 6-40
Meridian business set (MBS) messaging Vol. 2, 5-44
Path protection switching Vol. 2, 5-12
protocol
DS30 Vol. 2, 5-14, Vol. 2, 6-16
EOC Vol. 2, 5-14, Vol. 2, 6-16
Q.921 Vol. 2, 5-14, Vol. 2, 6-16
Q.931 Vol. 2, 5-14, Vol. 2, 6-16

protocols
DS30 Vol. 2, 5-28, Vol. 2, 6-26
services Vol. 2, 5-40
signaling
DS30 protocol Vol. 2, 5-29, Vol. 2, 6-28
SMA system
description Vol. 2, 5-1, Vol. 2, 6-1
Subscriber Carrier Module-100 Access (SMA)
datafill preparation Vol. 2, 5-56
data logs
tracking Vol. 2, 5-56
data, static
updating Vol. 2, 5-57
software delivery Vol. 2, 5-56
tasks associated Vol. 2, 5-56
description Vol. 2, 5-1
translating Vol. 2, 5-1
Subscriber loop
protocol Vol. 2, 7-17
Superframe format (SF) signaling Vol. 2, 7-6

T

table editor
commands Vol. 1, 2-4, Vol. 2, 2-4, Vol. 3, 2-4
using Vol. 1, 2-2, Vol. 2, 2-2, Vol. 3, 2-2
Table flow
Subscriber Carrier Module-100 Access Vol. 2, 5-62
table flow
BAS RSC Vol. 1, 6-26
CLASS features Vol. 2, 3-123, Vol. 2, 4-122
CLASS-Call Setup Vol. 3, 4-110
Custom Local Area Signaling Service Vol. 1, 6-115
Dual Remote Cluster Controller Vol. 3, 4-187
Dual Remote Cluster Controller (DRCC) Vol. 1, 6-142
Emergency Stand-Alone Operation Vol. 1, 5-126
ESA call processing Vol. 1, 3-114, Vol. 1, 4-96, Vol. 2, 7-130
Firmware Downloading Vol. 1, 6-270
firmware downloading Vol. 3, 4-274
ISDN on RSC-S Vol. 3, 4-206
Meridian Digital Centrex Basic Vol. 2, 3-148, Vol. 3, 5-117
New Peripheral Maintenance Package Vol. 1, 6-240
OPM Maintenance Vol. 1, 5-152
Outside Plant Module Vol. 1, 3-97
Remote Line Concentrating Module Vol. 1, 3-12, Vol. 1, 4-11, Vol. 1, 5-10
RLCM Intracalling Vol. 1, 3-107, Vol. 1, 4-132, Vol. 1, 5-162
RSC Enhanced ESA (Lines and Trunks) Vol. 3, 4-313
RSC Enhanced ESA Lines and Trunks Vol. 1, 6-167
RSC ESA lines Vol. 1, 6-178
RSC Trunking Vol. 1, 6-250
RSC-ESA Line and Trunks Vol. 1, 6-195
RSC-ESA lines Vol. 3, 4-155
RSC-ESA lines and trunks Vol. 3, 4-169
RSC-S basic call processing Vol. 3, 4-34
RSC-S dynamic trunks Vol. 3, 4-138
RSC-S Enhanced ESA for ISDN (Lines and Trunks) Vol. 3, 4-341
RSC-S Enhanced ESA for ISDN (Lines Only) Vol. 3, 4-329
SCM SLC-96 Basic Vol. 2, 3-21
Special Services for Subscriber Carrier Module Vol. 2, 3-150
Special Services for Subscriber Carrier Module Remote Vol. 3, 5-99
Star Remote Hub basic call processing Vol. 2, 7-21
Subscriber Module SLC-96/Remote Vol. 3, 5-21
Subscriber Module SLC-96/Remote Vol. 3, 4-289
XPM-PLUS Basic Vol. 1, 6-279
Tables
RDTINV Vol. 2, 5-15, Vol. 2, 6-17, Vol. 3, 3-26
tables
changing Vol. 1, 2-4, Vol. 2, 2-4, Vol. 3, 2-4
Technical Education Course 0434 “ESMA Maintenance
Common signaling channel (CSC) signaling Vol. 3, 3-17
Communication protocols Vol. 3, 3-25
Embedded operations channel (EOC) signaling Vol. 3, 3-18

Extended superframe format (ESF) signaling Vol. 3, 3-8
Functions of main components Vol. 3, 3-1
FXS signaling Vol. 3, 3-10
Path protection switching Vol. 3, 3-22
SERVORD Vol. 3, 2-122, Vol. 3, 3-205
SMA2 services Vol. 3, 3-51
Superframe format (SF) signaling Vol. 3, 3-6
Table CARRMTC Vol. 3, 2-28, Vol. 3, 3-89, Vol. 3, 3-218
Table LTCINV Vol. 3, 2-22, Vol. 3, 3-83
Table LTCPSINV Vol. 3, 2-39, Vol. 3, 3-100, Vol. 3, 3-223
Table RDTINV Vol. 3, 2-60, Vol. 3, 3-123, Vol. 3, 3-225
TR-303 hybrid signaling Vol. 3, 3-14
TEXLOG, table
datafilling Vol. 1, 6-126
TEXPHRS, table
datafilling Vol. 1, 6-124
TEXTLOG, table
datafilling Vol. 2, 3-131, Vol. 2, 4-129, Vol. 2, 5-180, Vol. 2, 6-160, Vol. 3, 2-116, Vol. 3, 3-199, Vol. 3, 4-119
TEXTPHRS, table
datafilling Vol. 2, 3-130, Vol. 2, 4-128, Vol. 2, 5-178, Vol. 2, 6-159, Vol. 3, 2-114, Vol. 3, 3-197, Vol. 3, 4-119
Three#1e>way Calling Vol. 2, 5-43
TMC Vol. 2, 6-8, Vol. 2, 6-30, Vol. 2, 6-33, Vol. 3, 3-16, Vol. 3, 3-43, Vol. 3, 3-46
call reference Vol. 2, 5-17, Vol. 2, 6-19, Vol. 3, 3-29
information element Vol. 2, 5-19, Vol. 2, 6-21, Vol. 3, 3-30
LAPD Vol. 2, 6-16, Vol. 3, 3-25
message structure Vol. 2, 5-16, Vol. 2, 6-19, Vol. 3, 3-28
path protection Vol. 2, 6-8, Vol. 3, 3-16
protocol discriminator Vol. 2, 5-17, Vol. 2, 6-19, Vol. 3, 3-28
Q.921 Vol. 2, 6-16, Vol. 3, 3-25
Q.931 Vol. 2, 6-16, Vol. 3, 3-25
TMINV, table
datafilling Vol. 2, 3-65, Vol. 2, 5-137, Vol. 3, 5-52
TOFCNAME, table
datafilling Vol. 1, 3-69, Vol. 1, 4-69, Vol. 1, 5-64, Vol. 1, 5-96, Vol. 2, 7-103
Tone generation Vol. 2, 5-32, Vol. 2, 5-33, Vol. 2, 5-34, Vol. 2, 5-36, Vol. 2, 5-37, Vol. 2, 6-31, Vol. 2, 6-32, Vol. 2, 6-35, Vol. 3, 3-44, Vol. 3, 3-45, Vol. 3, 3-48, Vol. 3, 3-49
Tones Vol. 2, 5-49, Vol. 2, 6-43, Vol. 3, 3-60
busy Vol. 2, 5-49, Vol. 2, 6-43, Vol. 3, 3-60
dial Vol. 2, 5-49, Vol. 2, 6-43, Vol. 3, 3-60
off#1e>hook Vol. 2, 5-49, Vol. 2, 6-43, Vol. 3, 3-60
reorder Vol. 2, 5-49, Vol. 2, 6-43, Vol. 3, 3-60
ringback Vol. 2, 5-49, Vol. 2, 6-43, Vol. 3, 3-60
TR-303
hybrid signaling Vol. 2, 6-6, Vol. 3, 3-14
TR-303 I/F for MVI RDT
datafilling Vol. 3, 2-7
TR-303 I/F for S/DMS AccessNode
datafilling Vol. 3, 3-70
Translating
RSC-ESA lines and trunks Vol. 3, 4-166
Subscriber Carrier Module-100 Access Vol. 2, 5-60
translating
BAS RSC Vol. 1, 6-14
CLASS features Vol. 2, 3-121, Vol. 2, 4-120
CLASS-Call Setup Vol. 3, 4-108
Custom Local Area Signaling Service Vol. 1, 6-113
Dual Remote Cluster Controller Vol. 3, 4-185
Dual Remote Cluster Controller (DRCC) Vol. 1, 6-140
ESA call processing Vol. 1, 3-112, Vol. 1, 4-94
Firmware Downloading Vol. 1, 6-267
firmware downloading Vol. 3, 4-271
ISDN on RSC-S Vol. 3, 4-201
Meridian Digital Centrex Basic Vol. 2, 3-148, Vol. 3, 5-117
New Peripheral Maintenance Package Vol. 1, 6-236
Outside Plant Module Vol. 1, 3-95
Remote Line Concentrating Module Vol. 1, 3-11, Vol. 1, 4-11
RLCM Intracalling Vol. 1, 3-106, Vol. 1, 4-131

RSC Enhanced ESA (Lines and Trunks) Vol. 3, 4-311
RSC Enhanced ESA Lines and Trunks Vol. 1, 6-164
RSC ESA lines Vol. 1, 6-175
RSC Trunking Vol. 1, 6-246
RSC-ESA Line and Trunks Vol. 1, 6-193
RSC-ESA lines Vol. 3, 4-149
RSC-S basic call processing Vol. 3, 4-22
RSC-S dynamic trunks Vol. 3, 4-135
RSC-S Enhanced ESA for ISDN (Lines and Trunks) Vol. 3, 4-339
RSC-S Enhanced ESA for ISDN (Lines Only) Vol. 3, 4-328
SCM SLC-96 Basic Vol. 2, 3-19
Special Services for Subscriber Carrier Module Vol. 2, 3-150
Special Services for Subscriber Carrier Module Remote Vol. 3, 5-98
Star Remote Hub basic call processing Vol. 2, 7-20
Subscriber Module SLC-96/Remote Vol. 3, 5-21
Subscriber Module SLC-96/Remote Vol. 3, 4-288
XPM-PLUS Basic Vol. 1, 6-278
Translations
datafill sequence Vol. 1, 4-124, Vol. 1, 6-230, Vol. 2, 7-157, Vol. 3, 4-361
LCMDRINV Vol. 1, 4-125, Vol. 1, 6-230, Vol. 2, 7-157, Vol. 3, 4-361
LNINV Vol. 1, 4-127, Vol. 1, 6-232, Vol. 2, 7-159, Vol. 3, 4-363
table flow Vol. 1, 4-121, Vol. 1, 6-226, Vol. 2, 7-153, Vol. 3, 4-357
TRKGRP table
datafilling Vol. 3, 4-181
TRKGRP, table
datafilling Vol. 1, 3-56, Vol. 1, 4-56, Vol. 1, 5-46, Vol. 1, 6-88, Vol. 1, 6-207, Vol. 1, 6-258, Vol. 2, 3-67, Vol. 2, 5-138, Vol. 2, 7-88, Vol. 3, 4-87, Vol. 3, 4-324, Vol. 3, 5-54
TRKMEM table
datafilling Vol. 3, 4-182
TRKMEM, table
datafilling Vol. 1, 3-61, Vol. 1, 4-61, Vol. 1, 5-52, Vol. 1, 6-93, Vol. 1, 6-213, Vol. 1, 6-265, Vol. 2, 3-73, Vol. 2, 5-140, Vol. 2, 7-93, Vol. 3, 4-92, Vol. 3, 4-325, Vol. 3, 5-60, Vol. 3, 5-61
TRKSGRP table
datafilling Vol. 3, 4-182
TRKSGRP, table
datafilling Vol. 1, 3-58, Vol. 1, 4-58, Vol. 1, 5-48, Vol. 1, 6-90, Vol. 1, 6-210, Vol. 1, 6-262, Vol. 2, 3-69, Vol. 2, 5-140, Vol. 2, 7-90, Vol. 3, 4-89, Vol. 3, 4-325, Vol. 3, 5-56
Trunks
test types Vol. 3, 4-89
tuple properties Vol. 1, 2-1, Vol. 2, 2-1, Vol. 3, 2-1

U

Universal tone receiver Vol. 2, 5-45, Vol. 2, 6-40, Vol. 3, 3-55
UTR Vol. 2, 5-45, Vol. 2, 6-40, Vol. 3, 3-55

W

WATS Vol. 2, 5-48, Vol. 2, 6-41, Vol. 3, 3-58
Wide Area Telecommunications Services Vol. 2, 5-48, Vol. 2, 6-41, Vol. 3, 3-58

X

xDSL line card
protocol Vol. 2, 7-17
XESAINV, table
datafilling Vol. 1, 3-124, Vol. 1, 4-105, Vol. 1, 5-135

DMS-100 Family

Extended Peripheral Module

Extended Peripheral Module Translations Reference Manual

Volume 2 of 3

Product Documentation-Dept. 3423
Nortel Networks
PO Box 13010
RTP, NC 27709-3010
Telephone: 1-877-662-5669
Electronic mail: cits@nortelnetworks.com

Copyright © 1994-2001 Nortel Networks,
All Rights Reserved

NORTEL NETWORKS CONFIDENTIAL: The information contained herein is the property of Nortel Networks and is strictly confidential. Except as expressly authorized in writing by Nortel Networks, the holder shall keep all information contained herein confidential, shall disclose the information only to its employees with a need to know, and shall protect the information, in whole or in part, from disclosure and dissemination to third parties with the same degree of care it uses to protect its own confidential information, but with no less than reasonable care. Except as expressly authorized in writing by Nortel Networks, the holder is granted no rights to use the information contained herein.

Information is subject to change without notice. Nortel Networks reserves the right to make changes in design or components as progress in engineering and manufacturing may warrant. Changes or modification to the DMS-100 without the express consent of Nortel Networks may void its warranty and void the users authority to operate the equipment.

Nortel Networks, the Nortel Networks logo, the Globemark, How the World Shares Ideas, Unified Networks, DMS, DMS-100, Helmsman, MAP, Meridian, Nortel, Northern Telecom, NT, SuperNode, and TOPS are trademarks of Nortel Networks.

Publication number: 297-8321-815
Product release: XPM14 and up
Document release: Standard 14.01
Date: March 2001
Printed in the United States of America

NORTEL NETWORKS™