297-8403-910

System name

North American DMS-100

TOPS Translations Guide Volume 3 of 5
Groups ABS, ENSV, and OSAN

TOPS15 and up Standard 01.01 May 2001

NORTEL NETWORKS
How the world shares ideas.

System name

North American DMS-100

TOPS Translations Guide Volume 3 of 5

Groups ABS, ENSV, and OSAN

Publication number: 297-8403-910
Product release: TOPS15 and up
Document release: Standard 01.01
Date: May 2001

Copyright © 1996-2001 Nortel Networks,
All Rights Reserved

Printed in the United States of America

NORTEL NETWORKS CONFIDENTIAL: The information contained herein is the property of Nortel Networks and is strictly confidential. Except as expressly authorized in writing by Nortel Networks, the holder shall keep all information contained herein confidential, shall disclose the information only to its employees with a need to know, and shall protect the information, in whole or in part, from disclosure and dissemination to third parties with the same degree of care it uses to protect its own confidential information, but with no less than reasonable care. Except as expressly authorized in writing by Nortel Networks, the holder is granted no rights to use the information contained herein.

Informaton id subject to change without notice. Northern Telecom reserves the right to make changes in design or components as progress in engineering and manufacturing may warrant.

Contents

TOPS Translations Guide Volume 3 of 5
Groups ABS, ENSV, and OSAN

1 Datafilling Alternate Billing Services 1-1

AABS Call Screening 1-2
AABS Enhanced Services Access 1-20
Account Code Billing 1-51
Automated Alternate Billing Service 1-61
Automated Room and Authorization Number 1-117
Calling Card Denial Reasons 1-139
Disallowed Card Issuer Blocking 1-143
Exchange Alternate Billing Service 1-164
Exchange Alternate Billing Service (MCCS) 1-261
Exchange Alternate Billing Service - Canada 1-298
Expanded Calling Card Format SS7 1-341
French/English AABS 1-378
Operator handoff to the AABS 1-388
TOPS Authorization Code Billing 1-401
TOPS Commercial Credit Card 1-423
TOPS DN Call Screening 1-453
TOPS OLNS Interface 1-472

2 Datafilling Enhanced Services 2-1

Automatic Coin Toll Service 2-2
External RTRS Interface 2-48
IN Operator Backup 2-113
OLNS Foreign Language 2-131
OLNS Support of No Automation 2-142
Seconds Based Announcements 2-151

3 Datafilling Operator Services AIN 3-1

OSSAIN Initial Release 3-2
OSSAIN 07 Enhancements 3-151

Multi-Volume Contents

TOPS Translations Guide Volume 1 of 5
Group OSB

About this document v

How to check the version and issue of this document v
References in this document v
What precautionary messages mean vii
How commands, parameters, and responses are represented ix
Input prompt (>) ix
Commands and fixed parameters ix
Variables ix
Responses ix

1 Reference information 1-1

Revision history 1-1
TOPS15 changes 1-1
TOPS14 changes 1-2
TOPS13 changes 1-4
TOPS12 changes 1-5
TOPS11 changes 1-6
TOPS10 changes 1-7
TOPS09 changes 1-8
TOPS08 changes 1-10
TOPS07 changes 1-10
TOPS06 changes 1-12
TOPS05 changes 1-14
TOPS04 changes 1-16
TOPS03 changes 1-18
Preset office parameters 1-21

2 Datafilling Operator Services Basic 2-1

800+ Interworking with LNP 2-2
AMA Table 281 2-11
Attendant Pay Station 2-18
AudioGram Delivery Services-Offer of Service Prompt 2-44
Auto Country Direct 2-106
Automatic OIA Session Start 2-185
Billing Enhancements for EA Calls 2-189

Carrier Selection 2-196
Code Removal of TOPS IV 2-223
Directory Assistance/Toll Branding 2-230
DNSCRN Enhancements 2-258
Enhanced MFADS 2-265
Enhanced TOPS OC and Increased Remote Support 2-280
EOL for TOPS14 2-334
EOL for TOPS15 2-339
Estimated Call Charges 2-343
External Audio Response Host and Remote 2-351
FMCRT Elimination 2-371
GDP Support Location Digit Type 2-380
Host MP OC Data Link 2-383
Host OC Data Link 2-389
Host/Remote Networking by Queue Type 2-422
Improved STATSPAC 2-464
Interface Signaling 2-471
Logical TID for Time and Charges Recall 2-479
MD Code Removal and ReEngineering 2-481
Music and Announcement in Queue 2-497
New Access Method for SN 2-531
Operator Dial-up Autoquote 2-534
PICNAME Expansion 2-550
Position/Device Evolution IP 2-555
Pre-paid Coin 2-581
QMS Billing Indicator 2-595
QMS Customer Service Enhancements 2-604
QMS Host/Remote Queuing 2-679
Queue by Called Type 2-883
Remote MP OC Data Link 2-893
Remote OC Data Link 2-901
RU Robustness 2-929
Screened Service Routing 2-931
Table LATANAME Expansion 2-942
Table TOPSDISP Expansion 2-966
TCAP TRID Replacement 2-972
TMS Networking 2-976
TMS Processor Upgrade 2-999
TOPS06 Robustness 2-1020
TOPS ACD Features 2-102
TOPS Alternate Announcement 2-1058

TOPS Translations Guide Volume 2 of 5

Group OSB (continued)

1 Datafilling Operator Services Basic (continued) 1-1

TOPS AMA Enhancements 1-2
TOPS AMA Modifications-U.S. only 1-13
TOPS and Succession Interworking 1-29
TOPS AWT Enhancements 1-44
TOPS BC/STS/SNPA 1-55
TOPS Bellcore AMA 1-74
TOPS Call Processing Features (Administration) 1-97
TOPS Call Processing Features (Billing) 1-187
TOPS Call Processing Features (Call Processing) 1-229
TOPS Call Processing Features (Coin) 1-356
TOPS Call Processing Features (Connected Calls) 1-394
TOPS Call Processing Features (Global and Mobile) 1-446
TOPS Call Processing Features (Rating) 1-468
TOPS/Carrier Interworking 1-575
TOPS City Zone Rating 1-613
TOPS Close Down 1-622
TOPS DA Subtending TMS 1-654
TOPS E911 1-738
TOPS Extended BCAMA-EBAF 1-749
TOPS IDDD 15 Digit Expansion 1-820
TOPS Increased Multiplexing 1-837
TOPS Inward Validation 1-993
TOPS MP Interface 1-998
TOPS Multi-NPA Support 1-1006
TOPS NOTIS Format 1-1019
TOPS On/off Switch 1-1025
TOPS Open Position Protocol 1-1027
TOPS Operator Password 1-1034
TOPS Remote CAMA 1-1038
TOPS Robustness 1-1054
TOPS11 Robustness and Real Time Recovery 1-1065
TOPS SDM Interworking 1-1067
TOPS Service Billing 1-1070
TOPS SPM Interworking 1-1086
TOPS Two Terminal DA/Intercept 1-1091
Year 2000 1-1114
Treatment for Intercept Failure 1-1117
Two Digit ANI TOPS Office 1-1122

TOPS Translations Guide Volume 3 of 5

Groups ABS, ENSV, and OSAN

1 Datafilling Alternate Billing Services 1-1

AABS Call Screening 1-2
AABS Enhanced Services Access 1-20
Account Code Billing 1-51
Automated Alternate Billing Service 1-61
Automated Room and Authorization Number 1-117
Calling Card Denial Reasons 1-139
Disallowed Card Issuer Blocking 1-143
Exchange Alternate Billing Service 1-164
Exchange Alternate Billing Service (MCCS) 1-261
Exchange Alternate Billing Service - Canada 1-298
Expanded Calling Card Format SS7 1-341
French/English AABS 1-378
Operator handoff to the AABS 1-388
TOPS Authorization Code Billing 1-401
TOPS Commercial Credit Card 1-423
TOPS DN Call Screening 1-453
TOPS OLNS Interface 1-472

2 Datafilling Enhanced Services 2-1

Automatic Coin Toll Service 2-2
External RTRS Interface 2-48
IN Operator Backup 2-113
OLNS Foreign Language 2-131
OLNS Support of No Automation 2-142
Seconds Based Announcements 2-151

3 Datafilling Operator Services AIN 3-1

OSSAIN Initial Release 3-2
OSSAIN 07 Enhancements 3-151

TOPS Translations Guide Volume 4 of 5
Groups OSAN (continued), OSDA, and OSEA

1 Datafilling Operator Services AIN (continued) 1-1

OSSAIN 09 Enhancements 1-2
OSSAIN 10 Enhancements 1-33
OSSAIN 11 Enhancements 1-54
OSSAIN 12 Enhancements 1-123
OSSAIN Session Pricing 1-166

2 Datafilling Operator Services Directory Assistance 2-1
Automated DA Service 2-2
Automated DACC with Alternate Billing 2-119
Automated Intercept Call Completion 2-171
Cellular/IEC/LEC ADACC 2-204
DA Automation I/F 2-289
DACC Enhancements I 2-323
IBM Switch DAS/C Protocol 2-342
Miscellaneous DA Enhancements 2-377
Multiple DA System I 2-383
Standard Switch DAS/C Protocol 2-404
TOPS DA Call Processing 2-410
TOPS MP Support of Internal DRAM 2-477

3 Datafilling Operator Services Equal Access 3-1
Base TOPS Equal Access 3-2
Equal Access Carrier Code Expansion 3-124
FGB Carrier Code Expansion 3-137
GR317/GR394 ISUP to/from TOPS 3-164
OLNS IntraLATA Presubscription 3-212
Operator Services Network Capability 3-226
OSNC Enhancements 3-273
TOPS Bellcore LNP Enhancements 3-290
TOPS Canadian Equal Access 3-308
TOPS Carrier RLT 3-312
TOPS Carrier RLT-2 3-313
TOPS Exchange Access Operator Services Signaling 3-314
TOPS Flex ANI 3-410

TOPS Translations Guide Volume 5 of 5
Groups OSEA (continued), OSI, TPC, and UNBN

1 Datafilling Operator Services Equal Access (continued) 1-1
TOPS Incoming FGD Signaling 1-2
TOPS Inter-LATA Carrier 1-73
TOPS LNP 1-147

2 Datafilling Operator Services Information 2-1
Procedure: Adding an MPX Position 2-2
Procedure: Adding an OC Data Link Group 2-8
Procedure: Adding an OC Data Link Member 2-13
Procedure: Adding an OC Voice Link Group 2-16
Procedure: Adding an OC Voice Link Member 2-25
Procedure: Deleting an MPX Position 2-31
Procedure: Deleting an OC Data Link Group 2-32
Procedure: Deleting an OC Data Link Member 2-35

Procedure: Deleting an OC Voice Link Group 2-37
Procedure: Deleting an OC Voice Member 2-42
Reference: ANI to ISUP Conversion 2-44
Reference: DA Guidelines 2-51
Reference: TOPS Call Descriptions 2-71
Reference: TOPS MPX Guide 2-232
Reference: TOPS Related Office Parameters 2-252
Reference: TOPS Trunk Selection 2-272

3 Datafilling TOPS Position Controller 3-1
TOPS MP Terminal Support 3-2

4 Datafilling Unbundling 4-1
UNBN Billing Changes 4-2
UNBN Call Restrictions for Wholesaling 4-24
UNBN OPRTRANS and EA 4-50
UNBN Queueing 4-99
UNBN Screening for Billing Agreement 4-111
UNBN SPID Assignment 4-154
UNBN SPID Branding 4-182
UNBN Statistics 4-196
UNBN Translations and Routing 4-203

1 Datafilling Alternate Billing Services

This chapter contains the alternate billing service functionalities.

AABS Call Screening

Ordering codes

Functional group ordering code: ABS00101

Functionality ordering code: not applicable

Release applicability

BCS33 and later versions

Requirements

To operate, AABS Call Screening has the following requirements:

- BAS Generic, BAS00001
- Operator Services Basic, OSB00101, and table TOPSFTR parameter TOPS_ON_OFF_SWITCH = Y

Description

The following features provide this functionality:

Feature number	Feature name
NC0298	AABS/ACCS Call Screening

Feature NC0298 provides the following:

- Expansion of TOPS Terminating Code Screening in the ACCS/MCCS environment. Calls from coin and restricted telephones are screened calls. Calls from pay phones are also screened calls.
- Screening of calling card calls in the AABS environment. Before the release of this feature, the system only screened calling card calls in the Automatic Calling Card Service(ACCS)/Mechanized Calling Card Service (MCCS) environment.
- Screening of collect and third number billed calls in the AABS when an operator handles the calls.
- The AABS filtering of the billed number of a call to eliminate fraud. The filtering also makes sure that automation of the wrong calls does not occur. These calls can be calls to areas where speech recognition is less accurate. This functionality applies to fully automated AABS calls and calls an operator hands off to AABS.

Operation

The operation of AABS Call Screening appears in the following paragraphs.

AABS Call Screening (continued)

Terminating code screening background

Terminating code screening provides screening of calling card calls that originate from coin phones and route through ACCS/MCCS. The screening is applied if the calling party or the operator enters the call.

To determine the type of call screening, the system checks the called number to determine if the number is domestic or country. The system checks Table OVSBILL for overseas calls. The system checks Table DOMBILL for domestic calls. Both tables have a Calling Card Screening (CCSCRN) field. When this field contains a Y, the system must check the calls to that country or region for screening. If the country or region must be screened, then the system checks Table TERMSCRN for the calling number. If the calling number matches a number in the table, the call routes to an operator. The system identifies the calls as compromised. When the system marks a call as compromised, an alternate method of billing is necessary to complete the call. Refer to TOPS Terminating Code Screening in EABS Canada, ABS00101.

Compromised call override

When a call routes to an operator, or remains at an operator marked as compromised, the call cannot complete. The operator obtains an alternate method of billing. The operator can override the blocking of call completion. To perform this action, the operator marks the call as a no charge. The operator takes a manual ticket.

In Table VSNOPT, new parameter OPR_COMPROMISED_CALL_OVERRIDE is added to allow the operators to complete compromised calls and not change billing. The operator can set the parameter to Y (ON) or N (OFF). If the operator sets the parameter to Y, the operator can complete the call and not change billing. This event occurs when a call is marked as compromised and routes to an operator. The operator must obtain an alternate form of billing to complete a compromised call when one of two conditions occur. These conditions are the parameter is not present or the operator set the parameter to N.

Domestic ACCS/MCCS calls

The system screens ACCS/MCCS domestic calls billed to a calling card that originate from a coin or restricted telephone. The system checks Table DOMBILL for the called region. If the called region is present in the table, then the system marks CCSCRN field for the called region to mark with a Y. The Y implies that the system must screen this region for calling card calls. If screening is not necessary for this region, then the system searches Table TERMSCRN for the calling number. If the calling number is present in Table TERMSCRN, the system marks the call as calling card compromised. The call

routes to an operator. If a call fails any test during the screening, the call completes without any further TOPS Terminating code screening.

Example Domestic ACCS Call with TOPS Terminating Code Screening Extended

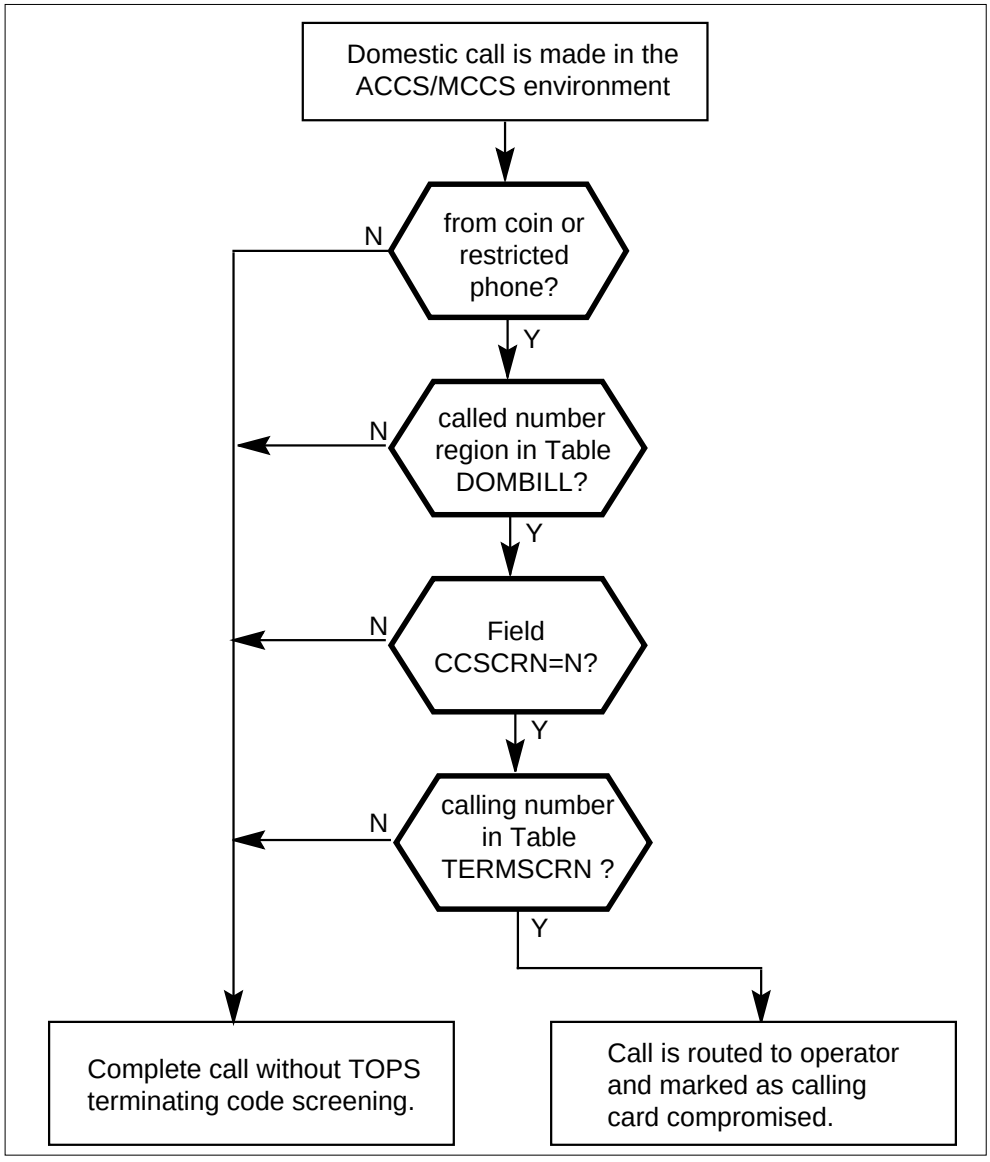

Overseas ACCS/MCCS calls

The system screens the ACCS/MCCS overseas calls billed to a calling card and from a coin or restricted telephone. The system checks Table OVSBILL for the called country. The system checks the CCSCRN field that corresponds to the called country if set to Y. The Y indicates that calling card screening is

AABS Call Screening (continued)

necessary for this country. If screening is necessary for this country, the system checks Table TERMSCRN for the calling number. If the calling number is present in Table TERMSCRN, the system marks the call as calling card compromised and routes the call to an operator.

AABS screening of collect and third number billed calls

The screening is on a billed type basis. Fields COLSCRN and THRDSCRN are added to Tables DOMBILL and OVSBILL for this purpose. A Y in these fields indicates the system screens the corresponding country/region for the specified type of billing.

For example, domestic calls can be marked as third number billing screened in Table DOMBILL, Field THRDSCRN = Y. Domestic calls cannot be marked calling card screened in Table DOMBILL, Field CCSCRN = N. Overseas calls can be third number billed screened in Table OVSBILL, Field THRDSCRN = Y. Overseas calls can be calling card screened in Table OVSBILL, Field CCSCRN = Y. Overseas calls cannot be collect screened in Table OVSBILL, Field COLSCRN = N.

The calling party or the operator can enter the billed number for calls. Calling party calls are 0+ calls and operator calls are 0- calls. The screening applies for both conditions and for both domestic and overseas AABS calls. Screening checks are applied after the following events:receiving the validation requests from a VSN, and after passing the normal AABS checks and qualifications, including the database queries.

- the validation requests from a VSN are received.
- the normal AABS checks and qualifications are passed.

These checks and qualifications include the database queries.

0+ Domestic AABS calls

The system can screen domestic AABS calls that the calling party dials. These calls originate from a coin or restricted telephone. The system performs this action to prevent fraudulent billing. The system can screen the collect, third number billed, and calling card billing types. The datafill in Table DOMBILL determines the type of billing to screen.

0+ domestic AABS calling card calls

After the call occurs, a VSN sends a validation request to the digital multiplex switch (DMS). If the AABS validation and database queries are completed, the system checks the called region in Table DOMBILL. If the region is in Table DOMBILL, the system checks the corresponding CCSCRN field for Y. The Y indicates that the system must screen this region for calling card calls. If the system must screen the region, the system searches Table TERMSCRN

for the calling number. If the calling number is in table TERMSCRN, the system marks the call compromised and routes the call to an operator.

The CCARD field in Table DOMBILL has priority over the CCSCRN field. For example, if the CCARD field is set to NONE, the calling card calls are not screened. The value NONE indicates that calling cards cannot be billed to calls to this region. Calling card calls to the billed region are not allowed. If the CCARD field is set to ALL, calling card calls are screened if the CCSCRN field contains a Y.

0+ domestic AABS collect calls

After the call occurs, a VSN sends a validation request to the DMS. If the AABS validation and database queries complete, the system checks the called region checked in table DOMBILL. If the region is in table DOMBILL, the system checks the corresponding COLSCRN field for Y. The system screens the region for collect calls if Y appears. The system searches table TERMSCRN for the calling number for the screened region. If the calling number is in table TERMSCRN, the system marks the call as compromised. The system routes the call to an operator.

The COLLECT field in Table DOMBILL has priority over the COLSCRN field. The DEN field does not allow collect calls. When the COLLECT field is set to DEN, the system does not screen the collect calls. This procedure does not occur because collect calls to the billed region are not allowed. If the COLLECT field is ALW and the COLSCRN field is Y, the system screens collect calls.

0+ domestic AABS third number billed calls

After the call occurs, a VSN sends a validation request to the DMS. If the usual AABS validation and database queries are complete, the system checks for the called region in table DOMBILL. If the region appears in Table DOMBILL, check the corresponding THRDSCRN field for Y. The Y indicates that the system must screen this region for third number billed calls. When this event occurs, the system searches table TERMSCRN for the calling number. If the calling number is in table TERMSCRN, the system marks the call as compromised. The system routes the call to an operator.

The THIRDNUM field in Table DOMBILL has priority over the THRDSCRN field. The NONE field indicates the system denies all billed to third numbers calls. When the THIRDNUM field is NONE, the system does not screen third number billed calls. Third number billed calls to the billed region are not allowed. The THIRDNUM field is ALL and the user sets THRDSCRN field to Y. When this condition occurs, the system applies third billed number call screening.

AABS Call Screening (continued)

0+ Overseas AABS calls

The 0+ overseas AABS call screening operates the same as 0+ domestic call screening. The difference is overseas calls use table OVSBILL, not table DOMBILL, to check for call screening of the specified call billed type. The fields in table OVSBILL relate to a called country. The fields in table DOMBILL relate to a called region. The AABS does not expect a VSN to successfully execute speech recognition on overseas calls. The AABS does not attempt to automate overseas collect calls.

Operator handled domestic calls

The system screens domestic calls handled by the operator to make sure fraudulent billing does not occur. The system can screen any of the following billing types:

- collect
- third number billed
- calling card

The type of billing screened depends on the datafill in table DOMBILL or OVSBILL.

The operator enters the station billing class and the system immediately applies the screening checks. The system implements the screening checks the same way as a fully automated call. If all the checks pass, the call completes. If the checks do not pass, the completion attempt fails and the call remains with the operator.

The following is a call example.

1. The customer dials 0.
2. The call routes to an operator.
3. The operator asks the calling party for direction.

4. The calling party responds and requests a collect call to NPA-NXX-XXXX.
5. The operator enters the called number and marks the call for collect billing. The system makes the following extended terminating code screening checks:
   - The system looks up the NPA-NXX of the called region in table DOMBILL.
   - The system finds the NPA-NXX. The system checks that the corresponding COLSCRN field is set to Y.
   - The system sets the field to Y. The system checks table TERMSCRN for the calling number.
   - The systems finds the calling number in table TERMSCRN. The system marks the call as compromised. The validation fails and the call remains at the operator.

Operator handled overseas calls

Operator handled overseas call screening works the same way as operator handled domestic call screening except for the following difference. Overseas calls use table OVSBILL and not table DOMBILL to check for the called country. Overseas calls use Table OVSBILL to check for the call screening indicator of the specified call billed type. The fields in Table OVSBILL relate to a called country. The fields in table DOMBILL relate to a called region.

Filtering calls according to billed numbers

Before AABS call screening, some AABS collect and third number billed calls routed to an operator. These calls had a billed number value of MANUAL in table CCVPARMS. This feature makes these calls AABS candidates. The leading digits of the billed number can determine how AABS collect and third number billed calls are screened. The NPA-NXX of the billed number normally determines how calls are screened.

Two different types of screening are available.

- The billed number in Table CCVPARMS has a VALTYPE value of MANUAL. When this condition occurs, the system screens AABS collect and third number billed calls that originate from public telephones. This procedure can help make sure fraudulent billing does not occur.
- The system can screen AABS collect and third number billed calls that originate from both public and private telephones. This event occurs when the billed number is not involved in an automated call. Bad voice quality can impair the use of speech recognition. The system uses this screen when the billed number is in an area where bad voice quality occurs.

AABS Call Screening (continued)

The usual validation checks must pass before the system can filter the calls. The system checks the billed number in Table CCVPARMS. If the QUERYNAM field is not MANUAL, the database queries must pass. A check of Table CCVPARMS for a value of MANUAL checks for possible fraudulent billing. This check occurs before filter checks are activated. Billed numbers normally validated manually are screened for fraud and do not go directly to an operator.

The Table AABSFILT facilitates these capabilities. This table contains two fields. The first field is a billed number field that contains the number to screen. This number is normally the NPA-NXX of the billed number. The second field is a SCRNFOR field. This field signifies the reason for the screening, for example, PFRAUD, BADVOICE BOTH. The parameter AABS_FRAUD_FILT in table VSNOPT allows the fraudulent billing filtering to switch on and off.

The first digits of a billed number, or the entire number, can be added to Table AABSFILT. This procedure allows the system to screen that billed number on AABS calls. For example, only the NPA can be added to Table AABSFILT. When AABS calls are billed to numbers that start with that same NPA, the system screens these calls.

The first digits of billed numbers frequently used in fraudulently billed calls can be added to Table AABSFILT. The SCRNFOR field must be PFRAUD for potential fraud. The field can be set to BOTH if BADVOICE is currently set. The first digits of billed numbers that constitute areas of poor voice quality can be added to Table AABSFILT. The SCRNFOR field must be set to BADVOICE. The field can be set to BOTH if PFRAUD is currently set.

This screening applies to both fully automated AABS calls and to calls handed off to AABS.

Fully automated AABS calls

The system can screen 0+ AABS calls made from public phones for fraudulently billed numbers and billed numbers not appropriate for automation. The system screens 0+ AABS calls made from private phones for billed numbers that are not appropriate for automation. After the call occurs, the system checks table AABSFILT for the beginning portion of the billed number. If a match is present in the table, the call is checked to determine if the origin is a public phone.

- The VALTYPE in table CCVPARMS that corresponds to the billed number is MANUAL. When this event occurs, and the call originates from a public telephone, the system checks the VSN parameter AABS_FRAUD_FILT. The system checks if fraud filtering is activated. If fraud filtering is

AABS Call Screening (continued)

activated, the system checks the SCRNFOR field for one of the three screening options, PFRAUD, BADVOICE or BOTH. The VALTYPE field of Table CCVPARMS is not MANUAL or AABS_FRAUD_FILT is not set to Y. When this condition occurs, the system checks the SCRNFOR field for BADVOICE or BOTH.

- If the call did not originate from a public telephone, check the SCRNFOR field for BADVOICE or BOTH.

If the above conditions do not occur, the call completes without AABS call filtering based on the billed number. If the screening options the system checked are set, the call routes to an operator. The system routes the call with the use of present AABS displays. The display that appears when the customer times out of an AABS call is the same AABS display the operators see.

The following is a call example from a private telephone.

1. A 0+ collect or third number billed potential AABS call is made from a private phone.
2. The VSN issues a billed number validation request.
3. The system checks Table AABSFILT to match the billed number.
4. The NPA-NXX is present in Table AABSFILT.
5. The system checks the call to determine if the call is from a public telephone.
6. The call is not from a public telephone. The system checks the SCRNFOR field to determine if the field contains BADVOICE or BOTH.
7. The SCRNFOR field is BOTH. The system routes the call to an operator.

The following is a call example from a public telephone.

1. A 0+ collect or third number billed potential AABS call is made from a public telephone.
2. The VSN issues a billed number validation request.
3. The system checks Table AABSFILT for a billed number match.
4. The NPA-NXX is present in Table AABSFILT.
5. The system checks the call to determine if the call is from a public telephone.
6. The call is from a public telephone. The system checks the VALTYPE field of table CCVPARMS to determine if the field contains MANUAL.
7. The VALTYPE field is MANUAL. The system checks VSN parameter AABS_FRAUD_FILT to determine if the fields contains Y.

AABS Call Screening (continued)

8. The AABS_FRAUD_FILT contains Y. The system checks SCRNFOR field to determine if the field contains PFRAUD, BADVOICE or BOTH. The system checks for values other than NONE.
9. The SCRNFOR field is PFRAUD. The system routes the call to an operator.

AABS Handoff calls

Operator handled calls handed off to AABS qualify for AABS filtering based on billed numbers. A call is at the position of the operator. When the operator class charges the call and marks the call for handoff, the system searches table AABSFILT for a billed number match. If a match is present in Table AABSFILT, the system checks the VSN parameter AABS_FRAUD_FILT for Y. If the VSN parameter is on or set to Y, the system checks the call to determine if the call originates from a public telephone. If the call originates from a public telephone, the system checks field SCRNFOR for PFRAUD, BADVOICE or BOTH. The system checks for values other than NONE. If the call does not originate from a public telephone, the system checks the SCRNFOR field for BADVOICE or BOTH. If the AABS_FRAUD_FILT VSN parameter is N, the system checks the SCRNFOR field for BADVOICE or BOTH. If the SCRNFOR field contains BADVOICE or BOTH, the AABS handoff attempt fails and the call remains at the operator. If BADVOICE or BOTH are not present, the call completes and AABS filtering based on billed numbers does not occur.

The following is a call example not from a public telephone.

1. A potential AABS call is at an operator.
2. The operator class charges the call SPL number billed
3. The system checks table AABSFILT to determine if a billed number match is present.
4. The NPA-NXX is present in table AABSFILT
5. The system checks the call to determine if the call is from a public telephone:
   - The call is not from a public telephone. The system checks the SCRNFOR field for BADVOICE or BOTH.
   - The SCRNFOR field is BADVOICE. The AABS handoff attempt fails and the call remains with the operator.

The following is a call example from a public telephone.

1. A potential AABS call is at an operator.
2. The operator class charges the call SPL number billed.

3. The system checks Table AABSFILT for a billed number match.
4. The NPA-NXX is present in Table AABSFILT.
5. The system determines if the call is from a public telephone.
6. The call is from a public telephone. The system checks VSN parameter AABS_FRAUD_FILT for Y.
7. The AABS_FRAUD_FILT is N. The system checks the SCRNFOR field for BADVOICE or BOTH.
8. The SCRNFOR field is PFRAUD. The call continues without the AABS filtering feature implemented.

The call originates from a public telephone and the SCRNFOR field is PFRAUD. The AABS filtering of this feature was not implemented because the VSN parameter had the filtering on a fraud basis deactivated.

Feature Activation

The system automatically activates the installation of this package and the datafill that corresponds. Tables DOMBILL, OVSBILL and TERMSCRN relate to TOPS Terminating Code Screening. Table AABSFILT relates to billed number filtering. The VSN parameter is used to turn billed number filtering for fraud on and off.

Some offices have Tables DOMBILL and OVSBILL but not the package that corresponds. These offices cannot change the COLSCRN or THRDSCRN fields from the default of N to Y.

Feature Deactivation

For TOPS Terminating Code Screening and the extensions to deactivate, the calling number can be removed from Table TERMSCRN. The COLSCRN and THRDSCRN fields in Tables DOMBILL and OVSBILL are N. When these fields contain N, the system does not apply that type of screening.

To deactivate AABS filtering based on billed number, remove the billed number or partial billed number from Table AABSFILT. The SCRNFOR field of the number to deactivate is NONE. This procedure removes the tuple.

To deactivate all AABS filtering for fraud based on billed number, the VSN parameter AABS_FRAUD_FILT is N.

A billed number that is not appropriate for automation can have AABS filtering turned off. To perform this action, the SCRNFOR field must change or the number from Table AABSFILT must be removed.

AABS Call Screening (continued)

Datafill

The following is a list of datafill tables.

- Table DOMBILL

  Provides screening for domestic calls. Fields COLSCRN and THRDSCRN are added.

- Table OVSBILL

  Provides screening for overseas calls. Fields COLSCRN and THRDSCRN are added.

- Table TERMSCRN

  If calling number is in Field CLGNUM, the system marks the call as compromised. A compromised call requires alternate billing before the call can complete.

- Table TOPSPARM

  — parameter OPR_COMPROMISED_CALL_OVERRIDE

  This new parameter allows the operator to complete a compromised call and not obtain an alternate form of billing.

- Table VSNOPT

  — parameter AABS_FRAUD_FILT

  This parameter enables AABS filtering for fraud based on billed number.

- Table CCVPARMS

  The AABS collect and third number billed calls with Field VALTYPE = MANUAL are screened with Table AABSFILT.

- Table AABSFILT

  This table filters calls based on the billed number.

Translations table flow

The AABS Call Screening does not have a translations table flow.

Limits

AABS Call Screening has no limits.

Interactions

The interactions between AABS Call Screening and other functionalities appear in the following paragraphs.

AABS Call Screening (continued)

In some instances, feature NC0298 AABS/ACCS Call Screening, interrupts the completion of AABS and ACCS/MCCS. The feature sends the call to an operator to perform this action. This feature can interrupt completion of calls and not allow the operator to hand off the call to AABS.

Activation/deactivation by the end user

The AABS Call Screening does not require activation or deactivation by the end user.

Billing

This feature affects module 052 - Alternate Billing, and module 061 - Bimodality Alternate Billing. Table 291 records the Operator Services System Action. When the system marks a call compromised, and the operator obtains alternate billing and completes the call, the following events occur. The operator action is identified as verified-accepted. If the compromised call was not completed, the action is identified as verified-rejected. This condition applies to calls that are filtered based on the billed number.

Station Message Detail Recording

The AABS Call Screening does not affect Station Message Detail Recording.

Datafilling office parameters

The AABS Call Screening does not affect office parameters.

Datafill sequence

The tables that require datafill to implement AABS Call Screening appear in the following table. The tables appear in the correct entry order.

Datafill requirements for AABS Call Screening

Table	Purpose of table
OVSBILL	Screening of overseas calls.
DOMBILL	Screening of domestic calls.
CCVPARMS	Indicates AABS collect and third number billed calls for Table AABSFILT to screen.
VSNOPT	Voice Service Node Options. This table contains the parameters the Traffic Operator Position System (TOPS) Automated Alternate Billing Service (AABS) require with use of the voice service mode (VSN).
TERMSCRN	Lists calling numbers that require alternate billing.

AABS Call Screening (continued)

Datafill requirements for AABS Call Screening

Table	Purpose of table
AABSFILT	Filters calls based on the billed number.
TOPSPARM	Contains terminating screening parameters.

Datafilling table OVSBILL

Datafill for AABS Call Screening for table OVSBILL appears in the following table. The fields that apply to AABS Call Screening appear in this table. For a description of the other fields, refer to the data schema section of this document.

Enter data into Table OVSBILL to screen overseas calls.

Datafilling table OVSBILL

Field	Subfield or refinement	Entry	Explanation and action
COLSCRN		Y or N	Screen AABS collect calls. Enter Y or N.
THRDSCRN		Y or N	Screen AABS third number billed calls. Enter Y or N.

Datafill example for table OVSBILL

Sample datafill for table OVSBILL appears in the following example.

MAP example for table OVSBILL

```
COUNTRY COLLECT PER  THIRDOK CCSCRN COL   THRD
                ONLY                SCRN  SCRN
-------------------------------------------------------
FRANCE    PER    Y      N      Y      Y     Y
```

Datafilling table DOMBILL

Datafill for AABS Call Screening for table DOMBILL appears in the following table. The fields that apply to AABS Call Screening appear. For a description of the other fields, refer to the data schema section of this document.

Enter data into Table DOMBILL to screen domestic calls.

Datafilling table DOMBILL

Field	Subfield or refinement	Entry	Explanation and action
COLSCRN		Y or N	Screen AABS collect calls. Enter Y or N.
THRDSCRN		Y or N	Screen AABS third number billed calls. Enter Y or N.

Datafill example for table DOMBILL

Sample datafill for table DOMBILL appears in the following example.

MAP example for table DOMBILL

```
REGION COLLECT PER  THIRD CCARD CCSCRN COL   THRD
               ONLY  NUM               SCRN  SCRN
-------------------------------------------------------
MEXICO   ALW    N    NONE  ALL   N      Y     Y
```

Datafilling table CCVPARMS

The datafill for AABS Call Screening for table CCVPARMS appears in the following table. The fields that apply to AABS Call Screening appear. For a description of the other fields, refer to the data schema section of this document.

Enter data into Table CCVPARMS to list AABS collect and third number billed calls for table AABSFILT to screen.

Datafilling table CCVPARMS

Field	Subfield or refinement	Entry	Explanation and action
BILLNUM		Billing number	Billing number.
VALAREA		see subfield	Validation area. This field contains subfield VALTYPE.
	VALTYPE	MANUAL	Validation type. Enter MANUAL to cause screening of collect and third number billed calls in table AABSFILT.

AABS Call Screening (continued)

Datafill example for table CCVPARMS

Sample datafill for table CCVPARMS appears in the following example.

MAP example for table CCVPARMS

```
 IDX      VALAREA
-------------------------------------------------------
   0       MANUAL
   1       MANUAL
   2       MANUAL
```

Datafilling table VSNOPT

The datafill for AABS Call Screening for table VSNOPT appears in the following table. The fields that apply to AABS Call Screening appear in the table. For a description of the other fields, refer to the data schema section of this document.

Datafilling table VSNOPT

Parameter name	Explanation and action
AABS_FRAUD_FILT	Enable/disable fraudulent billing filtering. Enter Y (on) or N (off). Default is Y.

Datafill example for table VSNOPT

Sample datafill for table VSNOPT appears in the following example.

MAP example for table VSNOPT

```
PARM                                          VALUE
-----------------------------------------------------
AABS_FRAUD_FILT                                 Y
```

Datafilling table TERMSCRN

The datafill for AABS Call Screening for table TERMSCRN appears in the following table. The fields that apply to AABS Call Screening appear in the table. For a description of the other fields, refer to the data schema section of this document.

Enter data in table TERMSCRN to list calling numbers that require alternate billing.

Datafilling table TERMSCRN

Field	Subfield or refinement	Entry	Explanation and action
CLGNUM		Calling number	Calling number that requires alternate billing.

Datafill example for table TERMSCRN

Sample datafill for table TERMSCRN appears in the following example.

MAP example for table TERMSCRN

```
CLGNUM
------------------------------------------------------
416654
613555111
```

Datafilling table AABSFILT

The datafill for AABS Call Screening for table AABSFILT appears in the following table. The fields that apply to AABS Call Screening appear in the table. For a description of the other fields, refer to the data schema section of this document.

Enter data into table AABSFILT to filter calls based on the billed number.

Datafilling table AABSFILT

Field	Subfield or refinement	Entry	Explanation and action
BILLNUM		1-18 digits	Portion of billing number to screen. Enter 1-18 digits.
SCRNFOR		PFRAUD, BADVOICE, BOTH, or NONE	Reason for screening. Enter PFRAUD, BADVOICE, BOTH, or NONE.

Datafill example for table AABSFILT

Sample datafill for table AABSFILT appears in the following example.

AABS Call Screening (end)

MAP example for table AABSFILT

```
BILLNUM       SCRNFOR
-------------------------------------------------------
354011         BOTH
354012         PFRAUD
```

Datafilling table TOPSPARM

The datafill for AABS Call Screening for table TOPSPARM appears in the following table. The fields that apply to AABS Call Screening appear in the table. For a description of the other fields, refer to the data schema section of this document.

Datafilling table TOPSPARM

Parameter name	Explanation and action
OPR_COMPROMISED_CALL_OVERRIDE	Allows operator to complete compromised calls and not change the billing. Set to Y (on) or N (off). Default is N.

Datafill example for table TOPSPARM

Sample datafill for table TOPSPARM appears in the following example.

MAP example for table TOPSPARM

```
PARMNAME                                      PARMVAL
-----------------------------------------------------
OPR_COMPROMISED_CALL_OVERRIDE                       Y
```

Tools for verifying translations

The AABS Call Screening does not use translation verification tools.

SERVORD

AABS Call Screening does not use SERVORD.

AABS Enhanced Services Access

Ordering codes

Functional group ordering code: ABS00101

Functionality ordering code: not applicable

Release applicability

BCS36 and later versions

The AABS Enhanced Services Access was introduced in BCS36.

Requirements

The operation of AABS Enhanced Services Access requires the following functional groups:

- Operator Services Basic, OSB001O1, and table TOPSFTR parameter TOPS_ON_OFF_SWITCH = Y
- Automated Alternate Billing Service, ABS00101
- QMS Host/Remote Queueing, OSB00101

Description

The following features provide this functionality:

Feature number	Feature name
AF5009	TOPS Enhancements for MDS

Note: Feature AF5009 is a Canada only feature. The tables and fields this feature affects appear in United States offices. The switch cannot use these tables. Data cannot be entered in these tables in the switch. These tables and fields are limited to a market specific application. Refer to the limits section for more details.

AABS Enhanced Services Access (continued)

Feature TOPS Enhancements for Message Delivery System (MDS) intercepts and routes the following calls. The MDS routes these calls to an automated or live message delivery system (MDS) agent.

- Calling card billed calls
  - — 0+ automated through AABS
  - — Sequence calls
- Third party billed calls
  - — 0+ calls automated through AABS
  - — Operator calls billed to a third number and handed off to AABS
- Station collect calls
  - — 0+ calls automated through AABS
  - — Operator calls billed station collect and handed off to AABS.

Operation

MDS description

The MDS intercepts calls that are not complete and offers a message delivery service to the calling party. This service provides an alternative when the following events occur:

- The caller tries and fails to get through.
- The caller is in transit and too busy to try again.
- The caller needs to reach a particular individual.

The MDS services the customers with a need to send a message as follows:

- The caller knows that no one is available to answer.
- Time zones interfere with communications.
- The caller prefers to keep the message brief.
- The caller wants to send one message to many persons.

To provide MDS to the 0+/0- caller, the Voice Service Node (VSN) must be able to offer the service to the subscriber. The DMS monitors the following calls:

- collect calls
- calling card calls
- third number billed calls for the subscribers actions the MDS is offered

Note, for international dialling, 0+ refers to operator assisted (OA) and 0- refers to operator handled (OH).

In the first offer, live operators at TOPS MP positions with OIA connectivity and automated operators that use the Open Position Protocol (OPP) provide MDS. This method of application leads to actions between the DMS and VSN which appear later.

MDS call steps

The following are the steps for a general (station special) MDS call:

1. Start with AABS:

   The installed Automated Alternate Billing Service (AABS) base is the platform to offer MDS to a 0+/0- caller. A call can route to AABS as a 0+ call or a handoff from an operator.

2. Offer MDS:

   For a calling card or third number call, the VSN attempts to get billing acceptance. If billing is successful, the VSN offers MDS to the subscriber and floats the call to the DMS.

3. Monitor for MDS acceptance:

   If a receiver is not already attached, the DMS attaches a DTMF receiver. The DMS monitors for a * (transfer to automated MDS), 0 or hookflash. The hookflash is a transfer to a live MDS operator for 0 or hookflash. The subscriber can choose to accept MDS while the DTMF receiver connects.

4. Transfer to MDS:

   If an action occurs, the subscriber routes through the Queue Management System (QMS) to the correct live (0 or flash) or automated (`*') MDS operator.

The following are the steps for a collect call:

1. Offer MDS:

   For a collect call, the VSN offers MDS and makes an attempt to connect the called party.

2. Monitor for MDS acceptance:

   The VSN requests that the DMS attach a receiver and monitor for a * (transfer to automated MDS), 0 or hookflash (transfer to a live MDS

AABS Enhanced Services Access (continued)

operator for either 0 or hookflash). The DMS reports any subscriber key action to the VSN.

3. Transfer to MDS:

   If the subscriber accepts MDS, the VSN requests an operator from the DMS. The call routes through QMS to the correct live or automated MDS operator. When the call is at an MDS operator, the call can transfer between the automated and live operators. For example, the automated operator can transfer to a live operator if the subscriber pressed 0 or flash. A live operator can transfer the call to the automated system for completion.

MDS selection datafill

You must enter data in the following tables to select MDS. You must enter data in QMS tables for MDS operation. The datafill section has complete coverage of table datafill for MDS.

- TOPSLANG (current)
- MDSLANG (new)
- MDSACTN (new)
- TOPSPARM (current)

The call flows for calling card, third number, and collect calls appear to describe the necessary tables and the functions of the tables.

Calling card and third number call example

After the VSN has billing acceptance for the call, the VSN decides if the VSN offers MDS. The VSN selects a language entry from table TOPSLANG, field LANGNAME. Sample datafill for table TOPSLANG appears in the following example.

MAP example for table TOPSLANG

```
LANGDIGT    LANGNAME      AUTOLANG
_____________________________________
   17          ENG          Y 1
   19          FRE          Y 2
   26          MDS          Y 3
   27          MEN          Y 4
   29          MFR          Y 5
   36          MOP          Y 6
   37          MOE          Y 7
   39          MOF          Y 8
```

AABS Enhanced Services Access (continued)

Definitions for entries in field LANGNAME that indicate MDS acceptance to the DMS appear in the following example.

Table TOPSLANG, field LANGNAME value definitions

LANGNAME	Definition
ENG, FRE	Language AABS and operators use when MDS is not involved.
MDS	Auto MDS involved, actual language is not known.
MEN	Auto MDS involved, actual language is ENG.
MFR	Auto MDS involved, actual language is FRE.
MOP	Live MDS operator involved, actual language is not known.
MOE	Live MDS operator involved, actual language is ENG.
MOF	Live MDS operator involved, actual language is FRE.

For this example, if the VSN offers MDS to the subscriber, the language the VSN sends will be MDS, MEN, or MFR. The DMS looks for one of these 3 languages in table MDSLANG. Sample datafill appears in the following example.

MAP example for table MDSLANG

```
LANGNAME     MONITOR
_____________________
   MDS          Y
   MEN          Y
   MFR          Y
   MOP          N
   MOE          N
   MOF          N
```

Entry of one of these languages means the DMS looks at field MDSMON to determine if the DMS monitors for subscriber actions.

If the VSN does not offer MDS, the language sent is ENG or FRE. If the language is not known, the VSN sends nil. If the language is not present in table MDSLANG, monitoring defaults to N.

At this point, the DMS monitors a calling card call that was offered MDS. The DMS waits for a *, 0, or flash. If the subscriber takes one of these actions, the DMS uses this action and the language that passes from the VSN to index to

AABS Enhanced Services Access (continued)

table MDSACTN, fields OLDLANG and ACTION. The result is the final language, field NEWLANG routes to the correct operator (live or automated) through QMS. The operator can be live or automated. Sample datafill for table MDSACTN appears in the following example.

MAP example for table MDSACTN

```
OLDLANG      ACTION    NEWLANG
_____________________________
   MDS         STAR      MDS
   MDS         ZERO      MOP
   MDS         FLASH     MOP
   MEN         STAR      MEN
   MEN         ZERO      MOE
   MEN         FLASH     MOE
   MFR         STAR      MFR
   MFR         ZERO      MOF
   MFR         FLASH     MOF
```

On coin calls, when the subscriber reaches the agent, the agent references table TOPSPARM. The agent can be live or automated. The reference determines if the subscribers keypad must be enabled. When the keypad is enabled an automated MDS operator can accept digitone key entries during MDS link. If the call queue profile number of the agent is entered as the value for parameter AUTO_MDS_QMS_CQPROF, the keypad is enabled. If the call queue profile number of the agent is not entered, the keypad disables. Sample datafill for table TOPSPARM appears in the following example.

MAP example for table TOPSPARM

```
PARMNAME                    PARMVAL
_____________________________________
AUTO_MDS_QMS_CQPROF          Y  30
```

Collect call example

If the VSN offers MDS for a collect call, the VSN requests that the DMS attach a DTMF receiver. The VSN requests that the DMS monitors for the action of subscriber. The DMS passes any key action to the VSN through the AABS protocol. If the subscriber presses * , the VSN sends language MDS, MEN, or MFR to the DMS in a request operator message. If the subscriber presses 0 or flash, the VSN sends language MOP, MOE, or MOF to the DMS. This language is in use through QMS to route to an operator. At this point, the DMS does not use table MDSACTN or field MDSMON in table MDSLANG because the system has already monitored for MDS selection. If the call is a

coin call, the DMS uses parameter AUTO_MDS_QMS_CQPROF in table TOPSPARM. This parameter determines whether to enable the keypad on presentation to the MDS operator.

Transfers

For transfers between the automated system and a live operator, parameter AUTO_MDS_QMS_CQPROF enables the keypad for calls that go to an automated operator. To transfer from an automated to a live operator, the automated operator enters the correct language and transfers. The route to live operators is by language. To transfer from a live operator to an automated operator, the live operator transfers the call. The route to an automated operator is not selected by language.

QMS datafill

To implement the complete message delivery service that includes attendant backing and query services, MDS requires the use of TOPS QMS. The TOPS QMS allows a TOPS office to segregate the traffic across a large number of call queues. The MDS uses the language requirements to segregate calls between the capture and attendant services. The capture services operate with an automated operator. The attendant services operate with a live operator. The datafill examples include the third service, delivery. The delivery section of MDS is the periodic attempt to deliver the message to the called party. The TOPS QMS provides call transfer capability. This capability enables calls to transfer from live attendant positions to an automated MDS position, and back. Calls that transfer from AABS can transfer to the automated MDS or to a live MDS attendant. The transfer modifies the language associated with the call. Every operator agent, automated and live, must be entered as QMS agents.

The TOPS QMS handles the queuing of two resources:

- Calls
- Agents (e.g. positions)

When a call originates, an agent that services that type of call is available to handle the call. If an agent is not available, the call is queued in the correct call queue. When an agent becomes available for that type of call, the system removes the call from the queue. The agent handles the call.

If an agent becomes available but there are no calls to handle, the agent is queued in an agent queue. This agent is available for the next call of that type.

To use QMS, the following must be defined:

- Which MDS call queues are available
- Which services an agent is capable of handling

AABS Enhanced Services Access (continued)

- Which call queue to assign a call
- Which agent queue to assign an agent
- Which agent queues are associated with which call queues

Sample datafill which addresses these considerations appear in the following list.

Translations table flow

The AABS Enhanced Services Access translations tables appear in the following list:

- Table TOPSLANG
- Table MDSLANG
- Table MDSACTN

The AABS Enhanced Services Access translation process appears in the following flowchart.

Table flow for AABS Enhanced Services Access

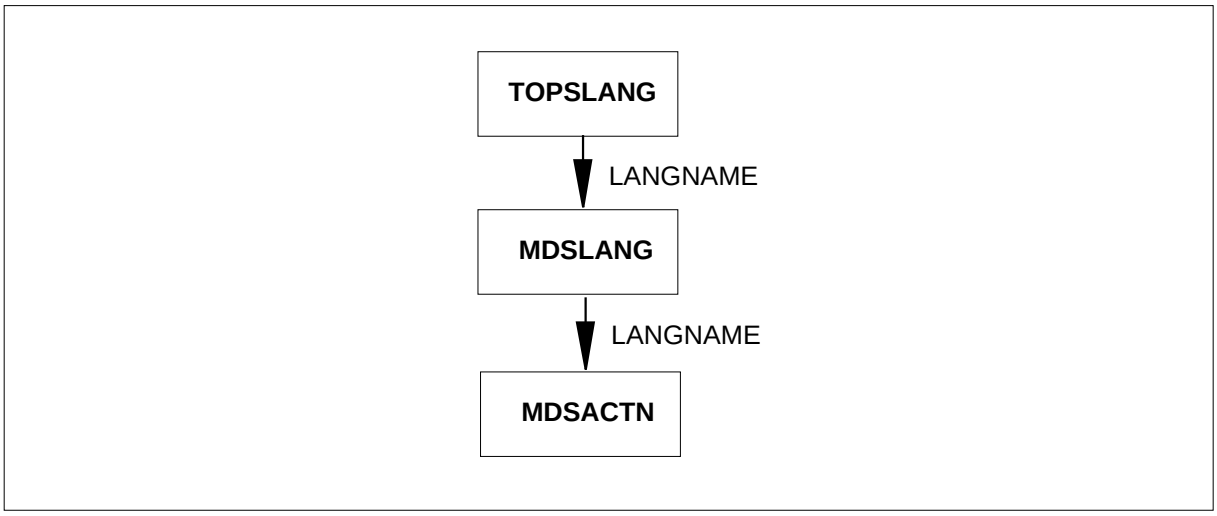

The following table lists the datafill content that appears in the flowchart.

Datafill example for AABS Enhanced Services Access

Datafill table	Example data
TOPSLANG	17 MDS Y 1

AABS Enhanced Services Access (continued)

Datafill example for AABS Enhanced Services Access

Datafill table	Example data
MDSLANG	MDS Y
MDSACTN	MDS STAR MDS

Limits

The AABS Enhanced Services Access has the following limits:

- This feature activity is for use in the Bell Canada network for a limited time period. Full-scale deployment of MDS to the complete North American, and possibly international, market requires the application of an automated services protocol. This application is currently being investigated.
- The MDS must be offered on for intralata calls so that equal access issues do not occur.
- For third number calls, a 3-port attaches during billing acceptance verification. If this 3-port cannot be freed when the call floats, the DMS does not monitor the call for MDS selection. This event can occur because direct network connection cannot be set up.
- Only calls that arrive on trunks designated QMSCAM, field acd_data, subfield acd in table TOPSTOPT qualify for MDS handling.

Interactions

The following paragraph describes interactions between AABS Enhanced Services Access and other functionalities.

The MDS uses the installed AABS, ABS00101, base.. The MDS uses QMS for call routing. This call routing requires QMS Host/Remote Queueing, OSB00101. The automated MDS operators require the use of OPP, package TOPS Open Position Protocol, OSB00101.

Activation/deactivation by the end user

When MDS is offered, the subscriber must enter an acceptable response before the subscriber leaves a message.

AABS Enhanced Services Access (continued)

Activation/deactivation of AABS Enhanced Services Access by the end user

At your telephone

1 Make a 0+ or 0- call.

Response:

```
Connected to AABS where billing is determined as calling
card, third number, or collect. If billing is accepted,
MDS is offered to the subscriber.
```

2 Enter *, 0, or hook-flash.

Response:

```
If * was entered, the call connects to an automated MDS
operator. If 0 or hook-flash is entered, the call connects
to a live MDS operator.
```

3 Leave voice message and hang up.

|Response:

```
The message records and passes to the intended party.
```

Billing

The AABS Enhanced Services Access does not affect billing.

Station Message Detail Recording

The AABS Enhanced Services Access does not affect Station Message Detail Recording.

Datafilling office parameters

The AABS Enhanced Services Access does not affect office parameters.

Datafill sequence

The tables that require datafill to implement AABS Enhanced Services Access appear in the following table. The tables are in the correct entry order.

Datafill requirements for AABS Enhanced Services Access

Table	Purpose of table
MDS selection	
TOPSLANG	Define language attributes for TOPS calls
MDSLANG	Enable MDS for a language
MDSACTN	Map old language to new language

AABS Enhanced Services Access (continued)

Datafill requirements for AABS Enhanced Services Access

Table	Purpose of table
TOPSPARM	Enable subscriber to request MDS
Services and position profiles	
TOPSPOS	Define operator positions
TQOPROF	Assign QMS call selection and service profiles to operator number
TQMSSERV	Name and define QMS services
TQSVPROF	Define service profiles
Call queue selection	
QMSTOPS	Initial QMS call queue assignment
CT4QNAMS	Define CT4Q names
CT4QCLAS	Modifiy CT4Q by class of service
CT4QLANG	Modifiy CT4Q by language
TQORDERA and TQORDERB	Define order of CT4Q refinement tables
TQMSFCQA	Assign final CT4Q
TQCQINFO	Assign service to final call queue
Agent queue and call queue relation	
TQCQPROF	Define call queue profiles
Transfers	
TQOGTKEY	Define QMS OGT keys
Force management	
TQFMNAMS	Define Force Management names
TQFMCT4Q	Define Force Management call types
Route to QMS	
TOPSTOPT	Define trunks for MDS handling. Datafill of this table activates the QMS system. Always datafill last.

AABS Enhanced Services Access (continued)

Datafilling table TOPSLANG

The TOPS Language (TOPSLANG) table defines a language attribute for TOPS calls. An operator keying action or an automated service assigns this language value to a call.

A reference to Table TOPSLANG occurs when TOPS calls change from the AABS Voice Service Node (VSN) to the DMS. Entry of the languages for the Message Delivery System must occur in TOPSLANG as auto-langs. The system adds a crosscheck to table control to prevent deletion of any language or an autolang status change to n. Entry of this crosscheck occurs in table MDSLANG or table MDSACTN.

The datafill for AABS Enhanced Services Access for table TOPSLANG appears in the following table. Only the fields that apply directly to AABS Enhanced Services Access are shown. Refer to the *Data Schema* section of this manual for a description of the other fields.

Field	Subfield or refinement	Entry	Explanation and action
LANGNAME		ENG, FRE, SPA, JAP. or TAI.	Language that AABS and operators use when MDS is not involved.
		MDS	Auto MDS involved, actual language is not known.
		MEN	Auto MDS involved, actual language is ENG.
		MFR	Auto MDS involved, actual language is FRE.
		MOP	Live MDS operator involved, actual language is not known.
		MOE	Live MDS operator involved, actual language is ENG.
		MOF	Live MDS operator involved, actual language is FRE.

Datafill example for table TOPSLANG

Sample datafill for table TOPSLANG appears in the following table.

MAP example for table TOPSLANG

```
LANGDIGT     LANGNAME       AUTOLANG
_____________________________________
   17           ENG            Y 1
   19           FRE            Y 2
   26           MDS            Y 3
   27           MEN            Y 4
   29           MFR            Y 5
   36           MOP            Y 6
   37           MOE            Y 7
   39           MOF            Y 8
```

Error messages for table TOPSLANG

The following error messages apply to table TOPSLANG.

Error messages for table TOPSLANG

Error message	Explanation and action
LANGUAGE MUST FIRST BE DELETED FROM TABLE MDSLANG TUPLE/TUPLES. LANGUAGE MUST FIRST BE DELETED FROM TABLE MDSACTN TUPLE/TUPLES.	If an attempt to delete a language that appears in table MDSLANG or MDSACTN occurs, one or both of these messages appear.
LANGUAGE MUST REMAIN AS AN AUTOLANG OR FIRST BE DELETED FROM TABLE MDSLANG TUPLE/TUPLES. LANGUAGE MUST REMAIN AS AN AUTOLANG OR FIRST BE DELETED FROM TABLE MDSACTN TUPLE/TUPLES.	An attempt to change the autolang status to N, of a language that appears in table MDSLANG or MDSACTN, means both of these messages appear.

Datafilling table MDSLANG

A reference to the TOPS Message Delivery System Language (MDSLANG) table occurs when TOPS calls change from the AABS Voice Service Node (VSN) to the DMS.

The datafill for AABS Enhanced Services Access for table MDSLANG appears in the following table. Only the fields that apply directly to AABS

AABS Enhanced Services Access (continued)

Enhanced Services Access appear in the table. Refer to the *Data Schema* section of this manual for a description of the other fields.

Datafilling table MDSLANG

Field	Subfield or refinement	Entry	Explanation and action
LANGNAME		MDS, MEN, MFR, MOP, MOE, MOF. or MAP.	Language name that must be entered in table TOPSLANG as an AUTOLANG.
MONITOR		Y or N	MDS monitor. Must the DMS monitor for MDS acceptance? If a tuple is not present for a certain language, field MONITOR defaults to N.

Datafill example for table MDSLANG

Sample datafill for table MDSLANG appears in the following example.

MAP example for table MDSLANG

```
LANGNAME     MONITOR
_____________________
   MDS           Y
   MEN           Y
   MFR           Y
   MOP           N
   MOE           N
   MOF           N
```

Error messages for table MDSLANG

The following error messages apply to table MDSLANG.

Error messages for table MDSLANG

Error message	Explanation and action
LANGNAME ENTRY MUST BE SPECIFIED AS AN AUTOLANG IN TABLE TOPSLANG.	If an attempt to datafill a language that is not entered in table TOPSLANG as an autolang occurs, this message appears.

AABS Enhanced Services Access (continued)

Datafilling table MDSACTN

A reference to the TOPS MDS Actions (MDSACTN) table occurs after a call changes from the AABS Voice Service Node (VSN) to the DMS and the DMS has detected subscriber input.

The datafill for AABS Enhanced Services Access for table MDSACTN appears in the following table. Only the fields that apply directly to AABS Enhanced Services Access appear in the table. Refer to the *Data Schema section of this manual* for a description of the other fields.

Datafilling table MDSACTN

Field	Subfield or refinement	Entry	Explanation and action
OLDLANG		MDS, MEN, MFR, MOP, MOE, MOF. or MAP.	Old language. The language that associates with the autolang number sent from VSN. The language entered must be entered in table TOPSLANG as autolang. If a tuple is not present for a certain language, the NEWLANG that results is the same as the OLDLANG. This condition indicates that a change to the language does not occur.
ACTION		STAR, ZERO, or FLASH.	Subscriber action. The ACTION field contains the subscriber actions that are allowed. If the subscriber performs one of these actions, the NEWLANG field determines which language QMS uses to route the call to the correct MDS position. If the subscriber action performs an action for which a corresponding tuple in the table is not present, the NEWLANG that results is the same as the OLDLANG. This condition indicates that a change to the language does not occur.
NEWLANG		MDS, MEN, MFR, MOP, MOE, MOF. or MAP.	New language. The language that QMS uses to route to the proper operator queue (live or auto). The language entered must be entered in table TOPSLANG as autolang.

Datafill example for table MDSACTN

Sample datafill for table MDSACTN appears in the following example.

AABS Enhanced Services Access (continued)

MAP example for table MDSACTN

```
OLDLANG      ACTION    NEWLANG
_____________________________
   MDS         STAR      MDS
   MDS         ZERO      MOP
   MDS         FLASH     MOP
   MEN         STAR      MEN
   MEN         ZERO      MOE
   MEN         FLASH     MOE
   MFR         STAR      MFR
   MFR         ZERO      MOF
   MFR         FLASH     MOF
```

Error messages for table MDSACTN

The following error messages apply to table MDSACTN.

Error messages for table MDSACTN

Error message	Explanation and action
LANGNAME ENTRY MUST BE SPECIFIED AS AN AUTOLANG IN TABLE TOPSLANG.	If an attempt is made to enter a language that is not entered in table TOPSLANG as an autolang, this message appears.

Datafilling table TOPSPARM

A reference to the TOPS Parameter table (TOPSPARM) occurs when a coin call is presented to a QMS operator.

The datafill for AABS Enhanced Services Access for table TOPSPARM appears in the following table. Only the fields that apply directly to AABS

Enhanced Services Access appear in the table. Refer to the *Data Schema* section of this manual for a description of the other fields.

Datafilling table TOPSPARM

Parameter	Explanation and action
AUTO_MDS_QMS_CQPROF	This parameter determines if the subscribers keypad must be enabled to request MDS service. Y and the call queue profile number of the operator can be entered as the parm value. The origination station is a coin phone. These events enables the subscribers keypad. Entry of N disables the subscribers keypad. Because the default is N, datafill Y xx, where xx is the desired call queue number.

Datafill example for table TOPSPARM

MAP example for table TOPSPARM

```
PARMNAME                    PARMVAL
_____________________________________
AUTO_MDS_QMS_CQPROF          Y  30
```

Datafilling table TOPSPOS

Table TOPSPOS defines the position to the DMS. This table does not change.

The datafill for AABS Enhanced Services Access for table TOPSPOS appears in the following table. Only the fields that apply directly to AABS Enhanced

AABS Enhanced Services Access (continued)

Services Access appear in the table. Refer to the *Data Schema* section of this manual for a description of the other fields.

Datafilling table TOPSPOS

Field	Subfield or refinement	Entry	Explanation and action
POSNO			Position number. A sample way to define the positions is as follows: • 400 - Toll and assist positions • 1500 - MDS automated pos (used for capture and delivery) • 1700 - MDS live attendant. For QMS, the team number and service profile are important.

Datafill example for table TOPSPOS

Sample datafill for table TOPSPOS appears in the following example.

[MAP example for table TOPSPOS

```
POSNO VCCKT      VCPDGRP CARDCODE DATAPATH
  POSAREA         SERVPROF
_____________________________________________________
400   TMS 1 2 5  NPDGP   DS1SIG   TMS  MP  ASCII  100  1
  OPR  4  QMSCAM   CORECAM   4
1500  TMS 1 2 5  NPDGP   DS1SIG   TMS  MP  ASCII  100  1
  OPR  10  QMSCAM  CORECAM  20
1700  TMS 1 2 5  NPDGP   DS1SIG   TMS  MP  ASCII  100  1
  OPR  10  QMSCAM  CORECAM  21
```

Datafilling table TQOPROF

Table TQOPROF specifies which TOPS QMS call selection and service profiles apply to an operator number.

The datafill for AABS Enhanced Services Access for table TQOPROF appears in the following table. Only the fields that apply directly to AABS Enhanced

Services Access appear in the table. Refer to the *Data Schema* section of this manual for a description of the other fields.

Datafilling TQOPROF

Field	Subfield or refinement	Entry	Explanation and action
			This table does not change.

Datafill example for table TQOPROF

Sample datafill for table TQOPROF appears in the following example.

MAP example for table TQOPROF

```
OPRNUM   DLFTTEAM   SVCPRNUM      SELAREA
_____________________________________________
  400        4          4         CALLQ 0
 1500       10         20         CALLQ 30
 1700       10         21         CALLQ 31
```

The team (field DLFTTEAM above) is entered also in tables TOPSPOS and TOPSDEV.

Datafilling table TQMSSERV

Table TQMSSERV names and describes QMS services. Every TOPS QMS call has one assigned service name entered in this table.

The datafill for AABS Enhanced Services Access for table TQMSSERV appears in the following table. Only the fields that apply directly to AABS Enhanced Services Access appear in the table. Refer to the *Data Schema* section of this manual for a description of the other fields.

Datafilling table TQMSSERV

Field	Subfield or refinement	Entry	Explanation and action
			This table does not changed.

Datafill example for table TQMSSERV

Sample datafill for table TQMSSERV appears in the following table.

AABS Enhanced Services Access (continued)

MAP example for table TQMSSERV

```
SERVNUM    QMSSERV      BASESERV IMPLCT4Q  SERVTYPE
_____________________________________________________________
   4          TA          TASERV  0_MINUS   BASE
  20    MDS_AUTO_SERV    TASERV  MDS_AUTO  CUSTOM 945 MDS N
  21    MDS_OPR_SERV     TASERV  MDS_OPR   CUSTOM 945 MDS N
```

Datafilling table TQSVPROF

Table TQSVPROF specifies service profiles by association of service names.

The datafill for AABS Enhanced Services Access for table TQSVPROF appears in the following table. Only the fields that apply directly to AABS Enhanced Services Access appear in the table. Refer to the *Data Schema* section of this manual for a description of the other fields.

Datafilling table TQSVPROF

Field	Subfield or refinement	Entry	Explanation and action
			This table does not change.
PROFNUM		0-254	The service profile number defined has references in tables TOPSPOS and TQOPROF.
SVCLIST		alphanumeric	The service names must be defined in table TQMSSERV.

Datafill example for table TQSVPROF

Sample datafill for table TQSVPROF appears in the following example.

MAP example for table TQSVPROF

```
PROFNUM          SVCLIST
_____________________________________
   4             TA $
  20             MDS_AUTO_SERV $
  21             MDS_OPR_SERV  TA $
```

The live MDS operator can serve as regular TA operators. This condition for PROFNUM = 21 appears in the preceding sample datafill.

Datafilling table QMSTOPS

Table QMSTOPS provides the first phase of call queue assignment for calls marked for QMS. Table QMSTOPS provides each call origination type a new call type for queue (CT4Q). The new call type is the first CT4Q value for each call.

The datafill for AABS Enhanced Services Access for table QMSTOPS appears in the following table. Only the fields that apply directly to AABS Enhanced Services Access appears in the following table. Refer to the *Data Schema* section of this manual for a description of the other fields.

Datafilling table QMSTOPS

Field	Subfield or refinement	Entry	Explanation and action
			This table does not change.

Datafill example for table QMSTOPS

Sample datafill for table QMSTOPS appears in the following example.

MAP example for table QMSTOPS

```
   CO            CT4Q
_____________________________
   UNSPEC        UNSPEC
   OH            0_MINUS
   OA            0_PLUS
   DD            1_PLUS
   CAMA          CAMA
   RCAMA         RCAMA
   DELAY         DELAY
```

Datafilling table CT4QNAMS

Table CT4QNAMS defines the operator display.

The datafill for AABS Enhanced Services Access for table CT4QNAMS appears in the following table. Only the fields that apply directly to AABS

AABS Enhanced Services Access (continued)

Enhanced Services Access appear in the table. Refer to the *Data Schema* section of this manual for a description of the other fields.

Datafilling table CT4QNAMS

Field	Subfield or refinement	Entry	Explanation and action
			This table does not change.

Datafill example for table CT4QNAMS

Sample datafill for table CT4QNAMS appears in the following example.

MAP example for table CT4QNAMS

```
CT4QNUM  CT4QNAME       NOAMA  CT4QDISP        AUTOORDB
_____________________________________________________
    0    UNSPEC           N      N               N
    1    0_MINUS          N      N               N
    2    0_PLUS           N      N               N
    3    0_PLUS_COIN      N      N               N
    4    0_PLUS_NONCOIN   N      N               N
    5    1_PLUS           N      N               N
    6    CAMA             N      N               N
    7    RCAMA            N      N               N
    8    DELAY            N      N               N
    9    MDS_AUTO         N      N               N
   10    MDS_OPR          N      Y MDSUNK        Y 10
   11    MDS_OPR_ENG      N      Y MDSENG        Y 10
   12    MDS_OPR_FRE      N      Y MDSFRE        Y 10
```

In the preceding datafill example, “MDSENG" appears to an MDS English operator.

Datafilling table CT4QCLAS

Table CT4QCLAS modifies the CT4Q according to the class of service. Segregation of different types of 0+ calls appears in the following datafill example. Table CT4QCLAS is not a required table and appears only to indicate how refinements that are not language can work.

The datafill for AABS Enhanced Services Access for table CT4QCLAS appears in the following table. Only the fields that apply directly to AABS

Enhanced Services Access appear in the table. Refer to the *Data Schema* section of this manual for a description of the other fields.

Datafilling table CT4QCLAS

Field	Subfield or refinement	Entry	Explanation and action
			This table does not change.

Datafill example for table CT4QCLAS

Sample datafill for table CT4QCLAS appears in the following example.

MAP example for table CT4QCLAS

```
OLDCT4Q          CLASCRIT         NEWCT4Q
_____________________________________________
0_PLUS           COIN             0_PLUS_COIN
0_PLUS           UNKNOWN_CLAS     0_PLUS_NONCOIN
0_PLUS           STATION          0_PLUS_NONCOIN
0_PLUS           HOTEL            0_PLUS_NONCOIN
0_PLUS           RESTRICTED       0_PLUS_NONCOIN
```

Datafilling table CT4QLANG

Table CT4QLANG uses language as a queue requirement. Language is not assigned until an operator or an automated service has the call. This table is only useful for these two types of calls. The operator marks the language of the call through keying actions. On recall, this language mark routes the call to the correct queue for recall. If the automated service marks the language, the language can be a criterion in this table and route to a correct operator when the initial position seizure occurs. Every CT4Q call type that can come from AABS, including through handoff, must be entered in this table.

The datafill for AABS Enhanced Services Access for table CT4QLANG appears in the following example. Only the fields that apply directly to AABS Enhanced Services Access appear in the table. Refer to the *Data Schema* section of this manual for a description of the other fields.

Datafilling table CT4QLANG

Field	Subfield or refinement	Entry	Explanation and action
			This table does not change.

AABS Enhanced Services Access (continued)

.Datafill example for table CT4QLANG

Sample datafill for table CT4QLANG appears in the following example.

MAP example for table CT4QLANG

```
OLDCT4Q          CLASCRIT        NEWCT4Q
_____________________________________________
UNSPEC           MDS             MDS_AUTO
UNSPEC           MEN             MDS_AUTO
UNSPEC           MFR             MDS_AUTO
UNSPEC           MOP             MDS_OPR
UNSPEC           MOE             MDS_OPR_ENG
UNSPEC           MOF             MDS_OPR_FRE
0_MINUS          MDS             MDS_AUTO
0_MINUS          MEN             MDS_AUTO
0_MINUS          MFR             MDS_AUTO
0_MINUS          MOP             MDS_OPR
0_MINUS          MOE             MDS_OPR_ENG
0_MINUS          MOF             MDS_OPR_FRE
0_PLUS_COIN      MDS             MDS_AUTO
0_PLUS_COIN      MEN             MDS_AUTO
0_PLUS_COIN      MFR             MDS_AUTO
0_PLUS_COIN      MOP             MDS_OPR
0_PLUS_COIN      MOE             MDS_OPR_ENG
0_PLUS_COIN      MOF             MDS_OPR_FRE
0_PLUS_NONCOIN   MDS             MDS_AUTO
0_PLUS_NONCOIN   MEN             MDS_AUTO
0_PLUS_NONCOIN   MFR             MDS_AUTO
0_PLUS_NONCOIN   MOP             MDS_OPR
0_PLUS_NONCOIN   MOE             MDS_OPR_ENG
0_PLUS_NONCOIN   MOF             MDS_OPR_FRE
1_PLUS           MDS             MDS_AUTO
1_PLUS           MEN             MDS_AUTO
1_PLUS           MFR             MDS_AUTO
1_PLUS           MOP             MDS_OPR
1_PLUS           MOE             MDS_OPR_ENG
1_PLUS           MOF             MDS_OPR_FRE
DELAY            MDS             MDS_AUTO
DELAY            MEN             MDS_AUTO
DELAY            MFR             MDS_AUTO
DELAY            MOP             MDS_OPR
DELAY            MOE             MDS_OPR_ENG
DELAY            MOF             MDS_OPR_FRE
MDS_OPR          MOP             MDS_OPR
MDS_OPR          MOE             MDS_OPR_ENG
MDS_OPR          MOF             MDS_OPR_FRE
```

Datafilling tables TQORDERA and TQORDERB

Tables TQORDERA and TQORDERB determine the order of CT4Q refinement.

The datafill for AABS Enhanced Services Access for tables TQORDERA and TQORDERB appears in the following table. Only the fields that apply directly to AABS Enhanced Services Access appear in the table. Refer to the *Data Schema* section of this manual for a description of the other fields.

Datafilling tables TQORDERA and TQORDERB

Field	Subfield or refinement	Entry	Explanation and action
			These tables are not changed.

Datafill example for tables TQORDERA and TQORDERB

Sample datafill for tables TQORDERA and TQORDERB appear in the following example.

MAP example for tables TQORDERA and TQORDERB

```
CT4QTABL      PREOPR    POSTAUTO     RECALL
_____________________________________________
CT4QCLAS         1          0           0
CT4QREST         0          0           0
CT4QPFXT         0          0           0
CT4QCLD          0          0           0
CT4QORIG         0          0           0
CT4QTIME         0          0           0
CT4QCAR          0          0           0
CT4QAUTO         0          0           0
CT4QLANG         0          1           1
```

Datafilling table TQMSFCQA

Table TQMSFCQA assigns the final call queue.

The datafill for AABS Enhanced Services Access for table TQMSFCQA appears in the following table. Only the fields that apply directly to AABS

AABS Enhanced Services Access (continued)

Enhanced Services Access appear in the table. Refer to the *Data Schema* section of this manual for a description of the other fields.

Datafilling table TQMSFCQA

Field	Subfield or refinement	Entry	Explanation and action
			This table does not change.

Datafill example for table TQMSFCQA

Sample datafill for table TQMSFCQA appears in the following example.

MAP example for table TQMSFCQA

```
CT4Q                CALLQ               RECALLQ
____________________________________________________
UNSPEC              CQ2                 CQ6
0_MINUS             CQ2                 CQ6
0_PLUS              CQ2                 CQ6
0_PLUS_COIN         CQ2                 CQ6
0_PLUS_NONCOIN      CQ2                 CQ6
1_PLUS              CQ2                 CQ6
CAMA                CQ0                 CQ0
RCAMA               CQ0                 CQ0
DELAY               CQ2                 CQ6
MDS_AUTO            CQ10                CQ14
MDS_OPR             CQ11                CQ15
MDS_OPR_ENG         CQ12                CQ16
MDS_OPR_FRE         CQ13                CQ17
```

Datafilling table TQCQINFO

Table TQCQINFO assigns the service of initial call arrivals. The CALLQ assigned in table TQMSFCQA determines the services.

The datafill for AABS Enhanced Services Access for table TQCQINFO appears in the following table. Only the fields that apply directly to AABS Enhanced Services Access appear in the table. Refer to the *Data Schema* section of this manual for a description of the other fields.

Datafilling table TQCQINFO

Field	Subfield or refinement	Entry	Explanation and action
			This table does not change.

Datafill example for table TQCQINFO

Sample datafill for table TQCQINFO appears in the following example.

MAP example for table TQCQINFO

```
CALLQ    QMSSERV          CWOFF      CWON       TREAT
_____________________________________________________
CQ0      TA               10         25         EMR3
CQ2      TA               10         25         EMR3
CQ6      TA               10         25         EMR3
CQ10     MDS_AUTO_SERV    32766      32767      EMR4
CQ11     MDS_OPR_SERV     10         25         EMR4
CQ12     MDS_OPR_SERV     10         25         EMR4
CQ13     MDS_OPR_SERV     10         25         EMR4
CQ14     MDS_AUTO_SERV    32766      32767      EMR4
CQ15     MDS_OPR_SERV     10         25         EMR4
CQ16     MDS_OPR_SERV     10         25         EMR4
CQ17     MDS_OPR_SERV     10         25         EMR4
```

Datafilling table TQCQPROF

Table TQCQPROF defines QMS call queue profiles. Table TQCQPROF defines which call queues an agent serves. Table TQCQPROF also defines in which agent queue an agent waits in while the agent is idle. This table relates the agent queue to the call queue.

The datafill for AABS Enhanced Services Access for table TQCQPROF appears in the following table. Only the fields that apply directly to AABS Enhanced Services Access appear in the table. Refer to the *Data Schema* section of this manual for a description of the other fields.

Datafilling table TQCQPROF

Field	Subfield or refinement	Entry	Explanation and action
			This table does not change.

Datafill example for table TQCQPROF

Sample datafill for table TQCQPROF appears in the following table.

AABS Enhanced Services Access (continued)

MAP example for table TQCQPROF

```
CQPROFNM     DLAYCT4Q     AGENTQ          PRIOAREA
_____________________________________________________
2            0_MINUS      AQ0     OFC     CQ2  CQ6$
30           MDS_AUTO     AQ1     OFC     CQ10 CQ14$
32           MDS_OPR      AQ3     PROF    CQ15 10  CQ16 10
                                          CQ17 10$
                                          CQ11 10  CQ12 10
                                          CQ13 10$
                                          CQ6 10$  CQ12 10$
```

In the preceding example, the live MDS operator (profile #32) serves calls according to the following priorities:

- MDS recalls (transfers)
- MDS non-recalls
- Toll and Assist recalls
- Toll and Assist non-recalls

Datafilling table TQOGTKEY

The following are the two types of transfers:

- Automated to live

  The automated system must change the language with an OGT key for language selection. This change routes to the correct operator and displays the correct language to the operator. The language determines the correct operator

- Live to automated

  The live operator does not change the language when the operator transfers to the automated system.

There must be an OGT key for each of the two transfers.

Table TQOGTKEY contains OGT values for any TOPS-MP, TOPS-SP, or TOPS-BP position entered in table TOPSPOS. The values use the QMS CAM. The OGT keys for MDS include three language keys and three CT4Q keys for transfers. The new language keys are for the automated operators to change the language before transfer. The CT4Q keys are for the transfer.

The datafill for AABS Enhanced Services Access for table TQOGTKEY appears in the following table. Only the fields that apply directly to AABS

Enhanced Services Access appear in the table. Refer to the *Data Schema* section of this manual for a description of the other fields.

Datafilling table TQOGTKEY

Field	Subfield or refinement	Entry	Explanation and action
			This table does not change.

Datafill example for table TQOGTKEY

Sample datafill for table TQOGTKEY appears in the following table.

MAP example for table TQOGTKEY

```
KEYNUM      LABEL       KEYINFO
_____________________________________________
0           ASST        ASST
17          ENGLISH     LANG        ENG
19          FRENCH      LANG        FRE
20          MDSUNK      LANG        MOP
21          MDSENG      LANG        MOE
22          MDSFRE      LANG        MOF
26          AUTOMDS     CT4Q        MDS_AUTO
36          LIVEMDS     CT4Q        MDS_OPR
```

Datafilling table TQFMNAMS

Table TQFMNAMS assigns symbolic names for FMCT assignment processing.

The datafill for AABS Enhanced Services Access for table TQFMNAMS appears in the following table. Only the fields that apply directly to AABS Enhanced Services Access appear in the table. Refer to the *Data Schema* section of this manual for a description of the other fields.

Datafilling table TQFMNAMS

Field	Subfield or refinement	Entry	Explanation and action
			This table does not change.

Datafill example for table TQFMNAMS

Sample datafill for table TQFMNAMS appears in the following example.

AABS Enhanced Services Access (continued)

MAP example for table TQFMNAMS

```
FMCTNUM          FMCTNAME
_____________________________
1                0_MINUS
9                MDS_AUTO
10               MDS_OPR
```

Datafilling table TQFMCT4Q

Table TQFMCT4Q assigns a base FM call type.

The datafill for AABS Enhanced Services Access for table TQFMCT4Q appears in the following table. Only the fields that apply directly to AABS Enhanced Services Access appear in the table. Refer to the *Data Schema* section of this manual for a description of the other fields.

Datafilling table TQFMCT4Q

Field	Subfield or refinement	Entry	Explanation and action
			This table does not change.

Datafill example for table TQFMCT4Q

Sample datafill for table TQFMCT4Q appears in the following example.

MAP example for table TQFMCT4Q

```
CT4Q             FMCT
_____________________________
0_MINUS          0_MINUS
MDS_AUTO         MDS_AUTO
MDS_OPR          MDS_OPR
```

Datafilling table TOPSTOPT

The datafill for AABS Enhanced Services Access for table TOPSTOPT appears in the following table. Only the fields that apply directly to AABS

AABS Enhanced Services Access (end)

Enhanced Services Access appear in the table. Refer to the *Data Schema* section of this manual for a description of the other fields.

Datafilling table TOPSTOPT

Field	Subfield or refinement	Entry	Explanation and action
ACD		QMSCAM	Only calls that arrive on trunks designated QMSCAM are eligible for MDS handling.

Datafill example for table TOPSTOPT

Sample datafill for table TOPSTOPT appears in the following example.

MAP example for table TOPSTOPT

```
CLLI      ACDDATA                DISPCLG   ADASERV
_____________________________________________________
ITRAFDD1  QMSCAM  CORECAM N        Y         N
```

Tools for verifying translations

The AABS Enhanced Services Access does not use translation verification tools.

SERVORD

The AABS Enhanced Services Access does not use SERVORD.

Account Code Billing

Ordering codes

Functional group ordering code: ABS00101.

Functionality ordering code: not applicable

Release applicability

BCS33 and later versions

Requirements

To operate, Account Code Billing (ACB) has the following requirements:

- BAS Generic, BAS00003
- Operator Services Basic, OSB00101, and table TOPSFTR parameter TOPS_ON_OFF_SWITCH = Y

Description

The following features provide the functionality of ACB:

Feature number	Feature name
NC0035	Account Code Billing

Account Code Billing (ACB) allows a subscriber to dial 0+ calls and enter 15 when Automated Alternate Billing Service (AABS), or Mechanized Calling Card Service (MCCS) prompts the subscriber. The ACB allows this functionality when a subscriber uses Automatic Calling Card Service (ACCS) for a calling card number followed by a two to four dual-tone multifrequency (DTMF) digit account code the subscriber specifies. This account code passes to the billing processor. The operating company can use the billing processor to group calls that use the same account code. The operating company displays the grouped calls in the telephone bill of the subscriber.

The ACB displays calls charged to different persons on one account in one subscriber telephone bill.

For example, an attorney can want to charge telephone calls that relate to a case/client to that case/client. To use ACB, the attorney assigns a two to four digit code to each case/client and enters the code. Refer to the previous description. The operating company can help the attorney identify the amount to charge each case/client for telephone calls. The operating company displays the calls that a subscriber makes with the same account code separately on the telephone bill. The operating company provides total charge for each account code on the telephone bill.

Account Code Billing (continued)

Roommates that share the same telephone number can have the calls appear separately in the telephone bill. Roommates can have the calls totaled for each person in the telephone bill.

The AABS, MCCS and ACCS calls can provide. One of these three features can provide ACB. The selection as to which one of MCCS, ACCS and AABS provides ACB depends on what is available in the office. The ACB allows the subscriber to enter an account code with the called number. The Automatic Message Accounting (AMA) billing record includes the account code. The AMA allows the Operating Company to group calls, that use the same account code, in the telephone bill. The ACB calls record as station-paid calls. The DTMF telephones allow ACB.

Operation

Background

The Operator Services System (OSS) environment uses AABS, MCCS and ACCS. The OSS uses these three features to eliminate operator involvement in calling card calls and to collect calls (AABS). The OSS uses the three features in the same type of third number billed calls (AABS).

The MCCS and ACCS share the same type of abilities. The MCCS and ACCS automate the collection of the calling card number in a calling card call that eliminates operator interruption. The MCCS uses the database Billing Validation Center (BVC) to perform calling card verification. The ACCS uses a Line Information Data Base (LIDB) to perform calling card verification.

The AABS includes the functionality of MCCS. The AABS uses speech recognition technology to automate collect calls and third party billed calls. The AABS off-loads some of the call processing functions from the CM to the VSN Processor.

The ACB collects the account codes. The ACB enhances the capabilities of AABS, MCCS and ACCS.

The ACB also affects the Automatic Message Accounting (AMA) billing records that now require a new module code to store the account code. The AABS protocol used to communicate between the Compute Module (CM) and the Voice Service Node (VSN) also changes for this feature.

Account Code Billing (continued)

Capabilities

The abilities that ACB provides appear in the following list:

- Ability to enter 15 to select ACB service. Ability to enter a two to four digit account code.
- Ability to append the account code to the AMA billing record.
- Ability to use account codes the subscriber defines. For example, an attorney that uses this feature can assign one account code to each client. As the attorney acquires new clients, the attorney can assign and use new account codes.
- Ability to make sequence calls after the entry of an account code for the first call. Calls that follow require the same account code.

  Note: The system hands over ACB sequence calls to MCCS so that the MCCS can handle the calls. The MCCS handles the calls the AABS provides ACB. This procedure is not new. The MCCS also handles alternate billed AABS sequence calls.

- Ability to use ACB for international calls if the same office provides the operator service for the chosen interexchange carrier of the subscriber.
- Ability to play reprompt announcements when an error occurs in the entry of the account code. The system uses current calling card reprompt announcements. This feature does not provide new announcements.

  An account code is not correct if it satisfies one of the following conditions:

  After the entry of 15, the following values are entered:

  — nothing

  — only one digit

  — more than four digits

  — the account code contains the non-numeric character (*)

  The octothorpe (#) indicates the termination of the account code entry. The system ignores entries after the octothorpe. The previous tests determine if an account code entered before the octothorpe is valid or invalid. The use of the octothorpe to terminate the account code reduces the subscriber hold time (SHT).
- Ability to record ACB calls as station-paid calls for billing purposes.

Account Code Billing (continued)

Call flow

Descriptions of the subscriber-switch interaction for three important ACB call scenario appear in the following list:

- Successful ACB call scenario. The user correctly enters the account code.
- Reprompt ACB call scenario. The user does not enter the account code correctly. The user correctly enters the account code after reprompt. As a result, the user completes the call.
- Invalid account code scenario. The user does not enter the account code correctly. The user does not enter the account code correctly after reprompt. The switch discards the call.

Successful ACB call scenario

- Initiate call

  The subscriber dials 0. The subscriber dials one of seven digits, ten digits, 411 or international telephone number from a DTMF telephone.

- Enter account code

  The subscriber hears a bong tone and/or an announcement in an AABS call. The subscriber hears a bong tone or an announcement if the call is an MCCS or an ACCS call. The MCCS/ACCS announcement prompts for a calling card number. The subscriber enters 15 and a valid account code in an MCCS/ACCS call. In an AABS call, the announcement can prompt the subscriber to select the type of billing. To select the type of billing, the subscriber enters one code from a list of two digit codes. The subscriber enters 15 followed by a valid account code. The announcement does not include account code billing. The system accepts account code billing. An # terminates the account code entry for a quicker call completion.

- Call completed

  The subscriber hears a Thank you message that you can brand. The call ends. Refer to Directory Assistance/Toll Branding, OSB00101, for branding.

- Prepare telephone bill with account codes

  The system records the call as a station-paid call. The AMA billing record also records the account code. This functionality allows the operating company to instruct the billing Processor to group calls that use the same account code. The billing Processor displays separate totals on the telephone bill of the subscriber.

Reprompt ACB call scenario

- Initiate call

  The subscriber dials 0. The subscriber dials one of seven digits, ten digits, 411 or an international telephone number from a DTMF telephone.

- Enter incorrect account code

  After the subscriber hears a bong tone and/or an announcement, the subscriber enters 15 and an incorrect account code. An example of an incorrect account code is a five digit number.

- Enter correct account code again

  The application plays a message that prompts the subscriber to enter the number again. The message can be Your card number is incorrect, please enter the card number again. The system does not consider the introduction of a new message for account codes. A new message is difficult and has time limits. The subscriber enters 15 again. The subscriber enters a correct account code.

- Call completed

  The subscriber hears a Thank you message that you can brand. The call ends. Refer to Directory Assistance /Toll Branding, OSB00101, for branding.

- Prepare telephone bill with account codes

  The system records the call as a station-paid call. The AMA billing record also records the account code. This functionality allows the operating company to instruct the billing Processor to group calls that use the same account code. The billing Processor displays separate totals on the telephone bill of the subscriber.

Invalid account code scenario

- Initiate call

  The subscriber dials 0. The subscriber dials one of seven digits, ten digits, 411, or international telephone number from a DTMF telephone.

- Enter incorrect account code

Account Code Billing (continued)

After the subscriber hears a bong tone and/or an announcement, the subscriber enters 15 and an incorrect account code. An example of an incorrect account code is a five digit number.

- Enter incorrect account code again

  If the subscriber enters an incorrect account code after three reprompts, the switch plays a message. The message instructs the subscriber to hang up. The switch instructs the subscriber to check the number and try again. The switch discards the call if the subscriber does not hang up.

Error handling

This section covers the error handling procedures used in calls after the subscriber enters 15 to select ACB. Error handling does not change the error handling procedures for other call scenarios. This section does not include these error handling procedures.

Reprompt ACB call scenario and Invalid account code scenario describe the error handling procedure for incorrect account code.

The switch plays a reprompt announcement to the subscriber to enter the calling card number again. The subscriber must enter the service code and a correct account code again. The switch plays the signoff message if the subscriber does not enter a correct account code after three reprompt announcements. The signoff message informs the subscriber to hang up and try again.

The switch plays a signoff message immediately if the system denies ACB service because of reasons other than an invalid account code.

The system does not route ACB calls that are not successful to the operator. The system routes successful Directory Assistance (DA) calls that use ACB to the operator for DA service. The account code the subscriber selects does not appear to the operator. The operator cannot provide information about the account code. The operating company must train operators for this condition.

If the subscriber flashes hooks or dials 0 after the selection of ACB, the system does not route the call to an operator. The switch plays a signoff message plays and terminates the call.

Translations table flow

A translations table flow is not available for ACB.

Account Code Billing (continued)

Limits

The limits that apply to ACB appear in the following list:

- The user cannot use ACB from hotel, public (includes coin) and restricted (for example, prison) telephones.
- The user cannot make ACB calls from dial-pulse telephones. The call must originate from a DTMF telephone.
- The operator can not enter or retrieve the account code if an ACB call arrives at the operator. In most events, the system does not route an ACB call to the operator. The subscriber must try the call again if a problem occurs in an ACB call. The system plays a message to instruct the subscriber to try again. In a 0+ DA call that uses ACB, the system routes the call to the operator for DA service. This functionality occurs even though the operator cannot access or enter the account code.
- The user cannot use alternate billing (Third party, calling card) with ACB. A subscriber that dials a 0+ DA call with ACB can request the operator for alternate billing for the DA call. The switch allows the operator to change the billing type of the call. The switch accepts the billing type change.
- When the subscriber enters 15 to select ACB, the subscriber cannot enter a calling card number. The subscriber cannot select any other type of billing when reprompted if the subscriber entered an incorrect account code. The subscriber must enter 15 again and enter a correct account code. The subscriber can hang up and try again to select other types of billing.
- The operator does not validate account codes. The subscriber selects account codes. The account codes must be two to four digit numbers. Validation causes additional delay in the completion of the call.
- New announcements are not created for this feature. The system uses current announcements in AABS, MCCS, and ACCS.

Current restrictions hold for AABS, MCCS and ACCS. In ABC calls, the restrictions supercede the current restrictions.

Interactions

Descriptions of the actions between ACB and other functionalities appear in the following paragraphs.

The ACB enhances the features AABS, MCCS and ACCS. The ACB does not affect the current abilities of AABS, MCCS or ACCS. The ACB affects the causes described in this section.

This feature shares the data and CPU resources of AABS, MCCS, and ACCS with other types of AABS, MCCS, and ACCS calls. The AABS, MCCS, and

Account Code Billing (continued)

ACCS calls are alternate billed calls. The number of alternate billed calls the switch can handle at the same time decreases when ACB calls are in progress.

The Revenue Accounting Office (RAO) format calling card can start with 15. This format can cause the switch to interpret the number incorrectly as an ACB call. This condition is not a problem because all the RAO cards in use start with the digit 6 or greater.

The AMA billing record changes do not affect the current AABS, MCCS and ACCS call types. The AMA billing record changes do not affect these call types. The new module is for ACB calls. The modules codes 52 and 61 are not included for ACB calls.

The ACB does not affect the interworking of AABS, MCCS or ACCS with TOPS InterLATA Carrier Service (TICS). If TICS is in the office, interLATA calls and overseas calls can use ACB. This functionality occurs if the office provides operator service for the chosen interexchange carrier of the subscriber.

Activation/deactivation by the end user

The ACB does not require activation or deactivation by the end user.

Billing

The ACB creates a new module (Module code 301). The module appends to the AMA billing record in the Bellcore AMA Format (BAF) to store the account code. The new module code is implemented in the new Call Recording System (CRS) platform introduced in BCS32. This feature requires the extended Bellcore AMA format (EBAF) phase 2 implementation. Entry of parameter EBAF_PHASE with the value PHASE2 selects phase 2 in Table TOPSAMAOP.

Station Message Detail Recording

The ACB does not affect Station Message Detail Recording.

Datafilling office parameters

The ACB does not affect office parameters.

Datafill sequence

The tables that require datafill to implement ACB appear in the following table. The tables appear in the correct entry order.

Datafill requirements for ACB

Table	Purpose of table
TOPSPARM	The TOPS office parameter.
TOPAMAOP	The TOPS AMA options.

Datafilling table TOPSPARM

Datafill for ACB for table TOPSPARM appears in the following table. The fields that apply directly to ACB appear in this table. Refer to the data schema section of this document for a description of the other fields.

Datafilling table TOPSPARM

Parameter	Explanation and action
ACCOUNT_CODE_BILLING_ENABLE	Enter Y to enable this feature.

Datafill example for table TOPSPARM

Sample datafill for table TOPSPARM appears in the following example.

MAP example for table TOPSPARM

```
PARMNAME                          PARMVAL
_____________________________________________
POSITION_SANITY_TIMER             N
ACCOUNT_CODE_BILLING_ENABLE       Y
LANG_ERROR_SCREEN_DISPLAY         LANG
```

Datafilling table TOPAMAOP

Datafill for ACB for table TOPSAMAOP appears in the following table. The fields that apply directly to ACB appear in this table. Refer to the data schema section of this document for a description of the other fields.

Datafilling table TOPAMAOP

Parameter	Explanation and action
EBAF_PHASE	Enter PHASE2 to enable the TOPS Account Code Billing package.

Account Code Billing (end)

Datafill example for table TOPAMAOP

Sample datafill for table TOPAMAOP appears in the following example.

MAP example for table TOPAMAOP

```
AMAOPT        OPTINFO
_____________________________________________________________
EBAF_PHASE    PHASE2
```

Tools for verifying translations

The ACB does not use tools for verifying translations.

SERVORD

The ACB does not use SERVORD.

Automated Alternate Billing Service

Ordering codes

Functional group ordering code: ABS00101

Functionality ordering code: not applicable

Release applicability

TOPS08 and later versions

Requirements

The Automated Alternate Billing Service has the following requirements:

- the BAS Generic, BAS00001
- the Operator Services Basic, OSB00101, and table TOPSFTR parameter TOPS_ON_OFF_SWITCH = Y

Description

The following features provide this functionality:

Feature number	Feature name
the AF1527	TOPS Data and Voice Link Utilities
the AF1528	BIlling Method Collection
the AF1529	Billing Verification
the AF1530	AABS Protocol Installation and VSN Software Alarms
the UL000276	TOPS MP, AABS: Wrong Displays at Terminal
the UX000339	AABS: MPC Voice Link does not TRS (VSN)
the AF3011	AABS VSN Crossprocessor Restructure
the BK14103	RAP: CMCALLP SWERRS when AABS tuple deleted from TOPSVNIN
the UT307750	TOPS04 limit for TOPS_PO_PB_CHARS
the BY71965	Add SPID/NBEC to AABS (TOPS08)

In the Operator Services System (OSS) environment, reduce operator work time when possible. This action decreases operating costs for the operators of that segment of the operating company. Features that provide operator support without the use of a live operator are good for the operating company. One

Automated Alternate Billing Service (continued)

example of mechanized support is Mechanized Calling Card Service (MCCS). MCCS automates completion of 0+ calls billed to a Calling Card. Another example of mechanized support is Automatic Coin Toll Service (ACTS). ACTS automates collection of coins on 1+ calls from coin phones. With these two services, operating companies can reduce the number of calls that operators handle. This action reduces the operator work force.

The AABS continues the trend to automate operator assistance calls. Like MCCS, AABS provides automated completion of Calling Card calls. With AABS, most of the overhead of subscriber interaction is off-loaded from the Digital Multiplex System (DMS) to the voice service node (VSN). An example of this overhead is the collection of digits. The AABS adds the new capability to automate station collect and third number billing calls. This new capability occurs through the use of voice recognition technology and prompt generation to communicate with the billed party. The AABS is an optional package for a DMS-200 TOPS office. With AABS, the DMS communicates with the VSN to automate the following.

- handling of 0+ dialed Station Collect
- Third number billed
- Calling Card calls

Zero plus calls, eligible for fully automated handling, are routed to a VSN. Zero minus calls and 0+ calls that cannot be automated route to an operator for handling. Transfer these calls to a VSN to obtain billing acceptance from the billed party. Obtain acceptance after the operator enters all the information necessary to complete the call. Calls can require operator handling before the calls are handed off to a VSN. These calls are known as AABS Handoff calls. These calls are handed off to a VSN for third or station collect billing acceptance.

The AABS can route calls at the VSN to an operator for call completion handling when necessary. This required routing occurs when the VSN cannot obtain billing information from the calling party. This required routing occurs when the VSN is not able to obtain billing acceptance from the billed party.

In BCS32 the Talking Alternate Billing Services (TABS) of Northern Telecom introduces bilingualism to AABS. Bilingualism allows the VSN to prompt the subscriber for language selections. A language selection allows the VSN to use the subscriber selected languages for additional prompts. A language

selection allows the VSN to obtain billing acceptance. Refer to the following manual for more information:

- Feature AF2801 MMI Enhancements for Bilingual AABS (BCS33: NTG232AA - French-English Bilingual AABS) in the *TOPS VSN ABBS-Features Description Manual,* 450-1301-101.

Typical AABS call scenario

The following is a standard AABS call plan:

1. The calling party dials 0+NPA-NXX-XXXX.
2. The TOPS switch relays the call to the VSN. An announcement greets the calling party and states the following options. The calling party can enter 11 for a collect call, 12 for a third number billed call or calling card number. Enter third number billing here.
3. The calling party enters 11 from a touch tone phone to select a collect call.
4. The AABS prompts the caller for their name.
5. The caller announces the name of the caller.
6. The AABS records the name. The AABS calls the called number.
7. When the called party answers, the called party hears an announcement. This announcement asks if the called party accepts the collect call charges from Caller name played back. The announcement asks the called party to reply with YES or NO.
8. The called party replies with YES.
9. The system connects the calling and called parties. The AABS and the VSN do not interact any longer with the call.

Typical AABS handoff call scenario

The following is a standard AABS handoff call plan:

1. The calling party dials 0.
2. The system routes the call to an operator.
3. The operator asks the calling party what type of call the calling party requires.
4. To respond, the calling party requests a collect call to NPA-NXX-XXXX.
5. The operator enters the called number and the method of billing. The operator hands off the call to AABS.
6. The AABS prompts the calling party for the name of the calling party.
7. The caller announces the name of the caller.

Automated Alternate Billing Service (continued)

8. The AABS records the name of the caller. The AABS calls the called number.
9. When the called part answers, the called party hears an announcement. This announcement asks if the called party accepts the collect call charges from Caller name played back. The announcement asks the called party to reply with YES or NO.
10. The called party replies with YES.
11. The system connects calling and called parties. The AABS and the VSN do not interact any longer with the call.

The Automated Alternate Billing Service (AABS) allows the Operating Company to automate the handling of the following 0+ calls:

- Collect
- Third Number
- Calling Card.

Before AABS, collect and third number calls required operator support to complete. Operator involvement is not required with AABS. The AABS is part of the Traffic Operator Position System (TOPS) package. This condition allows the subscriber to access an operator at specified stages of AABS handling. Calls like 0+ person-to-person require operator assistance.

The complete AABS offer involves two key parts: the DMS and the Voice Service Node (VSN). Different vendors supply the VSN. This document describes the VSN in general terms.

The following is an example call plan that uses AABS. A subscriber dials 0+ 7 or 10 digits. The DMS screens the call to determine if the call meets all requirements for AABS handling. If the call meets all requirements, the DMS selects a data link and a voice link to the VSN. The DMS sends a message to the VSN. The VSN plays a service selection announcement to the subscriber.

The subscriber responds as required. The VSN performs one of the following actions based on the response of the subscriber:

- Requests additional information from the subscriber to complete the call.
- Passes the billing information collected to the DMS for verification. If the billing data is correct, the VSN requests the DMS to connect the called party.
- Hands the call over to an operator because of a number of possible conditions. The subscriber dials zero for an operator, makes a selection that the VSN did not recognize, or times out. To time out indicates that the

subscriber does not make a selection in the specified time. Additional details appear later in the document.

This document focuses on the specified functions the DMS performs. These functions include the following:

- enters the data and voice links that connect the DMS to the VSN
- determines if the DMS can route a call to a VSN, or if the call is qualified for AABS handling
- selects a data link and a voice link over which to send a call to the VSN
- verifies billing for AABS calls
- sets up network connections according to VSN requests
- terminates communications with the VSN
- presents calls to an operator a VSN requests
- generates logs reports and activate or deactivate alarms. This log reports and alarms notify the operating company personnel of conditions that occur at the VSN.

The system provides the above functionality in four specified features:

- the AF1527 - TOPS Data and Voice Link Utilities
- the AF1528 - Billing Method Collection
- the AF1529 - Billing Verification
- the AF1530 - AABS Protocol Installation and VSN Software Alarms

This document does not described individual features. This document describes features together to complete AABS functionality from the DMS side.

This summary contains the feature package contents, feature package conditions, and a short summary of the features in this feature package.

AF1527 - TOPS Data and Voice Link Utilities

This feature provides the software that allows the DMS to select voice and data link connections. These connections link the DMS with a Voice Service Node (VSN). This feature provides the high-level routines for the Multiprotocol Controller (MPC). The MPC is the interface between the DMS and the VSN.

Automated Alternate Billing Service (continued)

For the data links, this feature provides the following:

- TOPS Virtual Node Inventory (TOPSVNIN) table to define the protocol and data link details for the AABS application
- ability to send VSN messages across the MPC data links
- ability to receive and direct incoming messages to the correct call process
- ability to produce audits that test the sanity of the data links
- ability to switch from one data link to another in a linkset

For the voice links, this feature provides the following:

- the trunk group type TOPSVL to define the voice links to the AABS application
- the VSN Member (VSNMEMBR) table that maps voice links to VSNs

AF1528 - Billing Method Collection

This feature provides the software that performs the following:

- screens for possible AABS handling of a call
- the selection of a data and a voice link to the VSN if a call qualifies for AABS handling
- the billing verification checks for AABS-handled calls

AF1529 - Billing Verification

This feature provides the software to set up or take down network connections according to requests from the VSN. This feature routes first AABS-handled calls to an operator. The VSN refers AABS-handled calls to the operator. The calls that route to an operator involve operator screen displays to handle calls that AAB first handles.

AF1530 - AABS Protocol Implementation and VSN Software Alarms

This feature provides the software to implement the protocol between the DMS and the VSN. The protocol is transparent to the user. This feature provides a series of logs the system generates when the DMS detects an error in the protocol. This feature contains a set of alarms. These alarms activate or deactivate according to not normal conditions that occur or clear at the VSN. The VSN notifies the DMS of the conditions that are not normal through maintenance messages. The VSN sends the maintenance messages over the data links.

UL000276 - TOPS MP, AABS: Incorrect Displays at Terminal

On a 0+ AABS collect call, the COL message does not appear on the operator screen. The called number can be a coin, denied or busy. When one of the

conditions occurs on 3rd number billing call denied or busy, the 3RD message does not appear on the operator screen.

UX000339 - AABS: MPC Voice Link won't RTS (VSN)

The MPC voice link does not RTS for an operating company. The VSN is not from Northern Telecom. Datafill for table TRKSGRP is from this package document. Change table TRKSGRP, and field TRKGRDTM, from 10 to 70 to correct the problem.

AF3011 - AABS VSN Crossprocessor Restructure

The AABS crossprocessor restructure allows the addition of Automated Directory Assistance Service (ADAS). ADAS and other future Enhanced Services allow additional types of voice and data links than the AABS.

BK14103 - RAP: CMCALLP SWERRS when AABS tuple is deleted from TOPSVNIN (BCS36)

Deletion is not allowed of a AABS or ADAS application tuple from table TOPSVNIN. The system gives one of the following error messages when a deletion attempt occurs:

```
DELETE operation is not allowed for the AABS application.
DELETE operation is not allowed for the ADAS application.
```

UT307750 - TOPS04 limitation for TOPS_PO_PB_CHARS

The PRS limit relates to PO/PB characters and table TOPSDISP.

When this condition occurs, the system sends the PO/PB characters (Position Occupied / Position Busy) to Single Purpose (TOPS-IV) and Basic Purpose TOPS positions. You can set office parameter TOPS_PO_PB_CHARS in table OFCOPT to Y. These characters allow login, logout, call arrival, and call end information. This information is in addition to like information already in the ASCII or AOSS protocol.

Table TRKGRP indexes table TOPSDISP for incoming calls. Table TOPSDISP allows character strings of a maximum of six characters in length to send to non-OPP TOPS positions.

The following call plan is not supported when PO/PB characters activate in the office. A call arrives on a TOPS trunk with an index in TOPSDISP. This index maps to a six character string display. The system hands the call off to AABS (Automated Alternate Billing Service). The call returns to a TOPS-IV position from AABS. An example of a TOPS-IV position from AABS is a subscriber hook flash.

Automated Alternate Billing Service (continued)

If the correct string in TOPSDISP is five characters or less, the system supports the call plan and all other call plans.

BY71965 - Add SPID/NBEC to AABS

This feature allows the Automated Alternate Billing Service (AABS) protocol to send DMS switch provisioned Service Provider Identifiers (SPIDs)[1] and Non-Bell Exchange Carrier (NBEC)[2] codes. The AABS sends these codes to the TOPS Voice Services Node (VSN). The VSN requires this information to facilitate branding for AABS calls.

Background

Feature AF2019 in functionality Directory Assistance/Toll Branding (OSB00001), allows operating companies to provide front end branding for calls. Feature AF2019 allows operating companies to provide calls for contract customers like InterLATA Carriers (ICs) and Non-Bell Exchange Companies (NBECs). Provide the branding announcement to the subscriber with switch based DRAMs. Refer to this functionality for additional background information.

Feature AF6711 in functionality Branding through SPID (ENSV0017) allows operating companies to provision and process SPIDs according to the originating party. Feature AF6711 allows operating companies to process Service Provider Identifiers according to the originating party. This feature starts front end branding according to the SPID of the originating party. Refer to this functionality for additional background information.

New capabilty

This feature allows a Non-Bell Exchange Carrier (NBEC) code and the SPID code of the original party to occur in the Call Definition DID of the AABS protocol. This specification makes branding of AABS calls easier. The feature sends this information to the Voice Services Node (VSN) at Call Begin. The VSN recognizes these codes to provide AABS branding to the ABBS customers. Details of the AABS Protocol are proprietary.

Datafill is not required.

Operation

The hardware for the DMS section of AABS is standard DMS hardware. Refer to vendor documentation for hardware requirements for the VSN.

---

[1] A Service Provider ID (SPID) is a code that identifies a telecommunications or related service provider.

[2] A Non-Bell Exchange Carrier (NBEC) code identifies the company ID for non-carrier handled calls.

Automated Alternate Billing Service (continued)

The DMS and the VSN connect through data and voice links. On the DMS side, the data links connect to a Multiprotocol Controller (MPC) card. The MPC card is on an Input/Output Controller (IOC) shelf. The voice trunks are DS1 links on a Digital Trunk Controller (DTC) or on a Trunk Module (TM).

The data links exchange signaling and status information on a call. Two data links to a VSN are supported. Each link is on a separate MPC. For reliability, each MPC is on a different IOC shelf. The DMS can interface a maximum of 16 data links. The DMS can interface a maximum of eight VSNs when two data links for each VSN are in use. The data links support X.25 protocol.

The voice links allow the DMS to monitor tones and voice from the calling and called parties. The VSN uses the voice links to send announcements to the calling and called parties. Four DS1 links to the VSN are supported. Each DS1 links provides 24 voice channels. Each call that the AABS handles is associated with one voice channel. Four DS1 links can handle a total of 96 simultaneous calls.

A diagram of the DMS and VSN connection appears in the following figure. Each remote switch must connect to a VSN to provide AABS handling in an Operator Centralization (OC) environment.

Automated Alternate Billing Service (continued)

Possible DMS/VSN Configuration

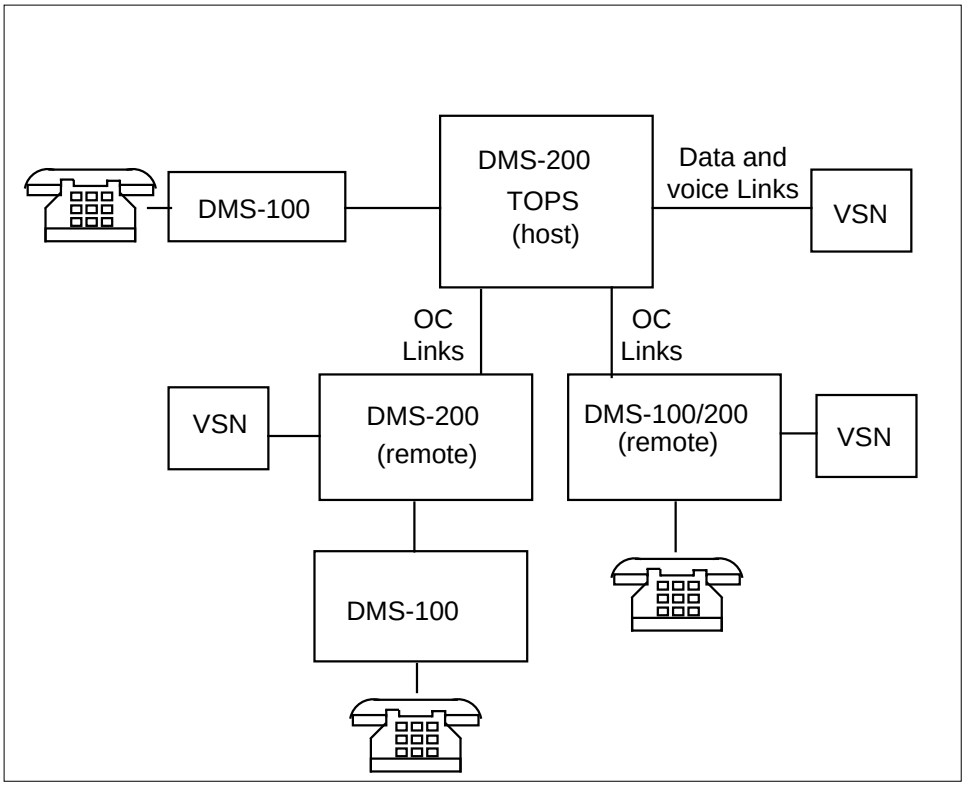

AF1527-AF1529 Datafilling the data and voice links

Enter the following 11 tables for the data and voice links between the DMS and the VSN.

- TOPSVNIN
- MPC
- X25LINK
- MPCFASTA
- MPCLSET

Enter the following tables in the correct entry order for the voice links between the DMS and the VSN.

- CLLI
- TRKGRP
- TRKSGRP
- TRKMEM

Automated Alternate Billing Service (continued)

- VSNOPT
- VSNMEMBR

The voice links are like any other trunk in the DMS. The first four tables identify the voice links and associated characteristics. The tables are CLLI, TRKGRP, TRKSGRP, and TRKMEM. One DMS trunk group contains voice links to the connected VSNs. Table VSNOPT identifies the trunk group that connects to the VSNs. Table VSNMEMBR indicates which voice link goes to which VSN. You can enter a maximum of 96 voice links for each VSN. Datafill examples below illustrate the datafill for the above tables.

The datafill for the data and voice links appear in the configuration in the following figure. In the following figure, the DMS connects to two VSNs. Two data links and three voice trunks transfer to each VSN.

Automated Alternate Billing Service (continued)

Possible Data/Voice Link Configuration

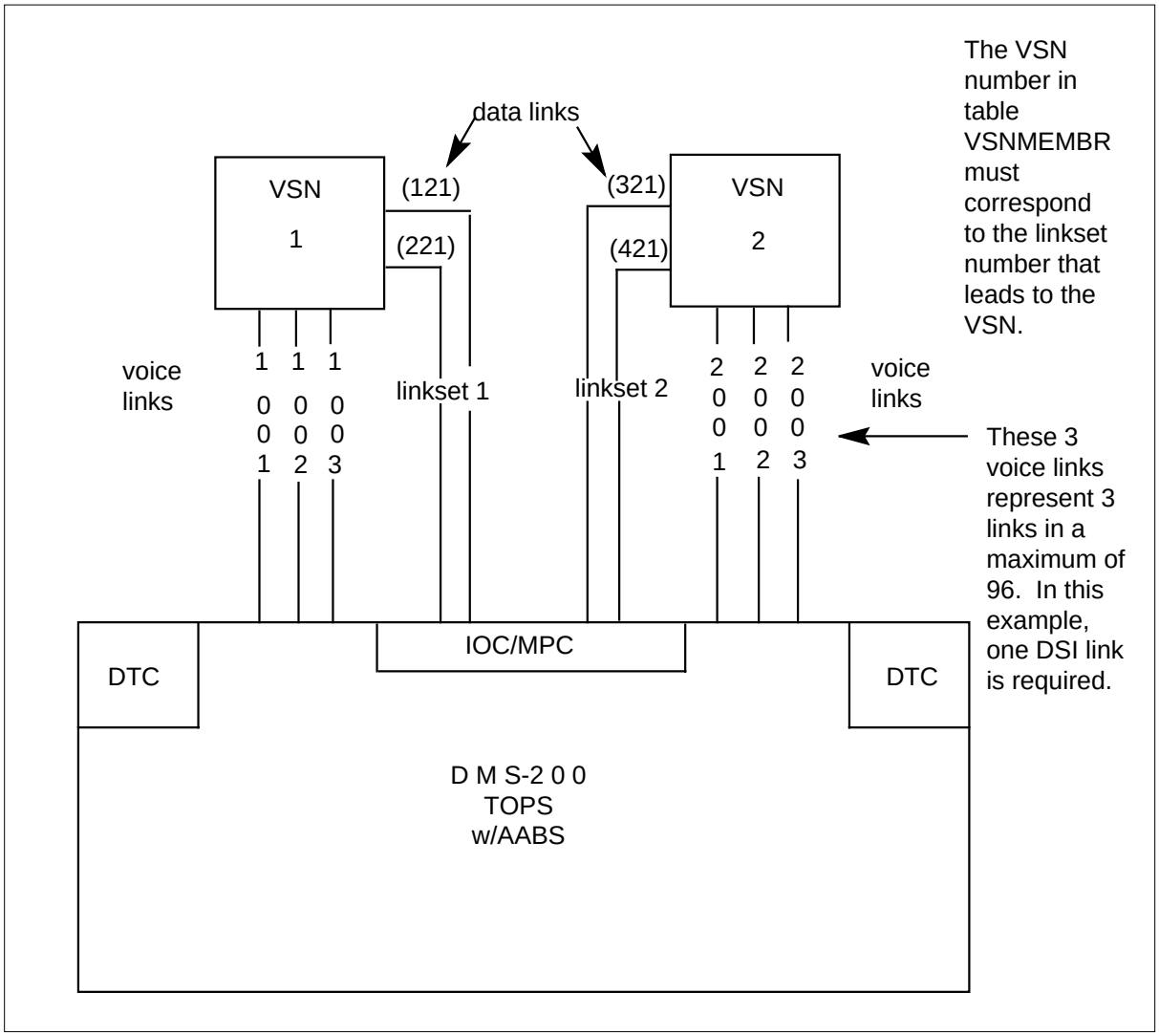

Note: The datafill in the following pages appears for information purposes. Do not use this datafill to configure an office.

Enter tables for the data links first. The first table entered is table TOPSVNIN. Table TOPSVNIN identifies the application and the protocol to use on the data links. The application is AABS in this event. This identification is necessary for applications that have external interfaces that a number of vendors can allow. The AABS is the only possible entry in this table. Sample datafill for table TOPSVNIN appear in the following example.

Automated Alternate Billing Service (continued)

MAP example for table TOPSVNIN

```
 KEY     APPLN                PROTOCOL     DATALINK
-------------------------------------------------------
  1       AABS                  TABS         MPC
```

See the data design section of the *Translations Guide* for additional information on the tables in this section.

The next table entered is table MPC. Table MPC defines the MPC hardware to the DMS. One entry or tuple is for each MPC card in the office. Four entries are available in table MPC for the design in the earlier figure. These entries appear in the map example for table MPC. For reliability, each of the data links to the VSN must be on a different MPC card. Each MPC card is on a different IOC.

MAP example for table MPC

```
 MPCNO   MPCIOC  IOCCCT    EQ      PROTOCOL   DLDFILE
-----------------------------------------------------
   1        3       4     1X89AA    X25LINK    MPCX103B
   2        2       8     1X89AA    X25LINK    MPCX103B
   3        4       4     1X89AA    X25LINK    MPCX103B
   4        5       4     1X89AA    X25LINK    MPCX103B
```

The datafill indicates that four MPC cards are available. Each card is on a separate IOC shelf.

- MPC 1 is on IOC shelf 3, card slot 1
- MPC 2 is on IOC shelf 2, card slot 2
- MPC 3 is on IOC shelf 4, card slot 1
- MPC 4 is on IOC shelf 5, card slot 1

The IOCCCT field refers to the card slot number on the IOC shelf. To obtain the card slot number, obtain the figure entered in the IOCCCT field, and divide by four.

The next table entered is table X25LINK. Table X25LINK contains the protocol data for the MPC. The MPC card can connect four links. The DMS uses links 2 and 3. The LINKNO field in table X25LINK reflects this information. The MPC number entered in the MPCNO field in table

Automated Alternate Billing Service (continued)

X25LINK is from the MPCNO field of table MPC. Link 2 on MPC 1, 2, 3, and 4 that connects to the VSN appears in the following MAP display.

Note: The X.25 parameter settings depend on modem clocking.

MAP example for table X25LINK

```
INDEX  MPCNO  LINKNO  LINKNABL  CONVNABL
PARMS
EXTRAINF
------------------------------------------------------------
     1     1       2        55         55
(STANDARD  CCITT80) (NUMPVCS 1) (N2 3) (L2WINDOW 7)
(TIDLE 15) (TINACTIVE 6) $
   2     2       2        55         55
(STANDARD  CCITT80) (NUMPVCS 1) (N2 3) (L2WINDOW 7)
(TIDLE 15) (TINACTIVE 6) $
   3     3       2        55         55
(STANDARD  CCITT80) (NUMPVCS 1) (N2 3) (L2WINDOW 7)
(TIDLE15) (TINACTIVE 6) $
   4     4       2        55         55
(STANDARD  CCITT80) (NUMPVCS 1) (N2 3) (L2WINDOW 7)
(TIDLE 15) (TINACTIVE 6) $
```

The next table entered is table MPCFASTA. Table MPCFASTA assigns MPC logical links to an application. This assignment allows the MPC to send messages to the correct destinations. This table specifies data link 2 on the MPC 1, 2, 3, and 4 for the AABS application to use. Table MPCFASTA identifies the audit frequency for each logical data link number. The MPC checks the data link for sanity if a data link is idle for longer than the audit frequency.

The following MAP example for table MPCFASTA provides the datafill for the plan in the earlier figure. The INDEX field identifies the application name for the data links. In this event, add TOPSVSN to the INDEX field range for the AABS application.

The DMS communicates with the VSN across the MPC data links. Each conversation occurs on a logical link. Another name for the logical link is an MLC (MPC number, Link number, Conversation Number). The MLCLIST field of table MPCFASTA identifies the MLCs. In the example, four MLCs are for the AABS application. Three numbers identify each MLC. The first

number identifies the MPC card. The second number identifies the link on the card. The third number identifies the conversation number on the link.

Note: The conversation number must be 1. A maximum of 16 MLCs can be associated with a single application.

MAP example for table MPCFASTA

```
INDEX  AUDITFRQ    UNITS    RECOVERY
MLCLIST
-------------------------------------------------------------
TOPSVSN   30       SECONDS   ENHANCED
(1 2 1)   (2 2 1)   (3 2 1)   (4 2 1) $
```

The last table to enter for the data links is table MPCLSET. Table MPCLSET groups data links in a linkset. Table MPCLSET associates the linkset with an application. A linkset is a group of data links that transfer to the same place of an application.

The datafill for the previous figure appears in the following MAP example for table MPCLSET. MLC (1 2 1) and (2 2 1) that are grouped in one linkset appear in the datafill. This linkset transfers to VSN 1. MLC (3 2 1) and (4 2 1) in another linkset transfers to VSN 2.

Linksets are important when a data link to the specified VSN fails. The DMS can switch messaging to another data link in that linkset without an interruption in service.

MAP example for table MPCLSET

```
 LSETKEY                          MLCLIST
-------------------------------------------------------------
TOPSVSN 1                      (1 2 1)  (2 2 1) $
TOPSVSN 2                      (3 2 1)  (4 2 1) $
```

The user enters the voice links like the user enters trunks. The voice links must comply with the following standards:

- Links must be from group type TOPSVL.
- Link selection sequence must be most idle.
- Link circuits must be outgoing.
- Links must have nonstandard supervision and signaling. The DMS does not have to seize and wait for a wink before the DMS uses the trunk.

Automated Alternate Billing Service (continued)

- Do not perform outpulsing over these trunks.
- Start signal of the voice links must be immediate.
- Links must have the Remote Make Busy (RMB) option enabled. Set the RMB field of table TRKSGRP to Y (Yes).

The first table entered for the voice link is table CLLI. Table CLLI identifies the CLLI name for the voice link group. Refer to note. The following MAP example for table CLLI indicates the voice link group CLLI. This voice link group CLLI is for the voice link group that connects the DMS and the VSN. This CLLI identifies the voice link group size. In this event, voice link group AABSVL contains six voice links.

Note 1: The TRKGRSIZ field identifies the number of voice links for the complete VSN application. You can enter a maximum of 96 voice links.

Note 2: In this document, the use of the term voice link is the same as the term trunk member.

MAP example for table CLLI

```
CLLI    ADNUM     TRKGRSIZ                    ADMININF
-------------------------------------------------------------
AABSVL  80          6                  AABS_VOICE_LINKS
```

Note: The AABSVL is not a fixed CLLI. The customer defines the AABSVL.

The next table entered is table TRKGRP. Table TRKGRP identifies the trunk group type and the characteristics associated with the trunk group. For the AABS application, the voice link group type must be TOPSVL. This voice link type appears in the following MAP example for table TRKGRP. The MIDL (Most Idle) identifies the selection sequence for the voice links. The selection sequence is one of the requirements for voice links to the VSN.

MAP example for table TRKGRP

```
GRPKEY      GRPINFO
---------------------------------------
AABSVL     TOPSVL  31  NPDGP  NCRT  MIDL
```

The next table entered is table TRKSGRP. Table TRKSGRP identifies the signaling characteristics of each trunk in the trunk group. The following MAP

example for table TRKSCRP identifies the characteristics for the voice links in voice link group AABSVL.

The voice links entered in the MAP example meet the requirements for these type of trunks. These requirements include the following:

- The circuit is outgoing (OG).
- The pulse type is No Pulse (NP). This type indicates that the DMS does not outpulse over these trunks.
- The start signal for the link is immediate (IM).
- The Remote Make Busy option is enabled (RMB field set to Y).

MAP example for table TRKSGRP

```
SGRPKEY    CARDCODE                                  SGRPVAR
-------------------------------------------------------------
AABSVL        0     DS1SIG  STD OG NP IM 7 0 NO NO N N Y 70
                                                       |
                                                  RMB field
```

The next table entered is table TRKMEM. Table TRKMEM identifies the location of each trunk member. The following MAP example for table TRKMEM indicates that voice links AABSVL 1001 through 1002 are on DTC 1. Voice links AABSVL 2001 through 2003 are on DTC 0.

MAP example for table TRKMEM

```
CLLI       EXTRKNM  SGRP         MEMVAR
-----------------------------------------------------
AABSVL      1001     0       DTC 1 2  1
AABSVL      1002     0       DTC 1 2  2
AABSVL      1003     0       DTC 1 2  3
AABSVL      2001     0       DTC 0 0  1
AABSVL      2002     0       DTC 0 0  2
AABSVL      2003     0       DTC 0 0  3
```

Enter the voice link CLLI in table VSNOPT, parameter VOICE_LINK_CLLI. This parameter indicates to the DMS which trunk group to use to connect to all VSNs. Identify all trunks to the DMS and inform the DMS to which VSN each voice link connects. This information is necessary because the DMS connects to multiple VSN. Table VSNMEMBR identifies to which VSN each voice link connects. The following MAP example indicates that voice links 1001 through 1003 connect to VSN 1 and voice links 2001 through 2003

Automated Alternate Billing Service (continued)

connect to VSN 2. Derive the number (1 or 2) in the VSNNUM field from table MPCLSET. Table MPCLSET assigns the linksets to each VSN.

MAP example for table VSNMEMBR

```
VSNMEM                  VSNNUM
-------------------------------------------------------
 1001                     1
 1002                     1
 1003                     1
 2001                     2
 2002                     2
 2003                     2
```

Note: Field VSNNUM equals field SETNUM in table MPCLSET.

WARNING
Voice links must be the same.
The voice link identifiers (1001 to 2003) must be the same at both ends. The VSN and the DMS must recognize voice link 1001 as the same circuit.

Determining if a Call Can Route to a VSN

When a 0+ call arrives over a TOPS trunk, the DMS performs the following checks. The check determines if the call can provide AABS handling. The call must pass the following checks to qualify for AABS handling. The call must pass the following checks before the call can be routed to the VSN.

- The call cannot be from a rotary station.
- The DMS receives the Automatic Number Identification (ANI) digits successfully.
- The Originating Station Treatment (OST) specified in table AABSOST must indicate that AABS is present. The AABS is present for the trunk group over which the call arrived. Table AABSOST can indicate a Billing Validation Authority (BVA) OST query. This query determines the OST for the call. The OST indicates if the AABS is present for the call.
- If the call is from a hotel, set the No Charge (NC) field in table SPLDNID to N (no). If the NC field is Y (yes), route the call to an operator to obtain the room number. The AABS does not handle the call.

Automated Alternate Billing Service (continued)

- The user can enter a billing limit in table SPLDNID against the originating station. The originating station must allow at least one of the following billing types to consider the call for AABS handling.

  — Collect

  — Third Number

  — Calling Card

- The called number is a domestic directory number. The user can enter the area in table DOMBILL against the number in table REGNUM. Set the Person Only (PERONLY) field in table DOMBILL for that area to N.

  Table DOMBILL specifies if collect call limits associated with the number are available. Field COLLECT in table DOMBILL can specify if collect calls are denied (COLLECT=DEN). Field COLLECT in table DOMBILL can specify if person collect calls are allowed (COLLECT=PER). A limit on a collect call does not disqualify the call from AABS handling. A limit on a collect call does limit the billing methods available to the calls. This information is passed to the VSN when the system routes the call to the VSN. This action assumes the call passes all of the other checks. The VSN is told that collect billing is not allowed for the call.

- The called number can be an overseas directory number. When this condition occurs, enter the country in table OVSBILL against the number in table COUNTRY. Set the Person Only (PERONLY) field in table OVSBILL to N.

  Table OVSBILL specifies if collect call restrictions associated with the number occur. Field COLLECT in table OVSBILL can specify if collect calls are denied (COLLECT=DEN). Field COLLECT in table OVSBILL can specify if person collect calls are allowed (COLLECT=PER). A collect call limit on a call does not prevent the call from AABS handling. A collect call limit limits the billing methods available to the call. The VSN receives this information when the system routes the call to the VSN. The system routes the call if the call passes every check.

- The operating company must provide services for the carrier associated with the call if the call is an InterLATA call. The field Operator Service (OPSERV) in table TOPEACAR must be set to SERV. If the call is an InterLATA call, set the Automate Zero Plus (AUTZPLUS) field in table TOPEACAR to Y for that carrier.

- The call must be a station call.

Automated Alternate Billing Service (continued)

If a 0+ dialed call passes all of the earlier checks, the following occurs:

- the DMS assigns a Call Identifier (Call ID) to the call.
- selects a voice link to the VSN.
- starts messaging over one of the data links associated with the selected voice link.

If the call is from a coin telephone, the DMS activates the keypad before the DMS presents the call to the VSN.

If the call fails an earlier check, the system considers the call for Mechanized Calling Card Service (MCCS). If the call fails a check, the system routes the call to an operator.

Consider a call for MCCS handling after the call fails the AABS checks under one condition. This condition is when table AABSOST indicates that AABS is not provided for the trunk group over which the call arrived. When these conditions occur, consider the call for MCCS handling. If the call fails the MCCS checks, the system routes the call to an operator.

In some events, zero plus calls result in a query to a BVA that determines AABS qualification. These zero plus calls are not considered for MCCS handling. If the system does not allow AABS on these calls, the system routes the call to an operator.

Selecting the Data and Voice Link and Sending the Call to the VSN

The DMS determines that the call qualifies for AABS handling. The DMS assigns a Call ID to the call. The DMS selects a voice link to the VSN. The DMS selects a voice link on the most idle base.

> ***Note:*** If a voice link is not available, the system considers the call for MCCS handling or routes the call to an operator.

The selection of a voice link occurs. The DMS arranges a two-way connection through the network between the originating trunk and the voice link.

A set of data links are associated with each voice link. These data links connect the DMS to the VSN. The DMS requests a data link from the MPC. The MPC provides the DMS with the number of the most idle data link. This data link connects the DMS to the VSN terminating the selected voice link. To start communication over the data link, the DMS sends a Call Begin message. This Call Begin message includes the called number and the voice link identifier. The voice link identifier informs the VSN that a call that requires AABS handling attaches to a voice link.

Automated Alternate Billing Service (continued)

The VSN receives the Call Begin message from the DMS. The VSN prompts the subscriber for additional information to continue with the call.

The VSN obtains the method of payment for the call from the calling party. The calling party can select the following methods of payment:

- make the call collect
- charge the call to a third number
- charge the call to a calling card number
- request connection to an operator. For example, if the subscriber wishes to make the call person-to-person, the subscriber requires operator support.

The VSN obtains the method of payment. The VSN sends the information to the DMS for billing validation. The DMS responds with the result of the billing validation check. Refer to Billing Validation Checks in this document for additional details on the billing checks that the DMS performs.

The DMS responds to the billing validation checks with a possible result that follows:

- The DMS denies the method of payment that the calling party specified for the call. The DMS prompts the calling party for an alternate method of payment or aborts the call. The choice depends on the VSN implementation.
- The DMS requires manual validation to verify the method of payment. This event requires an operator. The VSN requests the DMS to connect an operator. The VSN terminates communication with the DMS for that call.
- The DMS requires billing acceptance from the billed party. The VSN messages the DMS. The VSN requests a connection of the billed party to obtain billing acceptance.
- The DMS accepts billing. The VSN messages the DMS to float the call. The DMS floats the call to connect the calling and called parties. The VSN waits for a Call End message. The Call End message indicates end of communication with the DMS for that call.

When the DMS requires billing acceptance from the billed party, the following additional interactions occur between the DMS and the VSN.

Collect Number Billing Acceptance

For a collect call, the VSN requests a connection of the called party. After the DMS connects the calling party and the called party with the VSN, the DMS messages the VSN. The DMS indicates a successful connection. The DMS monitors the called party for a change in hook status. The DMS detects

Automated Alternate Billing Service (continued)

off-hook by the called party. When the forward party answers, the DMS sends a message to the VSN. The VSN requests that the DMS change the speech path of the calling party to a one-way connection. This change allows the calling party to listen to the conversation between the VSN and the called party. The VSN and the called party cannot hear the calling party.

The VSN may request a zero-way connection. In a zero-way connection, the calling party does not hear and the VSN and called party do not hear the calling party. The DMS responds with a message that indicates a successful change to the connection. The VSN changes the speech path state of the calling party after the forward party answers. The VSN waits for the called party to answer to allow the calling party to listen to call progress tones. The VSN obtains billing acceptance from the called party. The VSN sends a message to the DMS that indicates that the call is complete. The DMS sends a Call End message to the VSN. The VSN completes handling of the call.

Third Number Billing Acceptance

When a call requires third number billing acceptance, the VSN makes sure that time of day limits are not in effect. The VSN also requests a connection of the third party. The VSN obtains a conference port for the call to connect the calling party and the third party. The DMS responds with a message that indicates a successful connection. The DMS monitors the forward party for a change in hook status. The DMS detects off-hook by the forward party. The DMS sends a message to the VSN that indicates when the forward party answers. The VSN can request that the DMS change the connection of the calling party to a one-way connection. This change allows the calling party to listen to the conversation between the VSN and the third party. The VSN and the third party cannot hear the calling party. The VSN can request a zero-way connection. The calling party cannot hear or be heard.

The DMS returns a positive response. The VSN obtains billing acceptance from the third party. The VSN sends a message to the DMS. This message requests a release of the forward (third) party from the call. The DMS responds with a message. This message indicates a broken connection. The VSN informs the subscriber of satisfied billing. The VSN sends a message to the DMS with a request for call completion. The DMS responds with a Call End message to the VSN. The DMS completes the call to the called party.

When a Voice Link Will Not Be Selected

The DMS considers voice links available to route calls to the VSN when the links are in the idle state.

Automated Alternate Billing Service (continued)

The DMS does not select a voice link when one of the following conditions occurs:

- The VSN is off-hook on the voice link for load control reasons. The voice link is in a Remote Make Busy (RMB) state. In this state, the DMS cannot select that voice link.
- The VSN detects a carrier fail on the voice link. The VSN places the voice links on that DS1 in a System Busy (SYSB) state.
- A correct entry in not available in table VSNMEMBR.

What Happens When Communication with the VSN Is Lost?

The call setup is with the VSN. The VSN requests actions for the call. A loss of the voice or data link occurs. The DMS takes down the call, terminates messaging with the VSN, and frees resources that relate to the call.

The VSN does not have the resources to handle the call. The VSN does not request actions for the call. The VSN informs the DMS that the VSN does not have the resources to handle the call. The DMS terminates messaging for the call and breaks all connections to the VSN. The DMS frees the voice and data connections to the VSN. The DMS hands the call to the MCCS or to an operator.

Note: The VSN resources not available indication is not common. This indication occurs when the VSN cannot place voice links in a RMB state. In the RMB placement, the DMS does not send more calls than the VSN can handle.

Billing validation checks

When the VSN receives the call, the VSN prompts the subscriber to specify the method of payment for the call. The subscriber has three options: collect, calling card, and bill-to-third.

The subscriber indicates the method of payment. The VSN sends a message (Action Request message) to the DMS. The message indicates the class charge for the call. The class charge for the call is Station Special Calling (STA SPL CLG) for calling card and third number billing. The class charge for the call can be Station Collect (STA COL) for collect billing. The VSN requests validation of the billing number.

The DMS class charges the call as the VSN instructs. The DMS performs the checks on the billing number. The DMS sends the results to the VSN.

Automated Alternate Billing Service (continued)

The first check the DMS performs is a format check on the billing number. The billing number must be in one of the following formats to pass the format check.

- the NPA-NXX-XXXX (Domestic third)
- the 0/1XX-XXXX-RAO (10-digit Special Billing Number or QZ code)
- the NPA-NXX-XXXX-YYYY (Domestic Credit Card)
- the RAO-0/1XX-XXXX-YYYY (14-digit Special Billing Number)

where

- The NPA is an correct area code entered in table NPACHECK.
- The second digit must be 0 or 1.
- The 0/1 means the Special Billing Number begins with 0 or 1.
- The RAO is the Revenue Accounting Office Number in tables RAO and RAOCHECK.
- The X is a digit that ranges from 0 to 9.
- The YYYY is a four-digit Personal Identification Number (PIN).

If the billing number is a special billing number, the billing number must pass special digit and RAO validity checks. This action involves a check of tables CHKDIGIT, RAOCHECK, NPACHECK, and RAO. When the billing number is a QZ code, perform the checks in QZ Code Checks. The system performs the checks in QZ code checks when the billing number is a 10-digit Special Billing Number.

The following checks apply to all other billing numbers that pass the format check:

- The DMS checks table HOTLIST to make sure that the billing number does not appear. If the billing number appears in table HOTLIST, the DMS messages the VSN. The DMS denies billing in this message.
- The DMS checks the billing number for any domestic billing limits. This action involves a check of tables REGNUM and DOMBILL. The DMS checks table REGNUM first. If the DMS finds the billed number in table REGNUM, the DMS checks table DOMBILL. This check determines the domestic billing limits associated with the area entered against the billed

number in table REGNUM. Table REGNUM associates domestic area names to third numbers and credit card number.

Table DOMBILL identifies the regions. You can specify the following limits for each area and for each billing number:

— station and person collect limit

— station rate call limit

— third number limit

— calling card limit

If a billing number does not appear in table REGNUM, domestic billing limits do not apply to the billing number. If the call is an overseas call, the following procedure occurs. The DMS checks tables COUNTRY and OVSBILL in the same method as tables REGNUM and DOMBILL. This check determines if the DMS allows the billing selected.

If any check fails, the DMS sends a Call Update message to the VSN. This message indicates that the DMS denies billing.

For collect calls, the domestic billing limit check can require a manual record of the name of the called party. To do this check, set field COLLECT in table DOMBILL to MAN. When this check occurs, the validation result message sent to the VSN indicates an operator requirement to complete the call.

The Billing number passes the table HOTLIST and domestic billing limit checks. This check indicates that the billing number does not appear in table HOTLIST. This check indicates domestic billing limits do not apply to the billing number. When this condition occurs, the DMS sends a query to one of the following. The DMS sends a query to a Line Information Data Base (LIDB) or a Billing Validation Authority (BVA) center. This query allows the DMS to obtain available database information stored against the billing number. This DMS query is another query. This query is not the same query the DMS sends to determine if the AABS is eligible.

The database query can result in one of four possible results. The DMS passes these results to the VSN in the Call Update message:

- A denial of billing.

  The VSN Action: The VSN informs the subscriber that the method of payment is not acceptable. Dependent on VSN installation, the VSN asks the subscriber to input another method of payment. The VSN can request

Automated Alternate Billing Service (continued)

the DMS to perform another validation. The VSN can abort the call and message the DMS. This message is to abort the call.

- Billing number requires manual validation.

  The VSN Action: The VSN informs the subscriber of an operator connection to assist in the completion of the call. The VSN sends a request to the DMS to connect the call to an operator. The DMS terminates messaging to the VSN for the call. The DMS queues the call for an operator. Refer to Connect the Subscriber to an Operator for details on operator handling of the call. Refer to Manual Validation in this document for additional details on manual validation.

- Billing acceptance required. This action applies to collect or third number billing only.

  The VSN Action: The VSN informs the subscriber of obtained billing acceptance. The VSN messages the DMS to request a connection of the billed party. This action allows the VSN to accept the charges. Refer to Network Communications in this document for details on how to connect the billed party.

- The VSN automatically accepts billing.

  VSN Action: The VSN informs the subscriber of the connected call. The VSN requests the DMS to complete the call. Refer to Ending Communication with the VSN in this document for details on how to complete the call.

The DMS does not receive a correct database response. A number of conditions determine the response the DMS sends to the VSN. The VSN action depends on VSN implementation.

- The DMS does not receive a response to a calling card validation (CCV) query sent to a LIDB. The DMS checks the setting of the TOPS_ACCS_CCV_QUERY_BLOCK parameter.
  - — If the parameter is Y, the DMS informs the VSN of a denial of billing.
  - — The parameter is N. The DMS informs the VSN that the DMS did not obtain a database response. The VSN can deny the call or allows the call to complete.
- The DMS does not get a response to a CCV query sent to a BVA. The DMS informs the VSN that the DMS did not obtain a database response. The VSN can deny the call or allow the call to complete.
- The DMS does not receive a response to a Billing Number Service (BNS) query sent to a LIDB or a BVA. The DMS informs the VSN that the DMS

did not obtain a database response. The VSN performs one of the following:

— denies billing

— refers to call to an operator for manual validation

— accepts billing (allows the call to complete)

— attempts to obtain billing acceptance from the billed party.

Manual Validation

Manual validation is necessary when one or more of the following conditions occur. The DMS performs a database query for the following conditions.

- The calling party selects collect billing. The domestic billing limit check (tables REGNUM and DOMBILL) indicates the following. You must obtain a manual record of the name of the called party. Set field COLLECT in table DOMBILL to MAN.
- Table TOPEACAR indicates a manual validation must occur for InterLATA calls the operating company handles for a specified carrier. The operating company contracts with the carrier to provide operator services for these calls. If you require manual validation, the CCVVAL field is Y for calling card calls. The BNSVAL field is Y for third number calls. The COLVAL field is Y for collect calls. This setting applies to queries to a BVA only.
- Table CCVPARMS indicates a manual validation must occur for the billing number. Set field VALTYPE to MANUAL.

For the earlier conditions, the DMS does not send a database query to determine a requirement for manual validation. The database response can indicate a requirement for manual validation.

QZ Code Checks

The format check is complete and the billing number is a QZ code. The QZ code is a 10-digit Special Billing Number. When this condition occurs, the DMS performs the following checks:

- The class charge the VSN specifies is Station Special Calling. The billing number type is Third Party Directory Number. TOPS considers third numbers QZ codes.
- A check of table VSNOPT determines an allowance of special billing. Parameter SPL_SPL_BILLING_ALLOWED is Y.
- The called number must be a domestic number. The called number cannot be an overseas directory number.

Automated Alternate Billing Service (continued)

- The billing number must not be in table HOTLIST.
- A check of table REGNUM occurs for any billing limits that apply to the billing and/or called number. Table REGNUM associates domestic area names to third numbers and credit card number. Table DOMBILL identifies the numbers. The following limits can apply to each area:

  — calling card limits

  — third number limits

  — station and person collect limits

  — station rate call limits

  Table REGNUM maps an area to a third or calling card number. If a number does not appear in table REGNUM, domestic billing limits do not apply to the number.

Network Connections

In response to a VSN request, network connections establish or change. When the VSN requires a network action, the VSN sends an Action Request message to the DMS. This message indicates the action the VSN needs performed. The DMS performs the requested network action. The DMS sends a message to the VSN to indicate completion or failure.

Note: The VSN determines the network connections required for a call. The DMS responds to the requests from the VSN.

The following are the network connections that the VSN can ask the DMS to establish for an AABS call:

- connect the called or third party
- release the called or third party
- release the calling party
- change the speech path of an connection that is available to a two-way speech path, a one-way speech path, or a zero-way speech path

The VSN can requests the DMS to connect called or third party (establish a forward connection). This connection allows the DMS to obtain billing acceptance for a call billed collect or to a third number. When the DMS obtains billing acceptance, the VSN informs the DMS must release the connection.

When the call connects to the VSN, a direct path occurs between the voice link and incoming TOPS trunk group. The VSN can request connection of a called or third party for billing acceptance. This action requires a three-port

conference circuit. The three-port conference circuit remains connected until the DMS floats or aborts the call. A call float occurs when calling and called parties connect.

A diagram of a three-port conference circuit connection appears in the following figure.

Three-Port Conference Circuit Connection

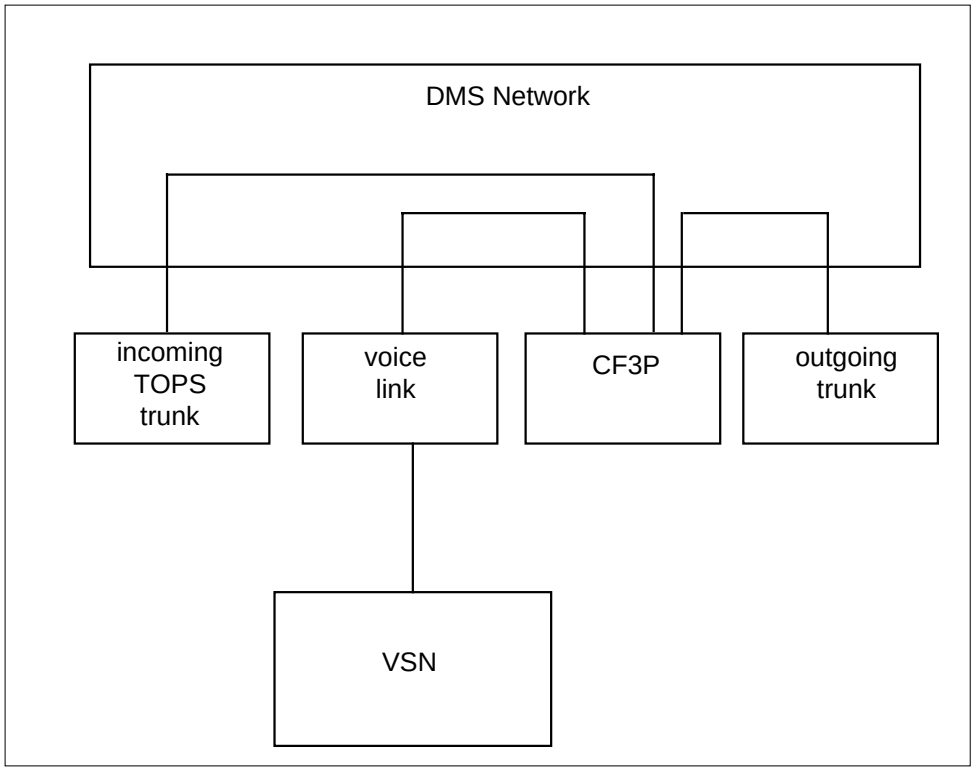

The DMS monitors the connections of the calling, called, or third party. The DMS informs the VSN of changes in the state of these connections. This information allows the VSN a correct response. The calling party can go on-hook when a connection to the billed party (called or third) remains. When this condition occurs, the VSN must request release of the calling party. This release occurs so that the calling party can make additional calls. The VSN can play an announcement to the billed party to indicate the calling party is on-hook. This action of the VSN depends on installation.

Automated Alternate Billing Service (continued)

Ending Communication with the VSN

The DMS can terminate or end communication with the VSN in the following methods:

- float the call (connect calling and called parties)
- abort the call
- refer the call to an operator

Float the Call

When the VSN completes the call, the VSN messages an Action Request to the DMS to float the call. This action connects the calling party to the called party to complete the call. When the DMS receives the message, the DMS terminates messaging to the VSN for the call. The DMS releases resources for the call (refer to note). The DMS completes the call to the called party if the called party is not connected.

Note: If a direct network connection cannot occur between the calling and the called parties, the three-port conference circuit does not release. The DMS attempts to make a direct connection every 30 s to release the three-port conference circuit.

After the DMS floats an AABS call, the AABS call does not return to the VSN for additional handling. For calling card calls, the VSN does not support sequence calling. To support sequence calling in the office, the MCCS or the ACCS software is present to handle sequence calls. If the office does not have MCCS or ACCS, sequence calls cannot occur.

Abort the Call

A number of conditions can cause a call to abort. These conditions include:

- normal termination when the calling party ends the call.
- not normal terminations for error or resource recovery.
- normal terminations when the VSN determines that handling must not continue. For example, the called party denies billing acceptance for collect calls or a third party denies billing acceptance for third number billed calls.

When a call aborts, the system releases all resources. The calling party receives a dial tone.

Calls abort when the VSN or DMS encounters an error condition that is not planned. The VSN can encounter a software or hardware error that prevents the VSN from completing the call. The VSN sends a request to the DMS to abort the call. The DMS informs the VSN that communication for that call is

complete. The DMS encounters the error condition that prevents completion of the call. When this condition occurs, the DMS aborts the call. The DMS informs the VSN that communication for that call is complete.

Abort call actions prevent the hold of resources that are not necessary. To make sure that recovery of DMS call resources occurs, the DMS times specified responses from the VSN. The ONHOOK_RECOVERY_TIMER parameter in table VSNOPT specifies how long the DMS waits before the DMS performs an abort call. This action occurs when all parties that connect to the call are on-hook.

The DMS times responses from the VSN under the following conditions. If the DMS does not receive an abort call message in the time specified in the ONHOOK_RECOVERY_TIMER parameter, the DMS aborts the call. The DMS messages the VSN that communication is complete for that call.

- The calling party goes on-hook and a forward party is not connected.
- The calling party goes on-hook when the forward party connects and is on-hook.
- The calling party disconnects and the billed (called or third) party goes on hook.
- The billed (called or third) goes on-hook when the calling party connects and is on-hook.

Connect the Subscriber to an Operator

The VSN can request to connect the subscriber to an operator at different stages in the call handling process. The following are the possible results when the VSN requests to connect the call to an operator:

- The calling party dials 0, flashes the switchhook, or times out after the first prompt for service selection from the VSN.
- The calling party does not make a correct service selection. This action depends on VSN installation. The VSN can allow the subscriber to retry or request an operator.
- The billing validation result indicates a requirement for manual validation.
- The calling party chooses collect billing for an overseas call.
- The VSN does not correctly collect the necessary information from the calling party. The VSN requires this information to perform collect or third number billing acceptance. Acceptance requires operator assistance.
- The VSN requests operator assistance during the billing acceptance stage of the call. The VSN requests assistance to obtain acceptance from the billed party. The VSN obtains assistance because the billed party (called

Automated Alternate Billing Service (continued)

or third) did not respond to the VSN prompt. The VSN can require assistance because the VSN cannot recognize the response. When these conditions occur, the VSN can allow the user to attempt again. Response timing can occur.

The VSN can send a message to the DMS with a request that the call connect to an operator. When this action occurs, the DMS terminates messaging with the VSN for that call. The DMS frees all connections and resources that relate to VSN link for that call. The DMS places the call in queue for an operator. Calls do not return to the VSN for handling after the VSN refers the calls to an operator.

When the VSN Cannot Refer an AABS call to an Operator

The VSN cannot request the DMS to connect a call to an operator when the following conditions occur.

- The VSN has a forward connection to a third or called party and the third or called party does not answer. The DMS enforces this condition to prevent the answer of calls when the calls are in the queue for an operator.
- A calling party is not connected to a call. A connection is not available to a calling party. The calling party is not on-hook. When this condition occurs, the call cannot be referred to an operator.

Queuing for an Operator

The call is queued, according to the call origination type, in table TOPS. Place a call in a queue when an operator is not immediately available to handle the call. The state of the AABS call during the request for an operator determines the following. The state determines if a call is placed in a recall queue or in a non-recall queue. The request for an operator is during the service selection stage of the AABS call. When these conditions occur, the call transfers in a non-recall queue. These calls receive the same queue priority as any 0+ call that does not receive AABS handling. This treatment occurs because a request or establishment of a forward connection is not available. Calls the DMS places in non-recall queues are subject to an audible ring.

The datafill in table TOPS specifies in which non-recall queue the DMS must place the call. The DMS places the calls in a non-recall queue if the VSN requests an operator in the following conditions:

1. The subscriber dials 0 after the VSN prompt for service selection.
2. The subscriber flashes switchhook after the VSN prompt for service selection.
3. The VSN times out when the VSN waits for subscriber input. This action occurs after the VSN prompts the subscriber to make a service selection.

Automated Alternate Billing Service (continued)

4. The subscriber chooses collect billing for an overseas call.
5. The billing validation check indicates that a calling card number requires manual validation.

For the first four earlier conditions, the call arrives at the Operator Position as any other 0+ call with the Special field indicated. The SPL # displays for TOPS. The cursor is in the SPL field for TOPS MP. For the manual validation condition, the VFY display follows the calling card number in the Special field. How the operator handles these VSN-referred calls does not differ from the current handling of MCCS calls for similar conditions.

Note: For an overseas call billed collect, the VSN does not pass billing information to the DMS. The DMS does not have an indication of the earlier selection of a billing method. The DMS displays the call with the Special field indicated, as described, instead of the Called field.

If the call is a coin call, the DMS returns the first deposit on connection to an operator or on call completion.

If a call has a third or called party connected, place the call in a recall queue. This queue does not receive audible ringing. The recall queue reduces the amount of time the call waits for an operator. A call can be queued for an operator with an established forward connection. Limit the voice path of the billed (third or called) party to prevent conversation. You prevent conversation between the calling party and the billed party. This prevention occurs when the call is in the queue and waits for an operator. The voice path of the calling party is not limited to allow the first conversation with the operator.

An additional number of operator screens informs the operator of the state of the call. These operator screen displays identify to the operator the calls that receive partial AABS handling. These displays identify if the billed party (called or third party) attaches or is forward connection established to the call. The screen in which the call is present, depends on the establishment of a forward connection. In either condition, the calls have all billing information present. Refer to Call Presentation Without a Forward Connection and to Call Presentation With a Forward Connection in this document for details.

The voice path of the billed party limits calls attached to the operator with a forward party connected. The billed party cannot speak to the operator or the calling party. The billed party cannot hear the exchange between the operator and the calling party.

Automated Alternate Billing Service (continued)

The addition of operator screens for TOPS and TOPS MP handle the following conditions. The screen displays allow quick completion of calls.

- Collect calls without the connection of the called party.
- Third Number calls without the connection of the third party.
- Collect Calls with the connection of the called party.
- Third Number calls with the connection of the third party.

Queue Deflection - Threshold Limit Reached

The system deflects non-recall queue calls because calls reach a threshold limit. The system never deflects calls for recall queues because the calls reach threshold limits.

When a call changes direction because a threshold limit occurs, the calling party receives treatment. This treatment is a tone or an announcement.

Queue Deflection - Overflow Condition

A queue overflow condition occurs when you exceed the number of possible calls the DMS can place in a queue. This action indicates an office provision that is not correct. Queue overflow does not occur in a correctly provisioned office.

Queue overflow conditions affect recall and non-recall queues. Calls for a nonrecall queue receive treatment. This treatment can be a tone or an announcement. The system handles calls with a forward connection for a recall queue as follows:

- The calling party receives treatment - tone or announcement.
- The release of a billed party occur.

Calling or Billed Party Go On-Hook While in Queue

If the calling party goes on-hook when in queue for an operator, hold the calling party on the call. The system presents the call to the operator. From the display, the operator knows the calling party is attached and on-hook. If the calling party goes back off-hook, the operator completes the call. If the calling party stays on-hook, the operator informs the billed party that the calling party has gone on-hook. The operator cancels the call.

If the billed party goes on-hook when the call is in queue for an operator, the DMS releases the billed party. The call remains in queue and transfers to an operator.

The billed party goes on-hook when the call is in the queue to wait for an operator. The DMS presents the call to the operator as if a connection to the billed party did not occur.

Call Presentation Without a Forward Connection

A display occurs of the billed number and the class charge of the call. This display occurs when a call that the VSN partially handles routes to an operator without a forward connection. A forward connection is present when a called or third party does not connect. Validated billing information is present. The operator does not need to class charge the call.

Screen messages 0+ COL and 0+3RD appear for collect and third number calls without a forward connection for TOPS and TOPS MP. Both displays indicate that VSN partially handled the call. This text identifier is entered in table VSNOPT. This text identifier replaces the display normally associated with calls that table TOPS determines.

The called number is a coin or denied. The customer stays off-hook and routes to the operator. When this condition occurs, the COL display does not appear on the operator screen. When AABS routes a call to the called or 3rd number party, the calling party receives a busy or verbal denied charges. The calling party stays off-hook. The call routes to an operator. The COL or 3RD display does not appear on the operator screen.

If the DMS billing validation check indicates the billing number is invalid, the billing information in the DMS clears. If the system presents a call in this state to an operator, the system presents the calls as a basic 0+ call (0+COL or 0+3RD does not appear).

The softkeys available on TOPS MP positions are context driven. Support occurs for softkey displays when the default text identifiers in table VSNOPT are in use.

Lower case displays are not possible on TOPS. If you want lower case displays for TOPS MP, enter the displays between single quotes. If you do not enter the displays between single quotes, the displays translate to upper case.

Call Presentation With a Forward Connection

The system can present a call that the VSN partially handled to an operator with a forward connection. This presentation occurs when the VSN fails to obtain billing acceptance from the billed party.

Screen messages CLDCON and 3RDCON appear for collect and third number calls with a forward connection for TOPS and TOPS MP. The displays indicate that the VSN partially handled the call. This text identifier is entered

Automated Alternate Billing Service (continued)

in table VSNOPT. This text identifier replaces the display normally associated with calls that table TOPS determines.

Note: The VSN informs the calling and billed party that the call routes to an operator. The VSN asks the parties to hold for help. When the call attaches to the operator, the system limits the speech path of the billed party. The billed party cannot speak to the calling party or the operator. The billed party cannot hear the exchange between the calling party and the operator.

For calls billed to a third number, the Cld field reflects the third number. This condition occurs when the third party connects on the forward port. If the operator needs the called number during billing acceptance, the operator must key the call details to obtain the called number.

Note: For TOPS MP positions, the system supports the softkey displays when the default text identifiers in table VSNOPT are in use. The default text identifiers are CLDCON and 3RDCON.

Completing Calls Referred to the Operator

The system presents the AABS calls with current screens. The system handles these calls like other 0+ calls the system operator receives for handling. The system obtains billing information, billing acceptance, and, if necessary, floats the call.

Collect calls with or without a forward connection require the operator to key START. The operator must key START to establish or restore the speech path to the called party. Third number calls with a forward connection use START to restore the speech path of the third party.

When the operator keys START to establish a forward connection, normally the operator hears outpulsing and ringing. The subscriber normally answers. For calls with a forward connection, the operator does not hear ringing when the operator keys START. The OPR_SIMULATED_OUTPULSING parameter in table VSNOPT can simulate this outpulsing sequence. The parameter simulates this sequence when the operator keys START on calls with a forward connection. If the parameter is Y, the operator hears abbreviated ringing. Abbreviated ringing is 100 ms on, 50 ms off, 100 ms on with a normal ringback tone of 440 Hz and 480 Hz.

The Cld field inverts on TOPS MP. The CLD1 appears on TOPS for the duration of the ringing. When the ringing stops, the system restores the speech path of the billed party (forward connection). The operator prompts the billed party for billing acceptance. If the user sets the parameter to N, the operator sees a brief outpulsing display. The operator does not see a display or hear ringing. For TOPS MP, the operator will neither see nor hear any item.

Use the simulated outpulsing to train operators. Train operators until the operators can handle AABS calls with forward connections already established.

AF3011 - AABS VSN Crossprocessor Restructure

The AABS provides automated billing for calls that normally require operator assistance. The AABS uses DTMF detection and speech recognition to allow automation of calling card, collect, and bill to third number calls. The current implementation uses off-DMS Voice Service Nodes (VSNs) to provide the voice capabilities.

The new Enhanced Services architecture allows the addition of VSNs directly to a Supernode/DMS. The ADAS is the first service that allows this feature. Message the VSN through the DMS bus. Message the voice link occurs through a Voice Processing Unit (VPU) channel, not a trunk.

Datafill is as follows:

- Table TOPSVNIN

  Modification of this table allows specification of voice links.

- Table VSNOPT

  Removal of field VOICE_LINK_CLLI occurs because the changes in table TOPSVNIN provide this function.

Earlier, table TOPSVNIN described the AABS application in terms of PROTOCOL (TABS) and feature DATALINK ,MPC or STUB, to provide this feature. To accommodate different types of voice links, trunk or VPU channel in this feature, table TOPSVNIN extends to describe voice links.

Earlier, the AABS assumed that all voice connections occur through trunks with CLLI TOPSVSN. The AABS assumed that table VSNMEMBR provided the mapping from trunk group member to VSN and the useable data link. At the present time, changes are not made to table VSNMEMBR. Table VSNMEMBR is only for one CLLI.

TOPS VSN tables

The following tables are not in the DMS. The following tables are in the TOPS VSN. These tables are for information purposes. Some of the datafill correlates with datafill in the DMS system.

The tables in the TOPS VSN of the NTI contain default data. The operating company can change the data on site. The first datafill works with the DMS

Automated Alternate Billing Service (continued)

with modifications incorporated in the installation procedures. The data tables in the VSN of the NTI offering are included here.

- Table T1-TRUNK ID MAPPING

  the DMS CLLI: AABS-DMS

MAP example for table T1-TRUNK ID MAPPING

```
CHAN          TRUNK       STATUS
NUM           IDENT
-----------------------------------------------
 01            0001       IN SERVICE
 02            0002       IN SERVICE
 ...        ...         ...
 24            0024       IN SERVICE
```

The channel numbers and trunk identifiers are assigned through the load build process. Channel numbers cannot change. Trunk identifiers can change. Change the default value assigned to the DMS CLLI on site. The trunk identifiers must match DMS table TRKMEM, Field EXTRKNM, and DMS table VSNMEMBR, Field VSNMEM. Table VSNMEMBR assigns each voice link to a VSN.

Installation modifies the DMS CLLI and the TRUNK IDENT with input from the operating company.

> ***Note:*** The DMS CLLI does not have to match a CLLI specified in DMS tables.

The MULTIPLE VSN APPLICATIONS are more than one VSN for each DMS:

Each VSN has a separate table. The VSNs do not communicate with other VSNs. The VSNs only communicate with the DMS. The TRUNK IDENT numbers must be different for all VSNs associated with a single DMS. The first digit of the trunk identifiers must correspond to the VSN number for that trunk in DMS table VSNMEMBR.

- Table DATALINK CONFIG

MAP example for table DATALINK CONFIG

```
LinkName     DMS CLLI     X.25 PRU    VSN CL PRU
--------    ----------    --------    ----------
VSN-1        AABS-DMS    82200000     94410000
VSN-2        AABS-DMS    82200001     94410000
```

The table initializes with the default values that appear. The customer can only change fields LinkName and DMS CLLI. The control link PRU uses the DATALINK_CONFIG to determine the links the PRU manages. The LinkName on OMs and LOGs. The DMS CLLI matches the field assigned in the T1-Trunk ID Mapping table.

The Installation Manual for TOPS VSN (Sections 5775-5781) refers to *TOPS VSN Customer Forms,* for entry options. Complete these options as part of the installation process. Change the DATALINK_CONFIG fields LinkName and DMS CLLI through Installation in consultation with the operating company.

- Table USER INTERACTION

  This table contains default values that appear in *TOPS VSN Customer Forms*. The operating company can erase values to meet requirements.

  Default values that impact call processing appear in the following table. The *TOPS VSN Customer Forms,* contains the complete list of User Interaction parameters:

TOPS VSN Table User Interaction

Parameter	Default	Result
CCV_QUERY_FAIL_ACC _BILL	YES	The VSN accepts billing when the CCV query cannot obtain a correct response.
VERIFY_COIN	YES	Verify the 3rd number billing on coin calls.
BNS_QUERY_FAILURE	VERIFY	The VSN performs verbal verification on BNS queries that cannot obtain a correct response.
BILLING_DENIED_ACTION	ALTBILL	The TOPS VSN plays the service selection message when a denial of billing occurs.
PRISON_SCREENING _CODE	74	The screening code 74 in a message from DMS identifies the call as prison for special treatment. Refer to RECORD_NAME_PRISON and PRISON_MSG_DTMF_INTER parameters.

- Table SCREENING CODES

Automated Alternate Billing Service (continued)

MAP example for table SCREENING CODES

```
SCREENING CODE                              ACTION
-------------------------------------------------------
85                                          VERIFY
88                                          VERIFY
89                                          VERIFY
98                                          VERIFY
99                                          VERIFY
```

Table SCREENING CODES contains the default data that appears in the preceding example. The SCREENING CODE is the value of BILCLASS in table RESTBIL. The DMS sends these codes to the VSN. The Screening Codes table defines how the VSN handles each code.

This table is for 3rd number billing calls when the database query result is automatic accept or verbal verification. Access table SCREENING CODES to determine the action for the VSN to take. Selections are:

```
ACCEPT - VSN informs subscriber and floats call

VERIFY - VSN checks time of day parameters before VSN
initiates 3rd number verification callOPERATOR - VSN
transfers call to live operator
```

If the screening code is not found, use the action defined in the external database (LIDB or BVC).

```
ACCEPT - Accept the billing method the calling party
specifies.

VERIFY - Credit card or 3rd number billing only accepted if
an external database verifies the billing.tOPERATOR - Calls
with this screening code require live operator handling.
```

- VSN DIGIT TIMING

Automated Alternate Billing Service (continued)

The operating company can alter the default values that follow.

Default values for table TOPS VSN DIGIT TIMING

Digit timing parameter	Value in deci-second
BONG_ONLY	30
BONG_N_PROMPT	10
AFT_PROMPT	50
AFT_ERR_PROMPT	30
BONG_CC_ALTBILL	30
CC_ERR_PROMPT	50
INTERDIGIT	50
INTERFIELD	60
AFT_10DIGITS	50
CC_INTERDIGIT	70
AFT_4_DIGITS_PIN	20
REQ_OP_ON_ERR	30
REQ_OP_CLT_ONLY	30

- Table VSN RETRY COUNTS

  Retry count parameters control dialing, name recording, voice recognition, and service retries. Default values appear in this table. The operating company changes the parameters as required.

Default values for table TOPS VSN RETRY COUNTS

VSN Retry Count Parameters	Value
DIALING_NO_RESPONSE	1
DIALING_FORMAT_ERROR	1
DIALING_TOTAL_RETRY	2
NAME_NO_RESPONSE	1
NAME_FORMAT_ERROR	1

Automated Alternate Billing Service (continued)

Default values for table TOPS VSN RETRY COUNTS

VSN Retry Count Parameters	Value
NAME_TOTAL_RETRY	1
BILLING_NO_RESPONSE	1
BILLING_REJECT_ERR	1
BILLING_TOTAL_RETRY	1
CALLING_CARD_RETRY	1
NO_RESP_1ST_SS	0
THIRD_NUM_ALT_BILL	1

Translations table flow

The Automated Alternate Billing Service translation process appears in the following flowchart.

Automated Alternate Billing Service (continued)

Table flow for Automated Alternate Billing Service

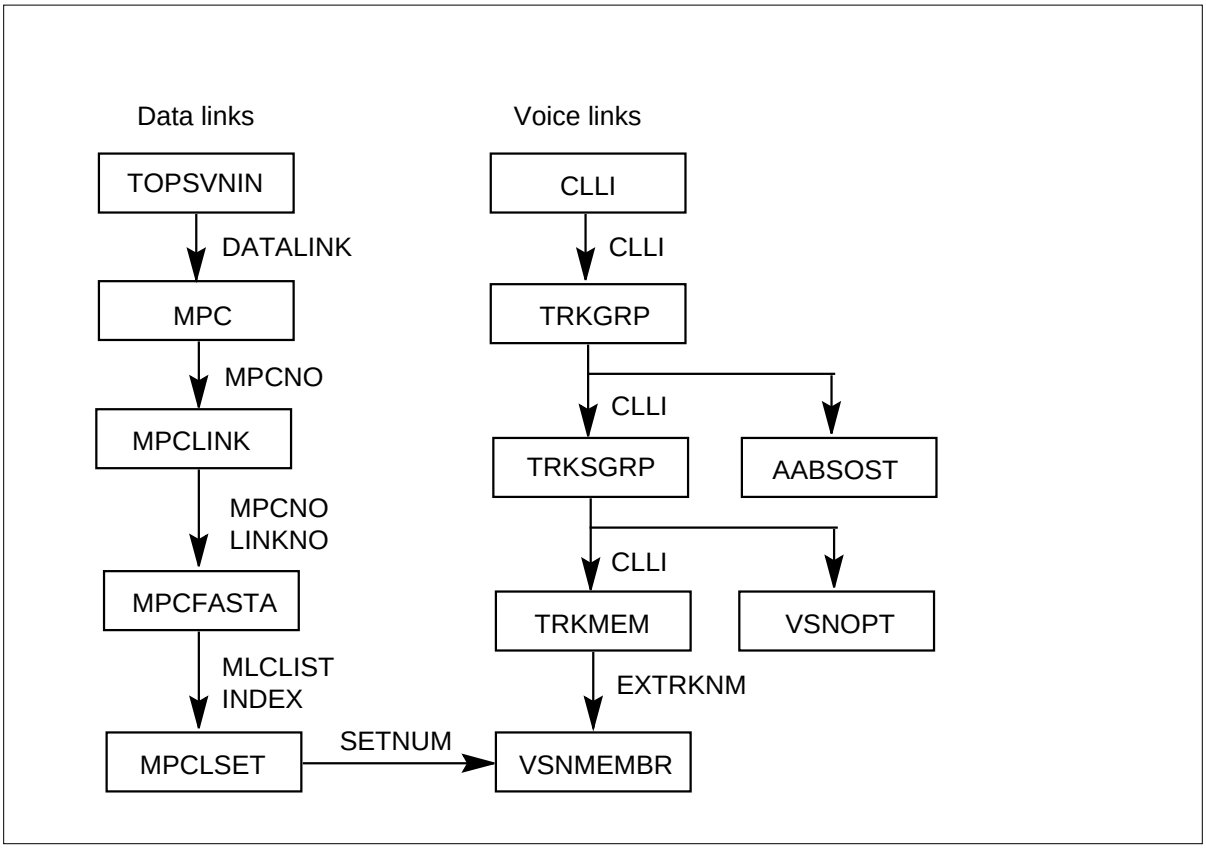

Limits

The following limits apply to Automated Alternate Billing Service:

- Only calls that arrive over TOPS trunks are eligible for AABS handling. Direct line-to-TOPS calls in a DMS-100/200 cannot connect directly to a VSN.
- The system can raise two or more alarm conditions of the same severity in the same or in different VSNs. When this condition occurs, the system only activates one alarm. This action occurs for alarms associated with Maintenance Notice messages. These alarms are VSN_CRIT_ALM, VSN_MAJ_ALM, VSN_MIN_ALM, and VSN_NO_ALM. If the alarm turns off manually, there is no indication that other alarms remain.
- You can only set the new fields in table TOPSVSNIN to the values currently indicated for AABS. The only valid voice link type is TRUNK. The only valid trunk group is VOICE_LINK_CLLI.

Automated Alternate Billing Service (continued)

Interactions

The following paragraph describes the interactions between Automated Alternate Billing Service and the Mechanized Calling Card Service (MCCS) and the Exchange Alternate Billing Service (EABS).

MCCS or EABS

The Mechanized Calling Card Service (MCCS) or the Exchange Alternate Billing Service (EABS) feature package is necessary. These features allow the performance of the calling card validation to a BVA or to a LIDB. These feature packages provide the sequence calling capability. The VSN does not provide this capability.

Activation/deactivation by the end user

The Automated Alternate Billing Service does not require activation or deactivation by the end user.

Billing

The Automated Message Accounting (AMA) records for AABS calls are like the records for equal calls that TOPS handles. When only the VSN handles the call, the OPERATOR NUMBER field of the AMA record has a nil value (3101). The OPERATOR WORK TIME field has a value of zero. This handling is the same as for MCCS calls.

When the operator receive a partially-handled AABS call, operator information is present in the AMA record. The office can record the billing number input method and the billing acceptance response method. If this condition occurs, the fields are used for AABS calls.

Station Message Detail Recording

The Automated Alternate Billing Service does not affect Station Message Detail Recording.

Datafilling office parameters

The Automated Alternate Billing Service does not affect office parameters.

Automated Alternate Billing Service (continued)

Datafill sequence

The tables that require datafill to implement Automated Alternate Billing Service appear in the following table. The tables appear in the correct entry order.

Datafill requirements for Automated Alternate Billing Service

Table	Purpose of table
TOPSVNIN	TOPS Virtual Node Inventory. This table contains protocol and data link information for external applications like automated alternate billing service (AABS). Enter the table with the name of each application. Enter the names of the protocol and data link the application uses. The DMS can index this table by application name. The DMS retrieves data link and protocol information.
MPC	Multiprotocol Controller.
MPCLINK	Multiprotocol Controller Link.
MPCFASTA	The MPC Fast Applications.
MPCLSET	The MPC Link-Set.
CLLI	Common Language Location Identifier. This table identifies the far end of each announcement, tone, trunk group, test trunk, national milliwatt test lines, and service circuit.
TRKGRP	Trunk Group. This table contains information about trunk groups.
TRKSGRP	Trunk Subgroup. This table contains information about each subgroup associated with a trunk group table TRKGRP defines.
TRKMEM	Trunk Member. This table lists the data for each trunk specified in the trunk group and subgroup tables.
VSNOPT	Voice Service Node Options. This table contains the parameters the Traffic Operator Position System (TOPS) Automated Alternate Billing Service (AABS) requires. The TOPS AABS uses the voice service mode (VSN).
VSNMEMBR	Voice Service Node. This table selects the voice connections to link a DMS switch with one or more voice service nodes (VSN). A DMS switch connects to VSNs through voice and data links. The trunk members that act as the voice links map to VSNs in table VSNMEMBR.
AABSOST	The ABBS Originating Station Treatment. This table specifies which TOPS trunk groups are qualified for AABS handling.

Automated Alternate Billing Service (continued)

Datafill requirements for Automated Alternate Billing Service

Table	Purpose of table
VSNALARM	Voice Service Node Alarms. This table contains the software alarms in use in the DMS switch. These alarms notify operating company personnel of any abnormal or maintenance conditions at the voice service node (VSN). The VSN sends the DMS a maintenance notice message to notify the DMS switch of these conditions.
SFWALARM	Software Alarm. The system adds the software alarms. The critical, major, and minor VSN alarm conditions are assigned in table VSNALARM.
OPRTRANS	Operator translations. Defines screening and routing for each NPA.
RTSNT	Return to service node type
RTSALGO	Return to service algorithm

Datafilling table TOPSVNIN

Table TOPSVNIN (TOPS Virtual Node Inventory) contains protocol and data link information for external applications like automated alternate billing service (AABS). Enter the table with the name of each application. Enter the names of the protocol and data link the application uses. The DMS can index this table by application name. The DMS retrieves data link and protocol information. Modification of this table allows specification of voice links.

The Automated Alternate Billing Service datafill for table TOPSVNIN appears in the following table. The fields that apply to Automated Alternate Billing Service appear in this table. Refer to the data design section of this document for a description of the other fields. This table provides protocol and datalink information for the AABS application.

Datafilling table TOPSVNIN

Field	Subfield or refinement	Entry	Explanation and action
KEY		1	Key in table.
APPLN		AABS, ADAS	The current APPLN field can have the values AABS and ADAS.
PROTOCOL		TABS	
DATALINK		MPC, MTS	The correct DATALINK field can have the values MPC and MTS.

Datafilling table TOPSVNIN

Field	Subfield or refinement	Entry	Explanation and action
VLTYPE		CHANNEL, TRUNK	A new selector VLTYPE can have the values TRUNK or CHANNEL.
VSN_TRUNK_CLLI		alphanumeric	A new field CLLI can have a trunk CLLI when the VLCLASS is TRUNK.

Datafill example for table TOPSVNIN

Sample datafill for table TOPSVNIN appears in the following table.

MAP example for table TOPSVNIN

```
KEY   APPLN     PROTOCOL   DATALINK   VLCLASS    CLLI
_____________________________________________________
 1     AABS        TABS        MPC       TRUNK    TOPSVSN
```

Expansion occurs on the ranges for this table. The above tuple is the only valid set of values that can be configured at this time. The CLLI must be the CLLI that VOICE_LINK_CLLI in table VSNOPT specified.

Datafilling table MPCLINK

In BCS29, table X25LINK changes to new table MPCLINK. The MPCLINK allows for the entry of protocols other than X.25 on MPC links. Refer to DDOC AF1767. Table MPCLINK contains protocol data for the VSN.

The Automated Alternate Billing Service datafill for table MPCLINK appears in the following table. The fields that apply to Automated Alternate Billing Service appear in this table. Refer to the data design section of this document for a description of the other fields. This table provides protocol and datalink information for the AABS application.

Datafilling table MPCLINK

Field	Subfield or refinement	Entry	Explanation and action
LINKNO		2 or 3	Field LINKNO must contain 2 or 3 for the VSN application.

Automated Alternate Billing Service (continued)

Datafilling table MPCFASTA

Table MPC Fast Application (MPCFASTA) assigns MPC logical links to an application. This assignment allows the MPC to transport data messages to the correct application. The MPCFASTA assigns the time between audits performed, duration of audits, and MLC the VSN application uses. The MLC combines MPC and Links and Channels. A link can idle for longer than the audit frequency. When this condition occurs, the MPC checks the link for sanity according to the standard MPC link auditing procedures the system sends the audit. The audit does not depend on the presence or absence of application level messages.

The Automated Alternate Billing Service datafill for table MPCFASTA appears in the following table. The fields that apply to Automated Alternate Billing Service appear in this table. Refer to the data design section of this document for a description of the other fields. This table provides protocol and datalink information for the AABS application.

Datafilling table MPCFASTA

Field	Subfield or refinement	Entry	Explanation and action
INDEX		TOPSVSN	The VSN must be an application that uses the MPC Fast Utility. The addition of a new value, TOPSVSN, to the range of field INDEX occurs.

Datafilling table MPCLSET

This table groups MPC Fast Application logical MLC links in link sets for selective link transfers. Data that corresponds must appear in table MPCFASTA before the assignment of link sets can occur. This condition ties MPC link set to a VSN number in table VSNMEMBR.

Datafilling table TRKGRP (TOPSVL)

The new trunk group type TOPSVL defines the trunk group for voice links to the TOPS VSN. Enter the trunk group as follows:

The default Automated Alternate Billing Service datafill for table TRKGRP (TOPSVL) appears in the following table. The fields that apply to Automated

Alternate Billing Service appear in this table. See the data schema section of this document for a description of the other fields.

Datafilling table TRKGRP (TOPSVL)

Field	Subfield or refinement	Entry	Explanation and action
GRPTYP		TOPSVL	Group type
TRAFSNO		0-127	Traffic separation number
NCCLS		NCRT	The OMs no circuit class
SELSEQ		MIDL	Selection sequence

Assign each voice link to VSNs in an office to the same TOPSVL type trunk group. Refer to table VSNMEMBR for trunk member assignment information.

Datafilling table VSNOPT

Table VSNOPT stores the office parameters the DMS system requires for VSN applications. The AABS is the only VSN application. Table VSNOPT contains default data at load build:

The default Automated Alternate Billing Service datafill for table VSNOPT appears in the following table. The fields that apply to Automated Alternate Billing Service appear in this table. See the data schema section of this document for a description of the other fields in this table.

Datafilling table VSNOPT

Field	Explanation and action
VOICE_LINK_CLLI	The VOICE_LINK_CLLI does not have a default value. Define the VSN voice link in tables CLLI and TRKGRP. Define field VOICE_LINK_CLLI. In BCS33, removal of the VOICE_LINK_CLLI occurs. The changes in table TOPSVNIN provide this function.

Datafill example for table VSNOPT

Sample datafill for table VSNOPT appears in the following example.

Automated Alternate Billing Service (continued)

MAP example for table VSNOPT

```
 PARM                                                    VALUE
------------------------------------------------------------
ONHOOK_RECOVERY_TIMER                                      5
OPR_SIMULATED_OUTPULSING                                   Y
OPR_0PLUS_3RD_DISPLAY                                  0+3RD
OPR_0PLUS_COL_DISPLAY                                  0+COL
OPR_0PLUS_3RDCON_DISPLAY                               3RDCON
OPR_0PLUS_CLDCON_DISPLAY                              CLDCON
SPL_SPL_BILLING_ALLOWED                                    N
VOICE_LINK_CLLI                                        AABSVL
```

Activation of these parameters is immediate. These parameters do not allocate data store.

Datafilling table VSNMEMBR

You must enter the following before you can enter data in table VSNMEMBR:

- CLLI in tables CLLI, TRKGRP, TRKSGRP, and VSNOPT
- CLLI and member number in table TRKMEM
- VSN link set number in table MPCLSET

Table VSNMEMBR assigns which trunk members route to which VSN. The member number corresponds to EXTRKNM in table TRKMEM for the CLLI assigned to trunk group type TOPSVL. The member number corresponds to TRUNK IDENT in VSN T1-Trunk ID Mapping table. The VSN numbers (VSNNUM) range from 0 to 15.

Note: The TOPSVSN is not a fixed CLLI.

The MULTIPLE VSN APPLICATIONS are more than one VSN for each DMS. The VSNMEM numbers must be different for every VSN associated with the same DMS.

The datafill for the Automated Alternate Billing Service for table VSNMEMBR appears in the following table. The fields that apply to

Automated Alternate Billing Service (continued)

Automated Alternate Billing Service appear in this table. See the data schema section of this document for a description of the other fields.

Datafilling table VSNMEMBR

Field	Subfield or refinement	Entry	Explanation and action
EXTMEMNUM		0-9999	Use the VSNNUM as the first digit of the VSNMEM number for accuracy.

Datafilling table AABSOST

Table AABSOST specifies the TOPS trunk groups that qualify for AABS handling. The selections are as follows:

- no AABS service - all 0+ calls route to an operator
- AABS service - specify originating station treatment of tone or tone plus announcement
- BVC lookup - send a query to the BVC over CCIS6 links or to the LIDB over SS7 links to determine a call with AABS service.

You can enter the CLLIs of TOPS trunk groups that AABS serves in table AABSOST. You can mark the CLLI of TOPS trunk group as NOSERV and NOAABS. A phased cutover to AABS service can occur. The action can occur when you mark incoming trunk groups as SERV or BVC as required.

Datafill example for table AABSOST

Sample datafill for table AABSOST appears in the following example.

MAP example for table AABSOST

```
CLLI   PUBLIC                          PRIVATE
--------------------------------------------
AABSVL  SERV  TONEANN      SERV      TONEANN
```

Datafilling table SFWALARM

The system adds software alarms in the load. The assignment of the critical, major, and minor VSN alarm conditions occurs in table VSNALARM.

You cannot add or delete tuples in table SFWALARM. You can change the datafill for each tuple.

The datafill for the Automated Alternate Billing Service for table SWALARM appears in the following table. The fields that apply to Automated Alternate

Automated Alternate Billing Service (continued)

Billing Service appear in this table. See the data design section of this document for a description of the other fields.

Datafilling table SFWALARM

Field	Subfield or refinement	Entry	Explanation and action
FUNCTION		alphanumeric	The addition of the following 6 alarms occurs: • VSN_CRIT_ALM • VSN_MAJ_ALM • VSN_MIN_ALM • VSN_NO_ALM • VSN_NO_LINKS • VSN_ONE_LINK
REPORT		Y	If you set this field to Y, the EXT logs continue the alarm text from table VSNALARM.

Datafill example for table SFWALARM

Sample datafill for table SFWALARM appears in the following table.

MAP example for table SFWALARM

```
FUNCTION     REPORT  ALM  SDFUNCT  ALMGRP ALMXFR     CONT
                                                    MARK
-----------------------------------------------------------
VSN_CRIT_ALM     Y    CR   SUCFLRPF     Y       N
                           PREFLRPF     N       N
                           SUCFLRCR     Y       N
                           PREFLRCR     N       N
                           EXPILDMS     N       N
                           MJXFR        N       Y
                           CRALMVIS     N       N
                           CRVISLOOP    N       N       $
VSN_MAJ_ALM      Y    MJ   SUCFLRMJ     Y       N
                           PREFLRMJ     N       N
                           EXPILDMS     N       N
                           MJXFR        N       Y
                           MJALMVIS     N       N
                           MJVISLOOP    N       N       $
VSN_MIN_ALM      Y    MN   MNALMVIS     N       N
                           MNVISLOOP    N       N       $
VSN_NO_ALM       Y    NA   NIL_SD       N       N       $
VSN_NO_LINKS     Y    MJ   SUCFLRMJ     Y       N
                           PREFLRMJ     N       N
                           EXPILDMS     N       N
                           MJXFR        N       Y
                           MJALMVIS     N       N
                           MJVISLOOP    N       N       $
VSN_ONE_LINK     Y    MN   MNALMVIS     N       N
                           MNVISLOOP    N       N       $
```

Datafilling table VSNALARM

Table VSNALARM maps the alarm code in the Maintenance Notice message from the VSN to the VSN alarms in table SFWALARM.

The ALMTEXT defines the text output with the EXT logs generated with the alarms. You can set REPORT=Y in table SFWALARM when this condition occurs,

Automated Alternate Billing Service (continued)

For NT TOPS VSN, enter the following alarm codes in table VSNALARM:

Alarm codes to enter in table VSNALARM

ALMCODE	SEVERITY	ALMTEXT
1	CR	FAULTY_PRU
2	CR	FAULTY_SRU_DEVICE
3	MJ	DISK_FULL
4	MJ	EXT_ALARM
5	MJ	INSERV_T1_FAILED
6	MN	BUSIED_T1_FAILED
7	CR	APCE_CAPACITY_LOST

Note 1: The default tuple is 255 MJ ALM_CODE_VSN.

Note 2: The operating company defines the SEVERITY and ALMTEXT fields. The ALMTEXT that appears represents each alarm code condition. Descriptions of these conditions appear in NTP 450-1301-511.

If table VSNALARM is not entered, every alarm code references the default.

The following are the fixed severity levels of alarms the VSN generates. The alarms output at the M4000 terminal. The operating company can want the alarms to have the same severity level at the DMS and VSN. When this condition occurs, enter table VSNALARM as follows:

Fixed severity alarm levels for table VSNALARM

ALMCODE	SEVERITY	ALMTEXT
1	MN	FAULTY_PRU
2	MN	FAULTY_SRU_DEVICE
3	CR	DISK_FULL
4	MN	EXT_ALARM

Note 1: The default tuple is 255 MJ ALM_CODE_VSN.

Note 2: The operating company defines the SEVERITY and ALMTEXT fields. The ALMTEXT that appears represents each alarm code condition. Descriptions of these conditions appear in NTP 450-1301-511.

Fixed severity alarm levels for table VSNALARM

ALMCODE	SEVERITY	ALMTEXT
5	MJ	INSERV_T1_FAILED
6	MN	BUSIED_T1_FAILED
7	MN	APCE_CAPACITY_LOST
Note 1: The default tuple is 255 MJ ALM_CODE_VSN.		
Note 2: The operating company defines the SEVERITY and ALMTEXT fields. The ALMTEXT that appears represents each alarm code condition. Descriptions of these conditions appear in NTP 450-1301-511.		

Datafilling table OPRTRANS

The datafill for the Automated Alternate Billing Service for table OPRTRANS appears in the following table. The fields that apply to Automated Alternate Billing Service appear in this table. Refer to the data design section of this document for a description of the other fields.

Datafilling table OPRTRANS

Field	Subfield or refinement	Entry	Explanation and action
KEY		SPLVFY	Bill-to-third authorization calls the VSN initiates route through the SPLVFY tuple. These calls verify that a third party accepts charges for the AABS call. Refer to DDOC AF1121: BCS27 TOPS AWT Enhancements, OSB00101.

Datafilling table RTSNT

The datafill for the Automated Alternate Billing Service for table RTSNT appears in the following table. The fields that apply to Automated Alternate Billing Service appear in this table. See the data schema section of this document for a description of the other fields.

Datafilling table RTSNT

Field	Subfield or refinement	Entry	Explanation and action
NODE_TYPE		TOPS_XAP_NODE	A definition of logical node type TOPS_XAP_NODE allows the VSN to send messages to the DMS.

Automated Alternate Billing Service (end)

Datafilling table RTSALGO

The datafill for the Automated Alternate Billing Service for table RTSALGO appears in the following table. The fields that apply to Automated Alternate Billing Service appear in this table. Refer to the data design section of this document for a description of the other fields.

Datafilling table RTSALGO

Field	Subfield or refinement	Entry	Explanation and action
RTSALGO_VECTOR		TOPS_XAP_NODE	The addition of TOPS_XAP_NODE to the return to service algorithm.

Tools for verifying translations

The Automated Alternate Billing Service does not use tools for verifying translations.

SERVORD

The Automated Alternate Billing Service does not use SERVORD.

Automated Room and Authorization Number

Ordering codes

Functional group ordering code: ABS00101

Functionality ordering code: not applicable

Release applicability

TOPS06 and later versions

Automated Room and Authorization Number was introduced in TOPS06.

Requirements

The Automated Room and Authorization Number feature requires the following functional groups:

- Operator Services Basic, OSB00001, and table TOPSFTR parameter TOPS_ON_OFF_SWITCH = Y
- Table TOPSFTR parameter AUTOMATED_ROOM_AND_AUTH_NUM_COLLECTION = Y

Description

The following feature provides this functionality:

Feature number	Feature name
AN0819	Automated Room and Authorization Number (ARAN)

This functionality allows the automated alternate billing service (AABS) to handle hotel calls that require room number or authorization number recording. The system can prompt institution traffic for an authorization number on 1+ dialed calls. Examples of institution traffic are law firms and hospitals.

Operation

Background

Table SPLDNID contains directory number information for hotel telephones and devices, coin telephones, and restricted telephones. The creation of tables DNSCRN, TOPSDB, and TDBCLASS for new DNs occured because some operating companies exhausted table SPLDNID. Checks occur for old DNs in table SPLDNID and for new DNs in tables DNSCRN, TOPSDB, and TDBCLASS.

Automated Room and Authorization Number (continued)

Before this functionality, all 1+ hotel calls went to a live operator for room number identification. The operator manually keys the room number that the calling party quoted. A record of the call printed on a HOBIC device.

The system sends the following to an operator for room number identification:

- 0+ calls from numbers in table SPLDNID with NoCharge set to Y
- numbers associated with a hotel device in table TDBCLASS with NoCharge set to Y

The system prints a record of the call printed on a HOBIC device. If NoCharge=N, room number identification or printouts are not present.

The NoCharge field selects printing of HOBIC records for calls not charged to the hotel, and billed in a different way. The hotel is normally not interested in charges not billed to the hotel.

If AABS was available, the system sends 0+ hotel calls to AABS for alternate billing. If the hotel required HOBIC records for these calls, the 0+ hotel calls require manual operator intervention to enter the room number for the HOBIC record.

The system does not support institution billing, except for hotels.

New functionality

Overview

The ARAN feature provides automatic operation through AABS for the following call types:

- 0+ hotel calls alternately billed that require a Hotel Billing Information Center (HOBIC) device to record the calls. This condition applies to 01+ dialed overseas calls.
- 1+ hotel calls, and 011+ dialed overseas calls.
- 1+ institution calls, and 011+ dialed overseas calls.

The DMS TOPS system transmits all call details (HOBIC records) to a teletypewriter (TTY). Call volumes determine if hotels have direct TTY facilities for Autoquote (AQ) service. For hotels without an AQ service, call details print on a Voicequote (VQ) TTY in the HOBIC. The HOBIC telephones the hotel and verbally quotes call details. This functionality does not change the format of any HOBIC record.

The system generates a HOBIC record for all 1+ institution calls. This condition can require the location of a TTY at the institution. This condition

Automated Room and Authorization Number (continued)

can require the HOBIC to telephone the institution and verbally quote call details. The log generation requires one of these two conditions. The room number field of the HOBIC record contains the authorization number. The ARAN does not change the format of any HOBIC record. Following is the sequence of events for different call types:

- For a 0+ hotel call, the system first prompts the hotel guest to enter a room or authorization number. The system prompts the hotel guest to select a billing method. The billing methods are collect, 3rd party, or calling card. The system verifies the billing method and if valid, the system floats the call. After the system floats the call, if the call is alternately billed, the TOPS system routes call details to a HOBIC device.
- For a 1+ hotel call, the system first prompts the hotel guest to enter a room or authorization number. The system floates the call. The TOPS system routes the call to a HOBIC device.
- For a 1+ institution call, the system prompts the institution caller to enter an authorization number. The system floats the call. The TOPS system routes the call to a HOBIC device.

The system generates a HOBIC record for all station paid (1+) calls. For alternately billed calls the system generates a HOBIC record if field NoCharge=Y in table SPLDNID. Alternately billed calls have 0+ and 1+ that fail during automated service.

The system checks the entered room or authorization number for the correct length (for example, 1-6 digits). The system checks the authorization number to make sure that all the digits are numbers. All ARAN calls must originate from a dual tone multifrequency (DTMF) telephone. An office that allows access to AABS must serve all ARAN calls.

The ARAN system connectivity appears in the following figure:

Automated Room and Authorization Number (continued)

ARAN system connectivity

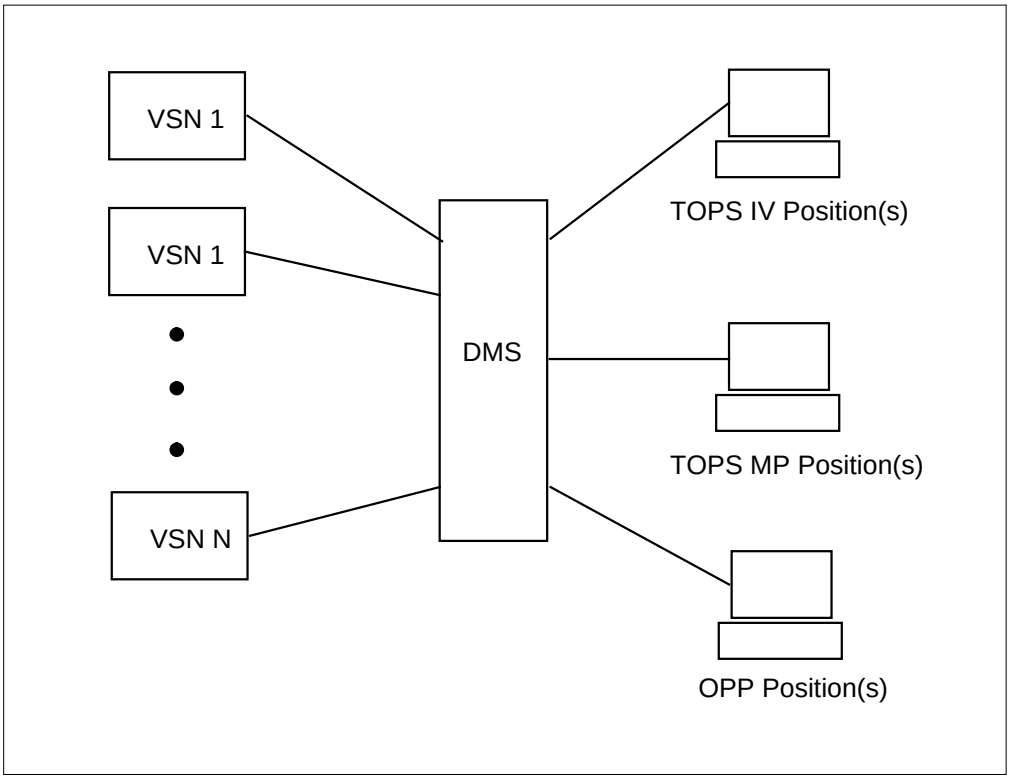

Datafill

Determining service for hotel calls with tables DNSCRN, TOPSDB and TDBCLASS

The following sequence of events determines ARAN service for a hotel call through datafill in tables DNSCRN, TOPSDB and TDBCLASS:

1. The system marks an incoming call with a calling service class of hotel.
2. The NPA-NXX-XXXX of the calling number references table DNSCRN for the correct index into table TOPSDB. If TOPSDB does not contain a match for the calling NPA-NXX-XXXX, the call does not receive ARAN service. Note that all TOPS calls index table DNSCRN. This condition applies to 0- calls.
3. The value from DNSCRN indexes table TOPSDB. Table TOPSDB returns another index, TDBCLIDX, in table TDBCLASS.
4. The TDBCLIDX indexes TDBCLASS. If the device selector is AQHTL, VQHTL, DUAQHTL, AQTAC, or DUAQTAC, the DMS switch checks the ARAN field. If the value of the ARAN field is Y, the call continues

with ARAN checks. If the value is N, the call does not receive ARAN service. The system routes the call to an operator.

5. If field ARANVAL = INSTN, the call does not receive automated service and the system routes the call to a live operator

   a. The ARAN_STATUS can be set to NONE or INSTN. If this event occurs the system routes the call to the operator as a hotel call that is not ARAN.

   b. If ARAN_STATUS = HOTEL or BOTH, the system routes the call to the operator as an ARAN hotel call.

   For both conditions, the system generates a log to indicate a mismatch between the station class (hotel) and table TDBCLASS (institution). The system also routes 0- calls immediately to a manual operator after the index to TDBCLASS occurs.

6. The system checks parameter ARAN_STATUS in table TOPSPARM. If the value is HOTEL or BOTH, the call continues with automation checks. If ARAN_STATUS = INSTN or NONE, the system routes the call to a live operator as a non-ARAN hotel call.

7. The DMS switch indexes table AABSOST with the CLLI of the originating trunk. The CLLI is not always entered for automated service or the call can be from a dial pulse (DP) phone. If one of these events occurs the system routes the call to the operator as an ARAN hotel call.

8. The DMS switch checks for ARAN compatibility with the voice service node (VSN) protocol version in the VSN. If the DMS is not ARAN compatible, the system routes the call to a live operator as an ARAN hotel call. The system generates a log. For other conditions, the system routes the call to the VSN for automated ARAN service.

The table flow appears in the following table.

Automated Room and Authorization Number (continued)

Hotel call flow through tables DNSCRN, TOPSDB, and TDBCLASS

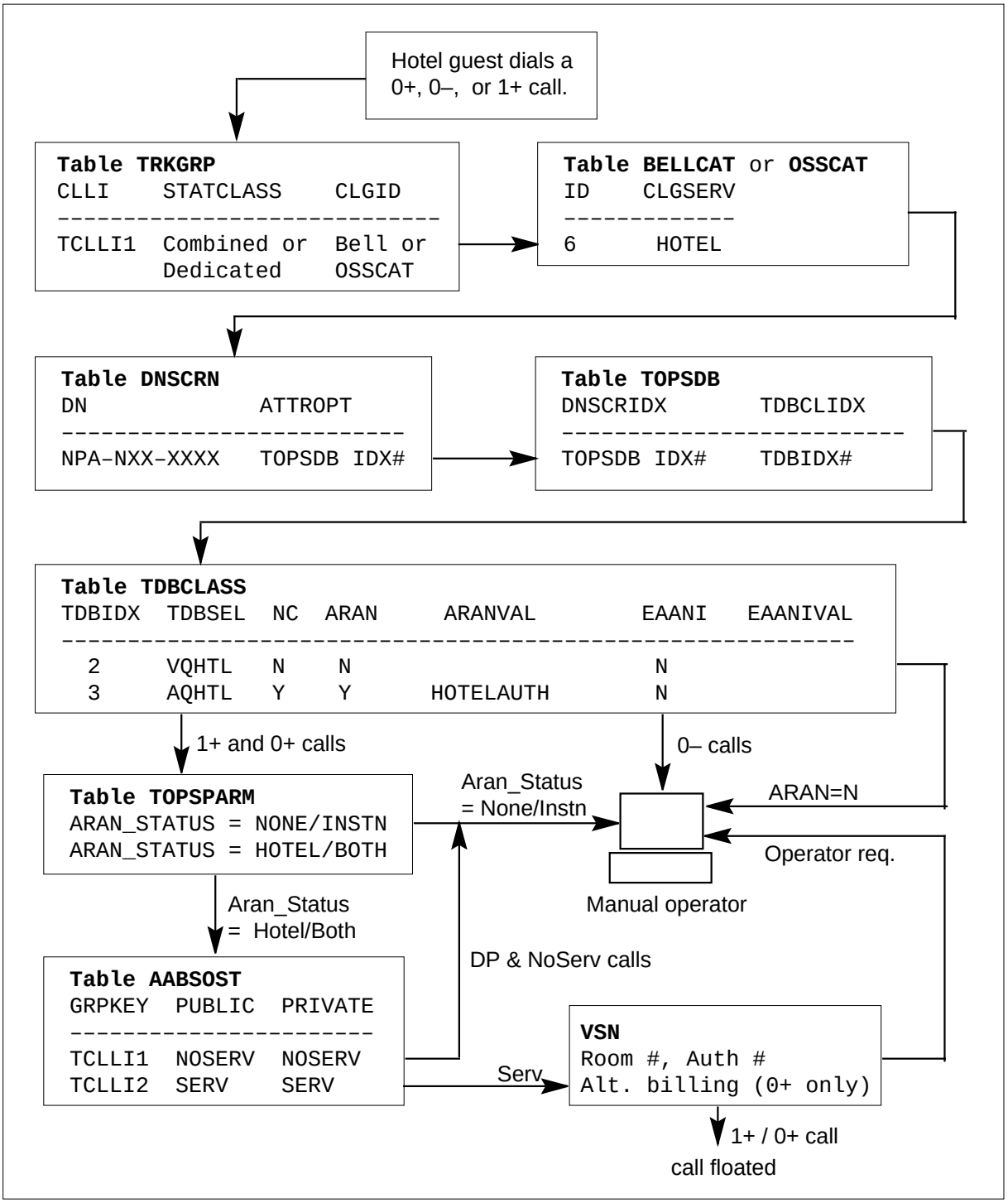

Automated Room and Authorization Number (continued)

Determining service for hotel calls with table SPLDNID

The following sequence of events determines ARAN service for a hotel call through datafill in table SPLDNID:

1. The system marks an incoming call with a calling service class of hotel.
2. The NPA-NXX-XXXX references table SPLDNID. The call does not receive hotel call service if SPLDNID does not contain a match for the calling NPA-NXX-XXXX. The call does not receive hotel call service if the device selector is not AQHTL, VQHTL, or DUAQHTL.
3. The system checks parameter ARAN_STATUS in table TOPSPARM. If the value is HOTEL or BOTH, the call continues with automation checks. If ARAN_STATUS = INSTN or NONE, the system routes the call to an operator as a hotel call that is not ARAN.
4. The DMS switch indexes table AABSOS with the CLLI of the originating trunk. The CLLI is not always entered for automated service or the call can be from a dial pulse telephone. If this event occurs the system routes the call to the operator as an ARAN hotel call.
5. The DMS switch checks for ARAN compatibility with the VSN protocol version in the VSN. If the VSN protocol version is not compatible, the system routes the call to an operator as an ARAN hotel call. The system generates a log. For other conditions, the system routes the call to the VSN for automated ARAN service.

Table flow appears in the following table.

Automated Room and Authorization Number (continued)

Hotel call flow through table SPLDNID

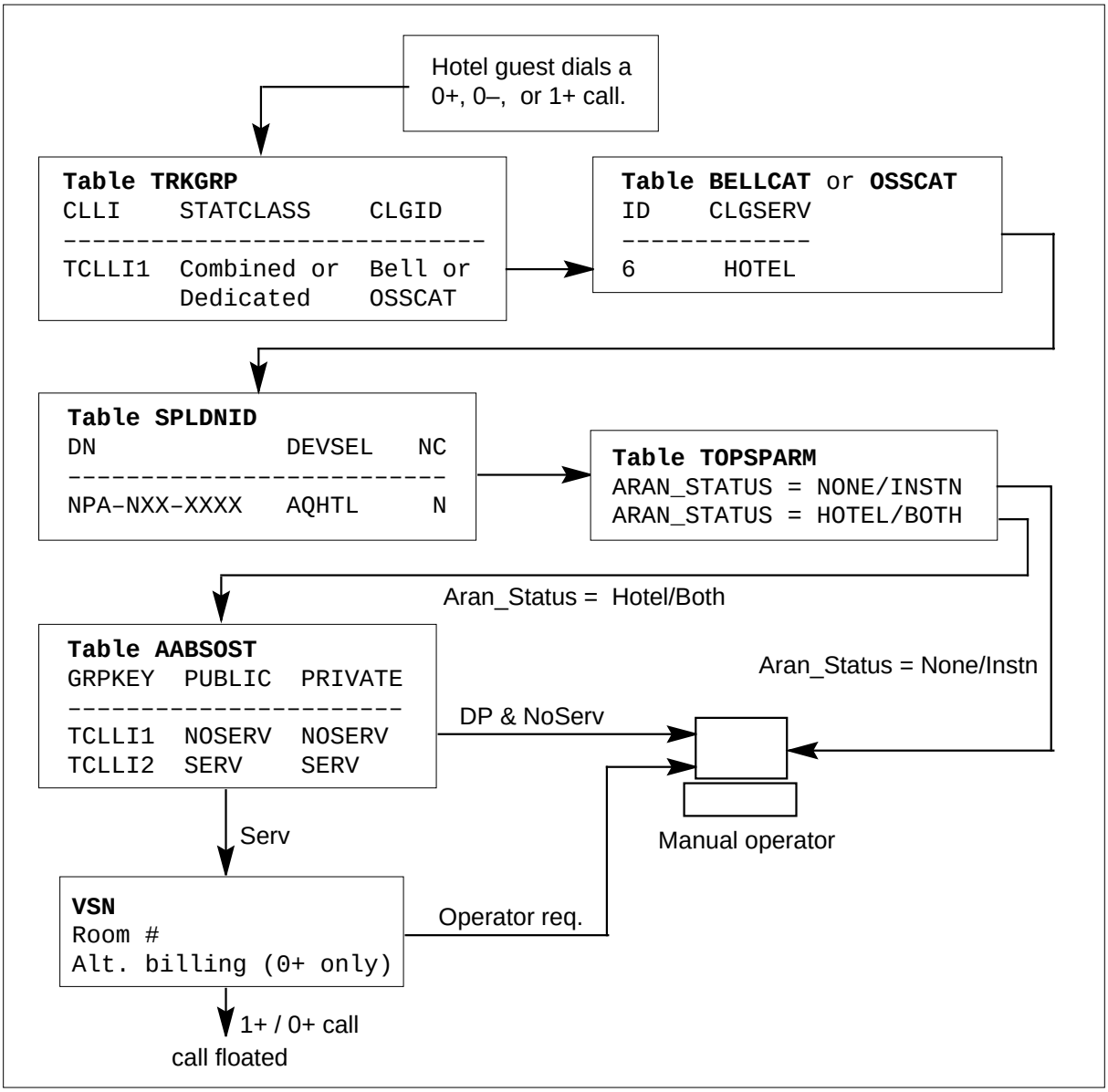

Determining service for institution calls

The following is the sequence of events that determine ARAN service for an institution call:

1. The system marks an incoming call with a calling service class of station.
2. The NPA-NXX-XXXX references table DNSCRN for the correct index to table TOPSDB. If DNSCRN does not contain a match for the

Automated Room and Authorization Number (continued)

NPA-NXX-XXXX, the call does not receive ARAN service. Note that all TOPS calls index table DNSCRN. This condition applies to 0- calls.

3. The value from DNSCRN indexes table TOPSDB. Table TOPSDB returns an index in table TDBCLASS, field TDBCLIDX.
4. The TDBCLIDX indexes TDBCLASS. If the device selector is AQHTL, VQHTL, DUAQHTL, AQTAC, or DUAQTAC, the DMS switch checks the ARAN field. If the value of ARAN field is Y, the call continues with ARAN checks. If the value is N, the system does not mark the call as an ARAN call.
5. If field ARANVAL = HOTELRM or HOTELAUTH, the call does not receive automated service. The system sends the call to a live operator as an institution call if ARAN_STATUS = INSTN or BOTH. For other conditions, the system floats the call from the TOPS system. The system generates a log to indicate a mismatch between the station class (station) and table TDBCLASS (hotel). The system also routes 0- calls to a manual operator after the index to table TDBCLASS occurs.
6. The system checks parameter ARAN_STATUS in table TOPSPARM. If the value is INSTN or BOTH, the call continues with checks for automation service. If ARAN_STATUS = HOTEL or NONE, the system cannot mark the call as an institution call. The system floats the call from the TOPS system if the call was direct dialed or the call receives either live or automated service as a non-institution call.
7. The DMS switch indexes table AABSOST with the CLLI of the originating trunk. The CLLI is not always entered for automated service or the call can be from a dial pulse telephone. If one of these conditions occurs the system does not provide automated service. The system routes the call to an operator as an institution call. For other conditions, the system routes the call to the VSN for automated service.
8. The DMS switch checks for ARAN compatibility with the VSN protocol version in the VSN. If the VSN protocol is not compatible, the system routes the call to an operator as an institution call. The system generates a log. For other conditions, the system routes the call to the VSN for automated ARAN service.

Table flow appears in the following table.

Automated Room and Authorization Number (continued)

Institution call flow

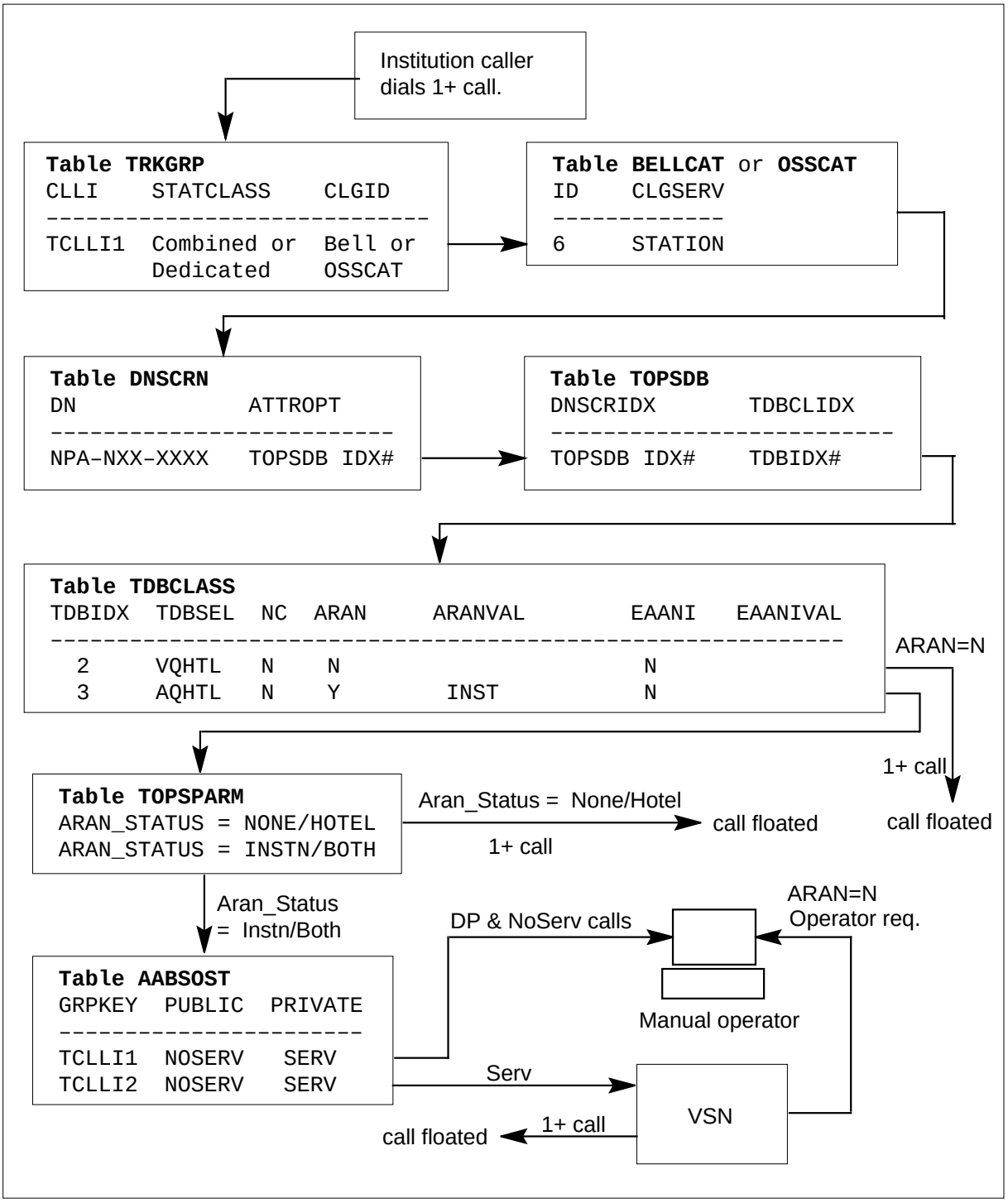

Automated Room and Authorization Number (continued)

HOBIC records

The ARAN feature does not change the format of HOBIC records. The system records the room number or authorization number in the room number (RN) field of the HOBIC record. The HOBIC record does not indicate calls that ARAN handled. Refer to the Hotel System Description in section OSB00001 for more information on HOBIC records.

The system treats institution calls as station calls. This condition does not apply when the system prints a HOBIC record. The billing of the call and the datafill of the HOBIC device in table TDBCLASS determines this condition. The No Charge field entered against the HOBIC device can be Y. If this event occurs the system prints records for station paid calls and the system prints records for alternately billed calls.

Logs

The system generates the following logs:

- VSN119 - The system generates this log when the DMS switch rejects a call from automated ARAN service. The switch rejects a call because the protocol loaded on the VSN does not support ARAN.
- TOPS140 - The system generates this log when the calling service class of a call does not match datafill. This datafill is for the calling number in table TDBCLASS. Examples of service classes of a call are hotel or station. The following two methods generate a TOPS140 log:
  - — if the calling service class was hotel, and the calling number was datafill is INSTN in table TDBCLASS
  - — if the calling service class was station and the datafill is HOTELRM or HOTELAUTH in table TDBCLASS
- VSN120 - The system generates this log when the TOPS system cannot calculate the ratestep for an ARAN call. This condition applies to calls that received completely automated service. When this condition occurs, the TOPS system cannot post charges for the call on the HOBIC record associated with the call.
- VSN110 - The ARAN modifies this log to notify operating company personnel of an AABS protocol violation. This problem occurs when AABS protocol fields that ARAN adds are missing from the respective messages.

Software optionality control

The ARAN is an optional functionality. Software Optionality Control (SOC) controls ARAN. The SOC for this functionality is separate from other office parameters and datafill. The SOC does not affect the addition of datafill for this functionality. When the delivery of this functionality occurs, the default

Automated Room and Authorization Number (continued)

SOC state is IDLE. The SOC state must be set to ON before the system can process any calls as ARAN calls.

Translations table flow

Descriptions of the Automated Room and Authorization Number translations tables appear in the following list:

- Table TRKGRP - Hotel call arrives on TOPS trunk. This table does not change.
- Table BELLCAT - Indicates hotel service. This table does not change.
- Table SPLDNID - DN associated information. This table does not change.
- Table DNSCRN - DN associated index to table TOPSDB. This table does not change.
- Table TOPSDB - Index to table TDBCLASS. This table does not change.
- Table TDBCLASS - Information on special and restricted DNs. This table changes.
- Table TOPSPARM - Enables ARAN. This table changes.
- Table AABSOST - Indicates services available for each trunk. This table does not change.

The Automated Room and Authorization Number translation process appears in the following flowchart.

Automated Room and Authorization Number (continued)

Table flow for Automated Room and Authorization Number

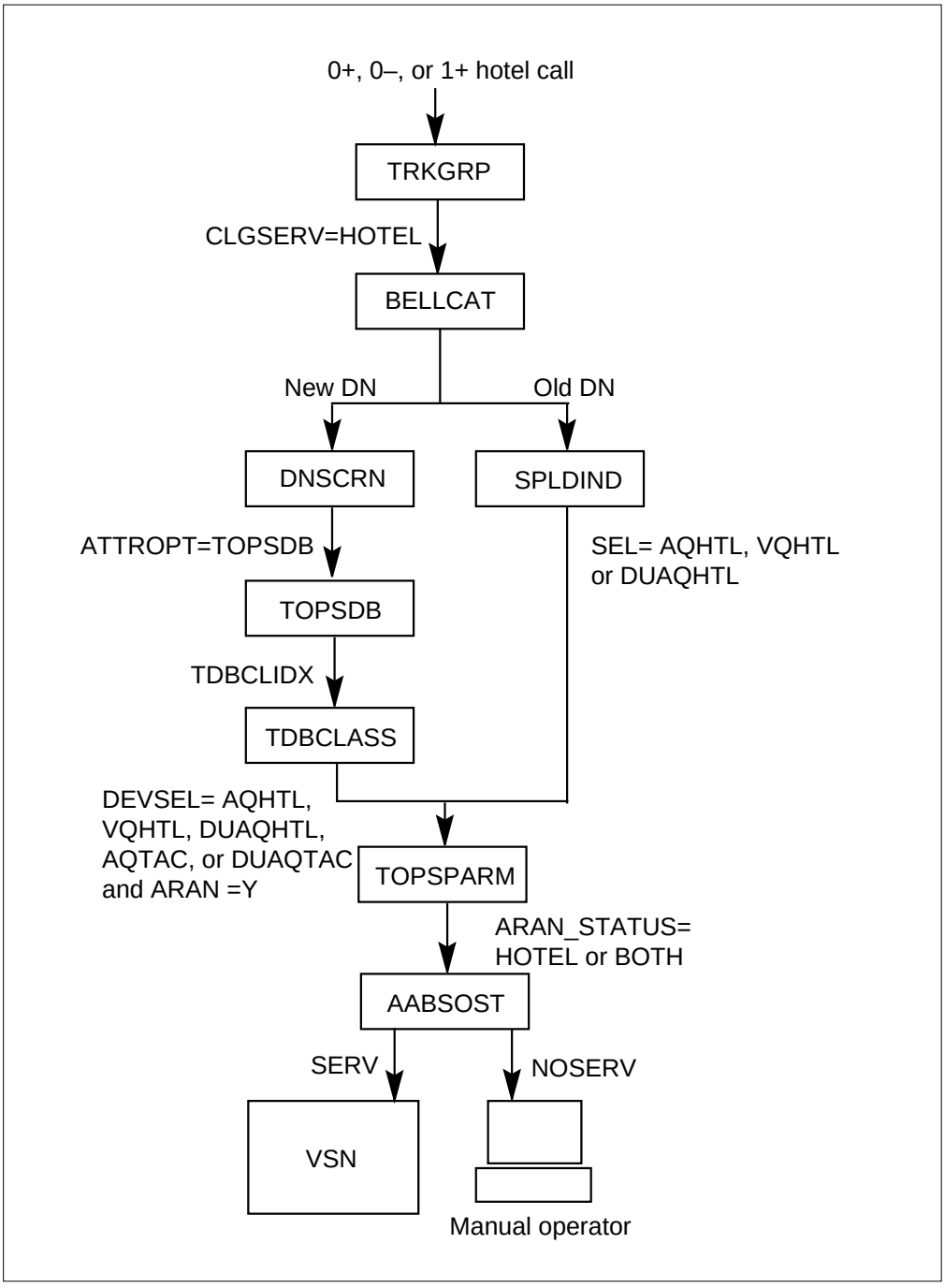

Automated Room and Authorization Number (continued)

The datafill for the flowchart appears in the following table.

Datafill example for Automated Room and Authorization Number

Datafill table	Example data
TRKGRP	TBELLIC1 TOPS 0 TLD NCRT IC MIDL 619 PTOP NLCA NSCR Y SP COMBINED N Y 0 0000 NONE BELL 16 10 10 Y N OFFHK N N
BELLCAT	6 ONI HOTEL T OFRT 74
SPLDNID	628794321 AQHTL N
DNSCRN	628794321 TOPSDB 8
TOPSDB	8 2
TDBCLASS	2 VQHTL N N N
TOPSPARM	ARAN_STATUS HOTEL
AABSOST	TBELLIC1 NOSERV NOSERV

Limits

The following limits apply to Automated Room and Authorization Number:

- The DMS switch must have a successful ANI spill to provide ARAN service.
- Institution traffic must be signalled as STATION and hotel traffic must be signaled as HOTEL.
- Automatic operation does not apply to known DP subscribers. The VSN does not support automatic operation.
- Table AABSOST for public (hotel) and private (institution) must contain originating trunk groups as SERV. This condition allows the trunk groups to receive automated service.
- Only subscribers with an entry in TDBCLASS can receive service for authorization number collection.
- Datafill for hotel room number service can be in tables TDBCLASS or SPLDNID. The TDBCLASS is best because new development does not occur on table SPLDNID.
- The system checks room and authorization numbers for numeric values (for example, 0-9) and correct length (for example, 1-6 digits).
- The system supports only trunk group type TOPS.

Automated Room and Authorization Number (continued)

- The system supports only 0+ and 1+ calls.
- Only calls that are not coin calls can be of the institution calls class.

Interactions

The following paragraphs describe the interactions between Automated Room and Authorization Number and other functionalities.

The VSN must contain a load compatible with ARAN before activation of this functionality occurs. This condition requires an upgrade to the VSN.

Offices with TPCs must contain function TPC00001, TOPS MP HMI Enhancements (feature AN0796), before activation of this functionality occurs. This condition requires an upgrade to the TPCs. This condition applies to offices with TPCs that are both integrated and standalone.

The OPP positions must contain a load compatible with ARAN before activation of this feature occurs. This condition requires an upgrade to the OPP.

The assumed value for the No Charge field of an AQTAC device is N. Numbers entered against an AQTAC device only leave records when the class charge is station paid.

Calls dialed with an ANI ID digit for hotel, and entered as institution, do not leave records on AQTAC devices. This condition applies when the class charge is station paid.

Activation/deactivation by the end user

Automated Room and Authorization Number does not require activation or deactivation by the end user.

Billing

The ARAN supports all surcharge and tariff classes that AABS supported. Examples of surcharge and tariff classes are calling card and collect.

Automated ARAN calls mark the operator number field of the AMA record for automated operator.

Institution calls use the TOPS real time rating system to get time and charges.

Only EBAF Phase II supports ARAN.

Automated Room and Authorization Number (continued)

Calls that use real time rating and EBAF AMA generate EBAF module code 60 to describe real time rating charges. The ARAN hotel calls does not affect information in module code 60. Institution calls affect the Charge Indicator (table number 22) field of this module. All institution calls have a Charge Indicator value of 5 (Other). The range of values for the Charge Indicator field are:

- 0 - Hotel/Motel
- 1 - Coin difference indicator (walk away)
- 2 - Coin
- 3 - Time and charges
- 4 - Part charge
- 5 - Other

An example AMA record appears in the following example:

AMA record example

```
MODULE CODE:060C  CHARGE INDICATOR:5C
AMOUNT OF CHARGE: 00025C
WALK OR DEPOSIT AMOUNT: 00000C  COIN CREDIT: FF
```

Station Message Detail Recording

Automated Room and Authorization Number does not affect Station Message Detail Recording.

Datafilling office parameters

Automated Room and Authorization Number does not affect office parameters.

Automated Room and Authorization Number (continued)

Datafill sequence

Tables that require datafill to implement Automated Room and Authorization Number appear in the following table. The tables appear in the correct entry order.

Datafill requirements for Automated Room and Authorization Number

Table	Purpose of table
TDBCLASS	TOPS Database class. Special and restricted DN information
SPLDNID	Special Directory Number Identification. DN information
TOPSPARM	TOPS Parameters. Enable ARAN

Datafilling table TDBCLASS

The datafill for Automated Room and Authorization Number for table TDBCLASS appears in the following table. The fields that apply directly to Automated Room and Authorization Number appear. See the Data Schema section of this manual for a description of the other fields.

Datafilling table TDBCLASS

Field	Subfield or refinement	Entry	Explanation and action
NC		Y or N	No charge. This field does not have changes. This field indicates if the system produces a HOBIC record on calls not sent paid. If NC=Y, generate HOBIC records for 0+ hotel calls and all 1+ ARAN calls. Note: The system does not prompt 0+ calls with NC set to N for room or authorization number.
SEL			Selector. This field does not have changes. Entry of values AQTAC and DUAQTAC can occur if field ARAN=N (no automation, thus prompts for a room number), or if ARAN=Y and ARANVAL= INSTN.

Automated Room and Authorization Number (continued)

Datafilling table TDBCLASS

Field	Subfield or refinement	Entry	Explanation and action
ARAN		N or Y	Automated Room and Authorization Number. This field is a new field that allows (Y) or disables (N) ARAN. If ARAN=N, the call goes to an operator for room number collection. If ARAN=N, field ARANVAL does not appear.
ARANVAL		HOTELRM, HOTELAUTH, or INSTN	ARAN value. This field only appears if field ARAN=Y. This field identifies the ARAN subscriber: • HOTELRM - Hotel subscriber, automated room number collection. • HOTELAUTH - Hotel subscriber, automated authorized room number collection. • INSTN - Institution. Only calls that are not coin calls can be of the institution calls class.

Datafill example for table TDBCLASS

Sample datafill for table TDBCLASS appears in the following example.

MAP example for table TDBCLASS

```
IDX   TDBCLSEL   NC  ARAN    ARANVAL  EAANI   EAANIVAL
-------------------------------------------------------
0    NOSPLDNID                          N
2        VQHTL    N     Y    HOTELRM     N
3        AQHTL    Y     Y  HOTELAUTH     N
4      AQTAC 3    Y           INSTN     N
5    DUAQTAC 1          N               N
```

The preceding datafill indicates the following:

- IDX: 0 - this tuple is the default tuple
- IDX: 2
  - — HOBIC recording by VQHTL
  - — the system did not generate a HOBIC record and did not collect room number for alternately billed calls. These calls go directly to AABS.
  - — automation, if ARAN_STATUS is HOTEL or BOTH
  - — hotel subscriber, room number collection

Automated Room and Authorization Number (continued)

- TDBIDX: 3
  - — HOBIC recording by AQHTL
  - — HOBIC record the system generates for alternately billed calls
  - — automation, if ARAN_STATUS is HOTEL or BOTH
  - — hotel subscriber, authorization number collection
- TDBIDX: 4
  - — HOBIC recording by AQTAC (institution only device)
  - — automation, if ARAN_STATUS is INSTN or BOTH
  - — institution subscriber - Always collect authorization number.
- TDBIDX: 5
  - — HOBIC recording by AQTAC
  - — no ARAN functionality
  - — Note, ARAN generates HOBIC records for all 1+ hotel and 1+ institution calls.

Datafilling table SPLDNID

The datafill for Automated Room and Authorization Number for table SPLDNID appears in the following table. The fields that apply directly to

Automated Room and Authorization Number (continued)

Automated Room and Authorization Number appear. See the Data Schema section of this manual for a description of the other fields.

Datafill ing table SPLDNID

Field	Subfield or refinement	Entry	Explanation and action
DEVSEL		AQHTL, VQHTL, or DUAQHTL	Device select. This table does not change. Field DEVSEL must be set to AQHTL, VQHTL, or DUAQHTL for routing to ARAN for room number prompting only. Parameter ARAN_STATUS must be set HOTEL or BOTH for ARAN service. ARAN_STATUS can be INSTN or NONE. If this event occurs the system does not perform automated room number collection for numbers entered with hotel devices. Entry of these numbers occurs in table SPLDNID. Hotel devices can be AQHTL, VQHTL, DUAQHTL. The system sends the call as call that is not ARAN to an operator for manual room number collection. Tuples entered as AQTAC or DUAQTAC do not receive ARAN service.
NC		Y or N	No charge. This field does not change. The system generates HOBIC records for 1+ hotel calls. The system does not prompt 0+ calls with NC set to N for a room number. The system routes these calls to AABS.

Datafill example for table SPLDNID

Sample datafill for table SPLDNID appears in the following table.

MAP example for table SPLDNID

```
SPLDN          SPLSEL
-------------------------------------------------------
628794321      AQHTL  13  Y
```

Datafilling table TOPSPARM

The datafill for Automated Room and Authorization Number for table TOPSPARM appears in the following table. Only the fields that apply directly

to Automated Room and Authorization Number appear. Refer to the Data Schema section for a description of the other fields.

Datafilling table TOPSPARM

Parameter	Explanation and action
ARAN_STATUS	This parameter activates/deactivates ARAN office wide. Acceptable values are: • NONE - ARAN deactivated for hotel and institution subscribers. The system does not route hotel and institution calls to ARAN. The system sends hotel calls that require room number collection to an operator for manual room number collection. Institution calls tandem through the TOPS office. • BOTH - ARAN activated for hotel and institution subscribers. The system routes hotel calls that require room number collection and institution calls to ARAN. • HOTEL - ARAN activated for hotel subscribers. The system only routes hotel calls that require room number collection to ARAN. Institution calls tandem through the TOPS office. • INSTN - ARAN activated for institution subscribers only. The system only routes institution calls to ARAN. The system sends hotel calls that require room number collection to an operator for manual room number collection. There is no default value. Note: If ARAN_STATUS is active for hotel subscribers, ARAN_STATUS is active for numbers entered in tables SPLDNID and TDBCLASS.

Datafill example for table TOPSPARM

Sample datafill for table TOPSPARM appears in the following example.

MAP example for table TOPSPARM

```
PARMNAME                                PARMVAL
--------------------------------------------------------
ARAN_STATUS                             BOTH
```

Tools for verifying translations

Automated Room and Authorization Number does not use tools for verifying translations.

Automated Room and Authorization Number (end)

SERVORD

Automated Room and Authorization Number does not use SERVORD.

Calling Card Denial Reasons

Ordering codes

Functional group ordering code: ABS00101

Functionality ordering code: not applicable

Release applicability

TOPS06 and later versions

Calling Card Denial Reasons was introduced in TOPS06.

Requirements

To operate, Calling Card Denial Reasons requires the following functional group:

- Operator Services Basic, OSB00101, and table TOPSFTR parameter TOPS_ON_OFF_SWITCH = Y
- Table TOPSFTR parameter CALLING_CARD_DENIAL_REASON = Y

Description

The following feature provides this functionality:

Feature number	Feature name
AN0820	Calling Card Denial Reasons

This functionality provides operator display reasons for calling card refusal. A calling card refusal occurs when the system denies the card number or the personal identification number (PIN) at the database. This functionality provides new automated alternate billing service (AABS) announcements to the subscriber for card refusal.

Operation

This feature supports International Organization for Standardization (ISO) and domestic cards. Refer to functionality ABS00101, TOPS Acceptance of Commercial Credit Cards, for information on these cards.

The new displays are for TOPS IV positions. New parameters in table TOPSPARM control these displays.

Software optionality control

This functionality is an optional functionality. Software Optionality Control (SOC) controls this functionality. The SOC for this functionality is separate

Calling Card Denial Reasons (continued)

from other office parameters and datafill. The SOC state does not affect the addition of datafill for this feature. When delivery of this feature occurs, the default SOC state is IDLE. The SOC state must be set to ON for this functionality to operate. The SOC deactivates this functionality.

Changes to table TOPSPARM are present if this functionality is set to IDLE or ON. The data schema changes are not optional.

Screen displays and announcements appear and play when activation of this functionality occurs (ON state).

Translations table flow

This feature does not have a translations table flow.

Limits

The following limits apply to Calling Card Denial Reasons:

- The voice service node (VSN) requires an upgrade to VSN03 to provide new AABS announcements before feature activation.
- The OPP position software requires an upgrade ISR02 to handle the changes to the Open Position Protocol (OPP) that this feature requires.
- The TOPS position controller (TPC) requires an upgrade to TPC03 before functionality activation.
- The audit frequency (AUDITFRQ) for the VSN links must be set to a value other than 0 in table MPCFASTA. This condition allows the exchange of audit messages between the CM and the VSN. The audit messages contain the AABS protocol version. This exchange causes the use of the correct protocol version.
- Bellcore is the only type of automatic calling card service (ACCS) this functionality supports. The BC_ACCS is the only value this functionality supports for the TYPE_OF_ACCS parameter in table OFCENG.

Interactions

Calling Card Denial Reasons does not have functionality interactions.

Activation/deactivation by the end user

Calling Card Denial Reasons does not require activation or deactivation by the end user.

Billing

Calling Card Denial Reasons does not affect billing.

Station Message Detail Recording

Calling Card Denial Reasons does not affect Station Message Detail Recording.

Datafilling office parameters

Calling Card Denial Reasons does not affect office parameters.

Datafill sequence

Tables that require datafill to implement Calling Card Denial Reasons appear in the following table. The tables appear in the correct entry order.

Datafill tables Calling Card Denial Reasons

Table	Purpose of table
TOPSPARM	TOPS Parameters. Define denial display reasons.

Datafilling table TOPSPARM

The datafill for Calling Card Denial Reasons for table TOPSPARM appears in the following table. The fields that apply directly to Calling Card Denial Reasons appear. See the Data Schema section of this manual for a description of the other fields.

Datafilling table TOPSPARM

Parameter	Explanation and action
THRESHOLD_EXCEEDED_SCREEN_DISPLAY	This TOPS IV display is for threshold exceeded because of fraud or potential fraud. The value is a string of a maximum of six characters. The default is THR_EX.

Datafill example for table TOPSPARM

Sample datafill for table TOPSPARM appears in the following example.

MAP example for table TOPSPARM

```
PARMNAME                                    PARMVAL
_____________________________________________________
THRESHOLD_EXCEEDED_SCREEN_DISPLAY           SV_RES
```

Calling Card Denial Reasons (end)

Tools for verifying translations

Calling Card Denial Reasons does not use tools for verifying translations.

SERVORD

Calling Card Denial Reasons does not use SERVORD.

Disallowed Card Issuer Blocking

Ordering codes

Functional group ordering code: ABS00101

Functionality ordering code: not applicable

Release applicability

TOPS09 and up

Disallowed Card Issuer Blocking was introduced in TOPS09.

Prerequisites

To operate, Disallowed Card Issuer Blocking has the following prerequisites:

- BAS Generic, BAS00001
- Operator Services Basic, OSB00101, and table TOPSFTR parameter TOPS_ON_OFF_SWITCH = Y
- Table TOPSFTR parameter DISALLOWED_CARD_ISSUER = Y

Description

Disallowed Card Issuer Blocking is provided by the following features:

Features in functionality

Feature number	Feature name
AN1843	Disallowed Card Issuer Blocking

Disallowed Card Issuer Blocking (DCIB) allows the Local Exchange Carrier (LEC) to block subscribers from using Card Issuer Identifier (CIID) and International Telegraph and Telephone Consultative Committee (CCITT) calling cards issued by the InterLATA Carriers (IC) if the LEC and IC do not have a mutual honoring agreement.

Similar functionality for InterLATA calls is provided in functionality “Exchange Alternate Billing Service", ABS00101, (PRSDOC BK08865) except that it's on a carrier basis rather than a calling card basis.

Operation

Background

Before this functionality, a subscriber's call was processed by an LEC and billed to a calling card issued by an IC. The only requirement was that the credit card be a valid format and not present in table HOTLIST. If the card

Disallowed Card Issuer Blocking (continued)

passed both checks, then a credit card query was launched to the LIDB. Following is a logic flow diagram:

Disallowed Card Issuer Blocking (continued)

Logic flow before DCIB

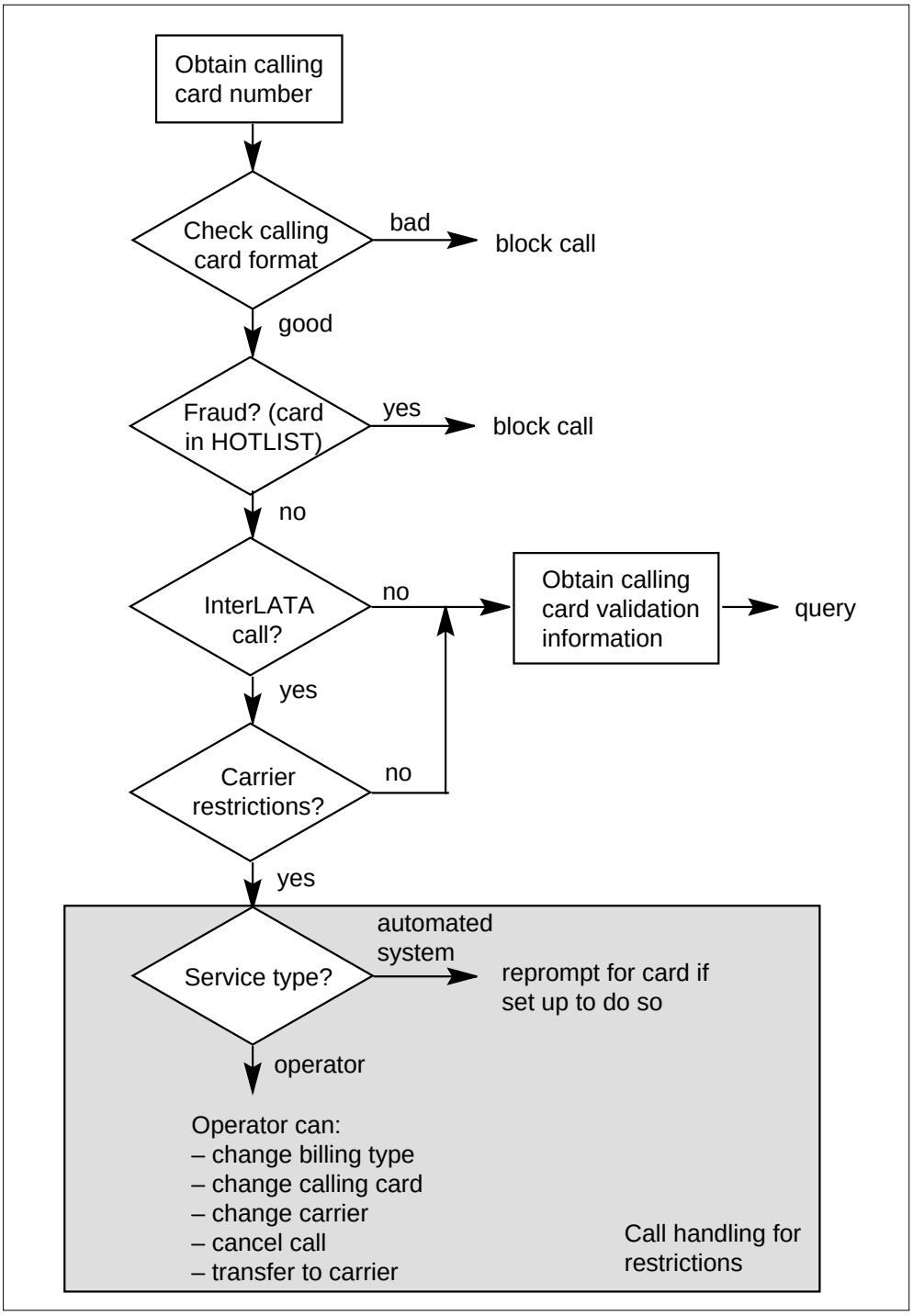

Disallowed Card Issuer Blocking (continued)

However, some calling card issuers no longer honored calls processed by the LEC and billed to certain IC calling cards. This meant that the card issuer did not have to share profits with the LEC. Therefore, the LEC needed to block subscribers from billing calls to IC cards if there was no mutual honoring agreement.

Optionality

This functionality is an option, controlled by Software Optionality Control (SOC). The SOC Utility provides two types of control:

- State control: The option can be turned to ON or IDLE . In the ON state, full functionality is available. In the IDLE state, no functionality is available, but datafill is allowed and retained. Eventually, the SOC utility will support the OFF state. However, this functionality will not support the OFF state when it becomes available.
- Control is based on usage. This functionality supports state control only. SOC Usage control is not supported by this functionality.

For information on using SOC, please refer to the *Software Optionality Control User's Manual*, 297-8991-901.

DCIB

This functionality allows blocking of CCITT and CIID cards for 0+, 0-, and DA calls that go to an automated system or operator for billing. The call types also include the call completion portion of a DA call if the call is paid by a calling card. The automated calling card systems supported by this functionality are as follows:

- Automated Calling Card Service (ACCS)
- Automated Alternate Billing Service (AABS) on the Voice Service Node (VSN) or the Interactive Voice Subsystem (IVS)
- AABS on the Network Application Vehicle (NAV).

This functionality is used on a directory number (DN) or trunk group basis, depending on whether the LEC is using OLNS to provide a list of card issuer codes and the trunk is eligible for OLNS. Following is a logic flow diagram which is discussed in later sections:

Disallowed Card Issuer Blocking (continued)

Logic flow with DCIB

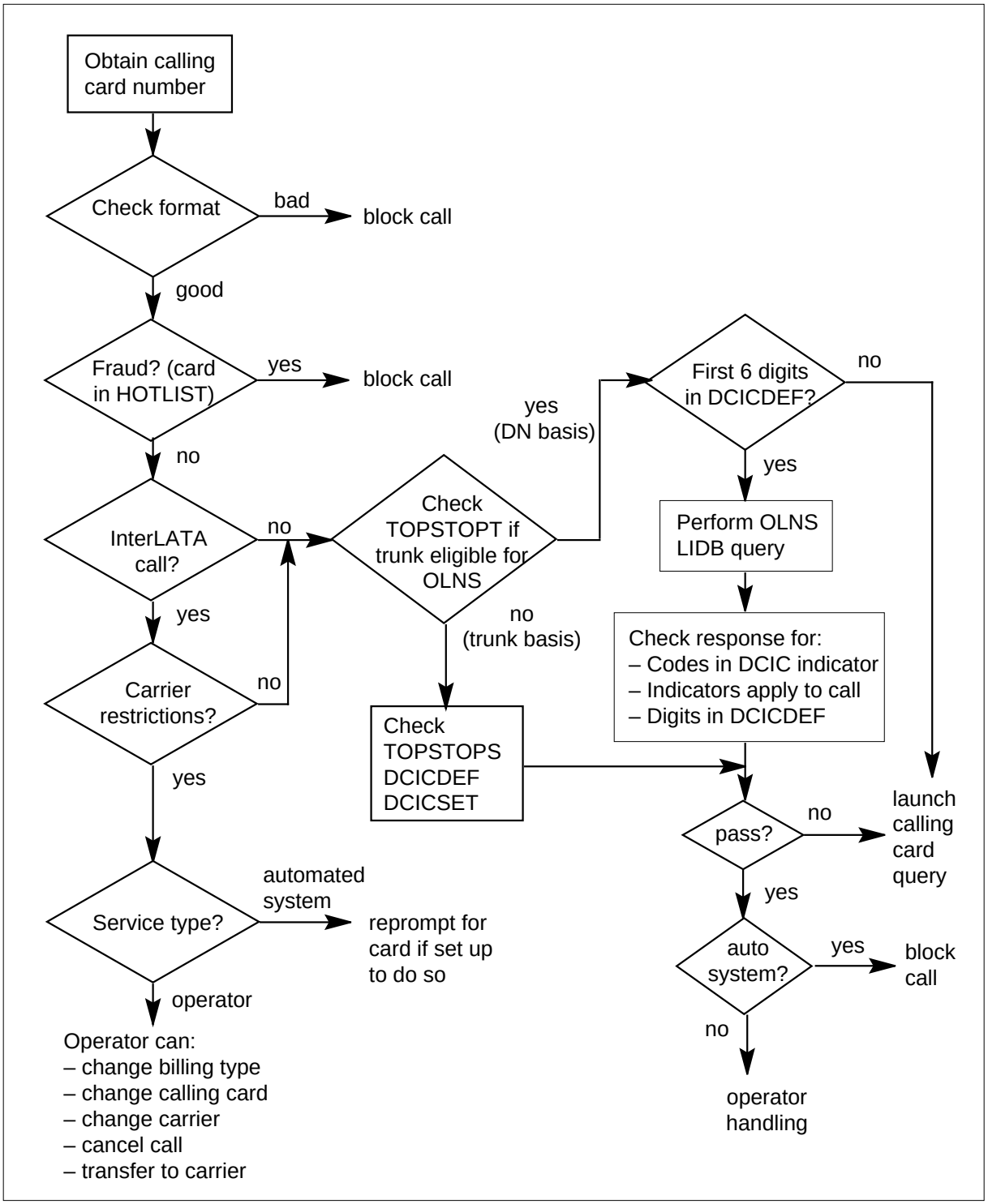

Disallowed Card Issuer Blocking (continued)

DN basis

If the incoming trunk is eligible for OLNS in table TOPSTOPT (field OLNSQRY = ALL), then the calling card is screened on a DN basis.

Note: OLNS must be used if the LEC wants to restrict calling cards on a DN basis.

The following is DN basis screening:

1. Perform the same checks as before DCIB: format, HOTLIST, intra or interLATA call, and carrier restrictions.
2. The DCIB SOC is ON.
3. Table TOPSTOPT field OLNSQRY = ALL
4. Check table DCICDEF field CODEDIGS for the first six digits of the calling card number, which is the card issuer code.
5. If the beginning digits are present, perform an OLNS LIDB query.

   If the OLNS SOC option is ON but the OLNS query cannot be launched, default data in the Originating Credit Card Indicator is used but the DCIB functionality implemented by this feature is not provided. This note applies to the DN functionality only.
6. Check the OLNS LIDB response as follows:
   - The card issuer codes are in the DCIC indicator.
   - The Originating Credit Card Indicator of the Originating Billing/Services Indicator parameter or the Additional Originating Billing/Services DA Indicator parameter applies to the call

The Originating Billing/Services Indicator indicates whether certain types of billing/service are allowed from the originating line. There are three values in this indicator that apply to toll and assistance and the DCIB feature as follows:

- 4 - card issuer restrictions for local calls
- 5 - card issuer restrictions for IntraLATA, non-local calls
- 6 - card issuer restrictions.

The Additional Originating Billing/Services DA Indicator indicates whether certain types of billing/service are allowed from the originating line for DA

Disallowed Card Issuer Blocking (continued)

calls. There is one value in this indicator that applies to directory assistance and the DCIB feature as follows:

- 3 - card issuer restrictions associated with this line.
- The returned digits are in table DCIDEF, field CODEID, which are the card issuer code.
  - — If all of the above checks are met, the card is disallowed and handled according to the service type as follows:
  - — calling card automated system - If either ACCS or AABS-VSN/IVS is handling the call, the card is blocked. If AABS-NAV is handling the call, a specialized announcement (if available) can be played to the customer.
  - — operator handling - A new screen display appears on the operator terminal indicating that the calling card cannot be used to complete the call. The subscriber can choose another billing method or discontinue the call.
  - — If no card match is found in table DCICDEF and data returned from the OLNS query, the card is allowed and a calling card query is performed.

The following is an example:

Example: The calling party's CCITT card number is 89122291999180640. The card issuer code taken from the CCITT card is 891222. An OLNS query is launched and the conditions for the DN functionality are met, then table DCICDEF is checked:

MAP display example for table DCICDEF

```
CODEDIGS    CODEID
-------------------------------------------------------
201099      201099
20119       201099
61911       909090
891222      891222
```

The card issuer code of 891222 (first six digits of the calling card number) is used to index table DCICDEF.

If a CODEDIGS match is found, the next step is to check the CODEID field for a match of card issuer codes returned from the OLNS LIDB. If one of the card issuer codes returned from the OLNS LIDB matches the CODEID of 891222, the calling card is disallowed.

Disallowed Card Issuer Blocking (continued)

Trunk group basis

If the incoming trunk is not eligible for OLNS in table TOPSTOPT (field OLNSQRY = NONE), then the calling card is screened on a trunk group basis.

Note: OLNS is not needed if the LEC wants to restrict calling cards for billing on a trunk group basis.

The following is trunk group basis screening:

1. Perform the same checks as before DCIB: format, HOTLIST, intraLATA or interLATA call, and carrier restrictions.
2. The DCIB SOC is ON.
3. Table TOPSTOPT field OLNSQRY = NONE
4. Check tables TOPSTOPT (new field DCIBIDX), DCICSET, and DCICDEF for the card issuer code.
5. If there is a card match in table DCICDEF, then the card is disallowed and handling is according to the service type (the same as for a DN basis):
   - calling card automated system - If either ACCS or AABS-VSN/IVS is handling the call, the card is blocked. If AABS-NAV is handling the call, a specialized announcement could be played to the customer, if available.
   - operator handling - A new screen display appears on the operator terminal indicating that the calling card cannot be used to complete the call. The subscriber then has the option to choose another billing method or discontinue the call.
6. If there is no card match in table DCICDEF, then the card is allowed and a calling card query is performed.

The following is an example:

Example: A call arrives at the TOPS office on incoming trunk group TBELLIC1 and the calling party's CCITT card number is 89122291999180640. The card issuer code taken from the CCITT card is 891222. If OLNS is not being used, then the incoming trunk group is used to perform the DCIB functionality. A look-up in table TOPSTOPT returns a DCIBIDX of 1, shown in the example that follows.

Disallowed Card Issuer Blocking (continued)

MAP display example for table TOPSTOPT

```
GRPKEY      ACDDATA  DISPCLG ADASERV ADASANS ANITOCLI OLNSQRY DCIBIDX
-------------------------------------------------------------------
TBELLQMSIC1  QMSCAM    N       NONE    NA       N        NONE   0
TBELLIC1     TOPSACD   N       NONE    NA       N        NONE   1
TBELLIC2     TOPSACD   N       NONE    NA       N        NONE   2
```

Using the DCIBIDX of 1, a look-up in table DCICSET returns card issuer codes of 891333 and 606060:

MAP display example for table DCICSET

```
DCIBIDX     CODEIDS
-----------------------------------------------------
0           $
1          (891333)  (606060) $
2          (909090) $
```

Next, the card issuer code of 891222 (first six digits of the calling card number) is used to index Table DCICDEF:

MAP display example for table DCICDEF

```
CODEDIGS    CODEID
-----------------------------------------------------
201099      201099
20119       201099
61911       909090
891222      891333
```

If a CODEDIGS match is found, the next step is to check the CODEID field for a match of card issuer codes in table DCICSET. This card would be restricted because the CODEID of 891333 datafilled against the CODEDIGS of 891222 matches one of the CODEIDS found in table DCICSET.

Calling card formats

CIID format

The CIID format is a fixed length format 14 digits in length. It has two major parts: the Account Number, and the Personal Identification Number (PIN).

Disallowed Card Issuer Blocking (continued)

The Account Number is 10 digits in length and consists of the following fields:

- **NXXWXX**— This is a six digit code assigned to requesting interexchange carriers for their use in 14-digit telecommunication cards. This is also known as the Card Issuer Identifier (assigned by Bellcore, code assignments were first made in the 8XXWXX and 9XXWXX series). The first digit range is 2-9, X range is 0-9, W is either 0 or 1.
- **XXXX**—Customer Account Number (assigned by the card issuer), 4 digits in length, X ranges in value 0-9

The Account Number is in the same format as a subscriber's directory number.

The PIN is 4 digits in length and consists of one field:

- **PIN**—Personal Identification Number, 4 digits in length, ranges in value 2000-9999

The following figure shows the layout of the CIID calling card format:

Directory Number Calling Card Format

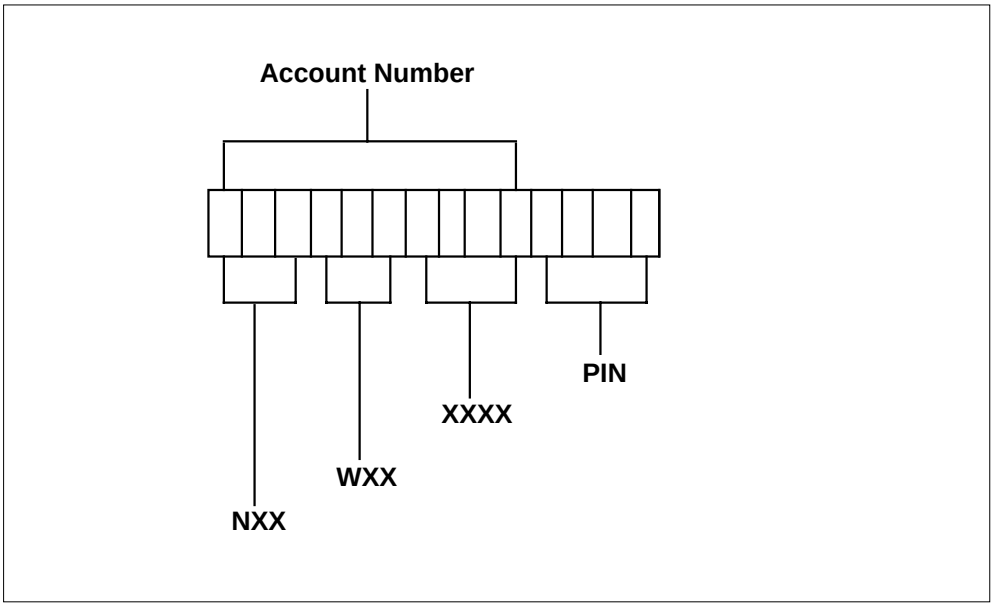

CCITT format

The CCITT calling card format was established to provide a world-wide standard for telecommunications calling cards.

Disallowed Card Issuer Blocking (continued)

The CCITT format is a variable length format 5-23 digits in length. It has four major parts: the Issuer Identification Number, the Individual Account Identification Number, the Luhn Check Digit, and the PIN.

The Issuer Identification Number is 4-7 digits in length and consists of the following fields:

- MII—Major Industry Identifier, 2 digits in length, each digit ranges in value 0-9, identifies the industry of the card issuer, value 89 assigned for telecommunications
- CC—Country Code, 1-3 digits in length, each digit ranges in value 0-9, identifies the country code or world zone of the card issuer, value 1 assigned for North America
- IIN—Issuer Identifier Number, 1-4 digits in length (fixed for any given Country Code), each digit ranges in value 0-9, identifies the card issuer within a given Country Code (combined length of CC and IIN cannot exceed 5 digits), length of 3 digits assigned for North America

The Individual Account Identification Number is 0-14 digits in length and consists of one field IAIN—Individual Account Identification Number. This field is 0-14 digits in length (fixed for any given Issuer Identification Number), and each digit ranges in value 0-9.

Note: While a 0 length Individual Account Identification Number is possible given the definition of the CCITT format, no practical use is seen for this.

The Luhn Check Digit is 1 digit in length and consists of one field LCD—Luhn Check Digit. This field is 1 digit in length, ranges in value 0-9, and provides local screening of the calling card by a format check.

Note: The combined length of the Issuer Identification Number, Individual Account Identification Number, and Luhn Check Digit (that is, the Primary Account Number length) cannot exceed 19 digits.

The PIN is 0-4 digits in length and consists of one field PIN—Personal Identification Number. This field is 0-4 digits in length, and each digit ranges in value 0-9.

Note: While a 0 length Personal Identification Number is possible given the definition of the CCITT format, it is not recommended due to security reasons.

Disallowed Card Issuer Blocking (continued)

The following figure shows the layout of the CCITT calling card format. Note that, since this is a variable length format (even down to individual fields), the fields in the figure can overlap each other. Fields are shown extending from their leftmost possible position to their rightmost possible position in relation to other fields.

Disallowed Card Issuer Blocking (continued)

CCITT Calling Card Format

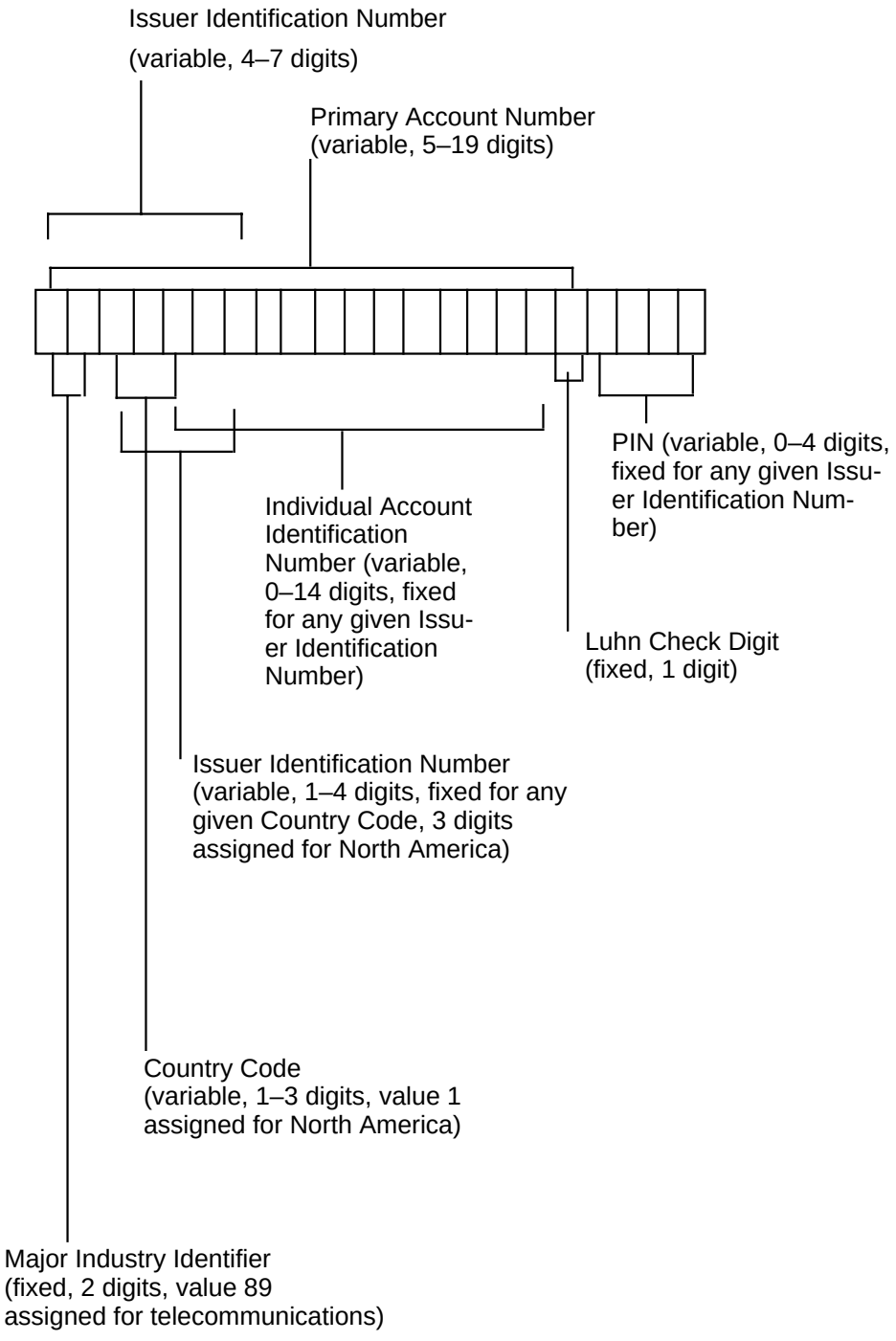

Disallowed Card Issuer Blocking (continued)

LOGS

None

Operational measurements (OMs)

None

Translations table flow

The Disallowed Card Issuer Blocking translations tables are described in the following list:

- Table TOPSTOPT specifies options for TOPS trunk and is used to block calling cards on a trunk group basis
- Table DCICSET is used to block calling cards on a trunk group basis.

The Disallowed Card Issuer Blocking translation process is shown in the flowchart that follows.

Table flow for Disallowed Card Issuer Blocking

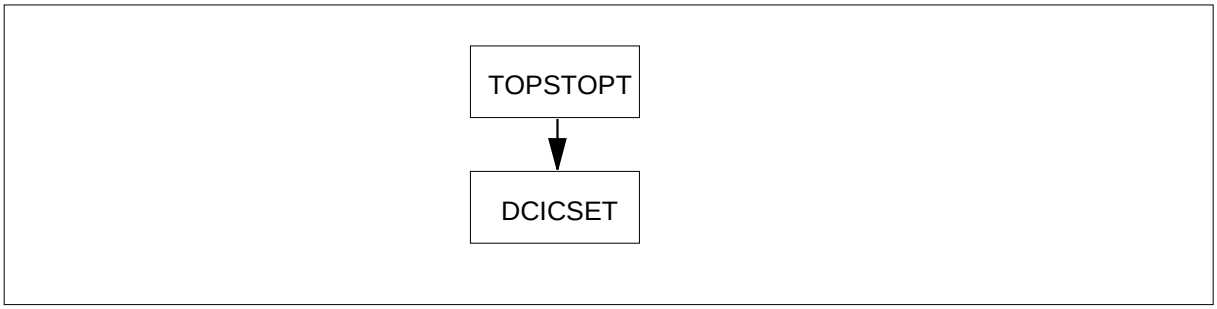

The following table lists the datafill content used in the flowchart.

Datafill example for Disallowed Card Issuer Blocking

Datafill table	Example data
TOPSTOPT	TBELLIC1 TOPSACD N NONE NA N NONE 1
DCICSET	1 891333 606060 $

Disallowed Card Issuer Blocking (continued)

Limitations and restrictions

The following limitations and restrictions apply to Disallowed Card Issuer Blocking:

- DCIB is designed for the United States market because other markets do not have the concept of LATAs.
- No new DCIB screen display is created for the TOPS-IV operator position. If the card is disallowed the special number flashes.
- Commercial Credit Cards are not supported for DCIB but the cards are not prevented from being datafilled in tables DCICSET and DCICDEF.

  Note: There is no impact to the DMS switch if the LEC datafills identifiers for commercial credit cards. It just means the LEC could also potentially block commercial credit cards.

  It is left up to the LEC to only datafill CCITT non-commercial cards.
- The TOPS system cannot distinguish CIID cards from RAO cards, so the LEC MUST datafill only CIID identifiers in tables DCICSET and DCICDEF.

  Note: There is no impact to the DMS switch if the LEC datafills identifiers other than CIID. It just means the LEC could potentially block other card types that also follow the 14 digit format.

  The TOPS system can only determine 14 digit calling cards.

Interactions

The following paragraph describes the interactions between Disallowed Card Issuer Blocking and other functionalities.

If OLNS is used, this functionality interacts with the OLNS functionality, TOPS OLNS Interface, ABS00101.

Activation/deactivation by the end user

Disallowed Card Issuer Blocking requires no activation or deactivation by the end user.

Billing

Disallowed Card Issuer Blocking does not affect billing.

Station Message Detail Recording

Disallowed Card Issuer Blocking does not affect Station Message Detail Recording.

Disallowed Card Issuer Blocking (continued)

Datafilling office parameters

Disallowed Card Issuer Blocking does not affect office parameters.

Datafill sequence

The following table lists the tables that require datafill to implement Disallowed Card Issuer Blocking. The tables are listed in the order in which they are to be datafilled.

Datafill tables required for Disallowed Card Issuer Blocking

Table	Purpose of table
DCICSET	Disallowed Card Issuer Code Set is used to block calling cards on a trunk group basis.
TOPSTOPT	TOPS Trunk Options specifies options for TOPS trunk and is used to block calling cards on a trunk group basis
DCICDEF	Disallowed Card Issuer Code Definition indicates cards to block on a DN or trunk group basis

Datafilling table DCICSET

Disallowed Card Issuer Code Set (DCICSET) is new table that is used along with tables TOPSTOPT and DCICDEF to block calling cards on a trunk group basis. Table DCICSET contains up to 5 card issuer codes for use in table DCICDEF. Table DCICSET is indexed by table TOPSTOPT, field DCICIDX.

If DCIB is preformed on a DN basis, which uses an OLNS query, then table DCICSET is not used.

This table is used if the following are true:

- the DCIB SOC is ON
- The trunk is present in table TOPSTOPT
- The trunk is not eligible for OLNS, that is field OLNSQRY = NONE.

Table DCICSET must be datafilled before table TOPSTOPT.

Disallowed Card Issuer Blocking (continued)

Following is a description of the table:

Datafilling table DCICSET

Field	Subfield or refinement	Entry	Explanation and action
DCIBIDX		0 to 511	Disallowed card issuer blocking index. This field is the table key from table TOPSTOPT, field DCIBIDX. DCIBIDX 0 is a default tuple that may not be deleted or changed. This default tuple allows the LEC to turn off DCIB on a trunk group basis without turning the DCIB SOC to IDLE.
CODEIDS		up to 5 numbers, each 6 digits	Code identifications. This field is the set of card issuer codes. The card issuer code is assigned by Bellcore to identify card issuer companies and is used in table DCICDEF. This field can have up to five entries of six digit numbers. For DCIBIDX 0, CODEIDS is empty.

Datafill example for table DCICSET

The following example shows sample datafill for table DCICSET.

MAP display example for table DCICSET

```
DCIBIDX     CODEIDS
------------------------------------------------------------
0
1           891333  606060 $
2           909090 $
```

The above example shows default tuple 0, which cannot be changed or deleted.

Disallowed Card Issuer Blocking (continued)

Error messages for table DCICSET

The following error messages apply to table DCICSET.

Error messages for table DCICSET

Error message	Explanation and action
`The DCIBIDX index is referenced in Table TOPSTOPT and cannot be deleted.`	A DCIBIDX must be datafilled in table DCICSET before it can be datafilled in table TOPSTOPT. If an attempt is made to delete a tuple from this table and the DCIBIDX is datafilled in table TOPSTOPT, this error message is displayed and deletion of the DCIBIDX is not permitted until DCIBIDX in Table TOPSTOPT is either changed to a DCIBIDX datafilled in table DCICSET or the trunk group in table TOPSTOPT is deleted.
`Deletion or change of this tuple is not permitted.`	DCIBIDX 0 may not be deleted or changed. If an attempt is made to delete DCIBIDX 0 from this table this error message is displayed and deletion of the DCIBIDX is not permitted.

Datafilling table TOPSTOPT

New field DCIBIDX Is added to block CIID and CCITT calling cards on a trunk group basis when the calling card issuer does not have a mutual honoring agreement with the LEC.

Dump and restore: The change to table TOPSTOPT requires a reformat procedure. For any software release before TOP08, the reformat procedure sets field DCIBIDX to a default of 0 for all trunks datafilled in the table.

The following table shows the datafill specific to Disallowed Card Issuer Blocking for table TOPSTOPT. Only those fields that apply directly to

Disallowed Card Issuer Blocking (continued)

Disallowed Card Issuer Blocking are shown. For a description of the other fields, refer to the data schema section of this document.

Datafilling table TOPSTOPT

Field	Subfield or refinement	Entry	Explanation and action
DCIBIDX		0 to 511	Disallowed card issuer blocking index. This field is an index into table DCICSET for blocking calling cards on a trunk group basis. The default value is 0, which means that the disallowed card issuer blocking functionality is not offered on that particular trunk group. This field is used if the following are true: • the DCIB SOC is ON • The trunk is not eligible for OLNS, that is, field OLNSQRY = NONE.

Datafill example for table TOPSTOPT

The following example shows sample datafill for table TOPSTOPT.

MAP display example for table TOPSTOPT

```
GRPKEY      ACDDATA  DISPCLG ADASERV ADASANS ANITOCLI OLNSQRY DCIBIDX
-------------------------------------------------------------------
TBELLQMSIC1  QMSCAM    N       NONE    NA       N        NONE    0
TBELLIC1     TOPSACD   N       NONE    NA       N        NONE    1
TBELLIC2     TOPSACD   N       NONE    NA       N        ALL     2
```

Error messages for table TOPSTOPT

The following error messages apply to table TOPSTOPT.

Error messages for table TOPTOPT

Error message	Explanation and action
`The DCIBIDX index must be datafilled in Table DCICSET prior to use in Table TOPSTOPT.`	A DCIBIDX value cannot be datafilled in table TOPSTOPT until it has been defined in table DCICSET. If an attempt is made to datafill a DCIBIDX that has not been defined in table DCICSET, the table change is not allowed and this error message is displayed.

Disallowed Card Issuer Blocking (continued)

Datafilling table DCICDEF

Disallowed Card Issuer Code Definition (DCICDEF) is new digilator table that is used along with tables TOPSTOPT and DCICSET to block calling cards on either a DN or trunk group basis.

Table DCICDEF contains the card issuer codes, key CODEDIGS, obtained from CIID or CCITT calling cards. It also contains field CODEID, which is the card issuer code returned from the OLNS LIDB or table DCICSET. If a CODEDIDS match is found and the CODEID matches a card issuer code returned from the OLNS LIDB or table DCICSET, then the IntraLATA Carrier calling card used for the call is disallowed.

There are no datafill sequence requirements.

Following is a description of the table:

Datafilling table DCICDEF

Field	Subfield or refinement	Entry	Explanation and action
CODEDIGS		1 to 6 digits	Code digits. This field is the table key and is the card issuer code that identifies the issuer of the calling card. It is a prefix of the calling card number. There in no default value for this field. This field is a digilator, similar to subtable STDPRTCT.STDPRT. Therefore, it is not possible to datafill two tuples that begin with the same digits and have different digit lengths. For example, tuples 23 23 and 231 231 cannot be used in the same table.
CODEID		up to 6 digits	Code identification. This field is a card issuer code returned from either the OLNS LIDB or table DCICSET. The card issuer code is assigned by Bellcore to identify card issuer companies.

Datafill example for table DCICDEF

The following example shows sample datafill for table DCICDEF.

Disallowed Card Issuer Blocking (end)

MAP display example for table DCICDEF

```
CODEDIGS    CODEID
-------------------------------------------------------
201099      201099
20119       201099
61911       909090
891222      891222
```

Translation verification tools

Disallowed Card Issuer Blocking does not use translation verification tools.

SERVORD

Disallowed Card Issuer Blocking does not use SERVORD.

Exchange Alternate Billing Service

Ordering codes

Functional group ordering code: ABS00101

Functionality ordering code: does not apply

Release applicability

BCS36 and later versions

Requirements

To operate, Exchange Alternate Billing Service has the following requirements:

- BAS Generic, BAS00003
- Operator Services Basic, OSB00101, and table TOPSFTR parameter TOPS_ON_OFF_SWITCH = Y
- TEL CCS7 Base, TEL00008

Description

The following features provide Exchange Alternate Billing Service:

Feature number	Feature name
AL0285	Exchange Alternate Billing Service
BV1121	Operator-Assisted Manual Inward Validation
AF0737	ACCS Enhancements
BV1114	Customer Dialed on TOPS Trunks
BV1115	Customer Dialed on Lines
BV1112	Operator-Assisted CCV
BR0680	Limit to Number of Sequence Calls
BV1113	Billed Number Screening
BV1116	Customer-Dialed Sequence Calls
AF1251	Automatic Call Gapping
BR13712	Enhancement for Blocking Special Numbers (BCS32)
UG900338	ACCS Calls Get 4 Attempts at Credit Card (BCS33)

Exchange Alternate Billing Service (continued)

Feature number	Feature name
NC0342	Enhanced EABS Error Processing (BCS34)
BK02741	LIDB and C7 Network Errors Lack Logs (BCS35)
UN200391	Incorrect AMA Record (BCS36)
BK08865	Calling Card Screening Enhancements (BCS36)

The TOPS Exchange Alternate Billing Service (EABS), like MCCS, is an automated TOPS system. This system handles 0+ calls with minimum operator intervention. The TOPS EABS provides billed number screening and calling card validation at a Line Information Database (LIDB) through CCS7 data links.

In documentation, the names EABS and ACCS (Automated Calling Card Service) refer to the same service. The ACCS is the Canadian market offering of billing and calling card database access through SS7 links. The EABS is the US market offering. Some differences are present between the two services. The name ACCS appears in the DMS tables for EABS.

The MCCS and EABS calls are considered to be the same call type in DMS call processing. The difference between MCCS and EABS is that queries go out over different links. As a result, MCCS and EABS share most of the same data tables and office parameters. Examples of shared datafill are MCCS announcements, receivers, and MCCS tuple in table OPRTRANS for sequence calls. The system requires EABS (MCCS), ABS00101.

The MCCS accesses BVC, and ACCS accesses LIDB.

Inter-LATA 0+ calls can use EABS if TOPS provides operator services for the inter-LATA carrier through the TICS, OSEA0101. Refer to TICS, OSEA0101- field AUTZPLUS in table TOPEACA .

This feature package provides the following services:

- Automatic Calling Card Service
- Collect service
- Third Number Billing
- Terminating inward service - ability to assist operators in offices that cannot handle database queries (inward calls).
- Calling card validation

Exchange Alternate Billing Service (continued)

- Billed number screening
- Automatic call gapping

Descriptions of these services appear in the following pages. This package provides sequence call control on ACCS calls.

User Perspective

Exchange Alternate Billing Service (EABS) is a TOPS feature package that allows operating companies to validate credit card and billed number screening queries. The EABS follows E800/SSP service as the second transactions-based service that Transaction Capabilities Application Part (TCAP) supports.

The EABS supports the change of Operating Companies to use the billing validation database. This process eliminates the need to access the BVC, and reduces operating expenses.

A change in operation from the point of view of the subscriber does not occur.

AL0285 - Exchange Alternate Billing Service

This feature provides the Automatic Calling Card Service (ACCS). This feature also provides the ability to perform calling card validation and billed number screening at a Line Information Database (LIDB) through Common Channel Signaling Number 7 (CCS7). A gradual shift occurs from Billing Validation Center (BVC) to LIDB. Information can be in one of the two databases. Table CCVPARMS indicates the database for a billing number (NPA-NXX).

BV1121 - Operator-Assisted Manual Inward Validation

This feature allows a TOPS office to act as host for manual inward validation of credit card numbers. The credit card numbers belong to operators in offices that cannot handle these functions.

AF0737 - ACCS Enhancements

This feature provides enhancements to messaging between the office and the database for ACCS calls through CCS7 for LIDB queries.

BV1114 - Customer Dialed on TOPS Trunks

This feature allows subscribers to enter calling card numbers and complete calls without access to an operator.

BV1115 - Customer Dialed on Lines

This feature allows the system to support ACCS service from subscriber lines in a DMS-100/200 TOPS environment without the need for looparound trunks.

Exchange Alternate Billing Service (continued)

BV1112 - Operator-Assisted CCV

This feature allows an operator to provide calling card verification (CCV) service for calling card billing that requires operator assistance.

BR0680 Limit to Number of Sequence Calls

This feature allows the Operating Company to create an office parameter. The parameter limits the number of sequence calls from a single LIDB query.

BV1113 - Billed Number Screening

This feature allows the subscriber to specify if collection can occur. The subscriber can specify if the system accepts third number billing at a specified line number.

BV1116 - Customer-Dialed Sequence Calls

This feature allows ACCS subscribers that have correctly entered calling card numbers to make additional calls. The subscribers do not have to enter the calling card numbers again to make the calls.

AF1251 - Automatic Call Gapping

This feature provides Automatic Call Gapping (ACG) control for ACCS. An ACG message indicates the rate at which the system must send queries for a given NPA-NXX to the LIDB. This feature provides ACG control for LIDB overload condition.

BR13712 - Enhancement for Blocking Special Numbers (BCS32)

In BCS32, the range of values of field VALTYPE expands to include BLK. Other values that data can be entered in to are LIDB, BVC, SDB, and MANUAL. The alternate billing number can index table CCVPARMS, and this field can be entered as BLK. When this event occurs, the system blocks the alternate billing to this number.

UG900338 - ACCS Calls Get 4 Attempts at Credit Card (BCS33)

When a subscriber performs ACCS sequence calls, the number of retries increases from 1 to 3. The number of attempts increases from 2 to 4. This increase accounts for the subscriber that keys too quickly, does not hear the announcement, and continues to key. These actions cause an additional error. Refer to the error conditions section in ACCS sequence calls.

NC0342 - Enhanced EABS Error Processing (BCS34)

This feature allows datafill control of errors from an LIDB query. This feature also allows greater routing flexibility through table GTTNAME. The CLD number is optionally required for 14-digit LIDB queries, and for better time-out and sequence call query control. The NC0342 allows verification of

billing acceptance by a live operator. This feature also allows differentiation between intra-LATA and inter-LATA calls.

BK02741 - LIDB and C7 Network Errors Lack Logs (BCS35)

The system creates log TOPS121 for LIDB returned errors. This log is correct when this functionality (Exchange Alternate Billing Service) is enabled. Refer to the Logs Reference Manual for additional information.

UN200391 - Incorrect AMA Record (BCS36)

The calling card number (not PIN) of the billing number in the AMA record is populated. This action occurs if the card number is an RAO or a CIID. In the past, the first three digits of the Alternate Billing digits 1 field were zeroed out. The digits were zeroed out if a successful query occurred from the validation database and the card number was an RAO or CIID. Now, the first three digits of this field stay intact.

To determine if this feature is operational:

1. Add an RAO or CIID number (RAO-0/1XX-XXXX-NXXX) to table ACCSDB and an RAO to table RAOCHECK.
2. Make a 0+ call and at the bong, tone enter the RAO or CIID number.
3. Check the AMA record module code 52 Alternate Billing digits 1 field to make sure that the digits are complete.

BK08865 - Calling Card Screening Enhancements (BCS36)

This PRSDOC allows prevention of call completion. This event occurs when a subscriber attempts to complete a call on one interexchange carrier (IEC) and the subscriber uses a calling card restricted to another IEC. This PRSDOC is also in TOPS Inter-LATA Carrier Service, OSEA0101, and EABS Canada, ABS00101..

Operation

The EABS freed the operating company from dependence on ATC Billing Validation Center (BVC) and the CCIS6 network for these applications. The EABS frees the CCS7 network and the LIDB as an alternative to free the operating company.

Evolution of EABS

In BCS24, Northern Telecom introduced EABS, ABS00101. This package allows the Operating Company to query a Line Information Database (LIDB), through Common Channel Signaling Number 7 (CCS7) protocol. The Operating company queries an LIDB for validation of a fixed 14-digit format calling card number. Refer to package Expanded Calling Card Format SS7, ABS00101, for a description of the different calling card formats. The EABS

Exchange Alternate Billing Service (continued)

followed E800/SSP service as the second transactions-based service that Transaction Capabilities Application Part (TCAP) supported.

In BCS29, feature TOPS Expanded Calling Card Format (in Expanded Calling Card Format SS7, ABS00101) extended EABS abilities to accommodate the Expanded Calling Card format. The CCITT format, also called the international calling card format appears in CCITT Recommendation E.118.

In BCS31, feature TOPS CCITT Calling Card SS7 Validation (in Expanded Calling Card Format SS7, ABS00101), extended EABS abilities. This feature supported validation of the CCITT calling card over CCS7 network links to extend the abilities. Now, the system routes CCS7 queries for CCITT calling cards to the Billing Validation Database (BVD). The system routes queries for 14-digit calling cards or billed numbers to an LIDB.

Before BCS34 feature NC0342, EABS consisted of the above three packages. The EABS was able to validate calling cards (CCITT or 14-digit formats) or billed numbers over the the CCS7 network.

Note: When the call is collect or billed to a Third Number, the call is a billed number call. When the subscriber bills the call to a calling card, the call is a calling card call. Billed Number Service (BNS) validate billed numbers. Calling Card Validation (CCV) validates calling card numbers.

Bellcore standards for EABS service are in Bellcore specification TR-TSY-000271 (Operator Services Systems Generic Requirements), issue 1, revision 4, January 1990. The EABS implements a subset of these specifications.

EABS validation over the CCS7 network

The DMS gains access to a Billing Validation Database (BVD) or an LIDB via the CCS7 network. To address nodes (databases) in the network , a Global Title (GT) is used. A Global Title is information like dialed digits that is used to derive the CCS7 routing address.

Before NC0342 in BCS34, EABS provided automatic validation for cards in the Expanded (CCITT) and normal 14-digit format. The 14-digit calling card (and BNS) queries must use the same Global Title. Expanded calling card queries can use a different Global Title for each card issuer.

Before feature NC0342, EABS determined that a call required validation of the number to which the call was billed. The call required validation when the number was not the calling (CLG) number. This process occurs when the subscriber asks to bill the call to a calling card, a Third Number, or to the called number (a collect call). This process can take place at an Operator Position or

in an automated environment. The TOPS supports two automated environments, Automated Alternate Billing Service (AABS) and Automatic Calling Card Service (ACCS).

When the need for validation is determined, the system uses table CCVPARMS to determine how the query must occur. One of the values that can be entered against a billed number is LIDB. The system uses the EABS and the CCS7 network if table CCVPARMS specifies LIDB.

Note: When LIDB is entered in table CCVPARMS, 14-digit calling card and the system launches billed number queries to the LIDB and CCITT. The system launches calling card queries to the BVD. In this document, statements about an LIDB query also apply to BVD queries.

For queries to an LIDB, the billed number is used as a Global Title. The STP uses Global Title Translation type to identify which translation table must be used to obtain routing information. The STP uses the Global Title to identify the appropriate translation table. The name of the Global Title Translation type is datafillable for each card issuer in table INTCCFMT, field GTNAME. This name must be the same as the name entered as a key in table C7GTTYPE.

Package abilities

The Exchange Alternate Billing Service (EABS) feature package provides the operating company with the ability to perform calling card verification. The EABS feature also allow the Operating Company to perform billed number screening with a Line Information Database (LIDB). The Operating Company performs these functions for the following services:

- Automatic Calling Card Service (ACCS) - ACCS allows the subscriber to make a local or toll call. This service allows the subscriber to charge the call to a calling card that the Operating Company provides.
- Terminating Inward Service - This service allows the operator to assist or handle calls for an operator in another office. The second operator requires assistance in the completion the call or performance of a verification function.
- Collect Service - This service allows the subscriber to place a call and bill the call to the called number.
- Third Number Billing Service - This service allows the subscriber to place a call and bill the call to a number other than the calling or called numbers.

The system sends Calling Card Validation (CCV) and Billed Number Screening (BNS) queries to a Billing Validation Center (BVC) or to an LIDB. The software determines if the BVC or the LIDB store the billed number. The software consults the CCVPARMS table and performs a six-digit lookup on

Exchange Alternate Billing Service (continued)

the number that represents the billing number. The information in the CCVPARMS table determines if the system sends a CCIS query to the BVC. The information also determines if the system sends a CCS7 query to the LIDB. If the system sends the query to the BVC, EABS (MCCS), ABS00101, determine how the LIDB handles the query. This document deals with queries that the system sends to the LIDB.

This feature package is available with TOPS and TOPS MP. References to an operator or an Operator Position do not make distinctions between TOPS and TOPS MP. The acceptance is that the feature package applies to TOPS and TOPS MP.

When you refer to an operator screen display that does not differ between TOPS and TOPS MP, use the generic term CRT. When you discuss a TOPS screen display, use the name Operator Position CRT. When you discuss a TOPS MP screen display, use the name MP CRT.

Automatic Calling Card Service (ACCS)

The ACCS allows a subscriber to charge a local or toll call to a 14-digit calling card number (CCN). The Operating Company or a Revenue Accounting Office (RAO) provide the CCN.

When a subscriber places a credit card call, the Operating Company query a BVC or an LIDB. The datafill determines if the Operating Company queries a BVC of an LIDB. The CCVPARMS table determines which database is queried. If the BVC is queried, the system handles the call as a Mechanized Calling Card Service (MCCS) call. Refer to EABS (MCCS), ABS00101, for details on MCCS calls. If the LIDB is queried the system handles the call as an ACCS call.

Exchange Alternate Billing Service (continued)

Descriptions of the following two tables appear in the sections that follow.

ACCS announcements

Announcement number	Announcement	Explanation
1	PLEASE DIAL YOUR CARD NUMBER OR 0 FOR AN OPERATOR NOW.	Prompt announcement on a subscriber-dialed ACCS call through the tone plus prompt announcement OST.
2	PLEASE DIAL YOUR CARD NUMBER AGAIN NOW. (pause) THE CARD NUMBER YOU HAVE DIALED IS NOT VALID.	A subscriber dialing error occurs on a subscriber-dialed ACCS call.
3	PLEASE DIAL YOUR CARD NUMBER.	Prompt announcement after an error occurs and the system gives the alerting tone.
4	PLEASE HANG UP AND DIAL 0 PLUS THE NUMBER YOU ARE CALLING. (pause) THE CALLING CARD NUMBER YOU HAVE DIALED IS NOT VALID.	The subscriber entered an incorrect calling card number and the error threshold is reached. The subscriber must hang up and dial the call again.
5	YOU MAY DIAL ANOTHER CALL NOW.	Prompt announcement on a subscriber-dialed ACCS sequence call.
6	PLEASE DIAL THE NUMBER YOU ARE CALLING NOW. (pause) THE NUMBER YOU HAVE DIALED IS NOT CORRECT.	A subscriber dialing error occurs on a subscriber-dialed ACCS sequence call.
7	PLEASE DIAL THE NUMBER YOU ARE CALLING.	Prompt announcement after an error occurs on a sequence call.

Note: * The system does not support these announcements.

Exchange Alternate Billing Service (continued)

ACCS announcements

Announcement number	Announcement	Explanation
8	PLEASE HANG UP AND DIAL 0 PLUS THE NUMBER YOU ARE CALLING. (pause) THE NUMBER YOU HAVE DIALED IS NOT CORRECT.	The subscriber entered an incorrect called number and the number of errors exceeds the threshold. The subscriber must hang up and dial the call again.
9	PLEASE HANG UP AND DIAL 0 PLUS THE NUMBER YOU ARE CALLING	Termination announcement after the number of errors exceeds the threshold without the entry of another number.
*10	VALID NUMBER, UNRESTRICTED PIN, RAO XXX.	Reply to inward validation: valid calling card number, unrestricted PIN, known RAO.
*11	VALID NUMBER, RESTRICTED PIN, RAO XXX.	Reply to inward validation: correct calling card number, restricted PIN, known RAO.
*12	VALID NUMBER, UNRESTRICTED PIN, RAO UNAVAILABLE.	Reply to inward validation: correct calling card number, unrestricted PIN, unknown RAO.
*13	INVALID NUMBER, PLEASE DIAL AGAIN NOW.	Reply to inward validation: incorrect calling card number
*14	INVALID NUMBER, PLEASE HANG UP.	Reply to inward validation: incorrect calling number, error threshold reached.
15	PLEASE HANG UP AND DIAL DIRECT. (pause) THIS NUMBER CANNOT BE DIALED AS A SEQUENCE CALL.	Error announcement given to subscribers that dial a new forward number that is restricted as a sequence call.

Note: * The system does not support these announcements.

Exchange Alternate Billing Service (continued)

ACCS announcements

Announcement number	Announcement	Explanation
16	THANK YOU.	This announcement applies when the subscriber enters the card number correctly.
17	(alert tone)	Alert tone prompt for calling card dialing. This tone is a complex tone that consists of 60 ms DTMF tone (941/1477 Hz at -10dBm). The 940 ms of exponentially decayed dial tone 40/350 Hz with constant time of 200 ms, first at -10dBm) immediately follows this tone.
Note: * The system does not support these announcements.		

Sequence call timing parameters

Parameter number	Timing length (s)	Description
T1	5	Initial timing after calling card service for tone-only treatment.
T2	1	Initial timing after alert tone for tone-plus-prompt treatment.
T3	5	Timing after prompt announcement.
T4	3	Timing after error announcement.
T5	3	Timing after tone in error sequence.
T6	5	Timing after prompt in error sequence.
T7	2	Timing after the system detects a # signal and before a sequence call prompt.
T8		Not used
T9	5	Total timing after fourth digit
T10	6	Interfield timing on all calls

Exchange Alternate Billing Service (continued)

Sequence call timing parameters

Parameter number	Timing length (s)	Description
T11		Not used
T12	2	Timing after fourth digit on MCCS or ACCS calls to distinguish PIN
T13	7	Interdigit timing on every calls
T14		Not used
T15	10	Timing after sequence call prompt announcement

The ACCS calls are one of the following:

- Subscriber Dialed
- Operator Assisted

Subscriber-Dialed ACCS Calls

In a subscriber-dialed ACCS call, the subscriber enters the CCN and completes the call. The subscriber performs these actions without assistance from an operator on system-identified 0+ (national) and 01+ (international) calls. The system bills the call to the CCN.

When a subscriber places a subscriber-dialed ACCS call, the subscriber dials 0 plus a 7- or 10-digit called number (a 0+ call). After the subscriber dials the called number, the subscriber receives an alert tone or a recorded announcement. The tone or announcement prompts for the 14-digit CCN. If the calling number and the CCN are valid, the system connects the call and bills the call to the CCN. The ACCS announcements table gives a list of the announcements available for ACCS calls.

Note: If the subscriber requires an operator, the subscriber can dial 0 to access the operator.

A subscriber can place subscriber-dialed ACCS calls from Dual Tone Multi-frequency (DTMF) telephones.

The switch performs a subscriber-dialed calling card validation. The switch first applies Originating Station Treatment (OST). The switch applies OST when the calling party goes off-hook and dials 0+ or 01+.

Exchange Alternate Billing Service (continued)

Three types of OSTs can be applied to a line.

- OST 1 - The system routes the calling party to the operator because the originating station (rotary telephone) does not provide ACCS service
- OST 2 - The switch applies alert tones to the originating station
- OST 3 - The switch applies alert tones and prompt announcements to the originating station

The OST that the switch applies to a line determines if the line receives ACCS service. The OST also determines if the system plays a tone, or a tone and an announcement to the calling party.

The datafill in the MCCSOST table determines which OST the switch applies. This table contains one tuple for each incoming and two-way TOPS trunk group in the office. Each tuple contains two parts. One part applies to calls that originate from public telephones. The other part applies to calls that originate from private telephones.

In each part, one of three states must be specified: no service, calling card service, or BVC lookup (consult BVC or LIDB). If the value is no service, the switch applies OST 1 to the call. If the value is calling card service, the operating company must specify OST 2 or OST 3. The value can be BVC lookup. When this event occurs, the operating company must specify the default action to take if the BVC query (or LIDB) cannot occur (OST 1, 2, or 3). See the data schema section of this document for complete details on the MCCSOST table.

The BVC lookup returns a result that corresponds to one of the three OSTs or fails. The system can send the BVC lookup to an LIDB or BVC. The datafill in the CCVPARMS table determine if the BVC lookup goes to a BVC or LIDB. If the BVC lookup fails, the switch applies the failure OST. The Operating Company specifies this OST.

If a call originates on a trunk, that does not have an entry in the MCCSOST table, the switch applies OST 1.

A trunk group can have a state of no service or calling card service. A trunk group can have these statuses if the calls that originate on public telephones come from the same OST. A trunk group can also have these states if calls that originate on private telephones for that trunk group come from the same OST. In other occurrences, the trunk group must have the status of BVC lookup. Each trunk group has two separate states. For example, calls from public telephones that originate on a trunk group can have a status of calling card

Exchange Alternate Billing Service (continued)

service. Calls that originate from private telephones on the same trunk group can have a BVC lookup status.

The system routes calls that originate on lines in a DMS-100/200 TOPS office to ACCS. The associated parts include one-party flat-rate lines, ANI lines without options, coin lines, and one-party flat-rate hotel lines.

To determine the type of OST to apply to a line, lines associate with the CLLI name of the TOPS trunk groups. To determine the type of OST, associate the entry in the ZEROMPOS field of the LINEATTR table with a CLLI in the TOPSLNDIS table. This CLLI name indexes the MCCSOST table, which contains the OST information.

Coin Coin-First (CCF) telephones require that the telephone retain the first deposit to enable the keypads. Offices that offer ACCS must be able to retain the coin deposit. The telephone returns the first deposit when the calling party disconnects.

When the switch applies OST 2 or 3, the subscriber can access an operator, if required. To access an operator, the subscriber can do one of the following:

- time-out when the system prompts the subscriber for the CCN
- dial 0 and not input the CCN
- flash the switch hook

After a subscriber dials 0 and the called number, if the operator is not required, the subscriber inputs the 14-digit calling card number. The subscriber can also input a four-digit Personal Identification Number (PIN). The subscriber inputs these numbers if the billed number is the same as the called number. The system performs a format check on the CCN.

The correct formats for a CCN are:

- NPA+NXX+XXXX+PIN
- RAO+0/1XX+XXXX+PIN

> ***Note:*** Numbers 500, 700, and 800 are valid NPAs. These numbers are not valid when used in calling card service. If the subscriber enters a four-digit PIN, the first digit cannot be 0 or 1. The called number cannot be INWATS, directory assistance, or overseas.

A credit card call where the CCN is present in the Hot List (HOTLIST) table does not complete. The subscriber receives the invalid number announcement. The system prompts the subscriber to dial again. The subscriber can receive

the invalid number announcement three times. When this event occurs, the system asks the subscriber to hang up and dial 0 for an operator.

The HOTLIST table contains credit card numbers, special billing numbers, and third numbers. The Operating Company classifies these numbers. These numbers can be invalid or used for fraud. When a match occurs with a number that the operator enters, HOT flashes on the Operator Position CRT.

If the calling card number passes the format check, the system consults CCVPARMS table to determine if a LIDB query occurs. If an LIDB query occurs and the calling card number is valid, the system plays the thank you announcement and transmits the number. The ACCS announcements table contains a description of announcement 16. If the LIDB query is not successful, the system returns announcement 2 to the caller. The ACCS announcements table contains a description of announcement 2. Announcement 2 requests that the caller enter the calling card number again. The subscriber does not always dial in 3 s (timer T4, refer to the Sequence call timing parameters table). When this event occurs, the system sounds the alert tone (announcement 17). The subscriber has an additional 3 s (T5) to dial before the system prompts the subscriber with announcement 3. After announcement 3, the subscriber has 5 s (T6) to dial. If a subscriber does not dial digits in this time span, the system gives the subscriber announcement 9 and terminates the call.

The subscriber can enter the calling card number again after the first prompt announcement (announcement 2). The number again can fail to pass the check. In these conditions, the system plays announcement 4 to the subscriber and terminates the call. If the second attempt is successful, the system transmits the number and plays announcement 16 to the caller.

Operator-Assisted ACCS Calls

An operator-assisted ACCS call requires help from the operator to complete. The following conditions require operator assistance.

- The subscriber wants to place an ACCS call, but the telephone in use is not a DTMF telephone. The subscriber can dial 0- to access the operator and have the operator enter the called number and the CCN.
- The toll billing office cannot receive automatic calling card digits. The operator must enter the CCN.

Normally, the toll office to which the system routes the call provides prompts, announcements, and receivers (which collect the DTMF digits). The toll office can determine, for each trunk group, if the originating station has ACCS service. The ANI can identify calling numbers. A calling number can

Exchange Alternate Billing Service (continued)

determine direct signaling queries. A direct signaling query to the LIDB can determine ACCS ability.

- The local end office cannot provide Automatic Number Identification (ANI) spill to the toll office.
- The local end office and the toll office have ANI failure.
- The subscriber requires operator assistance for special reasons, e.g., a person-to-person call. The customer can dial 0-, or 0 and the called number and follow announcement instructions to access operator, if available. The customer can also time-out for an operator, i.e., exceed the time allowed to input CCN.

Operator-assisted calling card service is available for call types other than 0+. The service is available for call types that reach the operator and for which calling card billing is requested. Other call types include 0-, 1+ coin, and 1+ hotel.

An ACCS CCV query occurs through a direct CCS7 query to the LIDB database. The system sends this query when the operator enters the calling card number for the subscriber. Average response time for an LIDB query must not exceed 2 s before BCS34. In BCS34, a time-out value can be entered for each NPA-NXX with EABS, ABS00101. This process occurs in tables CCVPARMS (field TIMEOUT) and BNSPARMS (field TIMEOUT). When the operator receives the reply from the LIDB, the status of the calling card appears. See Calling Card Validation (CCV) in this document for details.

When the subscriber reaches the operator, the subscriber gives the calling card number to the operator. The operator enters the number. The correct class charge for calling party billing to a CCN is Station Special Calling or Person Special Calling. For collect calls billed to a calling card, the charge class is Station Special Called or Person Special Called. Refer to Personal Identification Number in this document for additional information on class charge restrictions. The call progresses in the same method as other operator-handled calls that require special billing, except for the method of calling card validation. When the system accepts billing information, the system transmits the call and the operator releases the call.

If the call is an intra-LATA call, the TOPS software determines if the LIDB or BVC store the billed number. The TOPS software consults the CCVPARMS table to determine the location of the billed number. The system performs a six-digit lookup of the billed number to determine if the BVC or the LIDB contains information for the billed number. Refer to the data schema section in this document for additional details on the CCVPARMS table.

If the toll office can process ACCS calls, but the subscriber that places the call requires an operator, the subscriber can access the operator. In this occurrence, the system terminates automatic calling card reception and attaches an operator. If the subscriber already entered the calling card number, the subscriber must hang up and dial the number again to access an operator.

When the subscriber reaches the operator, the subscriber quotes the calling card number and the operator inputs the information.

The system sends a CCV query to the LIDB to validate the CCN. If the CCV query is successful, the response from the LIDB includes the following:

- Billing Number
- Company Identifier, which identifies the Operating Company with which the call must associate.
- Calling Card Subaccount number (CCSAN)
- Inter-LATA carrier indicator
- PIN restriction indicator
- Record status indicator

A successful CCV means that no CCN service denial, and no PIN service denial are present, and a matching PIN is found.

If the query indicates that the CCN is not correct, table ACCSERR determines error handling (ACC, VER, ATOPR, or BLK). If table ACCSERR code is ATOPR (attach operator), the CCN flashes on the CRT. The operator verifies the CCN again. If CCN fails the second time, the operator asks the customer to provide alternate billing for the call.

Calling Card Number

The calling card number (CCN) is a 14-digit number in one of the following formats:

- NPA+NXX+XXXX+PIN
- RAO+0/1XX+XXXX+PIN

The ten-digit part of the number is the Calling Card Account Number (CCAN). The remaining four digits are the Personal Identification Number (PIN). These CCAN and PIN form the Calling Card Number (CCN).

The CCAN is normally the Directory Number (DN) to which the call is billed (NPA+NXX+XXXX). The billing number can also be a special non-directory billing number in the form of RAO+0/1XX+XXXX. The RAO is a number

Exchange Alternate Billing Service (continued)

that represents the Revenue Accounting Office that assigned the billing number.

The subscriber can designate a PIN to be restricted or unrestricted. A restricted PIN permits station-to-station calls to the billing number with collect service. A restricted PIN also permits subscriber-dialed calling card service calls. An unrestricted PIN is valid for calls to every destination and can be used for station or person billing. See Personal Identification Number for additional details.

Personal Identification Number: Two types of PINs can associate with a CCAN: restricted and unrestricted. A restricted PIN is valid for station calls to the billing number (collect-only service). An unrestricted PIN is correct for calls to every destination, and for station or person calls.

For restricted PIN, the subscriber must quote the four-digit PIN to the operator, and not the full 14-digit calling card number. The subscriber must quote the four-digit PIN because the billed number and the called number are the same.

If the operator inputs a four-digit calling card number, the system assumes the number to be a PIN. The calling card number consists of the ten-digit called number and the four-digit PIN. If the call is an operator code, an overseas number, an INWATS, or a Directory Assistance number, the system rejects the PIN.

The operator can enter a four-digit number or a 14-digit number. The reply from the LIDB indicates if the calling card number is restricted. Person calls are not allowed. If the billing number does not match the called number, the system rejects the calling card number.

ACCS Sequence Calls

The ACCS sequence calls can occur for calling cards with unrestricted PINs. When an ACCS call is complete, the calling party waits for the called party to go on-hook. After the called party goes on-hook, the calling party dials the number sign (#), and the new called number. The calling party dials these numbers to initiate another ACCS call. The system plays the thank you message. If the system can translate the called number, the system connects the calling party to the called party. In other occurrences, the system connects the calling party to a tone or announcement.

The calling party has 20 s after the called party disconnects to initiate a sequence call. The calling party does not always initiate a sequence call in 20 s. When this event occurs, the system terminates the call and gives the calling party a dial tone.

Exchange Alternate Billing Service (continued)

After the calling party dials #, the calling party has 2 s (T7) to dial the called number. If the calling party does not dial in 2 s, the system prompts the calling party with announcement 5. After the system plays announcement 5, the calling party 10 s (T15) to dial the called number. If the calling party does not dial the called number, the system plays announcement 5 is played. The calling party has an additional 10 s to input the called number. If, again, the calling party does not enter the called number, the system plays announcement 9 and terminates the call.

The calling party on the first ACCS call does not always receive an answer from the called party. When this event occurs, the calling party can terminate the call. The calling party can begin an ACCS sequence call. To begin an ACCS sequence call, the calling party must dial #. This action applies to every call in a sequence, even the first one.

Correct dialing sequences for ACCS sequence calls are as follows. The following sequences assume that the calling party dials a # to initiate a sequence call.

- 01 + country code + national number that precedes an optional # for international sequence calls
- optional 0 + 7/10-digit called number that precedes an optional # for domestic sequence calls

Number Sign: The subscriber uses the number sign (#) to initiate a sequence call and as an optional end-of-dialing indicator. The following conditions are present.

- The system treats a # that the system receives from the calling party as a request to initiate a sequence call. The system receives this # after the system outpulses a subscriber-dialed called number, but before the system receives answer supervision.
- The system treats a # that the system receives from the calling party after the called party goes on-hook as a request to initiate a sequence call.
- A # that the system receives after an invalid number of digits causes an error condition.
- If the subscriber dials several #s, the system processes the first number.

Time-Outs: A basic interdigit time-out of 5 s applies to ACCS calls after the fourth digit. The system uses longer time-outs after natural breaks in a keying sequence, for example, after the entry of an NPA.

After a subscriber dials 0+, the switch applies OST. If OST is a tone, the subscriber has 5 s to dial the calling card number, or attach an operator. If OST

Exchange Alternate Billing Service (continued)

is a tone plus an announcement, the subscriber has 1 s to take action. If the subscriber does not take action, the system plays announcement 1. The system gives the subscriber an additional 5 s to dial or get an operator. If the subscriber fails to take action by the end of this period, the system attaches an operator to the call.

After the system receives four digits after an OST, interdigit timing of two seconds occurs. If the subscriber does not dial digits in this period, the system accepts that the subscriber dialed the PIN. The system performs a validation with the called number as the billing number and the four digits that the subscriber dials as the PIN. During validation, the subscriber has three more seconds to enter more digits. If the subscriber does not enter more digits, the system executes the action that the calling card number validation indicates.

Error Conditions: If the calling party makes a dialing error, announcement 6 informs the calling party of the error. Announcement 6 prompts the calling party to dial the called number again. The calling party has 3 seconds dial again. If the calling party does not dial again before the 3 seconds are up, the system plays announcement 7. The system plays this announcement to prompt the calling party to dial. The calling party has 5 s to enter the called number. If the calling party does not dial again in 5 s, the system plays the announcement 9 and terminates the call.

If the LIDB query is not successful, the system returns announcement 2 to the caller. Refer to the ACCS announcements table for a list of ACCS announcements. If the subscriber does not dial in 3 s, the system gives the ACCS alerting tone. The subscriber has 3 s to dial another calling card number before announcement 3 prompts the subscriber. After announcement 3, the subscriber has 5 s to dial again. The caller can have 3 more retries after the first failure. If on the fifth try the card number fails to pass the checks, the system plays announcement 4 and terminates the call. If one the 3 retries is successful, the system transmits the number and sends the thank you announcement to the caller.

The calling party can make six dialing errors during one sequence call attempt. When this event occurs, the system plays announcement 8 to the calling party and terminates the call.

When the calling party initiates a sequence call, the system counts an error count for the calling party. The system first sets the error count to zero. The error count increases by one when the subscriber makes a dialing error. When the error count reaches five, the system takes the call down. The subscriber can correctly dial the called number on one of the three retries. When this event occurs, the system sets the error count back to zero.

Exchange Alternate Billing Service (continued)

Interdigit Time-Outs: If the calling party begins to enter the called number and takes longer than 5 s between digits, an interdigit time-out occurs. This time-out results in an error condition. Refer to the previous description.

Invalid Digits: Invalid digits, like an asterisk, constitute an invalid dialing sequence and result in an error condition.

Unexpected Digits: The system does not expect digits to arrive while an announcement plays. If digits do arrive during a prompt announcement (announcements 1-4 and 5-7), the system terminates the announcement and processes the digits. The system ignores digits that arrive during termination announcements 8, 9, and 15.

Disconnects and Flashes: Disconnects terminate a call. The system does not ignore the following flashes:

- After the switch applies an OST, a switch hook flash connects the subscriber to an operator.
- If the subscriber enters 0 and flashes, the subscriber reaches an operator.

Collect Service

In Collect Service, the calling party requests that the operator class charge the called party for the call. After the operator class charges the call (station or person called), the system sends a BNS query to the LIDB. If the BNS query is successful, the BNS query returns one of the following indications:

- Verify each collect call to the number.
- The telephone company cannot bill collect calls to the number at the request of a customer.
- The telephone company cannot bill collect calls to the number because of service denial.
- Accept each intra-LATA collect call to the number without verification. Reject each Inter-LATA collect call to the number.
- Accept each intra-LATA collect call to the number without verification. Verify each inter-LATA collect call to the number.
- Accept collect calls without verification.

Third Number Billing Service

In Third Number Billing Service, the calling party requests that the operator class charge the call to a number. The number can be a number that the subscriber does not call or a calling number.

Exchange Alternate Billing Service (continued)

In the past, the operator had to verify the third number billing (policy varies among Operating Companies) before the completion of a call. With the LIDB, the Operating Company can indicate the following information for a given number.

- Third number billed calls cannot proceed to the third number at the request of a customer.
- Third number billed calls cannot proceed to the third number because of service denial.
- Every third number billed call can proceed to the number.
- Secure acceptance for each third number billed call to the number.
- The system accepts each third number billed intra-LATA call and rejects every inter-LATA call.
- The system accepts each third number billed intra-LATA call and secures acceptance for every inter-LATA call.

The LIDB can respond in four ways:

- Accept - If third number billing can proceed to the number, ACC appears at the CRT.
- Blocked - If the system blocks third number billing, the third number flashes at the CRT.
- Verify - If a response does not occur (i.e., ACC does not appear and the third number does not flash), the operator must verify the number. If the operator must verify the billed number, the operator enters the digits. The operator connects to the billed number and obtains verbal acceptance of charges to that number.
- Attach operator - This value is used when a need to route the call to a LIVE OPERATOR as a result of a CCV or BNS query failing occurs. On display to the operator, QRYFL appears in the information area of the Special Number field for TOPS IV. The QRYFL can also appear in the Application Message Area II field for TOPS MP. This indicates to the operator that the call was presented as a result of processing table ACCSERR after database validation failed (the database returned something other than an indicator that the billed number was valid). The operator may then decide and take the appropriate action once the call is presented (this includes floating the call).

Terminating Inward Service

The Operator-Assisted Manual Inward Validation feature allows an operator to assist another operator at a distant office. The assisting operator helps the Distant Operator handle an ACCS call that requires assistance in verification.

Exchange Alternate Billing Service (continued)

Offices that do not have CCIS or CCS7 require help to verify calling card calls.

The name manual means that the Distant Operator must give the number to the assisting operator verbally for validation.

To reach the assisting operator, the Distant Operator dials 1160 which follows a routing code.

As with other inward validation calls, translations must be arranged in the TOPS office to use the TOPS table. The translations must be arranged in the TOPS office to route calls to an Operator Position.

When the call reaches the assisting Operator Position, the assisting operator requests the 14-digit calling card number from the Distant Operator. The assisting operator enters the 14-digit calling card number, which sends a query to the LIDB.

The assisting operator verbally notifies the Distant Operator of the result of the validation attempt. If the number is invalid, the Distant Operator checks with the subscriber. The Distant Operator attempts to obtain another number for the assisting operator to verify. When the two operators complete the task, the assisting operator releases the call. The trunk idles normally when the Distant Operator releases the call.

The MANUAL option is available in the CCVPARMS table. This option allows the operating company to indicate if a CCN requires a manual (inward) validation.

When the call comes in, the system accesses the CCVPARMS table. The system accesses this table to determine if the CCN is in the LIDB or BVC. The system also accesses this table if manual validation of the CCN is required.

The TOPS_ACCS_MANUAL_VALIDATION parameter allows the Operating Company to determine the route of a call. The system can route subscriber-dialed calling card calls from public and/or private telephones to an operator for manual validation of the CCN.

The TOPS_ACCS_MANUAL_VALIDATION parameter has two possible values: ALL and PUBLIC. If the parameter is set to PUBLIC, calling card calls from public telephones proceed to the operator for inward validation. If the parameter is set to ALL, every calling card call, from public and private telephones, proceed to the operator for inward validation. The default value for this parameter is PUBLIC.

Exchange Alternate Billing Service (continued)

The operator recognizes a subscriber-dialed calling card call as a call that requires inward validation. The entire billing number, that precedes VFY appears on the CRT.

Calling Card Validation (CCV)

The Calling Card Verification (CCV) service allows subscriber-dialed or operator-handled calls to access the LIDB. Each query contains a billing number, PIN, calling number, and called number.

The calling card number is a 14-digit number that consists of a 10-digit billing number and a 4-digit PIN. The billing number is normally the directory number (NPA-NXX-XXXX). The billing number can also be a special non-directory number (RAO-(0/1)XX-XXXX). The RAO is the Revenue Accounting Office that assigns the number. The fourth digit distinguishes the two forms of billing numbers. The PIN is of the form NXXX, where N cannot be 0 or 1, and X can be a value between 0 and 9.

If the calling card number that the operator enters does not conform to the formats before, the system rejects the card. In other occurrences, the system validates the card through a direct signaling query to the LIDB. The reply from the LIDB indicates if the calling card is acceptable. The validation status appears on the operator screen. If the CCN flashes, the system rejects the CNN. If a change does not occur, the system accepts the CCN. If the system does not accept billing, the operator can enter a calling card number again for validation and display. The call cannot complete until an acceptable calling card number or an alternate billing class is entered.

Billed Number Screening (BNS)

The system performs Billed Number Screening (BNS) service for collect service, and for third number billing. Collect service is where the called party agrees to pay for a call. Third number billing is where the customer can charge calls to a number other than the calling or called number. Each BNS query contains a billing number, a calling number, and a called number.

CCV and BNS queries that fail

The CCV and BNS queries fail if one of the following conditions is present:

- A database overload condition is present (see note).

  - Error code = TIMEOUT

- The links to the database are down.

  - Error code = TIMEOUT

- An attempt to access the database does not occur.

  - Error code = TIMEOUT

- A component format error, a component ID error, or a parameter error occurs.

  - Error code = TIMEOUT

- A database time-out condition is present.

  - Error code = TIMEOUT

- The system returns an unexpected data value.

  - Error code = UNEXPECTED DATA VALUE

- The requested data is not available.

  - Error code = DATA UNAVAILABLE , VACANT GROUP, or NON-PARTICIPATING GROUP

- Network resources are not available.

  - Error code = UNAVAILABLE NETWORK RESOURCE

- Missing customer record, misrouted, or missing group record.

  - Error code = MISSING CUSTOMER RECORD, MISROUTED, or MISSING GROUP

Note: The AF1251, Automatic Call Gapping, provides the ability to control the rate at which the ACCS application sends requests to the LIDB. The ACCS application sends these requests during a database overload condition. See Automatic Call Gapping for details.

Automatic Call Gapping

The AF1251 provides network management functions to reduce the amount of query data that the ACCS application sends. The ACCS sends these requests during an LIDB overload condition. When the LIDB overloads, the ACCS application is informed. The Automatic Call Gapping (ACG) message instructs the application to reduce traffic. The ACG specifies the rate at which the system must release queries to the LIDB for a given NPA-NXX. The ACG gives the rate in gap intervals. Gap intervals mark the time between next releases of the queries from the application to the LIDB.

The ACG ability for BNS and CCV responses, that AF1251 provides, contains four functional areas. These areas are:

- Receipt and interpretation of the ACG message
- Control initiation
- Control activation
- Control deactivation

Exchange Alternate Billing Service (continued)

Descriptions of each area appear in the following pages.

Receipt and interpretation of the ACG message

When an LIDB overload condition is present, the LIDB sends an ACG indication. The ACG indication is in the message that the system sends in response to a query from the ACCS application. During normal operation, when an overload condition is not present, the response does not contain an ACG indication.

During an overload condition, the LIDB returns the first six digits of the service key as the code in the ACG. The first six digits are normally the NPA-NXX. If the system uses a special billing number for calling card queries, the service key is in the form of RAO-0/1XX.

The DMS maintains a control list. This list keeps track of the insertion and deletion of each six-digit code when an overload condition occurs and clears. The control list can hold a maximum of 1024 NPA-NXXs. To search the control list of this size, a hashing function is used. This hashing function requires the use of an target table to randomize the function as much as possible.

The TOPS_ACCS_ACG_SIZE parameter allows the Operating Company to change the default size of the target table. If the control list gets filled and queries are not blocked as they must be, the initial setting can increase. The BNSNOACG and CCVNOACG OM registers indicate when the size of the target table needs to be changed.

The ACG contains the six-digit code, a control interval (gap) index, and a control duration index. The control interval index indicates the severity of the control that the DMS must implement in response to the ACG. The higher the value, the more severe the control (range of value is from 0 to 15). The DMS uses this index to determine the gap (in seconds) that must be allowed before the DMS initiates the next query to that NPA-NXX. The control interval range appears in the following figure. The control duration index can be one of 13 discrete values. The control duration indicates the maximum amount of time that the control must remain in effect. The DMS uses this index to determine the number of seconds that this duration requires. The control duration index also appears in the following figure.

ACG control interval range and control duration index

Control gap interval range		Control duration index	
Gap level	Gap interval in seconds	Duration level	Duration in seconds
0	0	1	1
1	3	2	2
2	4	3	4
3	6	4	8
4	8	5	16
5	11	6	32
6	16	7	64
7	22	8	128
8	30	9	256
9	42	10	512
10	58	11	1024
11	81	12	2048
12	112	13	infinity
13	156		
14	217		
15	300		

The system applies ACG control to LIDB overload condition.

Control Initiation

When the DMS receives an ACG, the six-digit code (NPA-NXX) is entered on the control list. The system does not assume that the code was sent at an earlier time. The receipt of an ACG causes the system to initiate control.

When the code is entered on the control list, the DMS sets (and starts) a gap timer. The DMS sets the gap timer to a value that the DMS chooses without sequence from a standard distribution. The value varies from 90 to 110% of the gap interval in the ACG. Randomization of the gap interval resolves the race condition. This condition occurs when several Service Control Points (SCP) take code gapping against the same code. This random selection occurs when the gap timer is reset. At the same time that the gap interval timer is set, the DMS sets (and starts) a duration timer to the control duration value. The new control specifies the control duration value.

An ACG can request control for a code that is already under control. When this event occurs, the DMS replaces the current control with the new control. The timer function is reset to the values that the new control specifies.

Exchange Alternate Billing Service (continued)

Control Activation

From the start to the finish time of the gap interval timer, the DMS blocks the queries for a given code on the control list. The DMS does not allow the system to send the queries to the LIDB. The gap interval timer is reset to a new random value. The timer is reset to start another blocking period for queries for that code. This cycle continues until the duration timer expires. When the gap interval timer expires, the system releases the next query for that code to the LIDB. The response to a query can contain an ACG for the code released. When this event occurs, the gap interval timer and duration timer are reset and restarted. The timers are reset with the values from the new ACG. The response message contains the new ACG.

If the links to the LIDB are down, the system cannot return call gapping messages. The system maintains the codes on the control list as if the links were up.

The TOPS_ACCS_ACG parameter allows the Operating Company to turns ACG gapping control on or off.

When the system sends a query, the response to that query is one of the following: These responses are the normal conditions that are currently present.

- denial
- verification
- automatic acceptance of billed number

Calls for which the system blocks queries appear as normal verifies. For CCV queries, the way in which the system handles calls depends on the TOPS_ACC_CCV_QUERY_BLK parameter (through BCS33). This parameter allows the system to block calls or treat the calls as normal verifies. In BCS34, table ACCSERR, field MISCERR provides that function.

Affect of System Restart on ACG Control: If a reload or a cold restart occurs, the system removes the controls from the control list. If a warm restart occurs, the controls remain on the control list.

A restart is not required when the TOPS_ACCS_ACG parameter changes. The change for this parameter is immediate. Every control remains on the control list until expiration.

If the TOPS_ACCS_ACG_SIZE parameter changes, a reload or a cold restart is required. A reload or cold restart must occur so that a target table of a different size can be allocated.

Exchange Alternate Billing Service (continued)

Control Deactivation

When the DMS sends a query to the LIDB for a code that is on the control list, the system returns a response. The DMS sends a query because the gap interval timer expires. If the response does not contain an ACG, the removal of the code from the control list deactivates the ACG control. Removal of the code occurs even if the duration timer does not expire. This action guarantees that a code does not remain on the control list for a long time.

Manual Override of LIDB DENY

Normally the system cannot route a call that has billing denied through the LIDB. The system cannot route a call until an acceptable form of billing is keyed in at the TOPS. The DMS allows manual override of a DENY response from the LIDB. A special keying sequence for use in emergency conditions initiates this function. The operator can hit the ST key and let the call complete. This is design purpose not a translations or software problem.

NC0342 - Enhanced error processing (BCS34)

This ability provides the following abilities:

- better error code handling
- flexibility in routing and verification of LIDB queries
- additional information in LIDB responses
- better control of LIDB queries

Error handling prior to BCS34:

Before BCS34 (before this package), three parameters are available. These parameters allow the Operating Company to specify the treatment of calls whose CCV or BNS query fail. These parameters are:

- TOPS_ACCS_CCV_QUERY_BLK (valid through BCS33)
- TOPS_ACCS_BNS_VFY (valid through BCS33)
- TOPS_ACCS_BNS_BLK (valid through BCS33)

The TOPS_ACCS_CCV_QUERY_BLK parameter specifies the treatment of a call where the CCV query fails. The CCV fails because of the first five conditions in the previous list. The setting of this parameter determines if the system blocks or allows calls to complete normally as invalid calls.

When a CCV query fails because of the UNEXPECTED DATA VALUE RETURNED=PIN mismatch, the system blocks the call. For other occurrences of an unexpected data value, the TOPS_ACCS_CCV_QUERY_BLK parameter specifies how the system must handle this call.

Exchange Alternate Billing Service (continued)

A CCV query can fail because data requested is not available or no network resources are available. When a CCV query fails because of these two conditions, the TOPS_ACCS_CCV_QUERY_BLK parameter cannot control the call. The system blocks the call with invalid calling card number as a reason.

When a CCV query fails because of a missing customer record, misrouted or missing group condition the system blocks the call.

When a BNS query fails because of an unexpected data value error the system does not block the call.

A BNS query can fail because data requested is not available or no network resources are available. When a BNS query fails, the TOPS_ACCS_BNS_VFY parameter determines if the call must complete normally or receive empty treatment.

A BNS query can fail because of a missing customer record, misrouted or missing group condition. When a BNS query fails, the TOPS_ACCS_BNS_BLK parameter determines if the call can complete or if the system must block the call.

Error handling in BCS34:

In BCS34 (this package), the above parameters change in the following way:

- TOPS_ACCS_CCV_QUERY_BLK

  This parameter applies to SDB queries, not LIDB queries. For LIDB queries, refer to tables ACCSERR, BNSPARMS, and CCVPARMS.

- TOPS_ACCS_BNS_VFY

  The system deletes this parameter. Tables ACCSERR, BNSPARMS, and CCVPARMS replace this function.

- TOPS_ACCS_BNS_BLK

  The system deletes this parameter. Tables ACCSERR, BNSPARMS, and CCVPARMS replace this function.

The datafill sequence for new and changed tables appears in the following figure.

Exchange Alternate Billing Service (continued)

Datafill sequence for new and changed tables

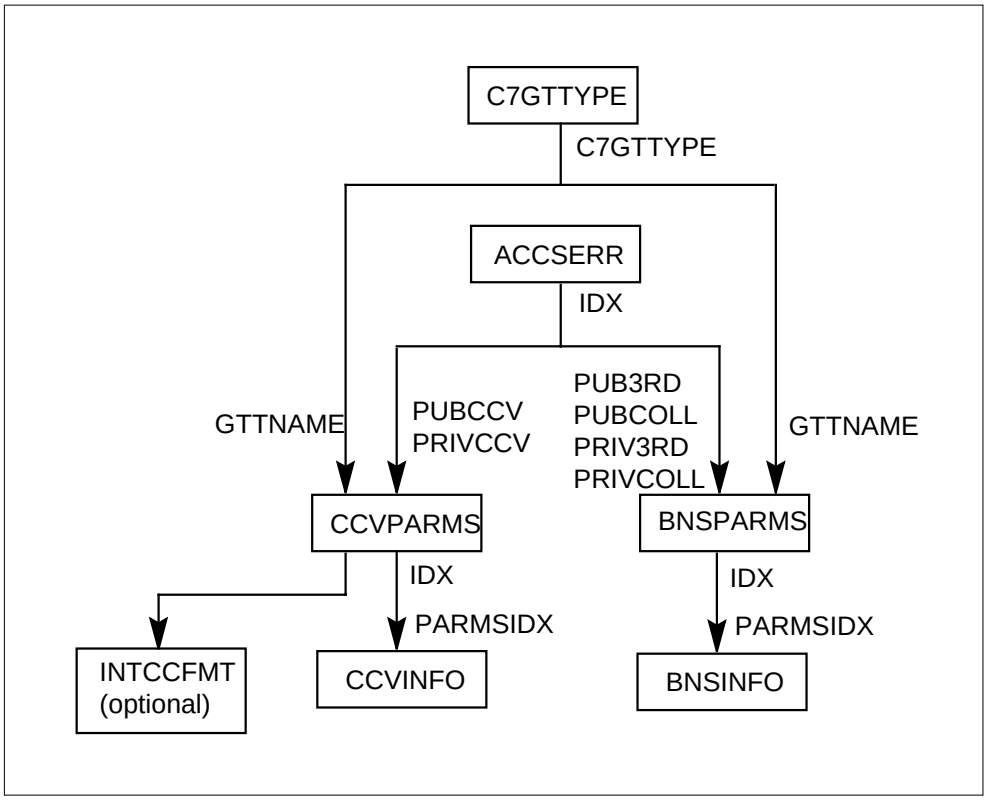

The following tables are the changed and new tables:

Table INTCCFMT (changed)

The system moves fields CLDNUM, SEQQRY, TIMEOUT, QRYBLK, and GTTNAME from table INTCCFMT to table CCVPARMS. Field CLDNUM is renamed field CLDREQ. The functionality that was in table INTCCFMT before is split between tables INTCCFMT and table CCVPARMS. The system moves the parameter fields to CCVPARMS. The fields that define the format of the expanded calling card remain in table INTCCFMT.

Example datafill for table INTCCFMT

```
ISSUERID  ACCIDSIZ  PINSIZE  VAL14DIG
-----------------------------------
 891222      11       4         Y
8933345       6       4         Y
 891223      15       4         N
8911487      16       4         N
```

Exchange Alternate Billing Service (continued)

Table CCVINFO (new)

The system uses this table for CCV queries. The system indexes this table with 14-digit (NPA-NXX or RAO-0/1XX) and CCITT calling card numbers. This table contains an index to table CCVPARMS. A given calling card does not always have a match in this table. When this event occurs, the system uses tuple 0 (the default tuple) in table CCVPARMS.

Example datafill for table CCVINFO

```
CCVDIGS     PARMSIDX
--------------------
212220        254
891222         3
891333         0
8915555        1
 9194         254
919555        254
```

Table CCVPARMS (new)

The system uses this table for CCV queries. This table provides an index to table ACCSERR for public and private telephones. This index gives the operating company the ability to react in a different way (to the same error codes) for public and private telephones. The system moves fields GTTNAME, CLDREQ (before field CLDNUM in table INTCCFMT), TIMEOUT, and SEQQRY here from table INTCCFMT. The functions that these fields (parameters) provide are available for CCITT and 14-digit (NPA-NXX or RAO-0/1XX) calling cards. The functions are available for 14-digit calling cards because table CCVINFO is the index to table CCVPARMS. Field CLDREQ allows optional inclusion of the called number for CCV, LIDB queries. Field GTTNAME provides Global Title Translations for CCV, LIDB queries. Field TIMEOUT provides the ability to set the TIMEOUT value for CCV, LIDB queries. Tuple 0 of this table is a default tuple. The system uses this tuple when a given calling card does not have a match in table CCVINFO.

Note: A telephone is considered a private telephone if the call class is station. For other classes (for example, hotel, restricted, coin), the phone is considered a public phone.

Example datafill for table CCVPARMS

```
IDX  GTTNAME  CLDREQ  TIMEOUT  SEQQRY  PUBCCV
PRIVCCV
-------------------------------------------------
 0   ACCSGT     Y       2        Y       2        3
 1   ACCS3GT    N       2        Y       2        3
 2   ACCS2GT    Y       3        N       0        1
 3   ACCS5GT    Y       2        Y       0        1
254  ACCS4GT    N       2        Y       2        2
```

Table BNSINFO (new)

The system uses this table for BNS queries. The NPA-NXX indexes the table. This table contains an index to table BNSPARMS. A given billed number does not always have a match in this table. When this event occurs, the system uses tuple 0 (the default tuple) in table BNSPARMS.

Example datafill for table BNSINFO

```
BNSDIGS     PARMSIDX
-------------------
212220         1
 2024          2
919220         1
919555         2
202555         2
```

Table BNSPARMS (new)

The system uses this table for BNS queries. This table provides an index to new table ACCSERR for public and private telephones. This index gives the operating company the ability to react in a different way (to the same error codes) for public and private telephones. The functionality that fields GTTNAME and TIMEOUT provide are available for BNS queries. Field GTTNAME provides Global Title Translations for BNS, LIDB queries. Field TIMEOUT provides the ability to set the TIMEOUT value for BNS, LIDB queries. This functionality can be specified for each NPA-NXX. Tuple 0 of this table is a default tuple. The system uses this tuple when a given billed number does not have a match in table BNSINFO.

Exchange Alternate Billing Service (continued)

Example datafill for table BNSPARMS

```
IDX  GTTNAME  TIMEOUT PUBCOLL PRIVCOLL PUB3RD
PRIV3RD
-------------------------------------------------
 0   ACCSGT     3       2       2       0        1
 1   ACCS3GT    2       2       3       1        2
 2   ACCS2GT    2       2       3       0        2
```

Table ACCSERR (new)

The system can index this table BNS and CCV queries. The index allows the Operating Company to enter the desired reaction when the company receives something other than a normal/successful message. The Operating Company receives the message in response to an LIDB query. A normal/successful message contains an error message or no message. These reactions include:

- BLOCK - The Operating Company denies the call with this billing. The system performs a reprompt as a result of this BLOCK. The action that the system takes depends on the environment from which the query occurs. If the environment is AABS, datafill in the VSN and the specified application of the VSN determines the action to take.
- ACCEPT - The system allows the call. The system treats the call as if the LIDB response indicates that the billing number accepts the billing. The billing number accepts the billing even when the validation fails. The ACC appears as information that describes the Special Number to indicate the billing is ACCEPTED.
- VERIFY - Verification of acceptance from the billed party is required. The verification can be by a live operator or by AABS. The system must not use this value for CCV queries. Verify does not make sense for CCV queries. The system must use verify for BNS queries. If the system use verify for a BNS query, the reaction is considered ATTACH OPERATOR.
- ATTACH OPERATOR - The system uses this value when the system routes the call to a LIVE OPERATOR. The system routes the call to a LIVE OPERATOR when a CCV or BNS query fails. On display to the operator, QRYFL appears in the information area of the Special Number field for TOPS IV. The QRYFL can also appear in the Application Message Area II field for TOPS MP. This value indicates that the call appears as a result of processing table ACCSERR after database validation failed. This means that the database returns something other than an indication that the billed number is valid. The operator can decide to take the appropriate action when the call appears. The operator can float the call.

Exchange Alternate Billing Service (continued)

MAP example for table ACCSERR

```
IDX  1  2  3  4  5  6  7  8  9  10 11 12 13 14 15 16 17 18
-------------------------------------------------------------
 0   A  B  A  A  A  A   B  A  B  B  A  B  A  O  A  O  O  O
 1   B  A  A  B  B  A   A  A  A  A  B  B  O  A  A  O  O  O
 2   A  A  B  B  B  A   A  B  A  A  B  O  A  A  A  O  O  O
 3   B  B  A  V  A  A   B  B  V  V  B  V  B  V  V  O  V  V
 4   B  B  A  V  A  A   B  B  V  V  B  V  B  V  V  O  O  V
 5   A  A  B  B  B  A   A  B  A  A  B  O  A  A  A  O  A  O

where:
          1  = NOXLSPAD
          2  = UNEQUSER
          3  = NETFAIL
          4  = NETCONG
          5  = SUBSFAIL
          6  = SUBSCONG
          7  = NOXLADDR
          8  = PROTPROB
          9  = UNEXDATA
          10 = UNAVNETR
          11 = MISSREC
          12 = SCRNRESP
          13 = MISROUTE
          14 = MISSGR
          15 = VACANTGR
          16 = NONPARGR
          17 = TIMEOUT
          18 = MISCERR

            A = ACCEPT
            V = VERIFY
            O = ATTACH OPERATOR
            B = BLOCK (with possible reprompt)
```

The following descriptions define the error codes in table ACCSERR:

- NOXLSPAD - A translation is not available for this specific address: The translating entity at the STP does not have an entry in the translation table for this Global Title.
- UNEQUSER - Unequipped User: Occurs as a result of corrupt addressing information in the Called Party Address parameter of the query message.
- NETFAIL - Network Failure: Failure of the CCS7 network
- NETCONG - Network Congestion: Congestion of the CCS7 network.

Exchange Alternate Billing Service (continued)

- SUBFAIL - Subsystem Failure: Failure of the LIDB node
- SUBCONG - Subsystem Congestion: Congestion of the LIDB node
- NOXLADDR - A translation is not available for an address of this nature: A serious SCCP-layer operational problem in the OSS or in an STP.
- PROTPROB - Protocol Problem: The format of query message that the OSS sends does not follow protocol.
- UNEXDATA - Unexpected data value: When the system returns this error code with a PIN (message TYPE1, No PIN Match), this error code indicates a PIN mismatch. If the system returns this error code in message Application Error Message, the error code indicates incorrect data element contents.
- UNAVNETR - Unavailable network resource: The LIDB cannot process a particular query request (for example, LIDB processes CCV queries, but not BNS queries).
- MISSREC - Missing customer record: The line number or special billing number required to process this query is not in the LIDB. For example, the NPA-NXX has working line numbers, but not this specified line number.
- SCRNRESP - Screened response: The OSS is not authorized to access the requested data.
- MISROUTE - Misrouted: The BVD receives a query request for information outside the domain. A check of the table of card issuers that the table supports determines this error.
- MISSGRP - Missing group: The LIDB receives a query request for information outside the domain. A check of the table of card issuers that the table supports determines this error. The application of the LIDB determines if the error is MISSGRP or MISROUTE.
- VACANTGR - Vacant group. LIDB and BVD: A part of a purported billed number cannot have associated correct individual account numbers.
- NONPARGR - Non-participating group: The calling, called, or purported billed number can belong to the domain of a Non-Bell Exchange Carrier. This carrier does not participate in LIDB-based services. The BVD does not generate this error.
- TIMEOUT - Time-out: The DMS does not receive a response before timer T1 expires. The DMS does not receive the response because of a failure or a long delay in the signaling network (an SCCP error). The DMS does not receive the response because of a failure in the target LIDB (a TCAP error).
- MISCERR - Miscellaneous Error: The system generates a miscellaneous error. The generation of this error has two conditions. The first condition

is that call gapping is ON. The second condition is that activity at the LIDB exceeds the rate that call gapping parameters reject.

Error code processing

The new tables, from the previous descriptions, provide the operating company with the datafillable ability to react to failed validation queries. The action that operating company personnel take can be different for each error code that the system returns in the LIDB response.

Table ACCSERR contains fields for each possible error code that the system returns as a result of failed LIDB queries. This table allows the operating company to specify a given action to take when a failure occurs. The operating company can elect to: allow the call (ACCEPT), verify before a call can proceed (VERIFY), and attach a live operator (ATTACH OPERATOR). The Operating company can also block the call (BLOCK). An action can be specified for each error code, except for the actions that personnel take for other error codes.

For each NPA-NXX and RAO-0/1XX, the system can select a different tuple in table ACCSERR for the following queries:

- BNS Third Number billed queries from public telephones
- BNS Third Number billed queries from private telephones
- BNS Collect billed queries from public telephones
- BNS Collect billed queries from private telephones
- CCV queries from public telephones
- CCV queries from private telephones

Fields PUB3RD, PRIV3RD, PUBCOLL, PRIVCOLL, PUBCCV, and PRIVCCV of tables BNSPARMS and CCVPARMS provide this ability.

The action specified in table ACCSERR must occur before other actions that current datafill and office parameters specify.

ACCEPT, VERIFY, ATTACH OPERATOR, BLOCK - with possible reprompt

The result of the action specified in table ACCSERR can depend on the environment from which the query originates. The environment where the query can originate are AABS, ACCS, or from an Operator Position. This section discusses the different items that can be entered in table ACCSERR. This section also discusses the result of the specification of each item. This communication describes these elements for CCV and BNS queries in each of the three environments from which a query can originate. The appropriate OM

Exchange Alternate Billing Service (continued)

increases each time. The specified action, in table ACCSERR, does not affect if a failed query occurs when a failure occurs.

- CCV query from AABS
  - — ACCEPT - The system allows the call. The system treats the call as if the LIDB response indicates that the billing number accepts the billing. The billing number accepts the billing even when the validation fails.
  - — VERIFY - Does not apply for CCV queries. If VERIFY is entered for a CCV query, the system treats VERIFY as ATTACH OPERATOR.
  - — ATTACH OPERATOR - The VSN must present the call to a live operator for appropriate interruption. On display to the operator, QRYFL appears in the information area of the Special Number field for TOPS IV. The QRYFL can also appear in the Application Message Area II field for TOPS MP. This message indicates that the call is presented. The call is presented as a result of processing table ACCSERR after the billed number fails to validate at the LIDB. The operator takes action according to operating company procedure.
  - — BLOCK - When BLOCK is entered in table ACCSERR, datafill in the VSN controls the action that results. Possible actions that the VSN takes include:
    - – reprompt for the CCAN
    - – disconnect treatment
    - – treatment that routes the caller to an operator, and transfers the caller to an operator
    - – reprompt for new billing option
- Third Number query from AABS
  - — ACCEPT - The system allows the call. The system treats the call as if the LIDB response indicates that the billing number accepts the billing. The billing number accepts the billing even when the validation fails.
  - — VERIFY - The AABS contacts the third party to verify that the system accepts the charges.
  - — ATTACH OPERATOR - The system directs the VSN to present the call to a live operator for appropriate interruption. On display to the operator, QRYFL appears in the information area of the Special Number field for TOPS IV. The QRYFL also appears in the Application Message Area II field for TOPS MP. The QRYFL indicates to the operator that the call appears as a result of processing table ACCSERR. The call appears after the billed number fails to

validate at the LIDB. The operator takes action that follows the operating company procedure.

— BLOCK - When BLOCK is entered in table ACCSERR, datafill in the VSN controls the action that results. The action occurs on a given VSN. Possible actions that the VSN can take include:

– reprompt for the Third number

– disconnect treatment

– treatment that routes the caller to an operator, and transfers the caller to an operator.

– reprompt for new billing option

- Collect query from AABS

— ACCEPT - The system allows the call. The system treats the call as if the LIDB response indicates that the billing number accepts the billing. The billing number accepts the call even when the validation fails.

— VERIFY - The AABS contacts the collect party to verify that charges are accepted.

— ATTACH OPERATOR - The VSN must present the call to a live operator for appropriate interruption. On display to the operator, QRYFL appears in the information area of the Special Number field for TOPS IV. The QRYFL also appears in the Application Message Area II field for TOPS MP. The QRYFL indicates to the operator that the call is presented. The call is presented as a result of processing table ACCSERR after the billed number fails to validate at the LIDB. The operator takes action according to operating Company procedure.

— BLOCK - When BLOCK is entered in table ACCSERR, datafill in the VSN controls the action that results, for the particular VSN. Possible actions that the VSN can take include:

– reprompt for the Collect number

– disconnect treatment

– treatment that routes the caller to an operator, and transfers the caller to an operator.

– reprompt for new billing option

Exchange Alternate Billing Service (continued)

- CCV query from ACCS
  - — ACCEPT - The system allows this call. The system treats the call as if the LIDB response that the billing number accepts the billing. The billing number accepts the billing even when the validation fails.
  - — VERIFY - Does not apply for CCV queries. If VERIFY is entered for a CCV query, VERIFY is treated as ATTACH OPERATOR.
  - — ATTACH OPERATOR - Treatment indicates operator interruption occurs and the call is presented to an operator for appropriate interruption. On display to the operator, QRYFL appears in the information area of the Special Number field for TOPS IV. The QRYFL can also appear in the Application Message Area II field for TOPS MP. This message indicates to the operator that the call is presented. The call is presented as a result of processing table ACCSERR after the billed number fails to validate at the LIDB. The operator takes action according to operating company procedure.
  - — BLOCK - The system prompts the subscriber for the CCAN again. Three reprompts occur, if the query fails each time. After three reprompts (four failed attempts), the system applies disconnect treatment.
- Third Number query from ACCS - The ACCS does not handle this query.
- Collect query from ACCS - The ACCS does not handle this query.
- CCV query from Operator Position
  - — ACCEPT - The system allows the call. The system treats the call as if the LIDB response indicates that the billing number accepts the billing. The billing number accepts the billing even when the validation fails.
  - — VERIFY - Does not apply for CCV queries. If VERIFY is entered for a CCV query, the system treats VERIFY as ATTACH OPERATOR.
  - — ATTACH OPERATOR - The call is already at position. The QRYFL appears in the information area of the Special Number field for TOPS IV. The QRYFL can also appear in the Application Message Area II field for TOPS MP. This message indicates to the operator that the call is presented as a result of processing table ACCSERR. The call is presented after the billed number fails to validate at the LIDB. The operator takes action according to operating company procedure.
  - — BLOCK - The system formats and flashes the Special Number, which indicates the calling card is not valid. The calling card is marked as invalid. The operator takes action according to operating company procedure. The likely options include a reprompt for the Calling Card Account Number (CCAN) or prompt for a new billing option. The operator cannot float the call.

Exchange Alternate Billing Service (continued)

- Third Number query from Operator Position
  - — ACCEPT - The system allows the call. The system treats the call as if the LIDB response indicates that the billing number accepts the billing. The billing number accepts the billing even when the validation fails. The ACC appears as information that describes the Special Number, to indicate the call is ACCEPTED.
  - — VERIFY - For verification, an indication does not appear on the display. The ACC does not appear and the system does not flash the Special Number (Third Number). The operator must verify the charges.
  - — ATTACH OPERATOR - The call is at position. The QRYFL appears in the information area of the Special Number field for TOPS IV. The QRYFL can also appear in the Application Message Area II field for TOPS MP. This indicates to the operator that the call is presented as a result of processing table ACCSERR. The call is presented after the billed number fails to validate at the LIDB. The operator takes action according to operating company procedure.
  - — BLOCK - The system formats and flashes the Special Number (Third Number), (for TOPS 4). The invalid class charge ICON can appear (for TOPS MP). These indicators indicate the calling card is not valid. The calling card is marked as invalid. The operator takes action according to operating company procedure. The possible options include a reprompt for the billed number or prompt for a new billing option. The operator cannot float the call.
- Collect query from Operator Position
  - — ACCEPT - The system allows the call. The system treats the call as if the LIDB response indicates that the billing number accepts the billing. The billing number accepts the call even when the validation failed. The ACC appears as information that describes the Special Number, to indicate the billing is ACCEPTED.
  - — VERIFY - The operator verifies that the billed party accepts the charges. The operator verifies the charges manually or through AABS handoff.
  - — ATTACH OPERATOR - The call is at position. The QRYFL appears in the information area of the Special Number field for TOPS IV. The QRYFL can also appear in the Application Message Area II field for TOPS MP. These indicators indicate to the operator that the call is presented as a result of processing table ACCSERR. The call is

Exchange Alternate Billing Service (continued)

presented after the billed number fails to validate at the LIDB. The operator takes action according to operating company procedure.

— BLOCK - The system flashes the COL of the STA COL display (for TOPS4). The invalid class charge ICON can appear (for TOPS MP). These indicators indicate that the Collect number is not valid. The calling card is marked as invalid. The operator takes action according to operating company procedure. The operator cannot float the call.

Greater routing flexibility - GTTNAME

This feature provides the ability to specify a different Global Title Translation Name (GTTNAME) for:

- each NPA-NXX or RAO-0/1XX entered in table CCVINFO
- 14-digit calling cards and for each NPA-NXX entered in table BNSINFO
- billed numbers

In the past, every 14-digit calling card and every billed number used the same Global Title Translations Name.

In the past, this ability was available for CCITT calling cards in optional package Expanded Calling Card Format SS7, ABS00101, - CCS7 Format. The ability was available through table INTCCFMT (field GTNAME). This feature maintains this ability for CCITT calling cards. This feature maintains the ability even when the system moves field GTNAME from table INTCCFMT to CCVPARMS.

CLD number required - for 14-digit LIDB queries.

Before this feature, the inclusion of the called number in the query was optional. The the datafill in table INTCCFMT, field CLDNUM determined the inclusion of the number for each card issuer. This ability was not available for 14-digit calling cards.

This feature extends the called number required - before query ability to 14-digit Calling Cards calls. The inclusion of the called number in the query is optional. The datafill in table CCVPARMS, field CLDREQ determines the inclusion of the called number. If the called number is non-nil, the called numbers consist of the first 10 digits of the number. If the called number is less than 10 digits (for example, N11), the called number is justified and padded on the right with zeroes in the called number parameter. The system truncates called numbers greater than 10 digits (for example, some international numbers) on the right to 10 digits.

Table CCVPARMS can require that the called number must be present in the query. If the called number must be present, the software goes to a waiting

state until the operator enters the called number. An operator does not enter a directory assistance number (e.g., 411 or 555-1212) as a forward number. This action applies to Toll and Assist (TA) calls.

The called number is available for most calls that TOPS handles. In the DMS, calls can occur in which the called digits are not available. The called digits cannot be available when the system sends a query to a billing validation database. These calls include:

- Operator handled directory assistance (DA) calls
- Inwards validation calls

The called number required parameter applies to subscriber originated TA calls. For other call types, the system sends a query as soon as possible. This action occurs when a calling card number is present and the call is correctly class charged.

Field CLDREQ of table CCVPARMS provides optional inclusion of the CLD number in a calling card query for each card issuer. The 14-digit and CCITT calling cards can be entered in table CCVINFO, which provides an index for CCVPARMS. Inclusion of the CLD number can be specified for 14-digit calling cards and for CCITT calling cards.

TIMEOUT

Before this feature, the following tables controlled the TIMEOUT value for LIDB queries:

- For CCITT calling card queries - table INTCCFMT, field TIMEOUT
- Other queries - table OFCENG, office parameter ACCS_QUERY_TIMEOUT

This feature provides an ability to set the TIMEOUT for each NPA-NXX or RAO-0/1XX for 14-digit calling cards. This feature also provides the ability to set the TIMEOUT for each NPA-NXX for billed numbers. Field TIMEOUT in tables CCVPARMS and BNSPARMST provides this ability. The tables follow the same logic as in the previous description for field GTTNAME to provide the ability. This ability becomes more useful when queries that the system routes to different LIDBs require different turnaround times.

SEQQRY

Before this feature, the following tables controlled if the system launched a new query for each sequence call:

- For CCITT calling card queries - table INTCCFMT, field SEQQRY
- Other queries - table OFCVAR, office parameter MCCS_SEQ_QUERY

Exchange Alternate Billing Service (continued)

This feature provides an ability to control if a new query is or is not launched for each sequence call made. These calls are on an NPA-NXX (or RAO-0/1XX) basis for 14-digit calling cards. Field SEQQRY in table CCVPARMS provides this ability, following the same logic as given above for field GTTNAME.

The MCCS_SEQ_QUERY does not apply to CCS7queries. Field SEQQRY now handles this function. Parameter MCCS_SEQ_QUERY continues to applies to CCS6 network queries. When this parameter is set to Y, a new query is launched for each call of a sequence call. When set to N, the system launches a first query.

Billing

Refer to billing section.

Example 1 - CCITT calling card validation

This example demonstrates how the new tables are used for the validation of CCITT Calling Card Account Number 891222-99999999999-3333.

Datafill from the tables at the beginning of this feature section appears in this example.

- Assume the subscriber, calling from a hotel, enters CCAN 891222-99999999999-3333 when AABs prompts the subscriber for his/her calling card number.
- After preliminary processing, the DMS, searches table CCVINFO for 891222.
- After the match occurs, field IDX (3) of that tuple (3) is used to access table CCVPARMS.
- Field CLDREQ is set to Y in this tuple of table CCVPARMS. The system must have the called number before the system launches the validation query.
- The GTTNAME (ACCS5GT) is used in the Global Title Translations, to determine the STP to which the system sends the query.
- The system launches the query to the appropriate STP.
- The STP uses ACCS5GT and 891222 to determine the LIDB to which the system sends the query.
- Assume the query fails validation at the LIDB. Assume that an error code of missing customer record is assigned to field ERROR CODE of the response message.

- The DMS waits for the response message (for a maximum of 3 s, because field TIMEOUT in table CCVPARMS is 3). Assume that the DMS receives the response before the 3 s expire.
- TOPS analyzes the response message to obtain the result of the the validation attempt. The response contains an error of “missing customer record."
- The subscriber makes the call from a public phone. The PUBCCV (0) is used to access table ACCSERR.
- In table ACCSERR, tuple 0, the system accesses the value of field MISSREC to determine how to react to the failure. Field MISSREC has a value of ACC (Accept).
- The AABS completes the call as if the validation was successful.

Example 2 - 14-digit calling card validation

This example demonstrates the use of the new tables for the validation of Calling Card Account Number (CCAN) 919 555 1212 1212.

Datafill from the tables at the beginning of this feature section appears in this example.

- Assume the subscriber calls from home and enters CCAN 919 555 1212 1212. The subscriber enters this number when the AABS prompts for his/her calling card number.
- After preliminary processing, the DMS, searches table CCVINFO for 919 555.
- After the match is found, field IDX of that tuple (254) is used to access table CCVPARMS.
- Field CLDREQ is set to N in this tuple of table CCVPARMS. The system does not require the called number before the system launches the validation query.
- The GTTNAME (ACCS4GT) is used in the Global Title Translations, to determine the STP to which the system sends the query.
- The system launches the query to the appropriate STP.
- The STP uses ACCS4GT and 919555 to determine the LIDB to which the system must send the query.
- Assume the query fails validation at the LIDB. Assume that an error code of vacant group is assigned to field ERROR CODE of the response message.

Exchange Alternate Billing Service (continued)

- The DMS waits for the response message, for a maximum of 2 s, because field TIMEOUT in table CCVPARMS is 2. Assume that the DMS receives the response before the 2 s expire.
- The system analyzes the response message to obtain the result of the the validation attempt. The response message contains an error of “vacant group."
- The subscriber makes the call from a private phone. The PRIVCCV (4) is used to access table ACCSERR.
- In table ACCSERR, tuple 4, the system accesses the value of field VACANTGR to determine how to react to the failure. Field VACANTGR has a value of Attach Operator.
- The AABS offloads the call to a live operator. To offload the call, the AABS sends a message to the VSN. The message is Validation Result DID, with VALIDATION CONCLUSION=MANUAL VALIDATION REQUIRED. The VSN transfers the call to a live operator for processing. On presentation, QRYFL appears on the screen. The QRYFL indicates that the call is presented as a result of processing table ACCSERR. The call is presented after the billed number fails to validate at the LIDB.

Example 3 - Billed number validation

This example demonstrates the use of new tables for the validation of a Third number (202 444 1212).

Datafill from the tables at the beginning of this feature section appears in this example.

- Assume the subscriber, that calls from a coin telephone, makes a 0+ call and bills the call to a Third Number, 202 444 1212.
- After preliminary processing, the DMS, searches table BNSINFO for 202 444 (or parts of)
- After the system finds a match, field IDX of that tuple (2) is used to access table BNSPARMS. Number 2024 is a match, because the index to this table is a digilator.
- The GTTNAME (ACCS2GT) is used in the Global Title Translations, to determine the STP to which the system sends the query.
- The system launches the query to the STP.
- The STP uses ACCS2GT 202444 to determine the LIDB to which the STP must route the query. Assume an error occurs at the STP. The STP assigns field diagnostic, of the response message, a value of unequipped user.

- The DMS waits for the response message to a maximum of 2 s, because field TIMEOUT of table BNSPARMS is 2. Assume that the DMS receives the response before the 2 s expire.
- The system analyzes the response message to obtain the result of the the validation attempt. The query fails at the SCP or STP, with a reason of unequipped user.
- Table BNSPARMS provides indexes to table ACCSERR. The subscriber makes the call from a public phone. The telephone company bills the call to a Third number. The index in field PUB3RD (0) is used to access table ACCSERR.
- In table ACCSERR, tuple 0, the system accesses the value of field UNEQUSER to determine how to react to the failure. Field UNEQUSER has a value of block, so the system blocks the call.

The system blocks the call because of a failed LIDB query. The actions that follow depend on the environment from which the query occurs:

- FROM POSITION - the system flashes the special number field (which contains the Third Number), to indicate a validation failure. The operator can prompt for a new billing option. The same action takes place for Calling Card queries.
- FROM ACCS - Does not apply to BNS queries. If the BNS is a CCV Query, the system prompts the subscriber for the number again to a maximum of three reprompts. This action occurs if the subscriber does not enter the number in the correct way.
- FROM AABS - datafill in the VSN and the specified application of the VSN determine the action to take. The system can prompt the subscriber again for the Third Number. The system prompts the subscriber to change the billing method (to collect or calling card). If the subscriber does not change the billing method the call can be presented to an operator for handling. The system can also route the call to disconnect treatment. The same action occurs for Calling Card validation.

Example 4 - No matching NPA in table BNSINFO

This example demonstrates the use of the default tuple from table BNSPARMS when the NPA-NXX does not have a match. An example does not appear. Tables CCVINFO and CCVPARMS have the same design, for the use of the default tuple.

Exchange Alternate Billing Service (continued)

Datafill from the tables at the beginning of this feature section appears in this example.

- Assume that the subscriber, that places the call from home, makes a collect call to 919-333-1212.
- After preliminary processing, the DMS, searches table BNSINFO for 919 333.
- The number 919333 is not entered in table BNSINFO and the system uses the default tuple (0) to access table BNSPARMS.
- The system uses GTTNAME (ACCGT, from table BNSPARMS, tuple 0) in the Global Title Translations, to determine the STP to which the system sends the query.
- The system launches the query to the STP.
- The STP uses ACCSGT and 919333 to determine the LIDB to which the system routes the query. The system routes the query to the appropriate LIDB.
- Assume that the system processes the validation and sends a normal success response to the DMS, through the STP.
- The DMS waits for the response message for a maximum of 3 s, because field TIMEOUT of table BNSPARMS is 3. Assume that for some reason, the successful response message does not get back to the DMS in the 3 s from query launch. A TIMEOUT error occurs. Possible reasons include heavy traffic, slow processing or a lost message.
- The subscriber makes the call from a private telephone. The subscriber bills the call as Collect. The system uses the PRIVCOLL (2) to access table ACCSERR.
- In table ACCSERR, tuple 2, the system accesses the value of field TIMEOUT to determine how to react to the failure. Field TIMEOUT has a value of Verify.
- The system must obtain verification that the Collect party accepts charges. The environment from which the system launches the query determines the next action:
  - — FROM a POSITION - The system formats and displays the CLD number (ACC does not appear). These actions indicate that the system must obtain verification. The operator verifies acceptance of billing with the CLD party and takes appropriate action.
  - — FROM ACCS - Does not apply for Collect calls.
  - — FROM AABS - The AABS performs the verification of billing acceptance with the Collect party and takes appropriate action.

Exchange Alternate Billing Service (continued)

BK08865 - Calling Card Screening Enhancements (BCS36)

This PRSDOC provides the ability to prevent call completion. The system prevents calls when a subscriber attempts to complete a call on one interexchange carrier (IEC) with a calling card. The calling card is restricted to another IEC.

Background

Before this PRSDOC, the Operating Company did not have the ability to perform carrier related calling card screening. This type of screening is required to block call completion of specified IEC calls. Screening blocks calls that the subscriber bills to a calling card. The card is restricted from one or more carriers.

Independent Operating Companies (IOC) complete intra-LATA and inter-LATA operator calls. The companies complete Local Exchange Carrier (LEC) calls and IEC calls for IEC companies. A number of these calls are calling card calls. To complete calling card calls, the system collects the calling card number from the calling subscriber. To validate the calling card number, the system launches a query. The system uses Signaling System 7 (SS7) to launch a query in the nationwide Line Information Database (LIDB) system.

The introduction of Card Issuer Identifier cards (CIID) causes problems for the IOCs. These cards are used to bill an IEC call that completes for an IEC other than the issuing card company. The company that issues the cards can refuse to accept billing for these calls. The same problems occur for specified issued CCITT calling cards and LEC calling cards.

To prevent loss of revenue, the IOCs turn off automatic validation of every CIID card for LEC and IEC calls. Calls that subscribers make with these cards are connect to an operator.

The call can be an IEC call and the carrier is not an allowed carrier. When this event occurs, the call cannot be complete through the calling card/carrier group. If the call is an LEC call, the operator manually validates the card.

Overview

Now, manual validation is used to satisfy the current limit of blocking calls on one IEC. The operator uses a calling card restricted to another IEC to validate the card. When the operator uses manual validation, AWT increases. Expenses for the Operating Company increase. To address this problem, the PRSDOC performs automatic calling card/carrier screening before call completion. Calling card/carrier screening occurs before the validation of the calling card . Screening occurs when the calling and called numbers are

Exchange Alternate Billing Service (continued)

known. In other occurrences, calling card/carrier screening occurs when the calling and called numbers become known. For example, an operator validates a calling card before calling and called number are known. When calling and called number become known, the system performs calling card/carrier screening. The operator must not validate the calling card again before the operator floats the call. To provide this new functionality, the system modifies table CCVINFO and creates table CARRSCRN.

Datafill tables

Datafill order is OCCINFO, CARRSCRN, and CCVINFO.

- Table OCCINFO (change does not occur)

  Enter data in this table with separate carriers used in new table CARRSCRN, field CARRLIST.

- Table CCVINFO (modified)

  The system adds new field CARRIDX as an index to new table CARRSCRN. The range is 0-62. The system uses table CCVINFO for CCV queries. This table is in the index with one of the following calling card formats: RAO, CIID, CCITT or directory number format. Field PARMSIDX is an index to table CCVPARMS. Sample datafill appears in the following example.

Example datafill for table CCVINFO

```
CCVDIGS  PARMSIDX  CARRIDX
-------------------------
212220     254        0
677001     55         2
677101     253        2
834001     6          0
836001     254        62
891999     3          0
891288     4          2
891333     1          3
9194       254        0
919781     250        1
```

If a given calling card number does not have a match in this table, the system does not perform calling card/carrier screening. The call can complete.

Table CARRSCRN (new)

New table CARRSCRN provides calling card/carrier screening. This table indicates which carriers can complete an IEC call billed to a specified calling

card. In this table, data is entered in permitted carriers against indexes of calling cards. The fields appear in the following list.

- IDX - A key to this table that table CCVINFO, field CARRIDX defines. The range is 0-62.
- PERMIT - Indicates if ALL, NONE or SOME carriers can complete an IEC call.
- CARRLIST - A list of a maximum of 16 4-digit carriers that can complete a call if the system uses field PERMIT=SOME. In other occurrences, the system does not use this field. Table OCCINFO must predefine the carriers.

Sample datafill appears in the following example.

Example datafill for table CARRSCRN

```
IDX   PERMIT   CARRLIST
-----------------------
0     ALL
1     NONE
2     SOME     0288
3     SOME     0333
62    SOME     0333,0555
```

The system cannot alter or remove the first two tuples, which are defaults.

Automated calling card validation enhancement

A 14-digit calling card (RAO or DN) or CCITT calling card can be collected. When this event occurs, the operator takes the following steps (a group of new and current steps) to validate the card. For additional information, refer to Expanded Calling Card SS7, ABS00101.

1. (current) The subscriber enters a calling card number. The system checks the number for format. If the number does not conform to one of the formats (RAO, CIID, CCITT, or Directory Number Format), the system rejects the card.
2. (current) If the format checks pass, the system checks the calling card against table HOTLIST for a match. Table HOTLIST is used to record special numbers that are HOT (i.e., used for fraud or classified as incorrect). This table acts as a local cache. If a match is available, the system prompts the subscriber to enter the calling card again. Validation begins again. If a match is not available, validation continues.
3. (current) The system checks the calling card against table CCVINFO. The system uses this table CCV queries. This table contains an index to

Exchange Alternate Billing Service (continued)

table CCVPARMS and an index to new table CARRSCRN. If a match is not available in modified table CCVINFO, calling card/carrier restrictions do not apply. The system checks table CCVPARMS in step 4.

a. (new) If a match is available in table CCVINFO and the call is an IEC call, the system checks table CARRSCRN. The system checks this table for calling card/carrier restrictions.

b. (new) If a carrier restriction is noted, the system compares the carrier of the card to the serving carrier on the call. If a match is available, validation continues in step 4. If a match is not available, the system transfers the call to an operator for processing.

c. (new) On call arrival at the Operator Position, RESIC appears on the screen of the operator. The RESIC indicates that the call is presented as a result of incompatibility between the permitted carriers, and the serving carrier on the call. Table CARRSCRN specifies the incompatibility. The system does not accept billing. The operator performs one of the following practices:

- Change Billing Type
- Change Calling Card
- Change Carriers
- Transfer to specified carriers operator
- Cancel Call
- Reenter calling card (Not very common)

The validation process cannot continue until an appropriate calling card/carrier match is available. The validation process can also continue when billing changes to collect or third party billing.

4. (current) The system checks the calling card against table CCVPARMS for a match. Table CCVPARMS specifies which database to send a calling card validation or billed number screening query.

   If a match current, the query type can be LIDB, BVC, SDB, MANUAL, or BLK. If a match is not available, the query type is accepted to be LIDB.

5. (current) Table CCVPARMS is checked. This table provides query launching information and an index into table ACCSERR. Table ACCSERR allows datafill of the desired reaction when the system receives something other than a normal/successful response message from an LIDB.

6. (current) The system launches a validation query to the appropriate database.
7. (current) If the database response indicates a valid calling card, the call completes. In other occurrences, the system prompts the subscriber to enter the calling card again, and validation begins again. The call cannot complete until the subscriber enters an acceptable calling card number or an alternate billing class.

Operator assisted calling card validation enhancement

A 14-digit calling card (RAO or DN) or CCITT calling card is collected. When this event occurs, the operator takes the following steps (a group of new and current steps) to validate the card. See Expanded Calling Card Format SS7, ABS00101, for additional information.

1. (current) The system checks the calling card number that the subscriber enters for format. If the number does not conform to one of the formats in the appendix, the system rejects the card.
2. (current) If the format checks pass, the system checks the calling card against table HOTLIST for a match. The system uses table HOTLIST to record special numbers that are considered HOT (for example, used for fraud or classified as invalid). This table acts as a local cache. If a match is available, the system prompts the subscriber to enter the calling card again. Validation begins again. If a match is not available, validation continues.
3. (current) The system checks the calling card against table CCVINFO. The system uses this table for CCV queries. This table contains an index to table CCVPARMS and an index to table CARRSCRN. If a match is not available in table CCVINFO calling card/carrier restrictions do not apply. The system checks table CCVPARMS in step 4.
    a. (new) Two conditions can arise. In the first condition, a match is available in table CCVINFO and the call is not an IEC call or carrier number is not present. The system does not perform calling card/carrier checks. Go to step 4. In the second condition, a match is available in table CCVINFO and the call is an IEC call. The system checks table CARRSCRN for calling card/carrier restrictions.
    b. (new) If a carrier restriction is noted, the system compares the carrier of the card to the serving carrier on the call. If a match is available, validation continues in step 4.
    c. (new) If a match is not available, the screen of the operator displays RESIC. This display which indicates that the call is presented as a result of incompatibility. The incompatibility is between the permitted carriers, as table CARRSCRN specifies, and the serving

Exchange Alternate Billing Service (continued)

carrier on the call. Billing is not accepted. The operator performs one of the following practices:

- Change Billing Type (Collect, 3rd, etc.)
- Change Calling Card
- Change Carriers
- Transfer to specified carriers operator
- Cancel Call
- Reenter calling card (Not very common)

The call cannot complete until the system finds an appropriate calling card/carrier match or billing changes to collect or third.

4. (current) The system checks the calling card against table CCVPARMS for a match. Table CCVPARMS specifies which database a calling card validation or billed number to send the screening query.

   If a match is available, the query type can be LIDB, BVC, SDB, MANUAL, or BLK. If a match is not available, the query type is accepted to be LIDB.

5. (current) The system checks table CCVPARMS. This table provides query launching information and an index to table ACCSERR. Table ACCSERR allows the entry of the desired reaction when the system receives something other than a normal/successful message from an LIDB response.

6. (current) A system launches a validation query to the appropriate database.

7. (current) If the database response indicates a correct calling card and the system performs carrier screening (an IEC call) the call completes. If the system does not perform carrier screening as required, the system performs screening before call completion. In other occurrences, the operator follows specified operator practices to respond. An IEC call cannot complete until the operator verifies an acceptable calling card number or an alternate billing class. The call cannot complete until calling card/carrier screening passes.

Re-validation due to operator interruption

Descriptions of calling card re-validations examples (calling card/carrier screening), that occur because of operator interruption, appear in the following list:

- How to change a calling card number. If the operator enters a different calling card number than the number entered before, the carrier restrictions

can change. The system allows or does not allow the new carrier to complete the call. The operator must validate the new card again.

- How to change the called number. If the operator enters a new called number, the call can become a carrier or a non-carrier call. If the call becomes a non-carrier call, calling card/carrier restrictions do not apply. Validation continues. If the call becomes a carrier call, the calling card/carrier restrictions can apply. Validation begins again.
- How to change the carrier. If the operator changes the carrier, the system must compare the new carrier against the carrier restrictions of the calling card. Validation process begins again. A call can toggle between served and no-served. For example, when the operator changes carriers for an IEC call, the call can become no-served or served. The calling card/carrier checks apply if the IEC call is served. If the IEC call is no-served, the operator transfers the call to the operator of the carrier for completion.
- How to change billing type: If the subscriber changes billing type to a calling card, the operator must validate the calling card again.

Changes seen by subscriber

The system checks calling card/carrier restrictions before the system launches a CCV query to the LIDB for served IEC calls. The subscriber sees changes in the ACCS/MCCS and AABS automated systems.

ACCS/MCCS: The changes in the ACCS/MCCS automated system appear in the following process steps:

1. (current) The subscriber enters the calling card number in response to a bong tone or a recorded announcement.
2. (new) The system performs calling card screening on IEC calls. If the card fails to validate because of carrier restrictions, the system transfers the call to an operator without warning. If the card passes carrier restrictions and validates, the system launches a CCV query to continue calling card validation.
3. (current) The system launches a CCV query to the LIDB for validation.

If the card fails to validate, the system tells the subscriber, The card number you entered is invalid; try your card again or dial 0 for another form of billing. The system prompts the subscriber again several times. On the last prompt, the system tells the subscriber, The card number you entered is not valid, hang up, dial 0 plus the number you are calling for operator assistance. If the card validates, the system connects the call and bills the call to the calling card.

First, if the subscriber does not enter the calling card number, the system transfers the subscriber to an operator, without warning.

Exchange Alternate Billing Service (continued)

The subscriber can elect to dial 0 from ACCS/MCCS before the subscriber enters the calling card number. In this occurrence, the system transfers the subscriber to an operator, without warning.

AABS: The changes in the AABS automated system appear in the following process steps:

1. (current) The subscriber enters the calling card number in response to a bong tone and a recorded announcement.
2. (new) The system performs Calling Card Screening on IEC calls. If the card fails to validate because of carrier restrictions, the system transfers the call to an operator with a warning. If the card passes carrier restrictions and validates, the system launches a CCV query to continue calling card validation.
3. (current) The system launches a CCV query to the LIDB for validation.

If the card fails to validate, the system tells the subscriber, The card number you entered is invalid; try your card again or dial 0 for another form of billing. The system prompts the subscriber again several times. On the last prompt, the system tells the subscriber, The card number you entered is not correct, hang up, dial 0 plus the number you are calling for operator assistance. If the card validates, the system connects the call and bills the call to the calling card.

First, if the subscriber does not enter the calling card number, the system transfers the subscriber to an operator with a warning message.

The subscriber can elect to dial 0 from AABS before the subscriber enters the calling card number. In this occurrence, the system transfers the subscriber to an operator with a warning message.

Examples for an automated system with the calling and called numbers present prior to calling card validation

This section presents examples that demonstrate use of the calling card screening tables. These examples refer to previous sample datafill for tables CCVINFO and CARRSCRN.

Example 1 - No restrictions: This condition applies when a specified calling card does not have restrictions on which a carrier completes the call. A 0 is entered in the CARRIDX field in table CCVINFO.

1. Caller enters card # 891999-99999999999-3333 when the system prompts the subscriber for his/her calling card number by AABS or MCCS/ACCS.
2. After preliminary processing, the DMS searches table CCVINFO and finds a match with 891999. The CARRIDX has a value of 0.

3. If the call is an IEC call, the system can access table CARRSCRN. The number 0 is entered in the CARRIDX field of table CCVINFO and the system accesses tuple 0. If the call is not an IEC call, the system does not perform calling card/carrier screening.
4. Tuple 0 indicates the selected card is corect for billing all IEC calls. Restrictions do not apply. Calling card validation continues and the system accesses table CCVPARMS.
5. After the operator validates the calling card, the call is complete.

Example 2 - Every carrier restricted: This condition applies when a subscriber bills a call to a card that cannot accept billing for an IEC call. Subscribers cannot bill carrier calls to these cards. The system does not allow IEC calls, that use this type of calling card for billing. A 1 is entered in the CARRIDX field of table CCVINFO.

1. Caller enters card # 919-781-8252-6666 when AABS or MCCS/ACCS prompts the subscriber for the calling card number.
2. After preliminary processing, the DMS searches table CCVINFO and finds a match with 919781. The CARRIDX has a value of 1.
3. If the call is an IEC call, the system accesses table CARRSCRN. One (1) is entered in the CARRIDX field of table CCVINFO. The system accesses tuple 1. If the call is not an IEC call, the system does not perform calling card/carrier screening.
4. Tuple 1 indicates the selected card is not correct and cannot bill IEC calls.
5. This type of card is restricted for billing. The system transfers the call to an operator for processing. On display, RESIC appears on the screen of the operator. The RESIC indicates that the call is presented as a result of an incompatibility. The incompatibility is between the permitted carriers, as table CARRSCRN specifies, and the serving carrier on the call.
6. At an Operator Position, the system supports the following operator practices:
   - Change billing type: The operator can change the billing type. The operator validates the new billing type. The system performs a check for calling card/carrier restrictions. The system performs the check when the type of billing indicates that the subscriber bills a call to a

Exchange Alternate Billing Service (continued)

calling card. The system also performs the check when the call is an IEC call.

- Change calling card: The operator can change the type of calling card for billing, if the subscriber has another calling card. The operator validates the new calling card.
- Cancel the call: If the operator cannot validate an alternate form of billing, the operator terminates the call.
- Change carriers: The operator can change the carrier of the call. The system screens the new carrier.
- Transfer the call to the carrier: If the operator cannot validate billing, the operator can choose to transfer the call to the carrier for completion.
- Try calling card number again: The operator enters the calling card again if the subscriber did not enter the card. The operator validates the card again. The system supports this action. This action is not common.

Example 3 - One or more restrictions: applies when the subscriber bills a call to a card that can accept billing for specified IEC calls. The subscriber can bill specified carrier calls to these cards. A value that ranges from 2-62 is entered in the CARRIDX field in table CCVINFO.

1. Caller enters card # 891288-99999999999-3333 when AABS or MCCS/ACCS prompt the subscriber for the calling card number.
2. After preliminary processing, the DMS searches table CCVINFO and finds a match with 891288. The CARRIDX has a value of 2.
3. If the call is an IEC call, the system accesses table CARRSCRN. Two (2) is entered in the CARRIDX field of table CCVINFO, the system accesses tuple 2. If the call is not an IEC call, the system does not perform calling card/carrier screening.
4. The PERMIT field of tuple 2 indicates that some carriers can complete the IEC call.
5. The PERMIT field of tuple 2 is entered with SOME. Additional field CARRLIST is entered with the allowed carrier/carriers.
6. Field CARRLIST is entered with 0288. Carrier 0288 is the only carrier that can complete this IEC call.

7. The system compares the carrier to the serving carrier on the IEC call.
   a. If the carriers match, the system accesses table CCVPARMS to complete Calling Card Validation before the call completes.
   b. If the carriers do not match, the system transfers the call to an operator for processing. On display, RESIC (for the TOPS IV) and ResIC (for the TOPS MP) appear on the screen of the operator. The Restricted IC (default for the TOPS MPX) also appears on the screen of the operator. These messages indicate that the call is presented as a result of an incompatibility. The incompatibility is between the permitted carriers, as specified in table CARRSCRN, and the serving carrier on the call.
8. At an Operator Position, the system supports the following operator practices:
   - Change billing type
   - Change calling card
   - Change carriers
   - Cancel the call
   - Transfer the call to the carrier
   - Retry calling card number. The system supports this action but this action is not common.

Examples - Traversing the new table from Operator Position in which the calling and called number are not present prior to calling card validation.

This section presents examples that demonstrate use of the calling card screening tables. These examples refer to previous sample datafill for tables CCVINFO and CARRSCRN.

Example 1 - No restrictions: This condition applies when a calling card does not have restrictions on which carrier completes the call. A 0 is entered in the CARRIDX field in table CCVINFO.

1. Operator enters card # 891999-99999999999-3333 when the call arrives at the position. The subscriber requests that the call bill to the calling card. The calling and called number are not known.
2. After preliminary processing, the DMS searches table CCVINFO and finds a match with 891999. The CARRIDX has a value of 0.
3. If the following conditions are present, the system accesses table CARRSCRN. The conditions are the call is an IEC call, the carrier number is known, and the database query type is LIDB. Another condition is that the call is served. The system accesses this table because the calling

Exchange Alternate Billing Service (continued)

and called numbers are not present. This call can be a carrier call and the carrier number can be not present. This condition is not known. The system does not perform carrier screening at this point.

4. The operator validates the calling card.
5. Operator enters calling and called numbers.
6. The DMS searches table CCVINFO and finds a match with 891999. Field CARRIDX has a value of 0.
7. If the following conditions are present, the system accesses table CARRSCRN. The conditions are: the call is an IEC call, the carrier number is known, and the database query type is LIDB. Another condition is that the call is served. Calling and called number are present. The system performs carrier screening. Zero (0) is entered in the CARRIDX field of table CCVINFO. The system accesses tuple 0.
8. Tuple 0 indicates that the selected card is correct. The subscriber can use this card to bill every IEC call. Restrictions do not apply. The call completes.

Example 2 - Every carrier restricted. This condition applies when the subscriber bills a call to a card that cannot accept billing for an IEC call. The subscriber cannot bill carrier calls to these cards. The system does not allow IEC calls that use this type of calling card for billing. A 1 is entered in the CARRIDX field in table CCVINFO.

1. Operator enters card # 919-781-8252-6666 when the call arrives at the position. The subscriber requests that the telephone company bill the call to the calling card. The calling and called number are not known.
2. After preliminary processing, the DMS searches table CCVINFO and finds a match with 919781. Field CARRIDX has a value of 1.
3. If the following conditions are present, the system accesses table CARRSCRN. The conditions are: the call is an IEC call, the carrier number is known, and the database query type is LIDB. Another condition is that the call is served. The system accesses this table because the calling and called numbers are not present. This call can be a carrier call and the carrier number can be not present. This condition is not known. The system does not perform carrier screening at this point.
4. The operator validates the calling card.
5. The operator enters calling and called numbers.
6. The DMS searches table CCVINFO and finds a match with 919781. Field CARRIDX has a value of 1.

Exchange Alternate Billing Service (continued)

7. If the following conditions are present, the system accesses table CARRSCRN. The conditions are: the call is an IEC call, the carrier number is known, and the database query type is LIDB. Another condition is that the call is served. Calling and called number are present. The system performs carrier screening. One (1) is entered in the CARRIDX field of table CCVINFO. The system accesses tuple 1.
8. Tuple 1 indicates that the selected card is not correct for billing IEC calls.
9. This type of card is restricted for billing. The message RESIC (for the TOPS IV) and ResIC (for the TOPS MP) appear on the screen of the operator. The Restricted IC (for the TOPS MPX) also appears on the screen of the operator. These messages indicate that the call is presented as a result of an incompatibility. The incompatibility is between the permitted carriers, as specified in table CARRSCRN, and the serving carrier on the call.
10. The system supports the following operator practices:
    - Change billing type: The operator can change the billing type. The operator validates the new billing type. The system performs a check for calling card/carrier restrictions. The system performs the check when the type of billing indicates that billing is to a calling card. The system also performs the check when the call is an IEC call.
    - Change calling card: The operator can change the type of calling card used for billing. The operator can change the type of calling card if the subscriber has another calling card. The subscriber validates the new calling card.
    - Cancel the call: If the operator cannot validate an alternate form of billing, the operator terminates the call.
    - Change carriers: The operator can change the carrier of the call. The system screens the new carrier.
    - Transfer the call to the carrier: If the operator cannot validate billing, the operator can transfer the call to the carrier for completion.
    - Retry calling card number: The operator enters the calling card again if the subscriber does not enter the card correctly. The operator validates the card again. The system supports these actions. These actions are not common.

Example 3 - One or more restrictions. This condition applies when the subscriber bills a call to a card that can accept billing for specified IEC calls.

Exchange Alternate Billing Service (continued)

The subscriber can bill specified carrier calls to these cards. A value that ranges from 2-62 is entered in the CARRIDX field in table CCVINFO.

1. Operator enters card # 891288-99999999999-3333 when the call arrives at the position. The subscriber requests that the telephone company bill the call to the calling card. Thee calling and called number are not known.
2. After preliminary processing, the DMS searches table CCVINFO and finds a match with 891288. Field CARRIDX has a value of 2.
3. If the following conditions are present, the system accesses table CARRSCRN. These conditions are: the call is an IEC call, the carrier number is known, and the database query type is LIDB. Another condition is that the call is served. These conditions are present because the calling and called numbers are not present. A carrier call and the carrier number can be present. This condition is not known. The system does not perform carrier screening.
4. The operator validates the calling card.
5. Operator enters calling and called numbers.
6. The DMS searches table CCVINFO and finds a match with 891288. Field CARRIDX has a value of 2.
7. If the following conditions are present, the system accesses table CARRSCRN. The conditions are: the call is an IEC call, the carrier number is known, and the database query type is LIDB. Another condition is that the call is served. Calling and called number are present, the system performs carrier screening. Two (2) is entered in the CARRIDX field of table CCVINFO. The system accesses tuple 2.
8. The PERMIT field of tuple 2 indicates that some carriers can complete the IEC call.
9. The PERMIT field of tuple 2 is entered with SOME. An additional field CARRLIST is entered with the allowed carrier/carriers.
10. Field CARRLIST is entered with 0288. Carrier 0288 is the only carrier that can complete this IEC call.
11. The system compares the carrier to the serving carrier on the IEC call.
    a. If the carriers match, the call completes.
    b. If the carriers do not match, a message appears. Message RESIC (for the TOPS IV) and ResIC (for the TOPS MP) appear on the screen of the operator. The Restricted IC (for the TOPS MPX) also appears on the screen of the operator. This message indicates that the call is presented as a result of an incompatibility. The incompatibility is

between the permitted carriers, as specified in table CARRSCRN, and the serving carrier on the call.

12. The system supports the following operator practices:
    - Change billing type
    - Change calling card
    - Change carriers
    - Cancel the call
    - Transfer the call to the carrier
    - Retry calling card number. The system supports this practice. This practice is not common.

Calling card formats

The RAO, Directory number format, and CCITT formats appear in package Expanded Calling Card Format SS7, ABS00101. The CIID format appears in the following figure.

CIID calling card format

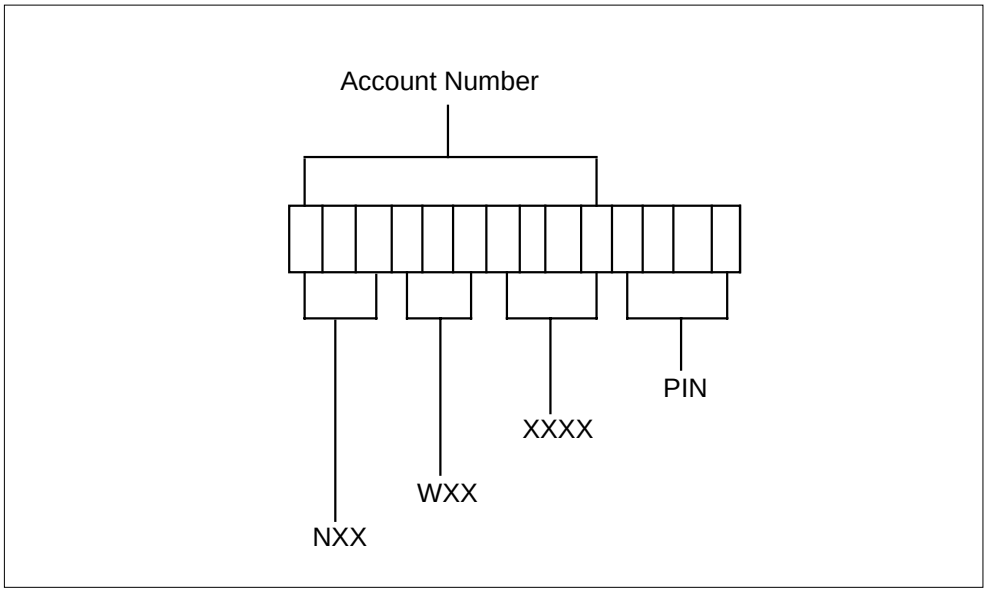

The CIID number format is a fixed length format 14 digits in length. The CIID has two important parts: the Account Number, and the PIN.

The Account Number is 10 digits in length and contains the following fields:

- NXXWXX - This field is a six digit code assigned to requesting interexchange carriers for use in 14-digit telecommunication cards. This

Exchange Alternate Billing Service (continued)

field is also called the Card Issuer Identifier, assigned by Bellcore. Code assignments first took place in the 8XXWXX and 9XXWXX series. The first digit ranges from 2 to 9, X ranges in value from 0 to 9, W is 0 or 1.

- XXXX - Customer Account Number, 4 digits in length, X ranges in value from 0 to 9. The card issuer assigns the Customer Account Number.

The PIN is a single field, 4 digits in length.

- PIN - Personal Identification Number, 4 digits in length, ranges in value from 2000 to 9999

Dump and restore

During dump and restore, the system copies the old BCS34 or BCS35 logical tuple to the new BCS36 logical tuple. The system initializes the new field CARRIDX value that appears in the new logical tuple, to 0. This value is the default meaning so ALL carriers can complete IEC calls. Calling card/carrier restrictions do not apply.

Table CCVINFO were not present before BCS34.

Interactions and limits: See the Interactions and Limits sections for additional information.

Translations table flow

Translations table flow is not available.

Limits

The following limits apply to Exchange Alternate Billing Service:

If EABS and TICS package are in the office, the system does not block calls for the carrier.

Package Expanded Calling Card Format SS7, ABS00101 - CCS7 Validation, requires this feature (NC0342).

Feature NC0342 is compatible with the Automated Alternate Billing Service, ABS00101, and TOPS Voice Service Node features.

BK08865 - Calling card screening enhancements (BCS36)

This PRSDOC applies when the billing type is a calling card and an LEC transports the call. The LEC completes an IEC call for a served carrier.

- No-served compared to served carrier: The calling card/carrier checks apply if the IEC call is a served call. The call can be no-served and the

operator transfers the IEC call to the operator of the carrier. This action means that the system does not perform alternate billing.

- Called party billing to a calling card: When a subscriber bills a call collect, the calling party picks the carrier. The calling party picks the carrier even when the called party pays for the call. The carrier is selected before the system makes a connection to the called party. If the called party chooses to bill the IEC call to the calling card, calling card/carrier checks apply. When the system makes a connection to the called party, carriers cannot change. This action is considered a limit to current operator practices. If calling card/carrier screening indicates that the calling card is not a correct card for billing, the operator must float the call. To float the call with appropriate billing, the operator must change billing from the restricted calling card. The operator can also terminate the call and connect again with a different carrier. The same issues apply for 3rd party billing.
- Sequence calls: When you perform sequence calls, set field SEQRY=Y in table CCVPARMS. This step makes sure that the system performs calling card/carrier screening for every sequence IEC call.
- ONI/ANIF calls: When a called and calling number are present for IEC calls, the system allows the connection between two parties. The system allows the connection even when billing is not satisfied. If the party decides to bill this call to a calling card that is carrier restricted, the operator must float the call. The float the call with appropriate billing, the operator must change billing from the restricted calling card. The operator can also terminate the call and connect again with a different carrier.
- Duplicate carriers in table CARRSCRN: Table CARRSCRN can contain a maximum of 16 carriers. These carriers do not have to be different. The Operating Company must enter data in these carriers separately.
- Applicable calling card types:
  - — Applicable: RAO/CIID, CCITT and DN format calling cards.
  - — Non-applicable: Overseas and Manual calling cards.
- CIID versus RAO: This PRSDOC treats CIID calling cards the same as RAO calling cards. The Operating Company determines the restrictions for these calling cards. The Operating Company must enter data in tables CCVINFO and CARRSCRN.
- HOT cards compared to RESIC cards: In the past, calling cards marked HOT had priority over other incorrect or restricted calling card states. This PRSDOC continues to give priority to calling cards marked HOT. If a calling card number is entered in tables HOTLIST and CCVINFO, the card is marked HOT. The operator screen displays HOT and the operator reserves the right to float the call. A calling card can be HOT and RESIC at the same time, but the Operating Company treats the card as HOT.

Exchange Alternate Billing Service (continued)

Interactions

Descriptions of the interactions between Exchange Alternate Billing Service and other functionalities appear in the following paragraphs.

If the Exchange Alternate Billing Service (EABS), ABS00101, and TOPS Inter-LATA Carrier Service (TICS), OSEA0101, packages are present in the office, the following interactions are present.

- The CCVPARMS table can indicate that the type of billing validation is BVC for a TICS-served carrier call. For this condition, the fields in the TOPEACAR table indicate if the system completes a query or if the operator must validate the call. The fields that indicate the appropriate action are:

  — CCVQUERY and CCVVAL for CCV queries

  — BNSQUERY and BNSVAL for third number billing queries

  — COLQUERY and COLVAL for collect billing queries

  These fields do not apply if the CCVPARMS table indicates an LIDB query.

- For calls for which the subscriber dials 0+ to a TICS-served carrier, the MCCS prompts the subscriber to enter a CCN. The subscriber must enter CCN if the TOPS office has MCCS. Before collection of the CCN, the type of billing validation query is not known. The type of query is not known because the CCVINFO table uses the billing number as the key to access table CCVPARMS. To decide if MCCS must collect the CCN, the system uses fields CCVQUERY and CCVVAL in the TOPEACAR table.

  The MMCS collects the call if the CCVQUERY field is set to NOQUERY. The MMCS also collects the call if the CCVQUERY field is set to QUERY and the CCVVAL field is set to N (No). The MMCS sends the LIDB or BVC query, and continues to handle the call. If the system sets these fields with other values, the call goes directly to an Operator Position.

NC0342 - Enhanced error processing (BCS34)

Feature NC0342 interacts with TOPS calls that use alternate billing. The alternate forms of billing are:

- TOPS Bellcore AMA, OSB00101
- Exchange Alternate Billing Service, ABS00101
- Exchange Alternate Billing Service Canada, ABS00101
- Expanded Calling Card Format SS7, ABS00101
- TOPS Extended BCAMA - EBAF, OSB00101

Exchange Alternate Billing Service (continued)

Impact to AWT

Before this feature, the ability to require the called number for CCITT cards before the launch of a query occurred through datafill. The launch of a query occurred through datafill in table INTCCFMT, field CLDNUM. This feature allows the ability to require the called number for 14-digit calling cards, through table CCVPARMS, field CLDREQ. This field can be set to Y(yes). When this event occurs, AWT can increase on calls where the query has a delay until the operator enters the called number. If the card issuer requires the called number in the query, the CLDREQ must not be set to N(o).

Field TIMEOUT in new tables CCVPARMS and BNSPARMS allows for greater granularity to set the TIMEOUT value. Without this feature, for 14-digit calling cards, the system set the TIMEOUT value for the office, through office parameter ACCS_QUERY_TIMEOUT. The system set the TIMEOUT value to the worst case value. This feature provides the ability to set the TIMEOUT value for each NPA-NXX or RAO-0/1XX. The feature provides this ability along with removal of the requirement to set the TIMEOUT to a worst case value. Different databases can be used for different NPA-NXXs. When this event occurs, the turnaround time between a query that the system sends and a response that the system receives can be different. The TIMEOUT value can be set to the appropriate value and not the worst case value. When this event occurs, the system can save the AWT if a TIMEOUT occurs.

BK08865 - Calling card screening enhancements (BCS36)

This PRSDOC is in EABS, ABS00101, and EABS Canada, ABS00101.. The TOPS Inter-LATA Carrier Service (TICS) package, OSEA0101, is required so that the package can determine if the call if a specified carrier serves the call. Modified table CCVINFO and EABS are in the package, but new table CARRSCRN is packaged with the TICS package.

Restrictions are added to the table control of table CCVINFO. If the TICS package is present, the restrictions allow the entry of an index in table CARRSCRN. The one index that can be in table CCVINFO and be the value of 0. If the system detects the value 0 in the CARRIDX field, the system does not access table CARRSCRN. Calling card/carrier restrictions do not apply and carriers can complete IEC calls. If TICS is present, but EABS is not, table CARRSCRN does not have meaning.

Impact to AWT

Before this activity, operators validated calling cards that billed IEC and LEC calls. This method increases AWT. This method increases expenses for the Operating Companies. This PRSDOC automates processing of these call, which reduces AWT.

Exchange Alternate Billing Service (continued)

Activation/deactivation by the end user

Exchange Alternate Billing Service does not require activation or deactivation by the end user.

Billing

NC0342 - Enhanced error processing (BCS34)

The system supports the ability Verify - with operator for LIDB (or BVD) queries of collect and third party billed numbers. This ability is present in the range of possible values for bytes 2-3 of table 286, module code 052 - Alternate Billing. In the past, TOPS did not support this ability.

The system produces TOPS Bellcore AMA records in EBAF Phases 1-2 for calls that launch an LIDB query.

The following figure is an example of an AMA record that the system generates for call code 015.

This record is for a Collect billed call that launches a validation query to the LIDB and receives a response of Verify - with operator. Notice that bytes 2 and 3 of the LIDB response table are set to 4 Verify - with operator. Although EBAF Phase 2 appears, EBAF Phase 1 is identical. The EBAF Phase 0 does not apply to this record.

Example AMA record with module 052 (Phase 1)
LIDB response of "Verify - with operator" (EBAF Phase 2)

```
HEX ID:AA  STRUCTURE CODE:40700C  CALL CODE:015C
SENSOR TYPE:036C  SENSOR ID:0000000C
REC OFFICE TYPE:036C REC OFFICE ID:0000000C
DATE:80217C  TIMING IND:00000C STUDY IND:0200000C
ANSWER:0C  SERVICE OBSERVED:0C OPER ACTION:0C
SERVICE FEATURE:000C ORIG NPA:613C
ORIG NUMBER:2391234C  OVERSEAS IND:1C
TERM NPA:00212C  TERM NUMBER:2208978C
CONNECT TIME:0427380C
ELAPSED TIME:000002360C OPERATOR NUMBER:1010100C
OPERATOR WORK TIME:000000270C  MODULE CODE:052C
BILLING TYPE ID:1C  FORMAT ID:2C
SIGNIFICANT DIGITS:010C
BILLABLE DIGITS 1:02122203512C
BILLABLE DIGITS 2:FFFFFFFFFF  RAO:301C
CALLING CARD SUBACCOUNT NUMBER:019C
BILLING NUMBER TREATMENT:FF  LIDB RESPONSE:404C
OSS ACTION:1C  MEANS OF INPUT/RESPONSE:113C
SEQUENCE CALL COUNTER:001C  MODULE CODE:000C
```

Exchange Alternate Billing Service (continued)

The verification with an operator appears in the following list.

- Set the query type in table CCVPARMS to LIDB so that the system makes the validation query for the call to the LIDB.
- Set tuple EBAF_PHASE in table TOPAMAOP to the appropriate phase (PHASE 1 or PHASE2).
- Make a TOPS Collect or Third number billed call where the billed number is entered in the LIDB as Verify - with operator.
- Launch a query to the LIDB to validate the billed number.
- Have the operator “verify acceptance of billing" with the billed party.
- Have the operator float the call.
- Have the parties go on hook.
- The AMA record appears with the LIDB response table. Refer to the previous description.

Station Message Detail Recording

Exchange Alternate Billing Service does not affect Station Message Detail Recording.

Datafilling office parameters

The following parameters must be entered.

If the query includes the Personal Identification Number (PIN), the system sends a calling card validation (CCV) query. If the query does not include the PIN, the system sends a billed number screening (BNS) request.

Exchange Alternate Billing Service (continued)

The office parameters that Exchange Alternate Billing Service uses appear in the following table. See *Office Parameters Reference Manual* for additional information about office parameters.

Office parameters by Exchange Alternate Billing Service

Table name	Parameter name	Description
OFCOPT	TOPS_MCCS_CCV	Offices with the Traffic Operator Position System (TOPS) and the Mechanized Calling Card Service (MCCS) require this parameter. The Automatic Calling Card Service (ACCS) feature also requires this parameter. This parameter allows calling card validation ability. TOPS_MCCS_CCV specifies if the operator applies MCCS or ACCS validation to TOPS operator-handled calling card billing. For the first installation, this parameter is set to N (No). Calling card validation occurs through format checks of the number or through operator-initiated inward validation. The parameter must be set to Y (Yes) if operators can handle MCCS or ACCS calling card validations. The default for this parameter is N, and activation is immediate.
OFCOPT	TOPS_MCCS_BNS	Offices with TOPS and MCCS or ACCS require this parameter. The TOPS_MCCS_BNS allows the billed number screening ability. TOPS_MCCS_BNS must be set to Y (Yes) if the office has the Billed Number Screening (BNS) feature. The default value for this parameter is N (No), and activation is immediate.

Exchange Alternate Billing Service (continued)

Office parameters by Exchange Alternate Billing Service

Table name	Parameter name	Description
OFCENG	TOPS_ACCS_MANUAL_VALIDATION	This parameter determines if the system brings subscriber-dialed ACCS calls that use a calling card numbers (CCN) to the operator for inward validation. This parameter also determines if the system brings calls from private stations to the operator. The possible values for this parameter are PUBLIC or ALL. If the parameter is set to ALL, the system brings subscriber-dialed MCCS calls to the operator for inward validation. If the parameter is set to PUBLIC, the system brings calls from public stations to the operator for inward validation. The default value for the TOPS_ACCS_MANUAL_VALIDATION parameter is PUBLIC. Activation of this parameter is immediate.
OFCENG	ACCS_MAX_QUERIES	This parameter specifies the number of outstanding queries that can be present at one time. The number of remaining queries depends on the number of Transaction IDs that can be used at one time for ACCS. The ACCS_MAX_QUERIES parameter must be equal to or less than the number of Transaction IDs. The minimum value of this parameter is 1, and the maximum value is 5000. The default is 150. Activation of this parameter requires a cold restart. The ACCS_MAX_QUERIES parameter requires a cold restart when changed.

Exchange Alternate Billing Service (continued)

Office parameters by Exchange Alternate Billing Service

Table name	Parameter name	Description
OFCENG	TOPS_ACCS_CCV_QUERY_BLK	This parameter specifies if a call must proceed as a normal call. This parameter also specifies if the system can block an incorrect calling card call with an announcement. TOPS_ACCS_CCV_QUERY_BLK is correct for BVC and LIDB queries through BCS34. In BCS34, this parameter is correct for SDB queries. For BVC and LIDB queries, see tables ACCSERR, BNSPARMS, and CCVPARMS. This parameter applies to subscriber-dialed CCV calls. The possible values for this parameter are Y (Yes) and N (No). The default is Y. If the parameter is set to Y, the system routes CCV calls that the system fails to block to an announcement. If the parameter is set to N, CCV calls that fail can proceed as a normal call without validation. Activation of TOPS_ACCS_CCV_QUERY_BLK is immediate.

Exchange Alternate Billing Service (continued)

Office parameters by Exchange Alternate Billing Service

Table name	Parameter name	Description
OFCENG	TOPS_ACCS_BNS_BLK	This parameter allows the Operating Company to specify if the system must deny or verify a call when the LIDB returns a “missing customer record" indication. This parameter applies to BNS queries (without PIN). This parameter is deleted in BCS34. Tables ACCSERR, BNSPARMS, and CCVPARMS take over the function of this parameter. The possible values for this parameter are Y (Yes) and N (No). If the LIDB returns a “missing customer record" indication on a BNS query, the system checks this parameter. If the parameter is set to Y, the call receives vacant treatment. If the parameter is set to N, the call can proceed (i.e., call requires verification). The default value for the TOPS_ACCS_BNS_BLK parameter is N.

Exchange Alternate Billing Service (continued)

Office parameters by Exchange Alternate Billing Service

Table name	Parameter name	Description
OFCENG	TOPS_ACCS_BNS_VFY	This parameter allows the operating company to specify if the system must deny or verify a call when the LIDB returns the following indications: • Unavailable Network Resource • Data Unavailable. If the LIDB returns a “unavailable network resource" or a “data unavailable" indication, the system checks this parameter. If the parameter is set to Y (Yes), the call requires verification. If the parameter is set to N (No), the call receives vacant treatment. This parameter applies to BNS queries (without PIN). The default value for the TOPS_ACCS_BNS_VFY parameter is N. This parameter is deleted in BCS34. Tables ACCSERR, BNSPARMS, and CCVPARMS take over the function of this parameter.
OFCENG	ACCS_QUERY_TIMEOUT	This parameter specifies the time-out (allowed time) value, in seconds, for an LIDB query. This value is normally set to 2 s. The LIDB can require more time. Use this parameter when the LIDB two-second requirement cannot be met. The minimum value for this parameter is 0 and the maximum is 255. The default is 2. Activation of ACCS_QUERY_TIMEOUT is immediate.

Exchange Alternate Billing Service (continued)

Office parameters by Exchange Alternate Billing Service

Table name	Parameter name	Description
OFCENG	TOPS_ACCS_ACG	This parameter turns ACG control on or off. The TOPS_ACCS_ACG is normally set to Y (Yes), which indicates that ACG is ON. This parameter applies to call processing. This parameter does not affect the ACCSVER command. The system does not activate this feature for a billing number (NPA-NXX or RAO-0/1XX). The system does not activate this feature until the LIDB returns an ACG message that contains the six-digit code. Calls that bill to codes for which Automatic Call Gapping (ACG) is in effect proceed as if the system verifies the billing number at the LIDB. Other office parameter settings do not have depend on the outcome of the call when ACG is in effect. The ACG is in effect and the database query is not complete because of the ACG. When this event occurs, the call can bill as if the LIDB sends a VERIFY message. The range of values is Y (Yes) and N (No). The default is Y. Activation of this parameter is immediate.

Exchange Alternate Billing Service (continued)

Office parameters by Exchange Alternate Billing Service

Table name	Parameter name	Description
OFCENG	TOPS_ACCS_ACG_SIZE	This parameter allows the Operating Company to indicate the size of the target table. This action makes the table random for the hashing function that the system uses to search the control list. The system increases this parameter when the number of probes exceeds the maximum because of collisions in hashing. The BNSNOACG and CCVNOACG registers indicate if the number of probes exceeds the maximum. The values for this parameter are PRIME1, PRIME2, and PRIME3. Value PRIME1 is the smallest and value PRIME3 the largest. The default value for this parameter is PRIME1. Activation of this parameter requires a Reload or cold restart.
OFCENG	TOPS_ACCS_BNS_BLK	This parameter is deleted. Tables ACCSERR, BNSPARMS, and CCVPARMS replace the function of this parameter.
OFCENG	TOPS_ACCS_BNS_VFY	This parameter is deleted. Tables ACCSERR, BNSPARMS, and CCVPARMS replace the function of this parameter.
OFCENG	ACCS_QUERY_TIMEOUT	For offices that use Telecom Canada ACCS, ACCS_QUERY_TIMEOUT is renamed to SDB_QUERY_TIMEOUT. This parameter applies to SDB queries, not LIDB.
OFCENG	TOPS_ACCS_CCV_QUERY_BLK	For offices that use Telecom Canada ACCS, TOPS_ACCS_CCV_QUERY_BLK is renamed to TOPS_SDB_CCV_QUERY_BLK. This parameter applies to SDB queries, not LIDB.
OFCENG	ACCS_QUERY_TIMEOUT	For offices that use Bellcore ACCS, ACCS_QUERY_TIMEOUT is deleted. Table ACCSERR replaces the functionality of this parameter.

Exchange Alternate Billing Service (continued)

Office parameters by Exchange Alternate Billing Service

Table name	Parameter name	Description
OFCENG	TOPS_ACCS_CCV_QUERY_BLK	For offices that use Bellcore ACCS, TOPS_ACCS_CCV_QUERY_BLK is deleted. Table ACCSERR replaces the functionality of this parameter.
OFCVAR	MCCS_SEQ_CALL_LIM	After the subscriber makes a subscriber-dialed MCCS or ACCS call, the subscriber can make a number of sequence calls without a limit. This parameter allows the operating company to limit the number of sequence calls from a single Billing Validation Center (BVC) or a Line Information Database (LIDB) query. The system routes calls that this parameter blocks to an announcement. The MCCS_SEQ_CALL_LIM parameter limits the number of MCCS or ACCS sequence calls for each switching unit. If a subscriber attempts to go beyond the acceptable number of sequence calls for a specified office, the system plays announcement number 9. The system takes the call down. The subscriber must enter the calling card number again. The subscriber must follow the same rules with which the subscriber first enters the calling card number. The minimum value for this parameter is 0 and the maximum value is 127. The default is 127. Activation of this parameter is immediate.
OFCVAR	MCCS_SEQ_QUERY	The function of MCCS_SEQ_QUERY changes. This parameter applies to CCS6 queries, not CCS7 queries.

Exchange Alternate Billing Service (continued)

Datafill sequence

The tables that require datafill to implement Exchange Alternate Billing Service appear in the following tables. The tables appear in the correct entry order.

Datafill requirements for Exchange Alternate Billing Service

Table	Purpose of table
C7GTTYPE	CCS7 Global Title Translation Type
C7GTT	CCS7 Global Title Translation
MCCSOST	TOPS Mechanized Calling Card Service Orig Station Treat
CCVPARMS	Calling Card Validation Parameters
ACCSERR	Automatic Calling Card Service Errors
BNSPARMS	Billed Number Screening Parameters
BNSINFO	Billed Number Screening Parameters
CCVPARMS	Calling Card Validation Parameters
INTCCFMT	International Calling Card Format
OCCINFO	Equal Access Other Common Carrier Information
CARRSCRN	Carrier Screening
CCVINFO	Calling Card Validation Information
TOPSPARM	TOPS Parameters

Datafilling table C7GTTYPE

The datafill for Exchange Alternate Billing Service for table C7GTTYPE appears in the following table. Fields that apply directly to Exchange

Exchange Alternate Billing Service (continued)

Alternate Billing Service appear. See the data schema section of this document for a description of the other fields.

Datafilling table C7GTTYPE

Field	Subfield or refinement	Entry	Description
GTTNAME		alphanumeric	This table must define a Global Title Translation Name for the EABS (ACCS) application, and assign a corresponding GTT number (field GTNUM).
GTNUM		253	The value 253 is assigned to the ACCS application.
GTTID		ACCSGT	The pre-defined Global Title Translation Identifier for EABS is ACCSGT.

Datafilling table C7GTT

Datafill for Exchange Alternate Billing Service for table C7GTT appears in the following table. The fields that apply directly to Exchange Alternate Billing Service appear. See the data schema section of this documen for a description of the other fields.

Datafilling table C7GTT

Field	Subfield or refinement	Entry	Description
			This table does not change.

Datafilling table MCCSOST

Datafill for Exchange Alternate Billing Service for table MCCSOST appears in the following table. The fields that apply directly to Exchange Alternate

Exchange Alternate Billing Service (continued)

Billing Service appear. See the data schema section of this document for a description of the other fields.

Datafilling table MCCSOST

Field	Subfield or refinement	Entry	Description
			This table contains one entry for each incoming or two-way TOPS trunk group in an office. Table MCCSOST Indicates if EABS queries can occur for 0+ call on TOPS trunk groups.
	OST	BVCLOOK	If field OST=BVCLOOK, the system sends a query over the CCS7 links to determine if the station is qualified for EABS service.

Datafill example for table MCCSOST

Sample datafill for table MCCSOST appears in the following example.

MAP example for table MCCSOST

```
     CLLI           PUBLIC              PRIVATE
                  STAT        OST     STAT        OST
-------------------------------------------------------
OCALMCCS          SERV        TONE    SERV        TONE
ORLDPRMCCS        NOSERV      SERV    TONEANN
TAMPBVMCCS        SERV        TONE    BVCLOOK     NOMCCS
```

The OCALMCCS entry has a state of MCCS service for calls that originate on public and private telephones for this specified trunk group. the same OST applies on the two sides (i.e., TONE).

The ORLDPRMCCS entry has a state of No MCCS Service for calls that originate on public telephones and MCCS Service for private telephones. This status indicates that the two statuses are separate. A different OST applies on each side (- vs. TONEANN).

The TAMPBVMCCS entry has a state of MCCS service for public telephones and BVC query for private telephones. The entry has these statuses where the Operating Company chooses a default OST to apply if the BVC query fails (i.e., NOMCCS).

Exchange Alternate Billing Service (continued)

Datafilling table CCVPARMS

Datafill for Exchange Alternate Billing Service for table CCVPARMS appears in the following table. The fields that apply directly to Exchange Alternate Billing Service appear. See the data schema section of this document for a description of the other fields.

Datafilling CCVPARMS

Field	Subfield or refinement	Entry	Description
			This table defines the type of database query that the system performs. The calling card or billed number determines the type of query that the system must perform. This table specifies the database to which the system sends a Calling Card Validation or a Billed Number Screening query. This table specifies the database if the operator must perform validation, or if the system must block alternate billing to a number (with this feature.) Table CCVPARMS allows a switch to support access to databases through CCS7 links. This table is referenced through table CCVINFO. This action occurs when ACCS is present in an office and a subscriber bills a collect call. This action occurs when the subscriber bills a collect call to a third number, or to a calling card.
	VALTYPE		Field VALTYPE can be set to the following values: • LIDB - Line information database query • BVC - Billing validation center • MANUAL - The TOPS operator must perform validation of the billing number or calling card. In BCS32, the range of values of field VALTYPE expands to include BLK (other datafillable values are LIDB, BVC, SDB, and MANUAL). The alternate billing number indexes table CCVPARMS, and this field is entered as BLK. When this event occurs, the system blocks the alternate billing to this number.

Exchange Alternate Billing Service (continued)

Datafill example for tables CCVINFO and CCVPARMS

Sample datafill for tables CCVINFO CCVPARMS appears in the following example.

MAP example for table CCVINFO

```
  IDX                    PARMSIDX    CARRIDX
-------------------------------------------
    0                         297          0
    1                         297          0
    2                         297          0
    3                         297          0
    4                         297          0
    5                         297          0
    6                         297          0
    7                         297          0
    8                         297          0
    9                         297          0
```

MAP example for table CCVPARMS

```
       IDX                      VALAREA
-------------------------------------
         0     LIDB  $ N   2 N  0   0
        10     LIDB  $ N   2 N  0  10
       297                       BVC
       298                       SDB
       299                       BLK
       300                    MANUAL
```

Assume that, for a calling card call, the NPA_NXX of the billing number is 212220. The system checks tables CCVINFO and CCVPARMS to determine which database the system must query. The system sends a query to the BVC. The datafill from the previous example determines which query the system must send. If the third tuple is deleted from the table, queries for numbers that begin with 2 can go to the LIDB. If the 2 is added again to the table, the display resembles the previous example. If 212220 is added to the table, the table expands to a point where entries that begin with 2 are not clear. See the following example.

Exchange Alternate Billing Service (continued)

MAP example for table CCVINFO

```
        IDX     PARMSIDX  CARRIDX
---------------------------------
          0         297         0
          1         297         0
         20         297         0
        211         297         0
       2120         297         0
       2121         297         0
      21220         297         0
      21221         297         0
     212220           0         0
     212221         297         0
     212222         297         0
     212223         297         0
     212224         297         0
     212225         297         0
     212226         297         0
     212227         297         0
     212228         297         0
     212229         297         0
     212230         297         0
     212231         297         0
     212232         297         0
     212233         297         0
     212234         297         0
     212235         297         0
     212236         297         0
     212237         297         0
     212238         297         0
     212239         297         0
      21224         297         0
      21225         297         0
      21226         297         0
      21227         297         0
      21228         297         0
      21229         297         0
       2123         297         0
       2124         297         0
       2125         297         0
       2126         297         0
       2127         297         0
```

Exchange Alternate Billing Service (continued)

MAP example for table CCVINFO (continued)

```
    CCDIGS     PARMSIDX   CARRIDX
-----------------------------------
      2128          297         0
      2129          297         0
       213          297         0
       214          297         0
       215          297         0
       216          297         0
       217          297         0
       218          297         0
       219          297         0
        22          297         0
        23          297         0
        24          297         0
        25          297         0
        26          297         0
        27          297         0
        28          297         0
        29          297         0
         3          297         0
         4          297         0
         5          297         0
         6          297         0
         7          297         0
         8          297         0
         9          297         0
```

MAP example for table CCVPARMS

```
        IDX                      VALAREA
-------------------------------------
          0     LIDB  $ N   2 N  0   0
         10     LIDB  $ N   2 N  0  10
        297                        BVC
        298                        SDB
        299                        BLK
        300                     MANUAL
```

Every index that begins with the digit 2 expands because the system sends a query for 212220 to the LIDB. This automatic expansion (banding) conserves data store for the ACCS application.

Datafilling table ACCSERR

Datafill for Exchange Alternate Billing Service for table ACCSERR appear in the following table. The fields that apply to Exchange Alternate Billing Service appear in this table. See the data schema section of this document for a description of the other fields.

Datafilling table ACCSERR

Field	Subfield or refinement	Entry	Description
IDX		PUBCCV, PUBCOLL, PRIVCOLL, PUB3RD, or PRIV3RD	Index from table CCVPARMS (field PUBCCV or PRIVCCV) or table BNSPARMS (field PUBCOLL, PRIVCOLL, PUB3RD, or PRIV3RD).
NOXLSPAD		A, V, O, or B	Translation does not occur for this specified address. An error in GTT that occurs at the SCCP level. The translating entity for a message that must go to an LIDB does not always have an entry in the translating table for the Global Title. A calling card number that the system chooses at random with an NPA or RAO code that is not used can cause the error.
UNEQUSER		A, V, O, or B	Unequipped user. Corrupt addressing information in the called party address parameter of the query message.
NETFAIL		A, V, O, or B	Network failure). Failure of the CCS7 network.
NETCONG		A, V, O, or B	Network congestion. Congestion of the CCS7 network.
SUBFAIL		A, V, O, or B	Subsystem failure). Failure of the LIDB node.
SUBCONG		A, V, O, or B	Subsystem congestion. Congestion of the LIDB node.
NOXLADDER		A, V, O, or B	Translation does not occur for an address of this nature. A serious SCCP-layer operational problem in the OSS or STP.

Datafill example for table ACCSERR

Sample datafill for table ACCSERR appears in the following example.

Exchange Alternate Billing Service (continued)

MAP example for table ACCSERR

```
IDX  1  2  3  4  5  6  7  8  9  10 11 12 13 14 15 16 17 18
-------------------------------------------------------------
 0   A  B  A  A  A  A   B  A  B  B  A  B  A  O  A  O  O  O
 1   B  A  A  B  B  A   A  A  A  A  B  B  O  A  A  O  O  O
 2   A  A  B  B  B  A   A  B  A  A  B  O  A  A  A  O  O  O
 3   B  B  A  V  A  A   B  B  V  V  B  V  B  V  V  O  V  V
 4   B  B  A  V  A  A   B  B  V  V  B  V  B  V  V  O  O  V
 5   A  A  B  B  B  A   A  B  A  A  B  O  A  A  A  O  A  O

where:
          1  = NOXLSPAD
          2  = UNEQUSER
          3  = NETFAIL
          4  = NETCONG
          5  = SUBSFAIL
          6  = SUBSCONG
          7  = NOXLADDR
          8  = PROTPROB
          9  = UNEXDATA
          10 = UNAVNETR
          11 = MISSREC
          12 = SCRNRESP
          13 = MISROUTE
          14 = MISSGR
          15 = VACANTGR
          16 = NONPARGR
          17 = TIMEOUT
          18 = MISCERR

            A = ACCEPT
            V = VERIFY
            O = ATTACH OPERATOR
            B = BLOCK (with possible reprompt)
```

Datafilling table BNSPARMS

Datafill for Exchange Alternate Billing Service for table BNSPARMS appears in the following table. The fields that apply to Exchange Alternate Billing

Service appear in this table. See the data schema section of this document for a description of the other fields.

Datafilling table BNSPARMS

Field	Subfield or refinement	Entry	Description
IDX		0-254	Index to table from table BNSINFO.
GTTNAME		a maximum of 16 characters	Global Title Translation name. Table C7GTTYPE, field GTTNAME contains definition of name.
TIMEOUT		0-255	Time-out. Time-out in seconds. Time to wait for a response from a query.
PUBCOLL		0-254	Public collect. Index to table ACCSERR when calling number is a public telephone and billing is collect.
PRIVCOLL		0-254	Private collect. Index to table ACCSERR when calling number is a private telephone and billing is collect.
PUB3RD		0-254	Public third. Index to table ACCSERR when calling number is a public telephone and billing is to a third number.
PRIV3RD		0-254	Private third. Index to table ACCSERR when calling number is a private telephone and billing is to a third number.

Datafill example for table BNSPARMS

Sample datafill for table BNSPARMS appears in the following example.

MAP example for table BNSPARMS

```
IDX  GTTNAME  TIMEOUT PUBCOLL PRIVCOLL PUB3RD PRIV3RD
-------------------------------------------------
 0   ACCSGT     3       2       2       0        1
 1   ACCS3GT    2       2       3       1        2
 2   ACCS2GT    2       2       3       0        2
```

Datafilling table BNSINFO

Datafill for Exchange Alternate Billing Service for table BNSINFO appears in the following table. The fields that apply to Exchange Alternate Billing

Exchange Alternate Billing Service (continued)

Service appear in this table. See the data schema section of this document for a description of the other fields.

Datafilling table BNSINFO

Field	Subfield or refinement	Entry	Description
BNSDIGS		1-18 digits	Billed number digits. NPA/NXX (or another part) of the queried number.
PARMSIDX		0-254	Parameter index. Index to table BNSPARMS. This field allows more than one issuerid to index the same tuple in table BNSPARMS.

Datafill example for table BNSINFO

Sample datafill for table BNSINFO appears in the following example.

MAP example for table BNSINFO

```
BNSDIGS     PARMSIDX
--------------------
212220         1
 2024          2
919220         1
919555         2
202555         2
```

Datafilling table CCVPARMS

Datafill for Exchange Alternate Billing Service for table CCVPARMS appears in the following table. The fields that apply to Exchange Alternate Billing Service appear in this table. Refer to the data schema section of this document for a description of the other fields.

Datafilling table CCVPARMS

Field	Subfield or refinement	Entry	Description
IDX		0-254	Index from table CCVINFO, field PARMSIDX.
GTTNAME		to a maximum of 16 characters	Global Title Translation name (string of a maximum of 16 characters). Table C7GTTYPE, field GTTNAME contains the definition of name.

Exchange Alternate Billing Service (continued)

Datafilling table CCVPARMS

Field	Subfield or refinement	Entry	Description
CLDREQ		Y or N	Called number required (Y or N). Does card issuer require the query to include the called number. If Y, wait to send the validation query until the operator obtains a forward number. Instances where the operator cannot obtain a called number are: • operator handled DA calls • inwards validation calls The system sends the query with the called number equal to zeroes. The card issuer must perform verification.
TIMEOUT		0-255	Time-out in seconds. Time to wait for a response from a query.
SEQQRY		Y or N	Sequence query (Y or N). Send query on every sequence call?
PUBCCV		0-254	Public index. Index to table ACCSERR when calling number is a public telephone.
PRIVCCV		0-254	Private index. Index to table ACCSERR when calling number is a private telephone.

Datafill example for table CCVPARMS

Sample datafill for table CCVPARMS appears in the following example.

MAP example for table CCVPARMS

```
IDX  GTTNAME  CLDREQ  TIMEOUT  SEQQRY  PUBCCV
PRIVCCV
------------------------------------------------
 0   ACCSGT     Y       2       Y       2       3
 1   ACCS3GT    N       2       Y       2       3
 2   ACCS2GT    Y       3       N       0       1
 3   ACCS5GT    Y       2       Y       0       1
254  ACCS4GT    N       2       Y       2       2
```

Exchange Alternate Billing Service (continued)

Datafilling table INTCCFMT

Datafill for Exchange Alternate Billing Service for table INTCCFMT appears in the following table. The fields that apply to Exchange Alternate Billing Service appear in this table. See the data schema section of this document for a description of the other fields.

Datafilling table INTCCFMT

Field	Subfield or refinement	Entry	Description
ISSUERID		numeric	Issuer Identifier. This field is the key to the table. This field contains the identification of the international calling card.
ACCIDSIZ		1-15	Account ID Size. This field contains the number of digits in the account number for the international calling card. The combined number of digits in the account ID (ACCIDSIZ) and ISSUERID cannot exceed 19.
PINSIZE		0-4	Personal ID Size. This field contains the length of the PIN part of the international calling card number. The combined number of digits in the PIN (PINSIZE) and the ISSUERID cannot exceed 23.
VAL14DIG		Y or N	Validate 14-Digit Number. This field determines if the separate account ID number (ACCID) and the PIN form a 14-digit number to validate the CCITT calling card.

Datafill example for table INTCCFMT

Sample datafill for table INTCCFMT appears in the following example.

MAP example for table INTCCFMT

```
ISSUERID  ACCIDSIZ  PINSIZE  VAL14DIG
-----------------------------------
 891222      11       4         Y
8933345       6       4         Y
 891223      15       4         N
8911487      16       4         N
```

Datafilling table OCCINFO

Datafill for Exchange Alternate Billing Service for table OCCINFO appears in the following table. The fields that apply to Exchange Alternate Billing Service appear in this table. See the data schema section of this document for a description of the other fields.

Datafilling table OCCINFO

Field	Subfield or refinement	Entry	Description
			Enter data in this table with different carriers that are for use in new table CARRSCRN, field CARRLIST.

Datafill example for table OCCINFO

Sample datafill for table OCCINFO appears in the following example.

MAP example for table OCCINFO

```
CARRNAME CARRNUM  ACCESS ORIGCARR INTER INTNTL INTRA ANI FANI
ONISCRN AD1 OVERLAP INTERS INTRAS TERMREC OCCSEPNO OPSIG
PICIND NOA950 INCCPN DTMFIND OPSERV CACBLOCK CTDOA CMCMON
SCRNWATS CRMCRA ATPINCL INTRAOPR
------------------------------------------------------------
   C111    0288     EAP       N      Y     Y     N    Y   N
   N    Y       Y      Y      Y    LONG      0     FGRPC
   Y      N      N       N      N       N       N     N
   N        Y       N       N
```

Datafilling table CARRSCRN

New table CARRSCRN provides calling card/carrier screening. This table indicates which carriers can complete an IEC call that bills to a particular calling card. In this table, data are entered in permitted carriers against indexes of calling cards.

Datafill for Exchange Alternate Billing Service for table CARRSCRN appears in the following table. The fields that apply to Exchange Alternate Billing

Exchange Alternate Billing Service (continued)

Service appear in this table. See the data schema section of this document for a description of the other fields.

Datafilling table CARRSCRN

Field	Subfield or refinement	Entry	Description
IDX		0-62	A key to this table. Table CCVINFO, field CARRIDX contains a definition of this key.
PERMIT		ALL, NONE, or SOME	Indicates if ALL, NONE, or SOME carriers can complete an IEC call.
CARRLIST			A listing of a maximum of 16 4-digit carriers that can complete a call if field PERMIT=SOME. In other occurrences, this field is not used.

Datafill example for table CARRSCRN

Sample datafill for table CARRSCRN appears in the following example.

MAP example for table CARRSCRN

```
IDX   PERMIT   CARRLIST
-----------------------
0     ALL
1     NONE
2     SOME     0288
3     SOME     0333
62    SOME     0333,0555
```

The first two tuples are defaults. The system cannot alter or remove these tuples.

Exchange Alternate Billing Service (continued)

Error messages for table CARRSCRN

The following error messages apply to table CARRSCRN.

Error messages for table CARRSCCRN

Error message	Description
`Carrier Number must be datafilled in table OCCINFO first.`	Enter data in table OCCINFO before you enter data in the CARRLIST field in table CARRSCRN. Operating company personnel can attempt to add or change a tuple in table CARRSCRN before the addition of the tuple to table OCCINFO. If personnel perform this action, the add or change cannot occur and the system gives an error message.
`Tuple 44 is not datafilled in table CARRSCRN.`	Enter data in table CARRSCRN before you enter a referencing tuple in table CCVINFO. Operating company personnel can attempt to add or change a tuple in table CCVINFO before the addition of the tuple to table CARRSCRN. If personnel perform this action, the add or change cannot occur and the system gives an error message.
`Tuple referred to by another table - use TABREF to get a potential table list.`	Operating company personnel can attempt to delete a table CARRSCRN tuple. A tuple in table CCVINFO references this tuple. If personnel perform this action, the delete cannot occur and the system gives an error message.
`Neither Tuple 0 nor Tuple 1 can be deleted or changed.`	Operating company personnel can attempt to change or delete default tuple 0 or default tuple 1. If personnel perform this action, the change or deletion cannot occur and the system gives an error message.

Datafilling table CCVINFO

Datafill for Exchange Alternate Billing Service for table CCVINFO appears in the following table. The fields that apply to Exchange Alternate Billing

Exchange Alternate Billing Service (continued)

Service appear in this table. See the data schema section of this document for a description of the other fields.

Datafilling table CCVINFO

Field	Subfield or refinement	Entry	Description
CCVDIGS		1-18 digits	Calling Card Digits. Key to table. For domestic (14-digit) calling cards, this is the NPA-NXX or RAO-0/1XX of that calling card.
CARRIDX		0-62	Carrier Index. New field CARRIDX is added as an index to new table CARRSCRN. The system uses table CCVINFO for CCV queries. Table CCVINFO is indexed with one of the following calling card formats: RAO, CIID, CCITT or directory number format.
PARMSIDX		0-254	Parameter Index. Index to table CCVPARMS. This field allows more than one CCVDIGS to index the same tuple in table CCVPARMS. This process reduces the number of tuples required in table CCVPARMS.

Datafill example for table CCVINFO

Sample datafill for table CCVINFO appears in the following example.

MAP example for table CCVINFO

```
CCVDIGS     PARMSIDX
--------------------
212220        254
891222         3
891333         0
8915555        1
 9194         254
919555        254
```

Exchange Alternate Billing Service (continued)

MAP example for table CCVINFO

```
CCVDIGS  PARMSIDX  CARRIDX
-------------------------
212220     254        0
677001     55         2
677101     253        2
834001     6          0
836001     254        62
891999     3          0
891288     4          2
891333     1          3
9194       254        0
919781     250        1
```

If a given calling card number does not have a match in this table, the system does not perform calling card/carrier screening. The call can complete.

Error messages for table CCVINFO

The following error messages apply to table CCVINFO.

Error messages for table CCVINFO

Error message	Description
`Tuple 44 is not datafilled in table CARRSCRN.`	Enter data in table CARRSCRN before you enter data in table CCVINFO with an attribute of table CARRSCRN. Operating company personnel can attempt to add or change a tuple in table CCVINFO before the addition of the referenced tuple to table CARRSCRN. If personnel perform this action, the add or change cannot occur and the system gives an error message.
`Calling card/carrier screening is not available without the TOPS Inter-LATA Carrier Service package.`	Enter 0 in table CCVINFO field CARRIDX for switches without the TOPS Inter-LATA Carrier Service Package (TICS). This value is the default value. Calling card/carrier restrictions do not apply. The system gives an error message to personnel that TICS is not present.

Exchange Alternate Billing Service (end)

Tools for verifying translations

Exchange Alternate Billing Service does not use translation verification tools.

SERVORD

Exchange Alternate Billing Service does not use SERVORD.

Exchange Alternate Billing Service (MCCS)

Ordering codes

Functional group ordering code: ABS00101

Functionality ordering code: does not apply

Release applicability

BCS36 and later versions

Exchange Alternate Billing Service (MCCS) was introduced in BCS14.

Requirements

To operate, Exchange Alternate Billing Service (MCCS) contains the following requirements:

- BAS Generic, BAS00003
- Operator Services Basic, OSB00101, and table TOPSFTR parameter TOPS_ON_OFF_SWITCH = Y
- TEL CCS7 Base, TEL00008

Description

The following features provide Exchange Alternate Billing Service (MCCS):

Features in functionality

Feature number	Feature name
BR0680	Limit to Number of Sequence Calls
BV1112	Operator-Assisted CCV
BV1113	Billed Number Screening
BV1114	Customer Dialed on TOPS Trunks
BV1115	Customer Dialed on Lines
BV1116	Customer-Dialed Sequence Calls
BV1121	Operator-Assisted Manual Inward Validation
59006865	EOL Notification & EOL of TOPS ACD (TOPS12)

Mechanized Calling Card Service (MCCS) is part of functionality Exchange Account Alternate Billing. The MCCS reduces the occurrence of false use of credit cards. The MCCS reduces operator work time. The MCCS Call

Exchange Alternate Billing Service (MCCS) (continued)

Processing capability uses Common Channel Interoffice Signaling (CCIS). The capability uses the CCIS to transmit validation queries and responses to and from billing validation data bases and the Traffic Operator Position System (TOPS).

Provisioning is for operator-handled calling card calls. Provisioning is also for direct entry by subscribers of calling card numbers. These subscribers use DTMF telephones. Subscriber entry results in an important reduction in the size of an operator group. The following automatic validation of calling card numbers also results in an important reduction in the size of the operator group.

The MCCS capability provides the following:

- Operator assisted calling card validation (CCV) - TOPS operators use the billing system to validate calling card numbers that use CCIS direct signaling.
- Operator assisted manual inward validation - TOPS operators validate calling card numbers for other operators.
- Billed number screening - A subscriber can prevent collect or third number billing to an account.
- Customer dialed on TOPS trunks - Customers enter the calling card number and complete the call without an operator.
- Customer dialed on line - MCCS service is provided to subscriber lines on a TOPS DMS-100/200 switch. This switch does not contain contain loop-around trunks.
- Customer dialed sequence calls - After MCCS service is provided to a subscriber, the subscriber can make additional calls. The subscriber does not have to enter the calling card number again to make these calls.
- Limit of number of sequence calls - An office parameter can limit the number of sequence calls that a single BVC query permits.

Operation

Operator assisted CCV

Calling card billing requires operator help in the following occurrences:

- The originating station is not equipped for DTMF signaling.
- The toll billing office is not equipped to receive automated calling card digits. Refer to Operation for more information.
- The local office is not equipped for Automatic Number Identification (ANI).

Exchange Alternate Billing Service (MCCS) (continued)

- ANI fails at the local or the toll office.
- All announcement circuits or DTMF receivers are busy.
- Subscribers
  - — elect not to dial the calling card number
  - — do not know how to dial the calling card number
  - — require help of the operator for some other reason, for example, a person-to-person call

Operator assisted calling card service is available for other types of calls (not 0+) that reach the operator and calling card billing is requested. These other call types include 0-, 1+ coin, and 1+ hotel. A direct CCIS query to the BVC database makes the MCCS CCV. When the operator enters the calling card number for the subscriber, this query is sent. Average response time for a BVC query is approximately 1 s. If the response time exceeds the maximum of 2 s, the query is lost. When the operator receives the reply from the BVC, the state of the calling card appears.

Operation

With customer-dialed MCCS, the toll switching office where the call routes provides:

- Prompt tones and announcements that request the subscriber to dial the calling card number for 0+ calls
- Receivers that collect DTMF digits

If the system provides MCCS service, the subscriber receives the prompt tone or announcement. The prompt tone or announcement occurs when the toll office is ready to receive the calling card DTMF digits. At this time, a subscriber that elects to not dial the calling card digits can reach an operator. A subscriber can reach an operator by one of the following methods:

- A subscriber does not perform any actions. After 5 s, a timeout occurs.
- A subscriber dials zero.
- A subscriber flashes the switch-hook.

In the preceding methods, automatic reception of calling card digits terminates and an operator intercepts the call. When the subscriber begins to enter the calling card digits, the subscriber can only use one method to access the operator. The subscriber must hang up and dial the call again.

The preceding paragraphs describe how a 0+ origination can reach an operator. Both 0- and 1+ originations can reach an operator in the usual method. The

Exchange Alternate Billing Service (MCCS) (continued)

CCV encompasses all types of originations for which the called or calling party requests calling card billing.

Operator-assisted handling

When the subscriber reaches the operator, the subscriber gives the calling card number to the operator. The operator enters the number. The correct charge class for calling party billing to a calling card is station special calling or person special calling. For collect calls billed to a calling card, the charge class is station special called or person special called. Refer to Personal Identification Number on the page that follows for more information on charge class limits. The call progresses in the same method as any other operator-handled call that requires special billing. The method of calling card validation is different from other calls.

The subscriber can ask the operator to provide any of the standard services available to subscribers. When the system accepts the billing information, the system outpulses the call automatically and the operator releases this call. The following are examples of the services available to the subscriber:

- collect or person-to-person call handling
- a charge to third number billing
- a new called number

Calling Card Validation

The calling card number is a 14 digit number. This number consists of a 10-digit billing number plus a 4-digit Personal Identification Number (PIN). The billing number is normally the directory number (NPA-NXX-XXXX). The billing number can also be a special non-directory number (RAO-(0/1)XX-XXXX), where RAO is the Revenue Accounting Office that assigned that number. The fourth digit distinguishes these two forms of billing numbers. The PIN is of the form NXXX. The N cannot be 0 or 1. The X is 0 through 9.

If the calling card number the operator enters does not conform to the preceding formats, the system rejects the card immediately. If the number does conform, a direct signaling query to the BVC automatically validates the card. The reply from the BVC indicates if the calling card is acceptable. In all occurrences, validation status appears on the operator screen. If billing is not accepted, the operator can enter a calling card number again. This action occurs for validation and display. The call cannot complete until the operator enters an acceptable calling card number or an alternate billing class.

Exchange Alternate Billing Service (MCCS) (continued)

Personal Identification Number

There are two types of Personal Identification Number (PIN) that can associate with a directory billing number. A PIN that is not restricted is correct for calls to all destinations. This PIN is also correct for station-to-station or person-to-person calls. A restricted PIN is correct only for station calls to the billing number (collect only service). In the occurrence of a restricted PIN, the subscriber must quote the 4-digit PIN to the operator. The subscriber does not quote the full 14-digit calling card number because the billed number and the called number are the same.

If the operator enters only a 4-digit calling card number, this number is normally a PIN. The operator normally constructs this number from the 10-digit called number and the 4-digit PIN. If the called number is an operator code or an overseas, INWATS, or Directory Assistance number, the system rejects the PIN immediately. If the called number is not present, calling card validation must be delayed until the operator enters the called number. An example of when a number is not present occurs when a 0- origination requires calling card billing.

The reply to a BVC query can indicate that the system restricts the calling card. This event can occur when the operator enters a 4-digit or a 14-digit calling card number. In this event, person-to-person calls cannot occur. If the billing number does not match the called number, the system rejects the calling card.

Special Number Displays

Calling card numbers appear in the special (SPL) number field at the TOPS console in the format DDD-DDD-DDDD-XXXX. The D is any digit. The

Exchange Alternate Billing Service (MCCS) (continued)

letters XXXX mask the Personal Identification Number for security. The special number displays appear in the following table:

Special number displays

Special number	Description
SPL #	The subscriber does not dial the calling card number. The SPL # appears on call arrival. The SPL # instructs the operator to encourage the subscriber to dial the calling card number directly.
SPL # XXXX	The operator entered a 4-digit PIN. This PIN appears when the called (CLD) number is not present. The full calling card number displays when the operator enters the CLD number.
SPL #<XXXX>	The 4-digit PIN and the called number are not compatible. The SPL #<XXXX> appears when the operator enters either number.
SPL # DDD-DDD-DDDD-XXXX VFY	The operator enters a 14-digit calling card number or a 4-digit PIN when a domestic called number is present. Validation (VeriFY) is in progress.
SPL # DDD-DDD-DDDD-XXXX	The calling card number cannot be validated because of data base access problems. The operator assumes the number is correct and not restricted. The RAO is not known.
SPL # DDD-DDD-DDDD-XXXX DDD	The calling card number is correct and not restricted. The last three digits indicate the RAO.
SPL # DDD-DDD-DDDD-XXXX DDD R	The calling card number is correct and restricted. The last three digits indicate the RAO.
Note: Angle brackets do not appear. In the following table the angle brackets indicate that the enclosed characters flash when these characters appear.	

Exchange Alternate Billing Service (MCCS) (continued)

Special number displays

Special number	Description
SPL #<DDD-DDD-DDDD-DDDD>	The calling card number is not correct. Note that the PIN is not masked.
SPL #<DDD-DDD-DDDD-XXXX DDD R>	The restricted calling card number is not correct because the number does not match the called number. The SPL #<DDD-DDD-DDDD-XXXX 999 R> appears when the operator enters one number or the other number.
Note: Angle brackets do not appear. In the following table the angle brackets indicate that the enclosed characters flash when these characters appear.	

Operator assisted manual inward validation

The Operator Assisted Manual Inward Validation feature F1601 allows a TOPS office to act as host for manual inward validation of credit card numbers for operators in offices not equipped for CCIS/DS verification. Refer to for more information. The name manual indicates that the remote operator must verbally give the number to the TOPS operator. When this action occurs, the TOPS operator enters this number at the TOPS position for validation. This feature does not include the automatic form that the operator uses to enter the number. An operator at a distant office enters this number without the involvement of an operator in the TOPS switch.

Operation

To reach the operator at the TOPS office, the operator at a distant office dials the digit sequence 1160. A routing code precedes this sequence.

Like other inward validation calls, arrangements of translations must occur in the TOPS office. This action uses table TOPS routing to bring the call to a TOPS position. The call origination digit sequence 1160 handles Manual Inward Validation.

When the call reaches a TOPS position, the TOPS operator requests the 14-digit calling card number from the remote operator.

The TOPS operator enters the number at the TOPS position. The operator uses the KP SPL key to enter this number. This action causes a CCIS/DS query to the Billing Validation Center (BVC) database. While the operator waits for the reply, the 14-digit number appears. The letters XXXX replace the 4 PIN digits for security. The letters VFY (VeriFY) follow the number. When the

Exchange Alternate Billing Service (MCCS) (continued)

operator receives the reply from the BVC, the system erases the VFY and updates the display as follows:

- Number invalid. Flash full 14-digit display (including the PIN as entered) to allow full verification and reentry.
- RAO known, PIN not limited. Display RAO digits in place of VFY.
- RAO known, PIN restricted. Display RAO digits, the letter R follows.
- RAO not known. No display beyond the 14-digit number.

The operator passes the reply verbally to the remote operator. If the number is not correct, the remote operator checks with the subscriber and attempts to obtain another number. This number is for the TOPS operator to check. When the operators finish, the TOPS operator releases the call. This operator becomes available for additional traffic. The trunk idles normally when the remote operator releases the call.

Billed number screening

Billed Number Screening (BNS) allows a customer to designate that collect and/or third-number billing are not accepted at a specified line number. Any calling party that uses TOPS and attempts to bill a collect or third-number call to that number, has the call denied. This action occurs before the call advances beyond the TOPS. The BNS also includes a Public Telephone Check (PTC) feature. This feature allows telephone companies to prevent collect or third-number billing to the public telephones of these companies. The BNS helps reduce the amount of fraud in billing to public telephones or nonworking numbers.

The BNS applies to all normal collect or third-number calls placed through a TOPS operator. The feature allows the designation of numbers to one of the following billing restrictions:

- collect denied
- third-number denied
- public telephone check

An attempt by an operator to key a number as collect or third-number billing causes a BNS (if available) query. This query is of a billing validation database. This query notifies if any billing restrictions are present. The billing validation databases are at several distributed billing validation centers (BVCs). These BVCs are accessed through CCIS/DS. The CCIS is the direct signaling feature of the CCIS network. All the BNS information is in a group with the mechanized calling card service (MCCS) information. This information is in a group according to the NPA-NXX of the BNS and MCCS.

Exchange Alternate Billing Service (MCCS) (continued)

Each operating company must administer the data for that operating company. Total turnaround time of a database query must be less than 2 s. These databases return a code. This code indicates if the query was successful. This code also indicates an explanation of the error.

Customer dialed on TOPS trunks

This capability allows subscribers to enter the calling card number. The capability also allows subscribers to complete the call without access to an operator. The credit card design is changed to allow for this action to occur. The previous credit card format had 14 digits. These digits contained a 10-digit billing number, a 3-digit number for the Revenue Accounting Office (RAO) code, and a single check digit. A check digit algorithm, can determine the validity of a Revenue Accounting Office Digit (RAOD) type credit card. The RAO type credit card is for special billing. The calling card format is RAO=0/1 XX+XXXX+PIN.

The current calling card format includes the called number (NPA plus 7 digits) and a Personal Identification Number (PIN). A PIN is a 4-digit code. The first digit cannot be a 1 nor a 0. The 3 digits that remain can have any value from 0 through 9. The subscriber can designate a PIN as restricted or not restricted. A restricted PIN permits only station-to-station calls to the billing number. An example of a station-to-station call is collect-only service. A not restricted PIN is correct for calls to all destinations. You can use a PIN that is not restricted for station-to-station or person-to-person billing. The calling card format is NPA+NXX+XXXX+PIN.

A subscriber can use a DTMF telephone to enter a calling card number. The system forwards the number to a Billing Validation Center (BVC). This action occurs for calling card number verification. Subscriber-dialed calling card calls do not require operator interruption. An announcement system provides verbal instructions and prompts to the subscriber. Refer to section Announcements for a list of MCCS announcements.

The billing validation data base is maintained in several distributed BVCs. The BVCs are accessed with the use of the CCIS Direct Signaling (CCIS/DS) feature of the CCIS network. All data for a specified RAO or NPA-XXX reside in a single BVC. The data resides in a single BVC to allow a routing of queries by the number being queried. The BVCs are associated with the Originating Toll Centers (OTC). The operating company provides this information.

A BVC query must have an average response time that approaches 1 s, with a maximum of 2 s. A CCIS network failure or congestion in an separate BVC can cause the loss of queries. If a BVC query is lost, system time-out is a maximum of 2 seconds. When this event occurs, the credit card number is normally correct and the call can route.

Exchange Alternate Billing Service (MCCS) (continued)

Operation

The first step in subscriber-dialed calling card validation is a check of table MCCSOST. This check identifies the type of Originating Station Treatment (OST). This check occurs immediately after a subscriber picks up the handset and dials 0+ or 01+. The three types of originating station treatments are as follows:

1. subscriber-dialed MCCS service is not present, a subscriber line routes to an operator
2. alerting tones
3. alerting tone plus prompt announcement.

Subscribers that use telephones without MCCS, like rotary dial telephones, receive treatment 1. Subscribers that use telephones with MCCS and that understand the service, like a DTMF telephone in a residence, receive treatment 2. Subscribers that use telephones with MCCS and do not understand the MCCS, like a public DTMF telephone, receive treatment 3.

To determine the type of OST to apply to a call, table MCCSOST is checked. Table MCCSOST contains one tuple for each incoming and 2-way TOPS trunk group in an office. Each tuple contains two parts. One part applies to the calls that originated on public telephones. The other part applies to calls that originated on a private telephone. In each part, one of three states is specified:

- no service
- service
- BVC lookup

If the value is no service, OST number 1 is applied. If the value is calling card service, the operating company must specify that OST number 2 or number 3 applies. This action occurs when the operator enters a 4-digit or a 14-digit calling card number. The operating company must specify the default action to take when BVC lookup cannot occur (OST number 1, 2, or 3). The operating company must specify this action when the value is BVC lookup. The BVC lookup either returns a result that corresponds to one of the three OSTs, or the lookup fails. When the lookup fails, OST failure is applied. The operating company specifies the OST failure. A call can originate in an MCCS office on a TOPS trunk group that does not have an entry in the MCCSOST table. When this event occurs, OST number 1 is applied.

Note: A trunk group can have a state of no service or service. One or both states can occur if all calls that originated on public telephones can receive the same OST. A trunk group can also have a state of no service or service. This event can occur if all calls that originated on private telephones on that

trunk group can receive the same OST. When these events do not occur, the status must be BVC lookup.

Each trunk group has two states. These states are independent. Calls that originate on public telephones on a trunk group can have a status of service. Calls that originate on private telephones on the same trunk group could have a status of BVC lookup.

Reaching an operator

After OST 2 or 3 is applied, subscribers decide if they want an operator. If subscribers do want an operator, three options are available:

- wait 5 for a time-out
- flash the switchhook
- from a DTMF telephone, enter 0 or 0 + octothorpe (#) which causes an operator to attach.

  Dialing 0 + and the octothorpe is required for MCCS before BCS19.

Entering the calling card number

Note, this section makes references to a list of sequence call timing parameters (T1 to T15). This section also refers to a list of MCCS announcements. These announcements appear in the section Announcements.

If the subscriber does not want an operator, the subscriber enters a 14-digit calling card number or a 4-digit PIN. The subscriber enters the 4-digit PIN if the billing number is the same as the called number. A format check is applied to the number. If the subscriber enters 14 digits, the number must appear in one of the formats described earlier. This number must appear with a 4-digit PIN. If the subscriber enters a 4-digit PIN, the first digit cannot be 0 or 1. The called number cannot be INWATS, directory help, or overseas.

The 800 is a correct NPA. The 800 is not correct when you use the 800 in a calling card number.

If the number passes the format check, a BVC request is made with the use of the CCIS network. If the calling number is correct, the system outpulses the number and the THANK YOU announcement returns to the caller. If the BVC request is not successful, announcement number 2 plays. If dialing does not occur in 3 s, the T4 timing parameter and the MCCS alerting tone occurs. The subscriber has 3 s (T5) to begin to dial. After 3 s, announcement number 3 prompts the subscriber. After this announcement, the subscriber has 5 s (T6) to dial. If the subscriber does not dial a digit in this interval, the subscriber receives announcement number 9. When this action occurs, the call ends. If the subscriber enters a second calling card number and this number fails to

Exchange Alternate Billing Service (MCCS) (continued)

pass the checks, announcement number 4 plays. When this event occurs, the call terminates. If the second attempt is successful, the system outpulses the number and the caller receives the THANK YOU announcement.

Time-outs

Note, this section refers to a list of sequence call timing parameters (T1 to T15). This list appears in the section Announcements.

A basic interdigit time-out of 5 s (timing parameter T9) applies to MCCS calls after the subscriber enters the fourth digit. Longer time-outs are used after natural breaks in a keying sequence. After an NPA entry, a longer sequence is used.

After a subscriber dials 0+, and if OST is set to tone only, the subscriber has 5 s (timing parameter T9) to begin dialing. The subscriber dials the calling card number or takes action to attach an operator. If OST is set to tone and announcement, the subscriber has 1 s (timing parameter T2) to begin action. If no action is started, announcement 1 is played. The subscriber has an additional 5 s (timing parameter T3) to start dialing or to take action to get an operator. If the subscriber does not take action by the end of this period, an operator attaches to the call automatically.

Error Conditions

Note, this section refers to a list of MCCS announcements that appear in section Announcements.

If the BVC requests are not complete, announcement 2 plays to the caller. If the caller does not start to dial in 3 s, the MCCS alerting tone occurs. The subscriber has 3 s to begin to dial another calling card number. After the 3 seconds, announcement 3 prompts the subscriber. After announcement 3 plays, the subscriber has 5 s to redial. If this card number again fails to pass the checks, announcement 4 plays and the call terminates. If the second attempt is successful, the system outpulses the number and the caller receives the THANK YOU announcement.

Different error conditions can occur when an MCCS keying sequence occurs. A time-out can occur after a subscriber begins to dial a calling card number. The octothorpe (#) symbol is an end-of-digit indicator. The subscriber can miss one of the digits in the calling card number. When this event occurs, the subscriber presses the octothorpe (#) to generate an error condition. If the subscriber enters the octothorpe (#) immediately after the OST is applied, which indicates a calling card number of zero digits, the system generates an error condition. A character that is not correct, like an asterisk (*), causes an error condition. These errors are equivalent to calling card numbers that are not correct. If this is the first attempt, announcement 2 plays and the subscriber

receives a second chance to enter the calling card number. If this is the second attempt, announcement 4 plays and the call terminates.

Disconnects and flashes

Disconnects terminate a call. Flashes are ignored except for the following:

- after the application of an OST, if the subscriber flashes, the subscriber is sent to an operator
- if the subscriber enters 0 and flashes, the subscriber is sent to an operator.

Digits that arrive during a prompt announcement or tone are ignored. There are two exceptions:

- if the digits arrive when announcements 1, 2, 3, 5, 6, or 7 occur
- when the alert tone occurs, the digits are processed normally and the announcement tone terminates.

Customer dialed on line

This capability allows MCCS service from subscriber lines to be supported in a DMS-100/200 TOPS environment. The system supports these lines without the need for loop-around trunks.

Operation

This capability allows Individual Flate Rate (1FR) Automatic Number Identification (ANI) lines without options, coin lines, 1FR hotel lines, and Private Branch Exchange (PBX) hotel lines to route directly to MCCS.

Lines can have MCCS service. This service can occur if these lines have DTMF service. If a line has DTMF service, application of OST must occur. When OST is applied to a line, the OST determines if a line receives MCCS service. If a line receives MCCS service, the OST determines if a tone or a tone and an announcement are played. The tone and announcement prompt the calling subscriber. Lines associate with TOPS trunk group CLLI names. This event occurs to determine the type of OST to apply to a line. The association of the entry in the ZEROMPOS field of the LINEATTR Table with a CLLI in the TOPLNDIS Table causes this action. This CLLI name indexes Table MCCSOST. This table contains the OST information.

Prepay coin service telephones require that the telephone retains the first deposit. When the telephone retains the deposit, the DTMF keypads of the telephones are enabled. Offices that use this feature must be in a coin retention mode. The telephone returns the first deposit when the calling subscriber disconnects.

Exchange Alternate Billing Service (MCCS) (continued)

Customer dialed sequence calls

This capability allows MCCS subscribers that correctly entered the calling card numbers to make additional calls. These subscribers do not have to enter the calling card number again to make additional calls. The octothorpe (#) sign signals the DMS TOPS office that the subscriber requested a sequence call and another called number is entered.

Operation

A caller can make an MCCS call with a calling card and with a PIN that is not restricted. When this event occurs, the calling subscriber waits for the called subscriber to go on hook. When the called party goes on-hook, the subscriber enters an octothorpe (#). A correct dialing sequence follows the #. A THANK YOU message plays to the subscriber. If the system can successfully translate the called number, the calling subscriber connects to the desired party. If the system cannot translate the number, the subscriber connects to a standard tone or announcement.

The octothorpe (#) initiates a sequence call. The octothorpe (#) is an optional end of dialing delimiter. The following implications are present:

- An octothorpe (#) can be received after the system outpulsed the MCCS calling card number and before answer supervision is received. When this event occurs, the octothorpe (#) is treated as a request to initiate a sequence call. A subscriber dials the MCCS calling card number. An octothorpe (#) received from a calling subscriber after a called party has gone on-hook is also treated as a request to initiate a sequence call.
- An octothorpe (#) received after the caller dials a number of digits that is not correct causes an error condition.
- If the caller dials several octothorpes (#) in a row, the system only processes the first octothorpe.
- After the called subscriber disconnects, the calling subscriber has 20 seconds to initiate a sequence call. The subscriber enters an octothorpe (#) to initiate this call. If the calling subscriber does not perform this action, the call terminates. When this event occurs, the calling subscriber receives a dial tone.

After the calling subscriber enters an octothorpe (#), the subscriber has two seconds to begin to enter the called number. If the subscriber does not begin the entry at this time, announcement number 5 prompts the subscriber. Refer to section Announcement. After announcement number 5 plays, the subscriber has 10 s to begin to enter the called number. If the subscriber does not enter the called number in 10 s, announcement number 5 plays again. The subscriber has an additional 10 s to enter the called number. If the subscriber

does not enter the called number, announcement number 9 plays. When this action occurs, the call terminates.

If a calling subscriber does not receive an answer from a correctly dialed MCCS call, the subscriber can terminate the call. The subscriber can enter the octothorpe (#) to begin an MCCS sequence call. A correct dialing sequence is one of the following:

- international sequence call: 01 + country code national number followed by an optional "#"
- other sequence calls: 7- or 10-digit called number followed by an optional "#":
  - NXX XXXX (#) - 7 digit number
  - NPA NXX XXXX (#) - 10 digit number

When an MCCS call is an IntraLATA call and the caller dials a following called number InterLATA, the system blocks the number. When this event occurs, announcement number 15 plays. The TOPS handles an IntraLATA call. An IC operator system handles an InterLATA call.

Limit of number of sequence calls

This capability allows an operating company to create an office parameter. The office parameter limits the number of sequence calls permitted from a single BVC query. Announcement number 9 plays when this feature blocks calls. Refer to section Announcements The range for the total number of sequence calls is 0 through 127 calls.

Operation

This capability allows a subscriber to make additional calls. The subscriber can make these calls when the subscriber correctly enters a calling card number. The subscriber does not have to enter the calling card number again to make these calls. The subscriber can make a maximum of 127 additional calls.

An office wide parameter, MCCS_SEQ_CALL_LIM, limits the number of MCCS sequence calls for each office. The parameter limits these calls to a customer set table limit. If a subscriber attempts to go beyond the permitted number of MCCS sequence calls for a specified office, announcement number 9 plays. This announcement plays to the calling subscriber. The call is taken down.

Exchange Alternate Billing Service (MCCS) (continued)

The call flow for limited sequence calls follows:

1. The subscriber makes one successful MCCS telephone call. The called party goes on-hook.
2. A sequence call counter is initialized to 0.
3. If the operating company set a limit of 0 MCCS sequence calls in office parameter MCCS_SEQ_CALL_LIM, the subscriber must initiate the call again. The subscriber dials 0+ (01+) called number plus the calling card number to initiate this call.
4. If the subscriber makes an MCCS sequence call, the sequence call counter is updated until the limit is reached. The limit is defined in the office parameter.
5. If the limit is reached and the subscriber continues to want to make sequence calls, announcement number 9 plays. The call is taken down.

Announcements

Associated and not required with MCCS is TOPS Alternate Announcement, OSB00101. This feature allows recording of customized differences of an announcement for any call state. The recording does not affect the announcement for any other call state. For example, a customized "Thank you" announcement can be present to include the name of the Operating Company. The system can also play this announcement on a first call. A non-customized "Thank you" announcement can play subsequently in the call sequence.

In the past, changing an announcement for one stage of the call meant that the announcement changed for all stages. In the previous paragraph, the announcement is not played on the first call only. The customized announcement plays for all stages of the call where the "Thank you" announcement was required.

Exchange Alternate Billing Service (MCCS) (continued)

This functionality applies to both Mechanized Calling Card Service (MCCS) and Automatic Coin Toll Service (ACTS) announcements.

MCCS announcements

Announcement number	Announcement	Explanation
1	PLEASE DIAL YOUR CARD NUMBER OR 0 FOR AN OPERATOR NOW.	Prompt announcement on a subscriber dialed MCCS call that uses the tone plus prompt announcement OST.
2	PLEASE DIAL YOUR CARD NUMBER AGAIN NOW. (pause) THE CARD NUMBER YOU HAVE DIALED IS NOT VALID.	A subscriber dialing error occurred on a subscriber dialed MCCS call.
3	PLEASE DIAL YOUR CARD NUMBER.	Prompt announcement after an error occurs and the alerting tone occurs
4	PLEASE HANG UP AND DIAL 0 PLUS THE NUMBER YOU ARE CALLING. (pause) THE CALLING CARD NUMBER YOU HAVE DIALED IS NOT VALID.	The caller entered a calling card number that is not correct and the error threshold was reached. The subscriber must hang up and reoriginate the call.
5	YOU MAY DIAL ANOTHER CALL NOW.	Prompt announcement on a subscriber dialed MCCS sequence call.
6	PLEASE DIAL THE NUMBER YOU ARE CALLING NOW. (pause) THE NUMBER YOU HAVE DIALED IS NOT CORRECT.	A subscriber dialing error occurs on a subscriber dialed MCCS sequence call.
7	PLEASE DIAL THE NUMBER YOU ARE CALLING.	Prompt announcement after an error occurs on a sequence call.

Note: * - The system does not currently support these announcements.

Exchange Alternate Billing Service (MCCS) (continued)

MCCS announcements

Announcement number	Announcement	Explanation
8	PLEASE HANG UP AND DIAL 0 PLUS THE NUMBER YOU ARE CALLING. (pause) THE NUMBER YOU HAVE DIALED IS NOT CORRECT.	An invalid called number was entered and the error threshold was reached. The subscriber must hang up and originate the call again.
9	PLEASE HANG UP AND DIAL 0 PLUS THE NUMBER YOU ARE CALLING.	Termination announcement after error threshold was reached without another number entry
10*	VALID NUMBER, UNRESTRICTED PIN, RAOXXX.	Reply to validation from the inside: Correct calling card number, not limited PIN, known RAO.
11*	VALID NUMBER, RESTRICTED PIN, RAO XXX.	Reply to validation from the inside: correct calling card number, not limited PIN, known RAO.
12*	VALID NUMBER, UNRESTRICTED PIN, RAO UNAVAILABLE.	Reply to validation from the inside: correct calling card number, not limited PIN, not known RAO.
13*	INVALID NUMBER, PLEASE DIAL AGAIN NOW.	Reply to validation from the inside: invalid calling card number.
14*	INVALID NUMBER, PLEASE HANG UP.	Reply to validation from the inside: invalid calling card number, error threshold reached.
15	PLEASE HANG UP AND DIAL DIRECT. (pause) THIS NUMBER CANNOT BE DIALED AS A SEQUENCE CALL.	Error announcement given when subscribers dial a new forward number that is limited as a sequence call.

Note: * - The system does not currently support these announcements.

Exchange Alternate Billing Service (MCCS) (continued)

MCCS announcements

Announcement number	Announcement	Explanation
16	THANK YOU.	This announcement applies to when the subscriber enters the card number correctly.
17	(alert tone)	Alert tone prompt for calling card dialing This prompt is a complex tone. This tone contains 60 ms DTMF tone (941/1477 Hz at -10dBm). A 940 ms of exponentially decayed dial tone 40/350 Hz with constant time of 200 ms, at the start at -10dBm) follows this tone.
Note: * - The system does not currently support these announcements.		

The sequence call timing parameters follow:

Sequence call timing parameters

Parameter number	Timing length (seconds)	Description
T1	5	First timing after MCCS for tone-only treatment.
T2	1	First timing after MCCS tone for tone-plus-prompt treatment.
T3	5	Timing after prompt announcement.
T4	3	Timing after error announcement.
T5	3	Timing after tone in error sequence.
T6	5	Timing after tone in error sequence.
T7	2	The system detects timing after # signal and before giving a sequence call prompt.
T8		Not used
T9	5	Total timing after fourth digit.
T10	6	Interfield timing on all calls.

Exchange Alternate Billing Service (MCCS) (continued)

Sequence call timing parameters

Parameter number	Timing length (seconds)	Description
T11		Not used
T12	2	Timing after fourth digit on MCCS call to distinguish PIN only.
T13	7	Interdigit timing on all calls.
T14		Not used
T15	10	Interdigit timing on all calls.

Verification

To verify activation and operation, conduct the following test calls:

1. Verify that all 0- and 1+ calls route normally for a line with MCCS service. Originate 0- and 0+ calls from the following call origination types. Verify all calls complete.
   - Coin
   - PBX - HOT
   - 1FR - DT
   - 1FR - ONI1
   - 1FR - DP
2. Verify that any originator with MCCS that disconnects after dialing 0+ and before the originator reaches a TOPS operator clears down correctly. Dial 0+, wait 1 s, and disconnect. Dial 0+ again, disconnect after 2 s, 3 sand 4 s. Dial 0+ from the following call origination types:
   - 1FR
   - Coin
   - Hotel

   Verify all calls clear down correctly on disconnect. Make 01+ calls to repeat the sequence. Make sure to use TONE and TONEANN to execute all tests.

3. With the DRAM facility not available, verify that when a subscriber dials 0+, the call routes to an operator. Make calls under the following conditions:

   - 1FR
   - Coin
   - Hotel

   Dial 0+ with DRAM not available. Verify that the call routes to an operator. Dial 0+. While you key in the destination code, fail DRAM and verify the call routes to an operator.

4. Verify if TOPS remote units are not available when an MCCS call originates. When this event occurs, make sure the calling party routes to a TOPS operator when a position becomes available. This event must occur when TOPS remote units are not available when an MCCS call originates. Make the following call types:

   - 1FR
   - Coin
   - Hotel

Translations table flow

Table flow is not provided.

Limits

The following limitations and restrictions apply to Exchange Alternate Billing Service (MCCS):

- Customer dialed on TOPS trunks:
  - — 0+ calls from hotels that require no charge messages route to an operator to obtain the number of the calling subscriber.
  - — MCCS occurs only for coin calls that arrive on trunks with Multiwink or Expanded Inband Coin Signaling. Calls that arrive on other circuits time out and route to an operator. This event occurs when the End Office (EO) disables the keypad when routing to an operator. Trunks from these offices must be entered for no service in the MCCSOST Table.
- Customer dialed on line:
  - — the line must be DTMF
  - — the calling number must be identified as ANI

Exchange Alternate Billing Service (MCCS) (continued)

— the call must be 0+ (01+)

— the line must be marked as MCCS compatible by the OST checks.

- Customer dialed sequence calls:

  — A basic interdigit timing of 5 s applies to a call. This action occurs when a subscriber makes a sequence call and begins to enter the called number. The interdigit timing of 5 s is timing parameter T9, that section Announcements describes. An error occurs when a subscriber takes longer than the interdigit timing period to enter a digit. The actions taken for error conditions that section Error Conditions describes occur. The asterisk (*) is a digit that is not correct. The asterisk causes MCCS announcement treatment.

  — Digits do not normally arrive when an announcement plays. If digits arrive when prompt announcement numbers 5, 6, and 7 play, the announcement terminates. When this action occurs, the system processes the digits. The system ignores digits entered while the termination announcement numbers 8, 9, and 15 play.

- Limit number of sequence calls:

  The subscriber can make a limited number of subscriber dialed MCCS calls before the subscriber enters the calling card number again. The maximum limit of calls is 127. Sequence calls are not allowed when the subscriber uses a restricted PIN.

Interactions

Exchange Alternate Billing Service (MCCS) does not have functionality interactions.

Activation/deactivation by the end user

This section indicates activation and deactivation for a customer that makes a first MCCS call and sequence calls.

Customer dialed on line and TOPS trunk

This section applies to customer dialed and operator assisted calls.

1. no subscriber-dialed MCCS service, a subscriber line routes to an operator
2. alerting tones
3. alerting tone plus prompt announcement

Subscribers that use telephones without MCCS, like rotary dial telephones, receive treatment 1. Subscribers that use telephones with MCCS and understand the service, like a DTMF telephone in a residence, receive

Exchange Alternate Billing Service (MCCS) (continued)

treatment 2. Subscribers that use telephones with MCCS and are not known with MCCS, like a public DTMF telephone, receive treatment 3.

For treatment 2 or 3, a subscriber can request an operator with any of the following:

- wait 5 s for a time-out
- flash the switchhook
- from a DTMF telephone, enter 0 or 0 + octothorpe (#) which causes an operator to attach

  Dialing 0 + and the octothorpe is required for MCCS before BCS19.

The system ignores digits that arrive when a prompt announcement or tone occurs. Two exceptions are present:

- if the digits arrive during announcements 1, 2, 3, 5, 6, or 7. Refer to section Announcements for a list of announcements.
- during the alert tone, the system processes the digits normally and the announcement tone terminates.

Also, 0- and 1+ calls can reach an operator. The CCV encompasses all types of originations where the called or calling party requests calling card billing.

When an operator is connected, the subscriber verbally tells the card number to the operator. The operator enters the number for validation.

If the subscriber does not want an operator, the subscriber enters a 14-digit calling card number. The subscriber enters a 4-digit PIN if the billing number is the same as the called number. If the subscriber enters a 4-digit PIN, the first digit cannot be 0 or 1. The called number cannot be INWATS, directory support, or overseas. The 800 is a correct NPA. The 800 is not correct when used in a calling card number. The system performs a format check on the entered number.

If the number passes the format check, the system requests a BVC request. This request occurs with the use of the CCIS network. If the calling number is correct, the system outpulses the number. When this event occurs, the "THANK YOU" announcement returns to the caller. If the BVC request is not successful, an additional link occurs between the subscriber and MCCS. Section Customer dialed on TOPS trunks, under subsections "Entering the calling card number", "Time-outs", and "Error conditions" describes this link.

Exchange Alternate Billing Service (MCCS) (continued)

Customer dialed sequence calls

When a caller makes an MCCS call, the calling subscriber waits for the called subscriber to go on-hook. This event occurs when the caller makes the call with a calling card and a PIN that is not restricted. When the called party goes on-hook, the subscriber enters an octothorpe (#) and a correct dialing sequence. A "THANK YOU" message plays to the subscriber. If the system can correctly translate the called number, the calling subscriber connects to the desired party. If the system cannot translate the called number, the subscriber connects to a standard tone or announcement. For variations on this scenario, refer to section "Customer dialed sequence calls".

Billing

With MCCS, Automatic Message Accounting (AMA records are modified as this section describes. For billing purposes, the following information on MCCS CCV is included:

- the Revenue Accounting Office (RAO) returned from the Billing Validation Center (BVC)
- if the calling card number is customer-dialed or operator-assisted
- if the BVC was accessed successfully

Do not record the 4-digit PIN section of the calling card number. The PIN was deleted for security reasons. The three RAO digits replace the PIN, followed by one information digit, as follows:

- 0 - BVC validated, customer-dialed
- 1 - BVC validated, operator-assisted
- 2 - BVC failure, customer-dialed
- 3 - BVC failure operator-assisted

The term BVC validated indicates that a Direct Signaling query to the billing Validation Center validates the calling card. This term also indicates that a correct RAO is present. If this condition does not occur, BVC failure is implicit and the RAO value is 000.

This method of recording calling card validation information does not require format changes to the current EO AMA entry. This entry is where the system records special billing numbers. The understanding of the last 4 digits of the 14-digit special number changes. This understanding changes when the special number is a domestic credit card and the billing office is equipped for MCCS.

Exchange Alternate Billing Service (MCCS) (continued)

These modifications apply to customer-dialed and operator-assisted MCCS calls.

Station Message Detail Recording

Exchange Alternate Billing Service (MCCS) does not affect Station Message Detail Recording.

Datafilling office parameters

Exchange Alternate Billing Service (MCCS) does not affect office parameters.

The office parameters that Exchange Alternate Billing Service (MCCS) uses appear in the following table. For additional information about office parameters, refer to *Office Parameters Reference Manual*.

Office parameters by Exchange Alternate Billing Service (MCCS)

Table name	Parameter name	Explanation and action
OFCOPT	TOPS_MCCS_CCV	This parameter specifies if MCCS applies to TOPS operator-handled calling card billing. The values are Y and N. When this functionality is first provided to the operating company during office commissioning or office extension, the NT must engineer this parameter. The NT must engineer this parameter to a value of No(N), first inhibiting application. Calling card validation occurs by the old method. The old format is by optional format checks of the number or by TOPS operator-initiated validation from the inside. When the TOPS operators prepare to begin MCCS calling card validation, this functionality activates when the office parameter changes to a value of Yes (Y). When on-site testing of this functionality is a requirement, this functionality activates when the office parameter changes to a value of Yes (Y). When operational, any future BCS upgrading of the office requires that this parameter be dumped and restored.

Exchange Alternate Billing Service (MCCS) (continued)

Office parameters by Exchange Alternate Billing Service (MCCS)

Table name	Parameter name	Explanation and action
OFCENG	TOPS_MCCS_BNS	Enter Y to enable billed number screening.
OFCVAR	MCCS_SEQ_CALL_LIM.	This parameter limits the number of MCCS sequence calls per office. If a subscriber attempts to go beyond the permitted number of MCCS sequence calls for a specified office, announcement number 9 plays. When this event occurs, the call is taken down. The subscriber must enter the calling card number again. The subscriber must enter this number again with the same rules in which the subscriber first correctly entered the calling card number. Refer to section Announcements for a list of announcements. The range is 0 to 127 and the default is 127.

Datafill sequence

The tables that require datafill to implement Exchange Alternate Billing Service (MCCS) appear in the following table. The tables appear in the correct entry order.

Datafill requirements for Exchange Alternate Billing Service (MCCS)

Table	Purpose of table
CLLI	Common Language Location Identifier for the far end of each announcement, tone, or trunk group
OPRTRANS	Operator Translations defines the serving NPA, screening, and pretranslator by call type.
TOPS	Digit translation routing to TOPS
TOPSAMA	TOPS Automatic Message Accounting indicates which not answered call types to put on AMA tape
STDPRTCT.STDPRT	Standard Pretranslator specifies a Pretranslator name (identified PRTNM) other than NPRT (no translator).
MCCSOST	Mechanized Calling Card Service Originating Station Treatment specifies treatment for MCCS calls from coin and private telephones
ANNS	Announcements contains data for each announcement, analog and digital, assigned in the switching unit.

Exchange Alternate Billing Service (MCCS) (continued)

Datafill requirements for Exchange Alternate Billing Service (MCCS)

Table	Purpose of table
ANNMEMS	Announcement Members lists the assignments for each of the members assigned to the announcements in table ANN
RECEIVER	Receiver defines receivers and contains information on multifrequency receiver
DRAMS	Digital Recorded Announcement Machine lists information for the trunk cards (maximum 9) that constitute a DRAM.
DRMUSERS	Digital Recorded Announcement Machine Users lists all announcements and includes the facility to specify the prime language for announcements.
TOPLNDIS	TOPS Line Display associates a direct line to TOPS with a TOPS trunk group by means of a line attribute index.

Datafilling table CLLI

Datafill for Exchange Alternate Billing Service (MCCS) for table CLLI appears in the following table. The fields that apply to Exchange Alternate Billing Service (MCCS) appear in this table. See the data schema section of this document for a description of the other fields.

Datafilling table CLLI

Field	Subfield or refinement	Entry	Explanation and action
CLLI		alphanumeric (a maximum of 16 characters)	Common language location identifier. This table does not change. Identify the far end of each announcement, tone or trunk group.

Datafill example for table CLLI

Sample datafill for table CLLI appears in the following example.

MAP example for table C LLI

```
CLLI      ADNUM   TRKGRSIZ                          ADMININF
-------------------------------------------------------------
DRAM0      1      12      DIGITAL, RECORDER, ANNOUNCER, 0
DRAM1      2      32      DIGITAL, RECORDER, ANNOUNCER, 1
DRAM2      3      32      DIGITAL, RECORDER, ANNOUNCER, 2
RCVRMF     4       50      MF, RECEIVER
MCCSDRAM   5       60      MCCS, ANNOUNCEMENTS
RCVRMCCS   6       64      MCCS, DIGITONE, RECEIVERS
```

Exchange Alternate Billing Service (MCCS) (continued)

Datafilling table OPRTRANS

The Operator Translations (OPRTRANS) Table defines the serving NPA, screening and pretranslator according to the type of call. The call type is the key into the table.

Datafill for Exchange Alternate Billing Service (MCCS) for table OPRTRANS appears in the following table. The fields that apply to Exchange Alternate Billing Service (MCCS) appear in this table. See the data schema section of this document for a description of the other fields.

Datafilling table OPRTRANS

Field	Subfield or refinement	Entry	Explanation and action
KEY		OPERATOR SPLVFY VERIFY DELAY MCCS or OVERSEAS	Key to table. Enter the call type originated from the TOPS position. The following are notes on these values: • The system uses VERIFY, SPLVFY, DELAY and OVERSEAS when the TOPS operator dials the digits for these types of calls. • The system uses OPERATOR when the TOPS operator dials the digits for manually originated operator calls (for example zero-minus assist) and zero-minus MCCS calls. The system also uses OPERATOR when the subscriber dials initial zero-plus MCCS calls. • The system uses MCCS when the subscriber dials sequential (subsequent) zero-plus MCCS calls.

Datafill example for table OPRTRANS

Sample datafill for table OPRTRANS appears in the following example.

MAP example for table OPRTRANS

```
KEY        SNPA    SCRNCL    PRTNM    LCANAME
-------------------------------------------------------
OPERATOR    412     NSCR     T008     NLCA
VERIFY      412     NSCR     T006     NLCA
SPLVFY      412     NSCR     T008     NLCA
DELAY       412     NSCR     T009     NLCA
MCCS        412     NSCR     NPRT     NLCA
OVERSEAS    412     NSCR     NPRT     NLCA
```

Datafilling table TOPS

The Traffic Operator Position System (TOPS) Table describes the digit translation routing to TOPS. This table handles MCCS manual inward validation calls.

Datafill for Exchange Alternate Billing Service (MCCS) for table TOPS appears in the following table. The fields that apply to Exchange Alternate Billing Service (MCCS) appear in this table. See the data schema section of this document for a description of the other fields.

Datafilling table TOPS

Field	Subfield or refinement	Entry	Explanation and action
			This table does not change.

Datafill example for table TOPS

Sample datafill for table TOPS appears in the following example.

Exchange Alternate Billing Service (MCCS) (continued)

MAP example for table TOPS

```
CO        DISPLAY   NOAMA   POSTYPE
-------------------------------------------------------
UNSPEC     S          N      GEN
OH         C          N      GEN
OA         S          N      GEN
DD         S          N      GEN
CAMA       S          N      GEN
RCAMA      S          N      GEN
DELAY      S          N      GEN
121        S          N      GEN
131        S          N      GEN
141        S          N      GEN
```

Datafilling table TOPSAMA

The Traffic Operator Position System Automatic Message Accounting (TOPSAMA) table allows an operating company to select which unanswered TOPS calls the system places on AMA tape. The operating company selects the calls by call type. This table handles MCCS manual inward validation calls.

Datafill for Exchange Alternate Billing Service (MCCS) for table TOPSAMA appears in the following table. The fields that apply to Exchange Alternate Billing Service (MCCS) appear in this table. See the data schema section of this document for a description of the other fields.

Datafilling table TOPSAMA

Field	Subfield or refinement	Entry	Explanation and action
			This table does not change.

Datafill example for table TOPSAMA

Sample datafill for table TOPSAMA appears in the following example.

Exchange Alternate Billing Service (MCCS) (continued)

MAP example for table TOPSAMA

```
CO        TOT     RECNOANS
--------------------------------------------------------
UNSPEC    00      N
ON        03      N
OA        02      N
DD        01      N
CAMA      01      N
```

Datafilling subtable STDPRTCT.STDPRT

The Standard Pretranslator (STDPRTCT.STDPRT) Subtable is the first table that the received leading digits index. The originating line attribute table (LINEATTR) or trunk table (TRKGRP) provide these digits. This subtable specifies a Pretranslator name (identified PRTNM) other than NPRT (no translator).

Datafill for Exchange Alternate Billing Service (MCCS) for table <NAME> appears in the following table. The fields that apply to Exchange Alternate Billing Service (MCCS) appear in this table. See the data schema section of this document for a description of the other fields.

Datafilling table STDPRTCT

Field	Subfield or refinement	Entry	Explanation and action
PRETRTE	PRERTSEL	N	Pretranslator route selector. Use of a T selector causes an override of previously collected table data. Do not use this selector or inappropriate call routings can occur. Use the N selector instead.

Datafill example for subtable STDPRTCT.STDPRT

Sample datafill for table STDPRTCT.STDPRT appears in the following example.

MAP display example for subtable STDPRTCT.STDPRT

```
FROMDIGS    TODIGS                                  PRETRTE
--------------------------------------------------------------
2           9                                  N  DD  0  NA
```

Exchange Alternate Billing Service (MCCS) (continued)

Datafilling table MCCSOST

The Mechanized Calling Card Service Originating Station Treatment (MCCSOST) Table contains one entry for each incoming or two-way TOPS trunk group in an office. The first part of the entry applies to calls that originate on coin telephones. The second part applies to calls that originate on private telephones.

Datafill for Exchange Alternate Billing Service (MCCS) for table MCCSOST appears in the following table. The fields that apply to Exchange Alternate Billing Service (MCCS) appear in this table. See the data schema section of this document for a description of the other fields.

Datafilling table MCCSOST

Field	Subfield or refinement	Entry	Explanation and action
			This table does not change.

Datafill example for table MCCSOST

Sample datafill for table MCCSOST appears in the following example.

MAP example for table MCCSOST

```
CLLI            PUBLIC   PRIVATE       STAT       OST
-------------------------------------------------------
WRAP100200IN    SERV     TONEANN       SERV       TONE
CHQH789INSP     SERV     TONEANN       SERV       TONE
EVCL791INSP     SERV     TONEANN       SERV       TONE
EVCL538INSP     SERV     TONEANN       SERV       TONE
HRVL735INSP     SERV     TONEANN       SERV       TONE
MRDM482INSP     SERV     TONEANN       SERV       TONE
NIXN586INSP     SERV     TONEANN       SERV       TONE
NWSN894INSP     SERV     TONEANN       SERV       TONE
PRKR399INSP     SERV     TONEANN       SERV       TONE
```

Datafilling table ANNS

The Announcements (ANNS) Table contains data for each announcement, analog and digital, assigned in the switching unit.

The datafill for Exchange Alternate Billing Service (MCCS) for table ANNS appears in the following table. Only the fields that apply directly to Exchange

Alternate Billing Service (MCCS) appear in the table. For a description of the other fields, refer to the data schema section of this document.

Datafilling table ANNS

Field	Subfield or refinement	Entry	Explanation and action
			This table does not change.

Datafill example for table ANNS

Sample datafill for table ANNS appears in the following example.

MAP example for table ANNS

```
CLLI      ANTYPE   TRAFSNO   MAXCONN    CYTIME       MAXCYC
-------------------------------------------------------------
MCCSDRAM  MCCS     85        1          0            1
```

Datafilling table ANNMEMS

The Traffic Operator Position System Automatic Message Accounting (TOPSAMA) table allows an operating company to select which unanswered TOPS calls the system places on AMA tape. The operating company selects the calls by call type. This table handles MCCS manual inward validation calls.

Datafill for Exchange Alternate Billing Service (MCCS) for table ANNMEMS appears in the following table. The fields that apply to Exchange Alternate Billing Service (MCCS) appear in this table. See the data schema section of this document for a description of the other fields.

Datafilling table ANNMEMS

Field	Subfield or refinement	Entry	Explanation and action
			This table does not change.

Datafill example for table ANNMEMS

Sample datafill for table ANNMEMS appears in the following example.

Exchange Alternate Billing Service (MCCS) (continued)

MAP example for table ANNMEMS

```
ANN       MEM   HDWTYPE   CARD      TRCKLIST
-------------------------------------------------------
MCCSDRAM  0     DRAM      DRA       0  MTM  0   2
MCCSDRAM  1     DRAM      DRA       0  MTM  13  2
MCCSDRAM  2     DRAM      DRA       0  MTM  0   4
             .
             .
             .
MCCSDRAM  53    DRAM      DRA       0  MTM  13   27
MCCSDRAM  54    DRAM      DRA       0  MTM  0    29
MCCSDRAM  55    DRAM      DRA       0  MTM  13   29
```

Datafilling table RECEIVER

The RECEIVER Table defines receivers. This table also contains information on multifrequency receiver.

Datafill for Exchange Alternate Billing Service (MCCS) for table RECEIVER appears in the following table. The fields that apply to Exchange Alternate Billing Service (MCCS) appear in this table. See the data schema section of this document for a description of the other fields.

Datafilling table RECEIVER

Field	Subfield or refinement	Entry	Explanation and action
RCVRKEY	CLLI	RCVRMF	Receiver key. For MCCS, the receiver is multifrequency, enter RCVRMF.

Datafill example for table RECEIVER

Sample datafill for table RECEIVER appears in the following example.

Exchange Alternate Billing Service (MCCS) (continued)

MAP example for table RECEIVER

```
RCVKEY   RCVRTYPE   TMTYPE    TMNO   TMCKTNO   CARCODE
-------------------------------------------------------
RCVRMF   0          D         MTM    6         0
RCVRMF   1          D         MTM    6         1
RCVRMF   2          D         MTM    6         2
            .
            .
            .
RCVRMF   6          D         MTM    10        2
RCVRMF   7          D         MTM    10        3
RCVRMF   8          D         MTM    14        0
```

Datafilling table DRAMS

The Digital Recorded Announcement Machine (DRAM) Table lists information for the trunk cards. The DRAM table contains information for a maximum of 9 trunk cards. These cards constitute a DRAM. Each DRAM has a number in the range of 0 to 63. Each DRAM contains one DRAM Controller Card (Peripheral Equipment Code NT1X75AA or NT1X75BA) and one or more Prerecorded Message, Recordable Memory or Electrically Eraseable (EEPROM) Memory cards. These cards are on a Maintenance Trunk Module. Each card number must specify the card type, Controller (CTLR), Prerecorded Messages (PROM), or Recordable Memory (RAM).

Datafill for Exchange Alternate Billing Service (MCCS) for table DRAMS appears in the following table. The fields that apply to Exchange Alternate Billing Service (MCCS) appear in this table. See the data schema section of this document for a description of the other fields.

Datafilling table DRAMS

Field	Subfield or refinement	Entry	Explanation and action
			This table does not change.

Datafill example for table DRAMS

Sample datafill for table DRAMS appears in the following table.

Exchange Alternate Billing Service (MCCS) (continued)

MAP example for table DRAMS

```
DRAM DRAM CARD TMTYPE TMNO TMCKT CARDCODE CARDINFO CARD
-----------------------------------------------------
0    0    0    MTM    9    0     1X75AA   CTLR     DRAMO
0    0    1    MTM    9    2     1X76AA   PROM     (0)$
1    0    2    MTM    9    4     1X77AA   RAM      (1)$
1    0    3    MTM    9    6     1X77AA   RAM      (2)$
1    0    4    MTM    9    8     1X77AA   RM       (3)$
2    1    0    MTM    0    0     1X75BA   CTLR     DRAM1
2    1    1    MTM    0    2     1X76CA   PROM    (0)(1)$
3    2    0    MTM    13   0     1X75BA   CTLR     DRAM2
3    2    1    MTM    13   2     1X76CA   PROM    (0)(1)$
```

Datafilling table DRMUSERS

The Digital Recorded Announcement Machine Users (DRMUSERS) table lists all the announcements a user requires. This list allows the operating company to specify the prime language for announcements. Before any phrase can enter the DRMUSERS Table, the DRAMREC facility must assign the phrase.

Datafill for Exchange Alternate Billing Service (MCCS) for table DRMUSERS appears in the following table. The fields that apply to Exchange Alternate Billing Service (MCCS) appear in this table. See the data schema section of this document for a description of the other fields.

Datafilling table DRMUSERS

Field	Subfield or refinement	Entry	Explanation and action
			This table does not change.

Datafill example for table DRMUSERS

Sample datafill for table DRMUSERS appears in the following example.

MAP example for table DRMUSERS

```
CLLI       ANNUM   PHRASES    PHSLIST   CONTMARK
-----------------------------------------------
MCCSDRAM    10     MCCS10ENG  RAOENG     $
```

Datafilling table TOPLNDIS

The TOPS Line Display table (TOPLNDIS) associates a direct line to TOPS with a TOPS trunk group by means of a line attribute index.

Datafill for Exchange Alternate Billing Service (MCCS) for table TOPLNDIS appears in the following table. The fields that apply to Exchange Alternate Billing Service (MCCS) appear in this table. See the data schema section of this document for a description of the other fields.

Datafilling table TOPLNDIS

Field	Subfield or refinement	Entry	Explanation and action
			This table does not change.

Datafill example for table TOPLNDIS

Sample datafill for table TOPLNDIS appears in the following example.

MAP example for table TOPLNDIS

```
TLNKEY              CLLI
-----------------------------------------------------
TOPS                SYLV766INCA
```

Tools for verifying translations

Exchange Alternate Billing Service (MCCS) does not use translation verification tools.

SERVORD

Exchange Alternate Billing Service (MCCS) does not use SERVORD.

Exchange Alternate Billing Service - Canada

Ordering codes

Functional group ordering code: ABS00101

Functionality ordering code: does not apply

Release applicability

BCS36 and later versions

Requirements

To operate, Exchange Alternate Billing Service - Canada has the following requirements:

- BAS Generic, BAS00003
- Operator Services Basic, OSB00101, and table TOPSFTR parameter TOPS_ON_OFF_SWITCH = Y
- TEL CCS7 Base, TEL00008

Description

The following features provide this functionality:

Feature number	Feature name
NC0021	TOPS Terminating Code Screening
CV06038	Terminating Code Screening for Sequence Calls
AF0737	ACCS Enhancements
AF1251	Automatic Call Gapping
BK08865	Calling Card Screening Enhancements (BCS36)

NC0021 - TOPS Terminating Code Screening

This feature allows the operating company to screen calling card calls that originate from coin stations. The operating company can screen customer dialed and operator input calling card calls.

Terminating Code Screening helps to screen fraudulent calls caused by the adjustment in calling card numbers.

Exchange Alternate Billing Service - Canada (continued)

Tables OVSBILL, DOMBILL, and TERMSCRN perform the screening. The tables screen calls based on the following:

- The calling number
- The called country/region code or NPA-NXX.

If a screened call matches the correct data in the tables, the system identifies the call as terminating code screened compromised.

CV06038 - Terminating Code Screening for Sequence Calls

Effective BCS32, an Automatic Calling Card Service (ACCS) or Mechanized Calling Card Service (MCCS) calling card sequence call that originates from a coin telephone can use Terminating Code Screening.

AF0737 - ACCS Enhancements

Provides enhancements to messaging between the office and the data base for ACCS calls using CCS7 for LIDB queries.

Note: Package EABS, ABS00101, also includes this feature.

AF1251 - Automatic Call Gapping

Provides Automatic Call Gapping (ACG) control for ACCS. An ACG message indicates the rate at which the system sends queries for a specified NPA-NXX to the LIDB. This feature provides ACG control for LIDB overload condition only.

Note: Package EABS, ABS00101, also includes this feature.

BK08865 - Calling Card Screening Enhancements (BCS36)

This PRSDOC can prevent call completion when a subscriber attempts to complete a call on one interexchange carrier (IEC) with a calling card restricted to another IEC.

Note: This PRSDOC is also in TICS, OSEA0101, and EABS, ABS00101.

Operation

This section describes how TOPS Terminating Code Screening operates.

Background

This feature helps to screen fraudulent calls caused by the adjustment in calling card numbers.

For example, a student from country X overhears a calling number at the airport. The student posts the number on a bulletin board at a university

residence. That weekend, twelve students place calls to country X from pay telephones around the university. The students place the calls with the posted calling card number that continues to be correct.

Most fraudulent calls of this type are to specified countries or areas in a country from a specified pay telephone. This feature allows the operating company to screen calls that can be fraudulent calls at the Service Switching Point (SSP). The system identifies these calls as a compromised calling card.

Types of Calling Card calls

The following are the 3 types of Calling Card calls:

- Customer dialed

  Customer dialed calling card calls made from coin telephones identified as terminating code screened compromised route to a Traffic Operator Position System position (TOPS). When routed, the system marks the call as calling card compromised at the position.

- Operator dialed

  A customer can dial the operator at a TOPS position and quote the calling card number to the operator. The operator inputs the calling card number with SPL CLG. After the operator enters the calling card number, terminating code screening occurs. If the call is calling card compromised, the position marks the card as compromised.

- Compromised calling

  Compromised calls are calls that the system has terminating code screened. The system limits the calls based on the datafill in the screening tables.

  — Any calls that this feature screens and finds compromised must obtain a different billing means like third party or collect.

  — Every calling card call that originates from a pay telephone is terminating code screened. These cards include calling cards that the operator enters. This process screens calls where the customer does not dial the calling card code and quotes the code to the operator.

  — The operator cannot float the call without a different billing source. If an operator attempts to float a compromised call, the RES field continues to flash.

  — The system generates a TOPS116 log for each compromised call.

Types of database services available

Table CCVPARMS determines database services. Table CCVPARMS controls launching of database queries. The format of the table follows:

Exchange Alternate Billing Service - Canada (continued)

MAP example for table CCVPARMS

```
IDX                                VALAREA
-----------------------------------------
  0            LIDB  $ N   2 N  0   0
 10            LIDB  $ N   2 N  0  10
297                                 BVC
298                                 SDB
299                                 BLK
300                               MANUAL
```

The available validation types follow:

- MANUAL - An operator requires inward validation on the call.
- BLK - An alternate billing number indexes table BNSPARMS. The system blocks alternate billing to this number.
- SDB - Validation by network services database
- LIDB - Validation by line information database
- BVC - Billing validation center

For automatically queried calling cards, the system does not perform database queries if an entry in CCVPARMS for this calling number is BLK. In this event, the system does not launch queries and does not perform terminating code screening.

Interactions with existing Calling Card checks

Table HOTLIST contains calling card numbers identified as potential fraud numbers. If a calling card number matches an entry in table HOTLIST, the SPL number appears with HOT. The system does not launch database queries when a number appears as HOT. Table HOTLIST does not identify CCITT calling cards as HOT because CCITT cards do not fit in the table.

For every database type, the system checks table HOTLIST before the system performs database queries. If a number is HOT, the system does not perform terminating code screening. The system performs terminating code screening only on a correct database query.

Exchange Alternate Billing Service - Canada (continued)

Calling Card services

The following paragraphs discuss calling card services.

- ACCS

  When a customer makes an ACCS call, the calling card number forwards from the Service Switching Point (SSP) to the Service Control Point (SCP). This process is part of the Transaction Capability Application Part (TCAP) query. If the reply to the query is correct, the system applies terminating code screening to the calling card. An example of a correct query reply is a correct calling card number.

  Common Channel Signaling number 7 (CCS7) is for signal control of ACCS calls. The LIDB and SDB associate with CCS7.

  For customer dialed ACCS calls, if the call is terminating code screened compromised, the call routes to the operator. The system marks the call as terminating code screened.

- MCCS

  Common Channel Signaling number 6 (CCS6) is for signal control of MCCS calls. The BVC associates with CCS6.

  The MCCS system performs the calling card query to the BVC. If the query to the BVC passes, the system starts terminating code screening. An example of a query that passes is a correct calling card in the BVC database. The system does not launch database queries if an entry in table CCVPARMS for this calling number is BLK.

  For customer dialed MCCS calls, if the call is terminating code screened compromised, the call routes to the operator and is marked as terminating code screened.

- MANUAL (Operator Assisted)

  For manual validation of calling card calls, the customer dials the operator and quotes the calling card number. Manual validation also occurs when the customer enters the calling card. For manual validation, the call routes to the operator. In either event, terminating code screening of the call occurs before the verification of the calling card. If the system identifies the call as compromised, verification is not necessary. The system cannot bill the call. The operator can obtain an alternate billing method, like third or collect, and float the call.

  In the event of customer entered calling card numbers, the system performs terminating code before the call routes to the operator. If the call is an

Exchange Alternate Billing Service - Canada (continued)

adjustment, the system marks the call as terminating code screened when the call comes to the position.

For customer quoted calling cards, the system performs terminating code screening immediately after the operator enters the calling card number. If the call is an adjustment, the system marks the call before verification can occur.

Calling Card Types

The calling card service and the type of calling card determine terminating code screening. A customer can use one of three types of calling cards. The calling card types are overseas, domestic and CCITT.

This feature supports screening of domestic and CCITT format calling card types. This feature does NOT support overseas calling cards because the calling card services do not recognize the overseas format. The system does not launch queries to the database in the occurrence of ACCS/MCCS calls that use overseas calling cards.

Overseas calling cards are not terminating code screened.

BCS32 Sequence Call Enhancement

This enhancement allows ACCS/MCCS calling card sequence calls that originate from coin telephones to be Terminating Code Screened. The same conditions that applied to other types of calls that were candidates for Terminating Code Screening before, now apply to sequence calls.

When a sequence call is Terminating Code Screened and compromised, the caller receives a message. The message asks the caller to hang up and dial direct. The call disconnects. The call is Terminating Code Screened and marked as compromised. If the caller now dials the call as 0+ or 0-, the call routes to an operator. The operator informs the caller that an alternate method of billing is necessary.

Automatic Call Gapping

The AF1251 provides network management functions to reduce the amount of query data. The ACCS application sends this data during a LIDB overload condition. When the LIDB becomes overloaded, the system informs the ACCS application. The mechanism to instruct the application to reduce traffic

Exchange Alternate Billing Service - Canada (continued)

is an Automatic Call Gapping (ACG) message. The ACG specifies the rate that the system must release queries to the LIDB for a specified NPA-NXX.

- Office parameters control automatic call gapping. These office parameters are TOPS_ACCS_AGS and TOPS_ACCSACG_SIZE.
- Parameter TOPS_ACCS_AGS enables Automatic Call Gapping (ACG).
- Parameter TOPS_ACCS_SIZE affects the operating quality of ACG.

Operation

This section describes how to handle calling card calls.

ACCS/MCCS Call

Refer to the following flowchart to verify the calling card. Use the appropriate database.

Exchange Alternate Billing Service - Canada (continued)

Flowchart for ACCS/MCCS call

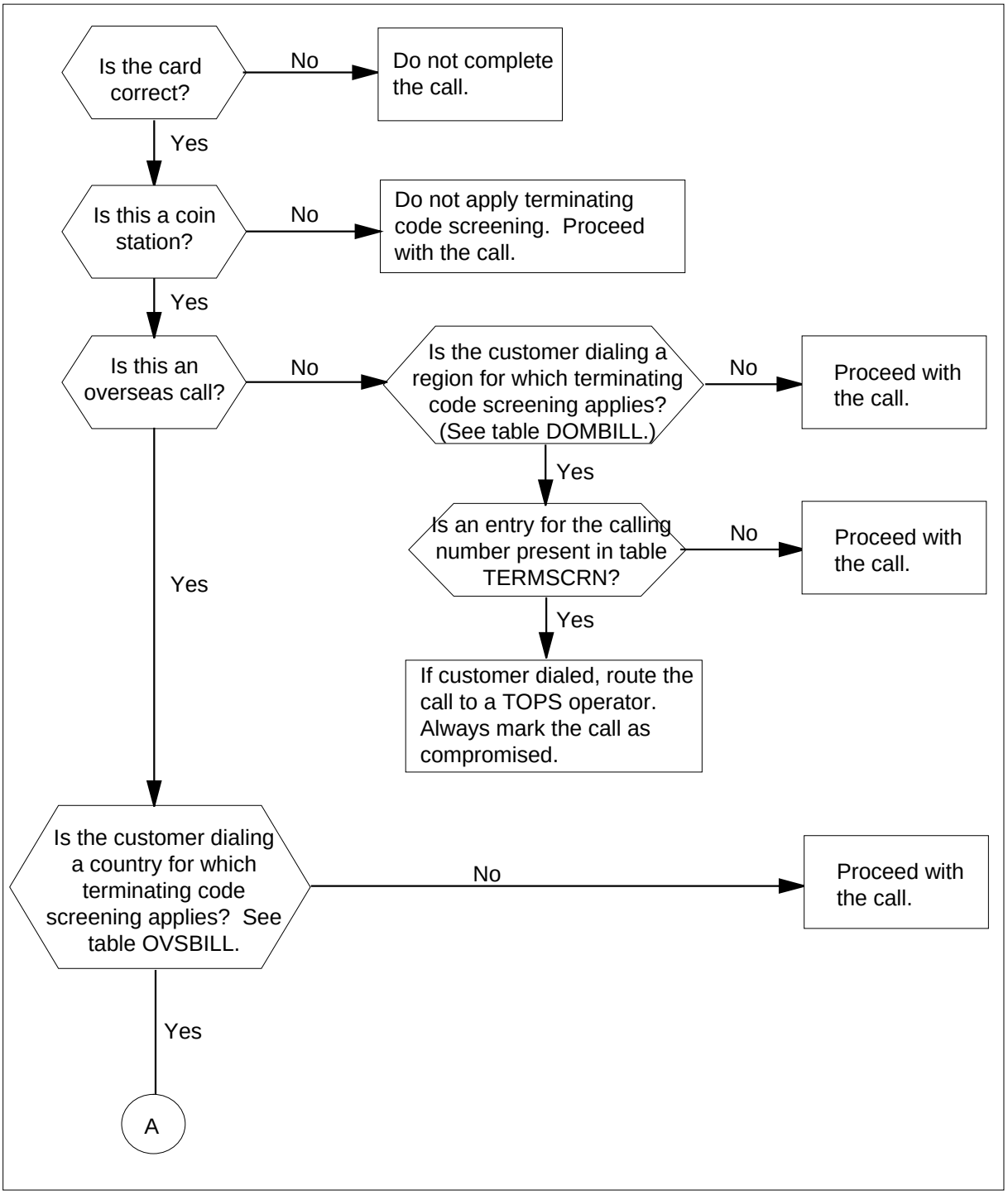

Exchange Alternate Billing Service - Canada (continued)

Flowchart for ACCS/MCCS call (continued)

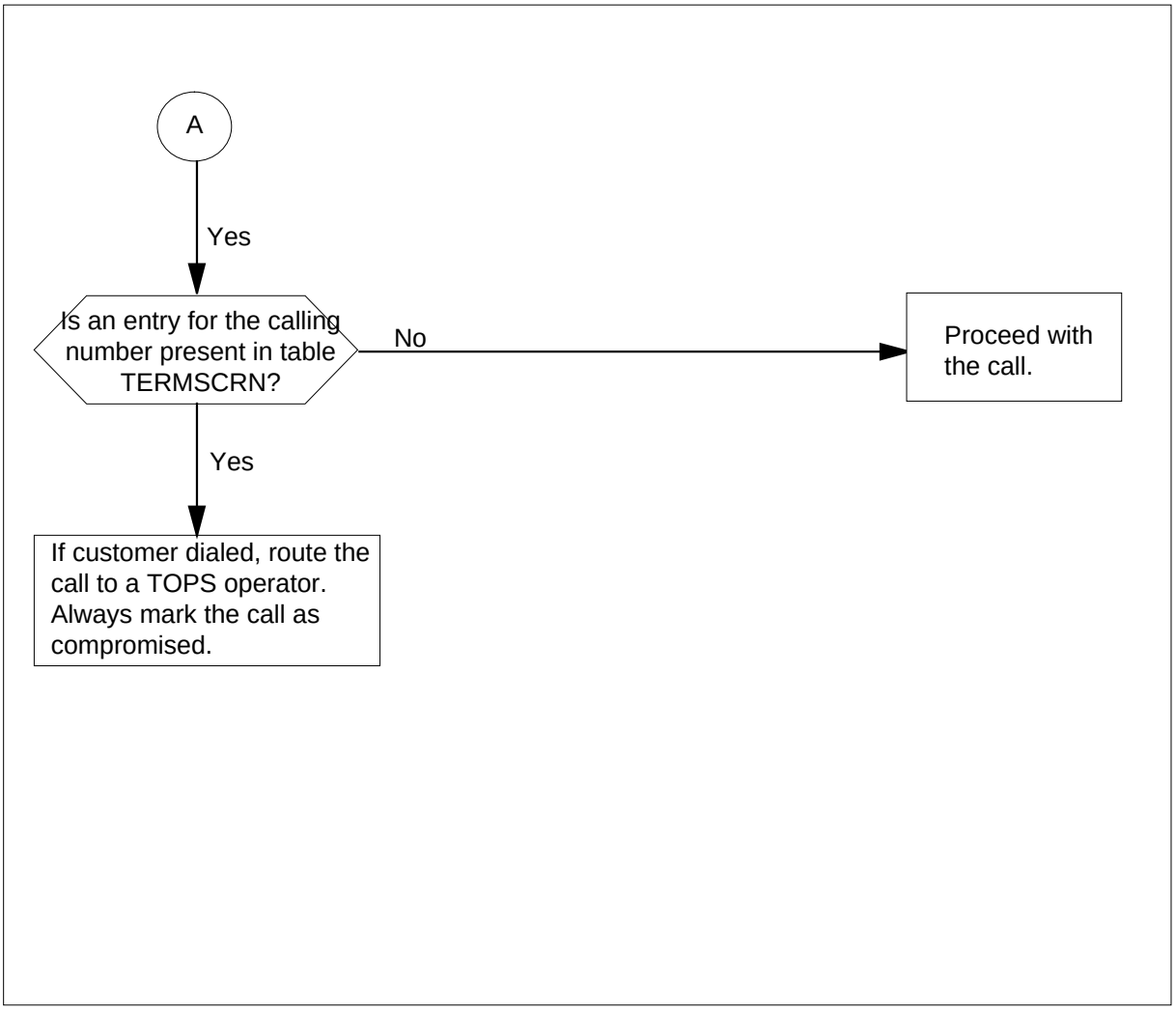

Manual Calling Card Call

The operator performs the calling card validation manually after entry of the calling card number. The operator verifies only calls that are NOT terminating code screened compromised. The system does not launch database queries if the calling card number matches an entry in table HOTLIST. The system does not launch database queries if an entry in table CCVPARMS for this calling number is BLK.

The system performs terminating code screening immediately after the database query starts. In the event that a call is terminating code screened, the appropriate screen display appears.

Exchange Alternate Billing Service - Canada (continued)

Customer Dialing Calling Card

The following flowchart is for customer dialing calling card calls.

Exchange Alternate Billing Service - Canada (continued)

Flowchart for customer dialing calling card call

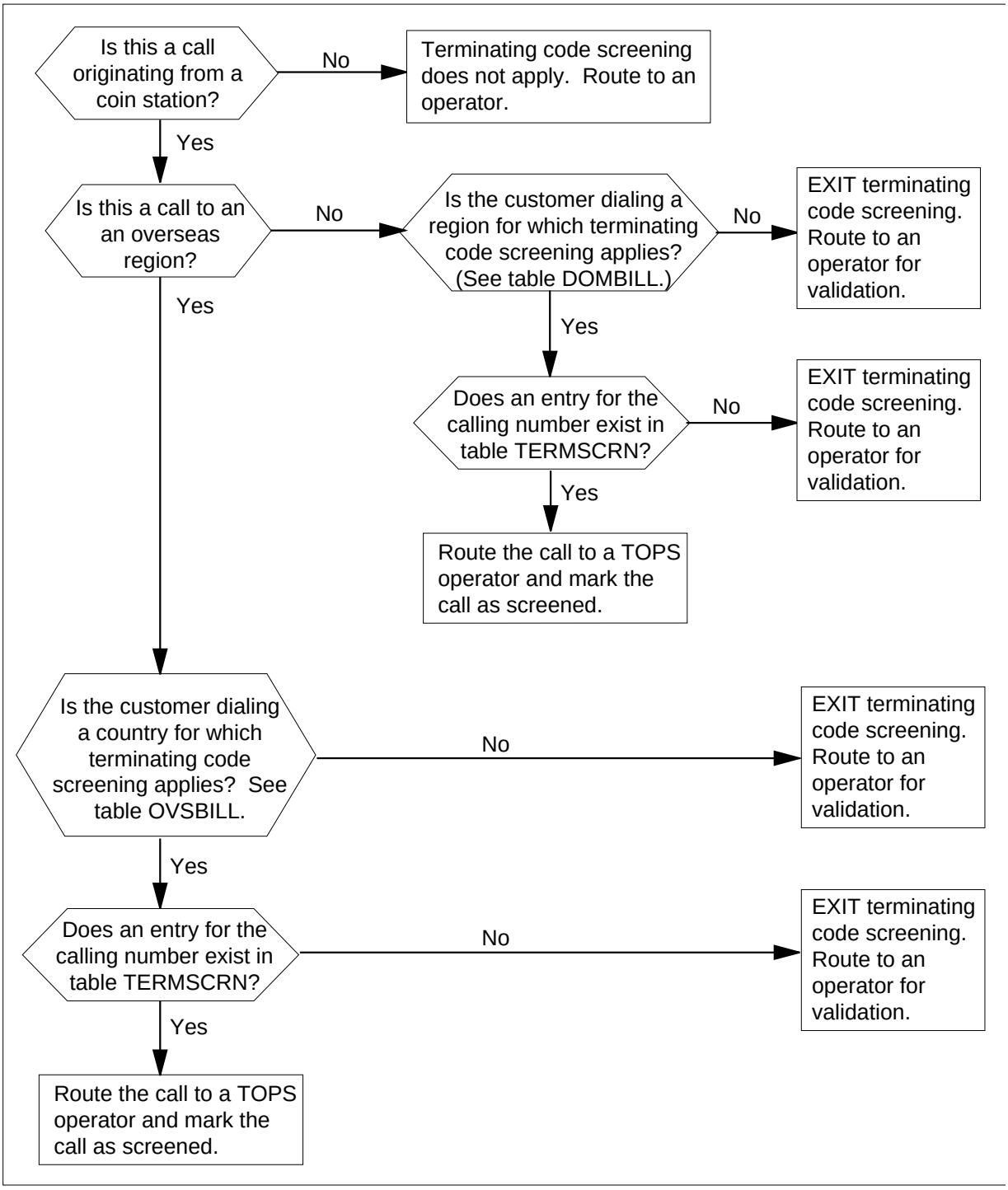

Exchange Alternate Billing Service - Canada (continued)

Customer Quoted Calling Card

The following flowchart is for customer dialing calling card calls.

Exchange Alternate Billing Service - Canada (continued)

Flowchart for customer quoted calling card call

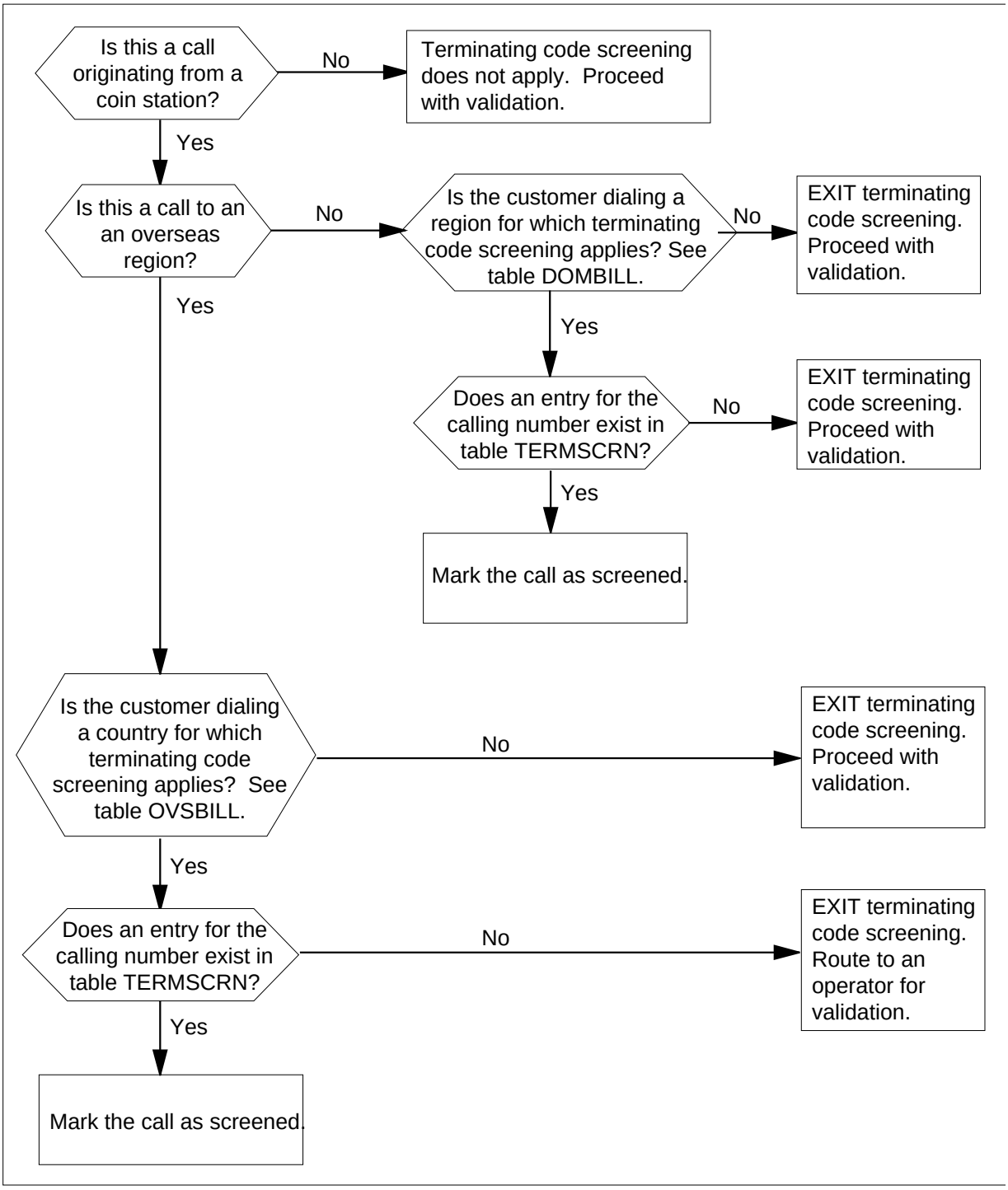

Exchange Alternate Billing Service - Canada (continued)

BK08865 - Calling Card Screening Enhancements (BCS36)

This PRSDOC prevents call completion when a subscriber attempts to complete a call on one interexchange carrier (IEC) using a calling card limited to another IEC.

Background

Before this PRSDOC, the Operating Company did not have the capability to perform carrier related calling card screening. This type of screening blocks call completion of specified IEC calls. This screening blocks IEC calls billed to a calling card that is limited from one or more carriers.

At this time, many Independent Operating Companies (IOC) complete intra-LATA and inter-LATA operator calls. Independent IOCs complete Local Exchange Carrier (LEC) calls and IEC calls on behalf of IEC companies. Many of these calls are calling card calls. To complete calling card calls, the calling card number is collected from the calling subscriber. The IOCs use Signaling System 7 (SS7) to launch a query in the nationwide Line Information Data Base (LIDB). This action validates the calling card number.

The introduction of Card Issuer Identifier cards (CIID) causes the IOCs difficulty. These cards bill an IEC call that is complete for an IEC other than the issuing card company. The issuing card company can refuse to accept billing for these calls. Equal problems are present for specified issued CCITT calling cards and LEC calling cards.

To prevent this loss of revenue, the IOCs turned off automatic validation of CIID cards for LEC and IEC calls. Calls made with these cards connect to an operator.

If the call is an IEC call and the carrier is not an allowed carrier, the call cannot complete with that calling card/carrier group. If the call is an LEC call, the operator manually validates the card.

Overview

At this time, manual validation satisfies the current limit of blocking calls on one IEC with a calling card limited to another IEC. With manual validation, AWT increases, and expenses for the Operating Company increase. This PRSDOC performs automatic calling card/carrier screening before call completion to address this problem. Calling card/carrier screening occurs before validation of the calling card when the calling and called numbers are already known. If screening is not done at this time, calling card/carrier screening occurs when the calling and called numbers are known. For example, an operator validates a calling card before calling and called number are known. When calling and called number are known, calling card/carrier

Exchange Alternate Billing Service - Canada (continued)

screening is performed. In this occurrence the calling card will not be validated again before the call is floated. To provide this new functionality, table CCVINFO is modified and new table CARRSCRN is created.

Datafill tables

Datafill order is OCCINFO, CARRSCRN, and CCVINFO.

- Table OCCINFO (no change)

  Enter this table with different carriers that new table CARRSCRN, field CARRLIST uses.

- Table CCVINFO (modified)

  New field CARRIDX is an index in new table CARRSCRN. Table CCVINFO is for CCV queries and is in the index with calling card formats RAO, CIID, CCITT or directory number format. Field PARMSIDX is an index in table CCVPARMS. Sample datafill appears in the following example.

MAP example for table CCVINFO

```
CCVDIGS   PARMSIDX   CARRIDX
_____________________________
212220      254        0
677001      55         2
677101      253        2
834001      6          0
836001      254        62
891999      3          0
891288      4          2
891333      1          3
9194        254        0
919781      250        1
```

If a specified calling card number does not have a match in this table, calling card/carrier screening is not performed. The call can complete.

- Table CARRSCRN (new)

  New table CARRSCRN provides calling card/carrier screening. This table indicates which carriers can complete an IEC call billed to a specified

Exchange Alternate Billing Service - Canada (continued)

calling card. In this table, permitted carriers are entered against indexes of calling cards. The fields are as follows:

— IDX - A key in this table defined in table CCVINFO, field CARRIDX. The range is 0 to 62.

— PERMIT - Indicates if ALL, NONE or SOME carriers are permitted to complete an IEC call.

— CARRLIST - A list of a maximum of 16 carriers permitted to complete a call if field PERMIT = SOME. Otherwise, this field is not used. Carriers must be predefined in table OCCINFO.

Sample datafill appears in the following example.

MAP example for table CARRSCRN

```
IDX    PERMIT    CARRLIST
_____________________________________________________________
0      ALL
1      NONE
2      SOME      0288
3      SOME      0333
62     SOME      0333,0555
```

The first two tuples are defaults and cannot be altered or removed.

Automated calling card validation enhancement

When a 14 digit calling card (RAO or DN) or CCITT calling card is collected, the following steps are taken to validate the card. The steps are a collection of new and current steps. For additional information, refer to Expanded Calling Card Format SS7, ABS00101.

(existing: 1-3)

1. The system checks the entered calling card number for format.

   The calling card number does not always conform to one of the formats (RAO, CIID, CCITT, or Directory Number Format). When this event occurs, the system rejects the card immediately.

2. If the format checks pass, the system checks the calling card against table HOTLIST for a match.

   Table HOTLIST records special numbers that are HOT, for example, used in occurrences of fraud or classified as invalid. This table is a local cache. If a match is present, the system prompts the subscriber to enter the calling

card again, and validation begins again. If a match is not present, validation continues.

3. The system checks the calling card against table CCVINFO.

   This table is for CCV queries. This table contains an index in table CCVPARMS and an index in new table CARRSCRN. If a match is not present in modified table CCVINFO, calling card/carrier limits do not apply. Table CCVPARMS is checked next in step 4.

   (new: a-c)

   a. If a match is present in table CCVINFO and the call is an IEC call, table CARRSCRN is checked for calling card/carrier limits.

   b. If a carrier limit is noted, the carrier of the card is compared to the serving carrier on the call.

      If a match is present, validation continues in step 4. If a match is not present, the call transfers to an operator for processing.

   c. On call arrival at the Operator Position, RESIC displays on the operator screen. This display indicates that the call occurred because the permitted carriers and the serving carrier on the call are not compatible, as specified in table CARRSCRN, .

      Billing is not accepted and the operator performs one of the following practices:

      - Change Billing Type
      - Change Calling Card
      - Change Carriers
      - Transfer to operator of specified carrier
      - Cancel Call
      - Enter calling card again (not very common)

   The validation process cannot continue until a correct calling card/carrier match is found or billing changes to collect or third.

   (existing: 4-7)

4. The calling card is checked against table CCVINFO for a match.

   Table CCVINFO indexes in table CCVPARMS. This condition specifies the database to which a calling card validation or billed number screening query must be sent. If a match is present, the query type is LIDB, BVC, SDB, MANUAL or BLK. If a match is not present, the query type is assumed to be LIDB.

5. Table CCVPARMS is checked.

Exchange Alternate Billing Service - Canada (continued)

This table provides query launching information and an index in table ACCSERR. Table ACCSERR allows datafill of the desired reaction when a response message different from a normal/successful response message is received from an LIDB.

6. A validation query is launched to the correct database.
7. If the database response indicates a correct calling card, the call completes.

   If the database does not indicate a correct calling card, the system prompts the subscriber to enter the calling card again. Validation begins again. The call cannot complete until the subscriber enters an acceptable calling card number or an alternate billing class.

Operator assisted calling card validation enhancement

When a 14-digit calling card (RAO or DN) or CCITT calling card is collected, the following steps are taken to validate it. The steps are a group of new and present steps. For more information, refer to Expanded Calling Card Format SS7, ABS00101.

(existing: 1-3)

1. The system checks the entered calling card number for format.

   If the number does not conform to one of the formats in the appendix, the system rejects the card immediately.

2. If the format checks pass, the system checks the calling card against table HOTLIST for a match.

   Table HOTLIST records special numbers that are HOT, i.e., used in cases of fraud or classified as invalid. This table is a local cache. If a match is present, the system prompts the subscriber to enter the calling card again. Validation begins again. If a match is not present, validation continues.

3. The system checks the calling card against table CCVINFO.

   This table is for CCV queries. This table contains an index in table CCVPARMS and an index in table CARRSCRN. If a match is present in table CCVINFO calling card/carrier limits do not apply. Table CCVPARMS is checked next in step 4.

   (new: a-c)

   a. A match can be present in table CCVINFO and the call is not always an IEC call or the carrier number is not always present. When this

event occurs, the calling card/carrier checks are not performed. Go to step 4.

If a match is present in table CCVINFO and the call is an IEC call, table CARRSCRN is checked for calling card/carrier limits.

b. If a carrier limit is noted, the carrier of the card is compared to the serving carrier on the call.

If a match is present, validation continues in step 4.

c. If a match is not present, the operators screen displays RESIC. This RESIC indicates that the call occurs because the permitted carriers and the serving carrier on the call are not compatible, as specified in table CARRSCRN, .

Billing is not accepted and the operator performs one of the following practices:

- Change Billing Type (Collect, Third, etc.)
- Change Calling Card
- Change Carriers
- Transfer to operator of specified carriers
- Cancel Call
- Enter calling card again (not very common)

The call cannot complete until a correct calling card/carrier match is found or billing changes to collect or third.

(existing: 4-7)

4. The calling card is checked against table CCVINFO which indexes in table CCVPARMS for a match.

Table CCVPARMS specifies the database that a calling card validation or billed number screening query must be sent.

If a match is present, the query type is LIDB, BVC, SDB, MANUAL, or BLK. If a match is not present, the query type is assumed to be LIDB.

Table CCVPARMS provides query launching information and an index in table ACCSERR. Table ACCSERR allows the entry of the desired reaction when a response message different than a normal/successful message is received from a LIDB response.

Exchange Alternate Billing Service - Canada (continued)

5. A validation query is launched to the appropriate database.
6. If the database response indicates a correct calling card and carrier screening occurred, the call is complete. This action occurs if the call was an IEC call.

   If carrier screening was required and did not occur, the screening is performed before call completion. In all other conditions, the operator responds according to specified operator practices. An IEC call cannot be complete until the operator verifies an acceptable calling card number or an alternate billing class. This action cannot occur unless the calling card/carrier screening passes.

Re-validation due to operator interruption

The following are calling card re-validations examples, calling card/carrier screening, caused by operator interruption.

- Changing calling card number:

  If the operator enters a different calling card number than the number entered before, the carrier limits can change. The new carrier can or cannot complete the call. The new card must be re-validated.

- Changing the called number:

  If the operator enters a new called number, the call can become a carrier or a non-carrier call. If the call becomes a non-carrier call, calling card/carrier limits do not apply. Validation continues. If the call becomes a carrier call, the calling card/carrier limits can apply. In this event, validation begins again.

- Changing the carrier:

  If the operator changes the carrier a call can complete with, the new carrier must be compared against the carrier limits of the calling card. In this event the validation process begins again. In addition, a call can toggle between served and no-served. For example, when the operator changes carriers for an IEC call, the call can become no-served or served. The calling card/carrier checks only apply if the IEC call is served. If the IEC call is no-served, the operator transfers the call to the carriers operator for completion.

- Changing billing type

  If the subscriber changes billing type to a calling card, the calling card must be re-validated.

Changes seen by subscriber

Calling card/carrier limits are checked before launching a CCV query to the LIBD for served IEC calls.

Exchange Alternate Billing Service - Canada (continued)

The subscriber sees changes in the ACCS/MCCS automated systems as appear in the following process steps.

ACCS/MCCS

1. (current) The subscriber enters a calling card number in response to a bong tone or a recorded announcement.
2. (new) Calling card screening is performed on IEC calls.

   If the card fails to validate because of carrier limits, the call transfers to an operator without warning. If the card validates by passing carrier limits, calling card validation continues by launching a CCV query.
3. (current) A CCV query is launched to the LIDB for validation.

   If the card fails to validate, the subscriber receives a message. This message states the card number you entered is invalid, try your card again or dial 0 for another form of billing. The system prompts the subscribers a number of times. On the last prompt, the subscriber receives a different message. This message states, the card number you entered is not valid, hang up, dial 0 plus the number you are calling for operator assistance. If the card validates, the call connects automatically and is billed to the calling card.

   At the start, if the subscriber does not enter a calling card number, the subscriber transfers to an operator without notice.

   If the subscriber elects to dial 0 from ACCS/MCCS before the subscriber enters the calling card number, the subscriber transfers to an operator without notice.

The subscriber sees changes in the AABS automated systems as appear in the following process steps.

AABS

1. (current) The subscriber enters a calling card number in response to a bong tone and a recorded announcement.
2. (new) Calling Card Screening is performed on IEC calls.

   If the card fails to validate because of carrier limits, the call transfers to an operator with a warning. If the card validates by passing carrier limits, calling card validation continues by launching a CCV query.
3. (current) A CCV query is launched to the LIDB for validation.

   If the card fails to validate, the subscriber receives a message. This message states, the card number you entered is invalid, try your card again or dial 0 for another form of billing. The system prompts the subscribers

Exchange Alternate Billing Service - Canada (continued)

a number of times. On the last prompt, the subscriber receives a different message. This message states, the card number you entered is not valid, hang up, dial 0 plus the number you are calling for operator assistance. If the card validates, the call connects automatically and bills to the calling card.

At the start, if the subscriber does not enter a calling card number, the subscriber transfers to an operator with a warning message.

The subscriber can elect to dial 0 from AABS before the entry of a calling card number. When this event occurs, the subscriber is transferred to an operator with a warning message.

Examples for an automated system with the calling and called numbers present before calling card validation

This section presents examples that demonstrate use of the calling card screening tables. These examples refer to previous sample datafill for tables CCVINFO and CARRSCRN.

Example 1 - No limits: This condition applies when a specified calling card does not have limits on which carrier completes the call. A 0 is entered in the CARRIDX field in table CCVINFO.

1. Caller enters card # 891999-99999999999-3333 when the system prompts the caller for his/her calling card number by AABS or MCCS/ACCS.
2. After preliminary processing, the DMS searches table CCVINFO and finds a match with 891999.

   CARRIDX has a value of 0.
3. If the call is an IEC call, table CARRSCRN is accessed.

   Tuple 0 is accessed because the CARRIDX field of table CCVINFO has the value 0. If the call is not an IEC call, calling card/carrier screening is not performed.
4. Tuple 0 indicates the selected card is correct for billing every IEC call.

   Limits do not apply. Calling card validation continues by accessing table CCVPARMS.
5. With the validation of the calling card, the call completes.

Example 2 - Each carrier has limits: This condition applies when a call is billed to a card that is not allowed to accept billing for an IEC call. Carrier calls cannot be billed to these cards. Every IEC call that uses this type of

Exchange Alternate Billing Service - Canada (continued)

calling card for billing is not permitted. A 1 is entered in the CARRIDX field of table CCVINFO.

1. Caller enters card # 919-781-8252-6666 when the system prompts the caller for the calling card number by AABS or MCCS/ACCS.
2. After preliminary processing, the DMS searches table CCVINFO and finds a match with 919781.

   CARRIDX has a value of 1.
3. If the call is an IEC call, table CARRSCRN is accessed.

   Tuple 1 is accessed because the CARRIDX field of table CCVINFO has the value 1. If the call is not an IEC call, calling card/carrier screening is not performed.
4. Tuple 1 indicates the selected card is not correct for billing IEC calls.
5. This type of card limits billing, the call transfers to an operator for processing.

   On display, RESIC displays on the operators screen. The RESIC indicates that the call occurred because the permitted carriers are not compatible, as specified in table CARRSCRN, and the serving carrier on the call.
6. When at an Operator Position, the following operator practices are supported:
   - Change billing type:

     The operator can change the billing type. In this event, the validation of the new billing type occurs. A check for calling card/carrier limits

Exchange Alternate Billing Service - Canada (continued)

is performed when type of billing indicates that billing is to a calling card and the call is an IEC call.

- Change calling card:

  The operator can change the type of calling card that billing uses, if the subscriber has another calling card. When this event occurs, the validation of the new calling card occurs.

- Cancel the call:

  If the operator cannot validate an alternate form of billing, the operator terminates the call.

- Change carriers:

  The operator can change the carrier of the call. When this event occurs, the new carrier is screened.

- Transferring the call to the carrier:

  If the operator cannot validate billing, the operator can choose to transfer the call to the carrier for completion.

- Retry calling card number:

  The operator enters the calling card again if the subscriber entered the card incorrectly. When this event occurs, the validation of the card again occurs. This occurrence is supported and not common.

Example 3 - One or more limits: This condition applies when a call is billed to a card that can accept billing for specified IEC calls. Specified carrier calls can be billed to these cards. A value from 2 to 62 is entered in the CARRIDX field in table CCVINFO.

1. Caller enters card # 891288-99999999999-3333 when the system prompts the caller for the calling card number by AABS or MCCS/ACCS.
2. After preliminary processing, the DMS searches table CCVINFO and finds a match with 891288.

   CARRIDX has a value of 2.
3. If the call is an IEC call, table CARRSCRN is accessed.

   Tuple 2 is accessed because the CARRIDX field of table CCVINFO has the value 2. If the call is not an IEC call, calling card/carrier screening is not performed.
4. The PERMIT field of tuple 2 indicates that some carriers are permitted to complete the IEC call.
5. The PERMIT field of tuple 2 is entered with SOME and additional field CARRLIST is entered with the allowed carrier/carriers.

6. Field CARRLIST is entered with 0288 and 0288 is the only carrier that can complete this IEC call.
7. The carrier compares to the serving carrier on the IEC call.
   a. If the carriers match, table CCVPARMS is accessed to complete Calling Card Validation before the call can complete.
   b. If the carriers do not match, the call transfers to an operator to process.

      On display, RESIC, for the TOPS IV, ResIC, for the TOPS MP, or Restricted IC, default for the TOPS MPX, displays on the operators screen. This information indicates that the call occurred because the permitted cariers and the serving carrier on the call are not compatible, as specified in table CARRSCRN.
8. When at an Operator Position, the following operator practices are supported:
   - Change billing type
   - Change calling card
   - Change carriers
   - Cancel the call
   - Transfer the call to the carrier
   - Retry calling card number (Supported and not common)

Examples for an Operator Position with the calling and called numbers not present before calling card validation

This section presents examples that demonstrate the use of the calling card screening tables. These examples refer to previous sample datafill for tables CCVINFO and CARRSCRN.

Example 1 - No limits: This condition applies when a calling card does not have limits on which carrier completes the call. A 0 is entered in the CARRIDX field in table CCVINFO.

1. Operator enters card # 891999-99999999999-3333 when the call arrives at the position.

   The subscriber requests billing to a calling card. At this point the calling and called number are not known.
2. After preliminary processing, the DMS searches table CCVINFO and finds a match with 891999.

   CARRIDX has a value of 0.

Exchange Alternate Billing Service - Canada (continued)

3. If the call is an IEC call, the carrier number is known, the database query type is LIDB. If the call is an IEC call, the call is served and table CARRSCRN is accessed.

   This condition occurs because the calling and called numbers are not present. If this is a carrier call is not known and the carrier number is not present. Carrier screening is not performed at this point.

4. If the call is an IEC call, the carrier number is known, the database query type is LIDB. If the call is an IEC call, the call is served and table CARRSCRN is accessed.

   Calling and called number are present. This condition causes carrier screening to occur. Tuple 1 is accessed because the CARRIDX field of table CCVINFO has the value 1.

5. The calling card is validated.

6. Operator enters calling and called numbers.

7. The DMS searches table CCVINFO and finds a match with 891999.

   Field CARRIDX has a value of 0.

8. If the call is an IEC call, the carrier number is known, the database query type is LIDB. If the call is an IEC call, the call is served, table CARRSCRN is accessed.

   Calling and called number are present and carrier screening is performed. Tuple 0 is accessed because the CARRIDX field of table CCVINFO has the value 0.

9. Tuple 0 indicates that the selected card is correct for billing all IEC calls.

   Limits do not apply. The call is complete.

Example 2 - Each carrier has limits: This condition applies to a card that cannot accept billing for an IEC call. Carrier calls cannot be billed to these cards. Every IEC call, that uses this type of calling card for billing, is not permitted. A 1 is entered in the CARRIDX field in table CCVINFO.

1. Operator enters card # 919-781-8252-6666 when the call arrives at the position.

   The subscriber requests billing to a calling card. The calling and called number are not known.

2. After preliminary processing, the DMS searches table CCVINFO and finds a match with 919781.

   Field CARRIDX has a value of 1.

Exchange Alternate Billing Service - Canada (continued)

3. If the call is an IEC call, the carrier number is known and the database query type is LIDB. If the call is an IEC call, the call is served and table CARRSCRN is accessed.

   This condition occurs because the calling and called numbers are not present. If this is a carrier call is not known and the carrier number is not present. Carrier screening is not performed.

4. The calling card is validated.
5. The operator enters calling and called numbers.
6. The DMS searches table CCVINFO and finds a match with 919781.

   Field CARRIDX has a value of 1.

7. If the call is an IEC call, the carrier number is known and the database query type is LIDB. If the call is an IEC call, the call is served and table CARRSCRN is accessed.

   Calling and called number are present and carrier screening is performed. Tuple 1 is accessed because the CARRIDX field of table CCVINFO has the value 1.

8. Tuple 1 indicates that the selected card is not correct for billing any IEC calls.
9. This type of card has limits for billing. The following information appears on the operator screen:

   - RESIC, for the TOPS IV
   - ResIC, for the TOPS MP
   - Restricted IC, for the TOPS MPX

     This information indicates that the call occurred because the permitted carriers and the serving carrier on the call are not compatible, as specified in table CARRSCRN.

10. The following operator practices are supported:

    - Change billing type:

      The operator can change the billing type. For this operation, validation of the new billing type occurs. A check for calling

Exchange Alternate Billing Service - Canada (continued)

card/carrier limits occurs when the type of billing indicates that billing is to a calling card. This action occurs if the call is an IEC call.

- Change calling card:

  The operator can change the type of calling card used for billing, if the subscriber has another calling card. When this event occurs, validation of the new calling card occurs.

- Cancel the call:

  If the operator cannot validate an alternate form of billing, the operator terminates the call.

- Change carriers:

  The operator can change the carrier of the call. For this operation, the new carrier is screened.

- Transfer the call to the carrier:

  If the operator cannot validate billing, the operator can choose to transfer the call to the carrier for completion.

- Try calling card number again:

  The operator enters the calling card again if the subscriber entered the card incorrectly. When this event occurs, validation of the card occurs again. This action is supported and not common.

Example 3 - One or more limits: This condition applies to a card that can accept billing for specified IEC calls. Specified carrier calls can be billed to these cards. A value from 2 to 62 is entered in the CARRIDX field in table CCVINFO.

1. Operator enters card # 891288-99999999999-3333 when the call arrives at the position.

   The subscriber requests billing to a calling card. The calling and called number are not known.

2. After preliminary processing, the DMS searches table CCVINFO and finds a match with 891288.

   Field CARRIDX has a value of 2.

3. If the call is an IEC call, the carrier number is known and the database query type is LIDB. If the call is an IEC call, the call is served and table CARRSCRN is accessed.

   This condition occurs because the calling and called numbers are not present. If this is a carrier call is not known and the carrier number is not present. Carrier screening is not performed.

Exchange Alternate Billing Service - Canada (continued)

4. The calling card is validated.
5. Operator enters calling and called numbers.
6. The DMS searches table CCVINFO and finds a match with 891288.

   FieldCARRIDX has a value of 2.
7. If the call is an IEC call, the carrier number is known and the database query type is LIDB. If the call is an IEC call, the call is served and table CARRSCRN is accessed.

   Carrier screening occurs because calling and called number are present. Tuple 2 is accessed because the CARRIDX field of table CCVINFO has the value 2.
8. The PERMIT field of tuple 2 indicates that some carriers are permitted to complete the IEC call.
9. An additional field CARRLIST is entered with the allowed carrier/carriers. This action occurs because the PERMIT field of tuple 2 has the value SOME.
10. The only carrier that can complete this IEC call is carrier 0288. This condition occurs because field CARRLIST has the value 0288.
11. The carrier is compared to the serving carrier on the IEC call.
    a. If the carriers match, the call completes.
    b. If the carriers do not match, the following information appears on the operator screen:
       - RESIC, for the TOPS IV
       - ResIC, for the TOPS MP
       - Restricted IC, for the TOPS MPX

       This information indicates that the call occurred because the permitted carriers and the serving carrier on the call are not compatible, as specified in table CARRSCRN.
12. The following operator practices are supported:
    - Change billing type
    - Change calling card
    - Change carriers
    - Cancel the call
    - Transfer the call to the carrier
    - Try calling card number again (supported and not common)

Exchange Alternate Billing Service - Canada (continued)

Calling card formats

The RAO, Directory number format, and CCITT formats appear in package Expanded Calling Card Format SS7, ABS00101. The following is the CIID format.

CIID calling card format

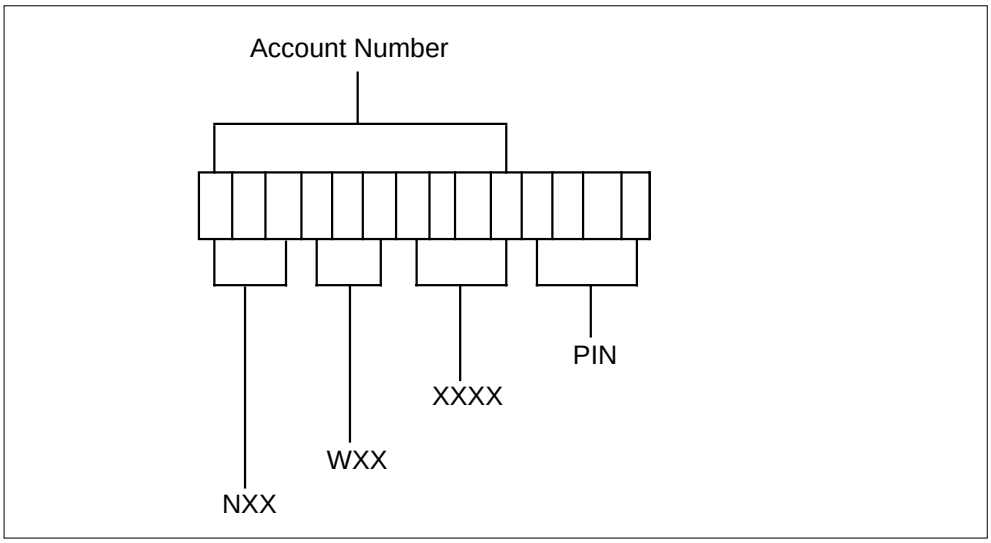

The CIID number format is a fixed length format, 14 digits in length. The two parts of the CIID number are the Account Number and the PIN.

The Account Number is 10 digits in length and contains the following fields:

- NXXWXX - This field is a six-digit code assigned to interexchange carriers that request this field for use in 14-digit telecommunication cards. This code is also called the Card Issuer Identifier. Bellcore assigns the Card Issuer Identifer. Bellcore code assignments first occurred in the 8XXWXX and 9XXWXX series. The first digit ranges from 2 to 9. The X ranges in value from 0 to 9. The W is 0 or 1.
- XXXX - Customer Account Number. The card issuer assigns the customer account number. The number is 4 digits in length. The X ranges in value from 0 to 9.

The Personal Identification Number (PIN), is a single field. The PIN is 4 digits in length and ranges in value from 2000 to 9999.

Dump and restore

During dump and restore, the old BCS34 or BCS35 logical tuple copies to the new BCS36 logical tuple. The new field CARRIDX value that appears in the

new logical tuple is initialized to 0. This 0 is the default that means ALL carriers can complete IEC calls and no calling card/carrier limits apply.

Table CCVINFO was not present before BCS34.

Translations table flow

Translations table flow is not provided for TOPS Terminating Code Screening.

Limits

The following limits apply to Exchange Alternate Billing Service - Canada:

- This feature applies to calling card calls that originate from coin telephones only.
- This feature is not available to the overseas operator center (OOC) position.
- Terminating code screening for operator entered calling card numbers applies only to cards entered with SPL CLG. Cards entered with SPL CLD are not screened.
- Overseas calling cards are never terminating code screened.
- This feature is not available to the Automated Alternate Billing Service (AABS). The AABS is part of the Voice Service Node (VSN) system. This feature is not available for use on VSN.
- There are no changes to EBAF.
- The CCITT cards are not identified as HOT because CCITT calling cards do not fit in the table.
- This package requires package Exchange Alternate Billing Services, ABS00101, to operate.

If EABS and TICS packages are present in the office, the system does not block calls for the carrier.

BK08865 - Calling card screening enhancements (BCS36)

This PRSDOC applies when the billing type is a calling card. An LEC that completes an IEC call for a served carrier must transport the call.

- No-served compared to served carrier:

  The calling card/carrier checks apply if the IEC call is a served call. If the call is no-served, the operator transfers the IEC call to the operator of the carriers. Alternate billing is not performed.

- Called party billing to a calling card:

Exchange Alternate Billing Service - Canada (continued)

When a call is billed collect, the calling party picks the carrier and the called party pays for the call. The selection of the carrier occurs before connection to the called party occurs. If the called party chooses to bill the IEC call to the calling card, calling card/carrier checks apply. When the subscriber connects to the called party, carriers cannot change. This condition is seen as a limit to current operator practices. Calling card/carrier screening can indicate that the calling card is not a correct card for billing. When this condition occurs, only one method that floats the call with correct billing is present. This method changes billing from the calling card with limits or terminates the call and connects the call again through a different carrier. The same conditions apply for 3rd party billing.

- Sequence calls:

  Sequence calls require that set field SEQRY = Y in table CCVPARMS. This condition makes sure that calling card/carrier screening occurs for each sequence IEC call.

- ONI/ANIF calls:

  When a called and calling number are present for IEC calls, the connection between two parties is allowed. This event occurs even when billing is not satisfied. The party can decide to bill this call to a calling card that has carrier limits. When this condition occurs, only one method that floats the call with correct billing is present. This method changes billing from the calling card with limits or terminates the call and connects the call again with a different carrier.

- Duplicate carriers allowed in table CARRSCRN:

  Table CARRSCRN can contain a maximum of 16 carriers. These carriers do not have to be different. The operating company must enter data for these carriers in a different way.

- Applicable calling card types:

  — Applicable: RAO/CIID, CCITT and DN format calling cards.

  — Non-applicable: Overseas and Manual calling cards.

- CIID compared to RAO:

  This PRSDOC treats CIID calling cards the same as RAO calling cards. The operating company must determine limits for these calling cards. The operating company must enter tables CCVINFO and CARRSCRN correctly.

- HOT cards compared to RESIC cards:

  In the past, calling cards marked as HOT had priority over other invalid or limited calling card status cards. This PRSDOC continues to give priority to calling cards marked as HOT. If a calling card number is entered in

tables HOTLIST and CCVINFO, the card is marked as HOT. The operator screen displays HOT and the operator can float the call. A calling card can be HOT and RESIC at the same time and is treated as HOT.

Interactions

The following paragraphs describe the interactions between Exchange Alternate Billing Service - Canada and other functionalities.

This feature blocks billing with calling cards on ACCS/MCCS and operator assisted (Manual) that are terminating code screened.

If the Exchange Alternate Billing Service (EABS) and TOPS Inter-LATA Carrier Service (TICS) packages are present in the office, the following interactions occur.

- The CCVPARMS table can indicate that the type of billing validation is BVC for a TICS-served carrier call. When this condition occurs, the fields in the TOPEACAR table indicate if a query automatically occurs or if the query requires manual validation. The following fields indicate the query type:

  — CCVQUERY and CCVVAL for CCV queries

  — BNSQUERY and BNSVAL for third number billing queries

  — COLQUERY and COLVAL for collect billing queries

  None of these fields apply if the type of query that the CCVPARMS table indicates is an LIDB query.

- For calls dialed 0+ to a TICS-served carrier, MCCS prompts the subscriber to enter a CCN if the TOPS office has MCCS. Before collection of the CCN, the type of billing validation query is not known. The condition occurs because the CCVINFO table uses the billing number as the key. Fields CCVQUERY and CCVVAL in the TOPEACAR table determine if MCCS must collect CCN.

  The CCVQUERY field can be set to NOQUERY, or the CCVQUERY field can be set to QUERY and the CCVVAL field can be set to N (No). When these conditions are present, the following actions occur:

  — the MCCS collects the CCN

  — the MCCS sends LIDB or BVC query

  — the MCCS continues to handle the call

  If these fields are set with other values, the call goes directly to an Operator Position.

Exchange Alternate Billing Service - Canada (continued)

BK08865 - Calling card screening enhancements (BCS36)

This PRSDOC is also in package EABS, ABS00101. The TOPS Inter-LATA Carrier Service (TICS), OSEA0101, package is required. This package determines if a carrier serves the call and which carrier serves the the call. Modified table CCVINFO is packaged with EABS. New table CARRSCRN is packaged with the TICS package.

Limits are added to the table control of table CCVINFO. These limits do not allow the datafill of an index in table CARRSCRN unless the TICS package is present. The one index that is allowed in table CCVINFO has the value of 0. If the CARRIDX field detects the value 0, table CARRSCRN is not accessed. The acceptance is that calling card/carrier limits do not apply and that every carrier can complete IEC calls. If TICS is present and EABS is not present, table CARRSCRN does not have meaning.

Impact to AWT: Before this activity, operators manually validated calling cards used to bill IEC and LEC calls. This method increases AWT which increases expenses for the operating companies. This PRSDOC automates processing of these calls, which reduces AWT.

Datafilling office parameters

The office parameters that Exchange Alternate Billing Service - Canada uses appear in the following table. For additional information about office parameters, refer to *Office Parameters Reference Manual*.

Office parameters by Exchange Alternate Billing Service - Canada

Table name	Parameter name	Explanation and action
OFCENG	TOPS_ACCS_CCV_QUERY_BLK	This parameter specifies if a call must go through as a normal call or if the system blocks the call. The system can block the call with an announcement for a calling card call that is not correct. This parameter applies to subscriber-dialed CCV calls only. If set to Y, the system blocks CCV calls that fail and routes the calls to an announcement. If the parameter is set to N, CCV calls that fail proceed as a normal call without validation. Activation of this parameter is immediate.

Exchange Alternate Billing Service - Canada (continued)

Office parameters by Exchange Alternate Billing Service - Canada

Table name	Parameter name	Explanation and action
OFCENG	TOPS_ACCS_ACG	This parameter turns on or off Automatic Call Gapping.
OFCENG	TOPS_ACCS_ACG	This parameter is for use with Automatic Call Gapping. Default value is PRIME1. Start with PRIME1. If OM BNSNOACG or CCVNOAGS is increased, increase the value of this parameter to the next value and cold restart.

Datafill sequence

The tables that require datafill to implement Exchange Alternate Billing Service - Canada appear in the following table. The tables appear in the correct entry order.

Datafill requirements for Exchange Alternate Billing Service - Canada

Table	Purpose of table
OVSBILL	TOPS Overseas Billing Limits. This table provides billing limit information for each country in the table.
DOMBILL	TOPS Domestic Billing Limits. This table provides billing limit information for each domestic region in the table.
TERMSCRN	TOPS ACCS Terminating Code Screening. For purposes of fraud prevention, this table screens Automatic Calling Card Service (ACCS) calls to specified countries or NPA-NXX numbers from specified pay telephones.
OCCINFO	Equal Access List of Other Common Carrier Names.
CARRSCRN	Carrier Screening.
CCVINFO	Calling Card Validation Information.

Exchange Alternate Billing Service - Canada (continued)

The following datafill for these tables provides an example of terminating screening:

1. A coin station with a calling number of 613-555-1111 dials a person in Mexico, and bills the call to a calling card.

   From table OVSBILL, terminating code screening applies to this call.

   From table TERMSCRN, the calling number matches the second entry (6135551111) and the call routes to a TOPS operator.

2. A coin station with a calling number of 416-654-3210 dials Calgary, and bills the call to a calling card.

   From table DOMBILL, calls to Alberta apply terminating code screening.

   From table TERMSCRN, the calling number matches the first entry and the call routes to a TOPS operator.

3. A coin station with a calling number of 416-654-3210 dials Turkey, and bills the call to a calling card.

   From table OVSBILL, terminating code screening does not apply and the call is billed to the calling card.

Datafilling table OVSBILL

Datafill for Exchange Alternate Billing Service - Canada for table OVSBILL appears in the following table. The fields that apply to Exchange Alternate Billing Service - Canada appear in this table. See the data schema section of this document for a description of the other fields.

Datafilling table OVSBILL

Field	Entry	Explanation and action
CCSCRN	Y	A new field. Enter Y to screen the country entry in field COUNTRY NAME against the list of calling numbers in table TERMSCRN. Default value is N.

Datafill example for table OVSBILL

Sample datafill for table OVSBILL appears in the following table.

Exchange Alternate Billing Service - Canada (continued)

MAP example for table OVSBILL

```
COUNTRY NAME     COLLECT PERONLY      THIRDOK      CCSCRN
_____________________________________________________________
MEXICO           ALW         N           N            Y
JAPAN            DEN         N           Y            Y
TURKEY           PER         N           N            N
                 OOC
```

Datafilling table DOMBILL

Datafill for Exchange Alternate Billing Service - Canada for table DOMBILL appears in the following table. The fields that apply to Exchange Alternate Billing Service - Canada appear in this table. See the data schema section of this document for a description of the other fields.

Datafilling table DOMBILL

Field	Entry	Explanation and action
CCSCRN	Y	A new field. Enter Y to screen the region entry in field REGION NAME against the list of calling numbers in table TERMSCRN. Default value is N.

Datafill example for table DOMBILL

Sample datafill for table DOMBILL appears in the following example.

MAP example for table DOMBILL

```
REGION NAME COLLECT      PERONLY      THIRDNUM     CCARD    CCSCRN
_____________________________________________________________
ALBERTA     DEN          Y            ALL          ALL      Y
BC          ALW          N            REG          NONE     Y
SASK        PER          N            NONE         REG      Y
```

Datafilling table TERMSCRN

Datafill for Exchange Alternate Billing Service - Canada for table TERMSCRN appears in the following table. The fields that apply to Exchange

Exchange Alternate Billing Service - Canada (continued)

Alternate Billing Service - Canada appear in this table. See the data schema section of this document for a description of the other fields.

Datafilling table TERMSCRN

Field	Entry	Explanation and action
CLGNUM	1 to 18 digits	This is a new table that contains only this field. This table provides the list of calling numbers to screen. A customer can dial a area or country from a coin station for which screening applies. The calling number of the customer can be in table TERMSCRN. When these two events occur, the call routes to a TOPS operator. Enter a 1 to 18 digit calling number. Field CCSCRN in tables DOMBILL and OVSBILL indicate the areas or countries to which screening applies.

Datafill example for table TERMSCRN

Sample datafill for table TERMSCRN appears in the following table.

MAP example for table TERMSCRN

```
CLGNUM
________
416654
613555111
```

Datafilling table OCCINFO

Datafill for Exchange Alternate Billing Service - Canada for table OCCINFO appears in the following table. The fields that apply to Exchange Alternate Billing Service - Canada appear in this table. See the data schema section of this document for a description of the other fields.

Datafilling table OCCINFO

Field	Subfield or refinement	Entry	Explanation and action
			This table is not modified. This table must be entered before table CARRSCRN with a list of permitted carriers.

Datafill example for table OCCINFO

Sample datafill for table OCCINFO appears in the following example.

MAP example for table OCCINFO

```
CARRNAME CARRNUM ACCESS ORIGCARR INTER INTNTL INTRA ANI FANI
ONISCRN AD1 OVERLAP INTERS INTRAS TERMREC OCCSEPNO OPSIG
PICIND NOA950 INCCPN DTMFIND OPSERV CACBLOCK CTDOA CMCMON
SCRNWATS CRMCRA ATPINCL INTRAOPR
_____________________________________________________________
C111    0288     EAP       N      Y     Y     N    Y   N
N    Y       Y      Y      Y    LONG      0     FGRPC
Y      N      N       N      N       N       N     N
N        Y       N       N
```

Datafilling table CARRSCRN

Datafill for Exchange Alternate Billing Service - Canada for table CARRSCRN appears in the following table. The fields that apply to Exchange Alternate Billing Service - Canada appear in this table. See the data schema section of this document for a description of the other fields.

Datafilling table CARRSCRN

Field	Entry	Explanation and action
IDX		Key to table. Value is defined in table CCVINFO, field CARRIDX.
PERMIT	ALL, SOME, NONE	ALL, SOME, or NONE of the carriers are permitted to complete an IEC call. If PERMIT= ALL, calling card/carrier limits do not apply. If PERMIT= NONE, calling card/carrier limits apply.
CARRLIST		A list of a maximum of 16 carriers permitted to complete an IEC call. Carriers are defined in table OCCINFO. This field only appears if field PERMIT = SOME.

Datafill example for table CARRSCRN

Sample datafill for table CARRSCRN appears in the following table.

MAP example for table CARRSCRN

```
IDX   PERMIT   CARRLIST
_____________________________
0     ALL
1     NONE
2     SOME     0288
3     SOME     0333
62    SOME     0333,0555
```

Exchange Alternate Billing Service - Canada (continued)

The first two tuples are defaults and cannot be altered or removed.

Error messages for table CARRSCRN

The following error messages apply to table CARRSCRN.

Error messages for table CARRSCRN

Error message	Explanation and action
`Carrier Number must be entered in table OCCINFO first.`	Table OCCINFO must be entered before the entry of CARRLIST field in table CARRSCRN. The operating company personnel can attempt to add or change a tuple in table CARRSCRN before the addition of the tuple to table OCCINFO. When this event occurs, the add or change is not allowed. The following error message appears:
Tuple 44 is not entered in table CARRSCRN.	Table CARRSCRN must be entered before the entry of table CCVINFO with a referencing tuple. The operating company personnel can attempt to add or change a tuple in table CCVINFO before the addition of the tuple to table CARRSCRN. When this event occurs, the add or change is not allowed. The following error message appears:
Tuple referred to by another table - use TABREF to get a potential table list.	Operating company personnel can attempt to delete a table CARRSCRN tuple that a tuple in table CCVINFO references. When this condition occurs, the delete is not allowed and the following error message appears:
Neither Tuple 0 nor Tuple 1 can be deleted or changed.	If operating company personnel attempt to change or delete default tuple 0 or default tuple 1, the change or deletion is not allowed. An error message appears:

Datafilling table CCVINFO

Table CCVINFO is for CCV queries. Calling card formats RAO, CIID, CCITT or Directory Number Format can index this table.

Datafill for Exchange Alternate Billing Service - Canada for table CCVINFO appears in the following table. The fields that apply to Exchange Alternate

Exchange Alternate Billing Service - Canada (continued)

Billing Service - Canada appear in this table. See the data schema section of this document for a description of the other fields.

Datafilling table CCVINFO

Field	Entry	Explanation and action
CARRIDX	0-63	This new field is an index into table CARRSCRN.

Datafill example for table CCVINFO

Sample datafill for table CCVINFO appears in the following table.

MAP example for table CCVINFO

```
CCVDIGS   PARMSIDX   CARRIDX
_____________________________
212220      254         0
677001      55          2
677101      253         2
834001      6           0
836001      254         62
891999      3           0
891288      4           2
891333      1           3
9194        254         0
919781      250         1
```

Exchange Alternate Billing Service - Canada (end)

Error messages for table CCVINFO

The following error messages apply to table CCVINFO.

Error messages for table CCVINFO

Error message	Explanation and action
`Tuple 44 is not entered in table CARRSCRN`	Table CARRSCRN must be entered before the entry of table CCVINFO with an attribute of table CARRSCRN. The operating company personnel can attempt to add or change a tuple in table CCVINFO before the addition of the referenced tuple to table CARRSCRN. When this event occurs, the add or change is not allowed.
Example error message: `Calling card/carrier screening is not available without the TOPS Inter-LATA Carrier Service package`	Table CCVINFO, field CARRIDX, must be entered with 0 for switches without the TOPS Inter-LATA Carrier Service Package (TICS). This is the default value, that indicates calling card/carrier limits do not apply. Operating company personnel receive an error message that indicates that TICS is not present.

Tools for verifying translations

Exchange Access Alternate Billing - Canada does not use translations verification tools.

SERVORD

Exchange Access Alternate Billing - Canada does not use SERVORD.

Expanded Calling Card Format SS7

Order codes

Functional group order code: ABS00101

Functionality order code: does not apply

Release applicability

Expanded Calling Card Format SS7 was introduced in BCS29.

Requirements

To operate, Expanded Calling Card Format SS7 has the following requirements:

- BAS Generic, BAS00003
- Operator Services Basic, OSB00101, and table TOPSFTR parameter TOPS_ON_OFF_SWITCH = Y

Description

The following features provide this functionality:

Feature number	Feature name
AF2017	TOPS Screen and Bellcore AMA Expanded Callling Card
AF2020	TOPS Expanded Calling Card Format - CSS7 Validation

AF2017 - TOPS Screen and Bellcore AMA Expanded Calling Card

The AF2017 feature implements the CCITT calling card format for TOPS. The improvements for TOPS IV and MP functionality occur. This improvement allows the collection and display of the CCITT calling card format at the TOPS position. Improvements to the TOPS BellCORE AMA Format occur to record the CCITT calling card format. Present validation capabilities are preserved for a subset of the CCITT calling card format. This condition allows for a change from current 14 digit format calling cards to the variable length CCITT format calling cards. This feature expands on and supercedes TOPS CCITT capabilities that TOPS International Telephone Credit Card (CCITT) developed in BCS28.

AF2020 - TOPS Expanded Calling Card Format - CSS7 Validation

This feature supports validation of the calling card over the CCS7 network. This support extends the current DMS Expanded Calling Card capabilities.

Expanded Calling Card Format SS7 (continued)

The following determines how the feature provides for different data connected with the query:

- the card issuer identification (e.g. database time-out values)
- the inclusion or exclusion of the called number in the query
- the Global Title Translation type

The feature enhances the current calling card validation to launch, as an option, a new query to a database for each sequence call. To use this feature, you must be familiar with the following:

- Mechanized Calling Card Service in EABS (MCCS), ABS00101
- Exchange Alternate Billing Service (EABS), ABS00101
- TOPS Expanded Calling Card Format SS7, ABS00101
- SS7 signaling protocol, which includes the TCAP/SCCP layers.

Note 1: Refer to packages EABS (MCCS), ABS00101, and EABS, ABS00101, for information on calling card sequence calls.

Note 2: Refer to *CCS/CCIS6 and CCITT6 System Description,* and *CCS7 Maintenance Reference Manual.*

Operation

Background (AF2017)

Calling Card Format (background, AF2017)

This section describes the current calling card formats that Traffic Operator Position System (TOPS) supports. The TOPS supports the Directory Number format and the Revenue Accounting Office Number format. This section describes the International Telegraph and Telephone Consultive Committee (CCITT) calling card format. The CITT calling card is a new format that TOPS supports when this feature is present.

This section provides a summary of how Directory Number and RAO Number format calling cards are validated. Non-automated and automated conditions appear in this section.

The TOPS can collect, validate and record in BellCORE (BC) Automatic Message Accounting (AMA) two calling card formats. These two formats are the Directory Number format and the RAO Number format. These two formats are 14 digit formats. Each calling card format is a fixed length of 14 digits.

Expanded Calling Card Format SS7 (continued)

When the feature is present, TOPS can collect, validate and record in BC AMA an additional calling card format. This format is the CCITT calling card format. CCITT Recommendation E.118 specifies this variable length format. The International calling card format is another name for the variable length format.

Directory Number Format (background, AF2017)

The Directory Number format is a fixed length format 14 digits in length. The Directory Number has two major parts. These parts are the Account Number, and the Personal Identification Number (PIN).

The Account Number is 10 digits in length and contains the following fields:

- NPA—Numbering Plan Area (NPA), 3 digits in length, range of values is the valid NPAs. This field does not include 700, 800 and 900.
- NXX—Central Office Code, three digits in length, N ranges in value from 2-9, X ranges in value from 0-9. This field does not include 555.
- XXXX—Line Number, four digits in length, X ranges in value from 0-9.

The Account Number is in the same format as a directory number of the subscriber.

The PIN is four digits in length and contains one field:

- PIN—Personal Identification Number, four digits in length, ranges in value from 2000-9999

The format of the Directory Number calling card format appears in the following figure.

Expanded Calling Card Format SS7 (continued)

Directory Number Calling Card Format

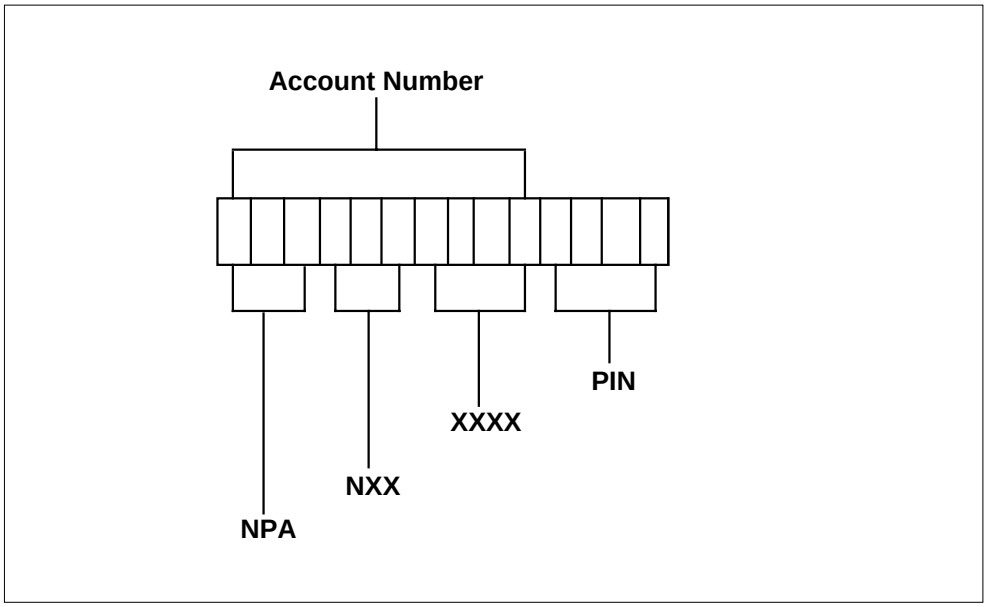

RAO Number Format (background, AF2017)

The RAO Number format is a fixed length format 14 digits in length. The format has two main parts. The two parts the Account Number and the PIN.

The Account Number is 10 digits in length and contains the following fields:

- RAO—Revenue Accounting Office, 3 digits in length, ranges in value from 600-799
- 0/1XX—3 digits in length, first digit is 0 or 1, X ranges in value from 0-9
- XXXX—4 digits in length, X ranges in value from 0-9

The RAO Number format can differ from the Directory Number format. The difference occurs when a 0 or 1 is present in the fourth digit of the Account Number.

The PIN is four digits in length and contains one field:

- PIN—Personal Identification Number, four digits in length, ranges in value from 2000-9999

The format of the RAO Number calling card format appears in the following figure.

Expanded Calling Card Format SS7 (continued)

RAO Number Calling Card Format

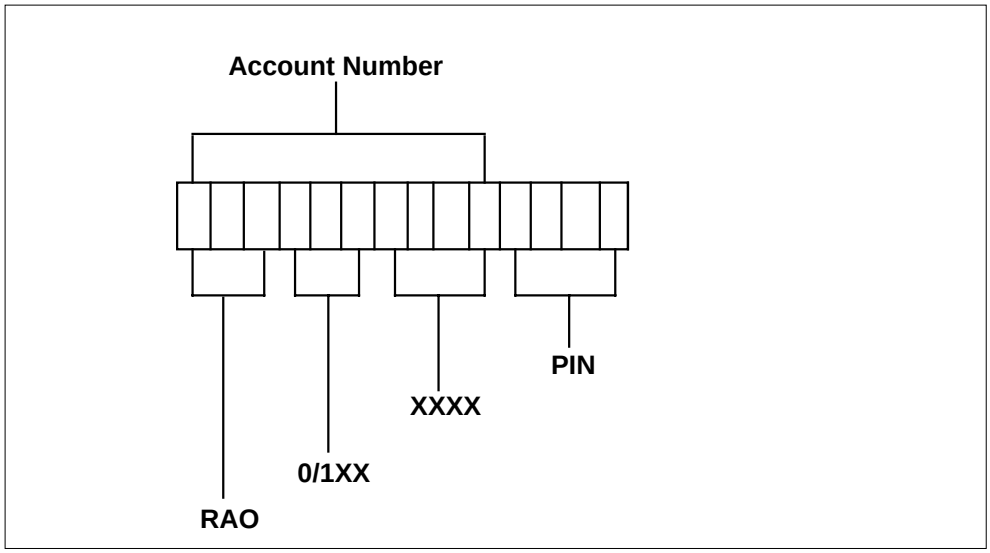

CCITT Format (background, AF2017)

The CCITT calling card format provides a world-wide standard for telecommunications calling cards. The CITT format is a new format and that TOPS supports when this feature is present.

The CCITT format, which this feature implements, is a variable length format 5-23 digits in length. The CITT format has four main parts. These parts are the Issuer Identification Number, the Individual Account Identification Number, the Luhn Check Digit and the PIN.

Issuer Identification Number: A number that is 4-7 digits in length and contains the following fields:

- MII—Major Industry Identifier. This field is two digits in length. Each digit ranges in value from 0-9. Each digit identifies the industry of the card issuer. Value 89 is assigned for telecommunications
- CC—Country Code. This field is 1-3 digits in length. Each digit ranges in value from 0-9. Each digit identifies the country code or world zone of the card issuer. Value 1 is assigned for North America
- IIN—Issuer Identifier Number. This field is 1-4 digits in length, fixed for a specified Country Code. Each digit ranges in value from 0-9. Each digit identifies the card issuer in a Country Code. The length of three digits is assigned for North America. The combined length of CC and IIN cannot exceed 5 digits for a Country Code.

Expanded Calling Card Format SS7 (continued)

Individual Account Identification Number: A number that is 0-14 digits in length and contains one field. This fields is the Individual Account Identification NumberI (AIN). This field is 0-14 digits in length and is fixed for a specified Issuer Identification Number. Each digit ranges in value from 0-9.

> ***Note:*** A zero (0) length Individual Account Identification Number is possible given the definition of the CCITT format. This value does not have a practical use.

Luhn Check Digit: A number that is one digit in length and contains one field LCD—Luhn Check Digit. This field is one digit in length and ranges in value from 0-9. This field provides local screening of the calling card with a format check.

> ***Note:*** The combined length of the Issuer Identification Number, Individual Account Identification Number, and Luhn Check Digit cannot exceed 19 digits. The combined length is the Primary Account Number length.

PIN: A number that is 0-4 digits in length and contains one field. This field is the Personal Identification Number (PIN). This field is 0-4 digits in length. Each digit ranges in value from 0-9.

> ***Note:*** A zero (0) length Personal Identification Number is possible given the definition of the CCITT format. This value is not recommended because of security reasons.

The layout of the CCITT calling card format appears in the following figure. This field, and the individual fields, is a variable length format. The fields in the figure can overlap. Fields appear to extend from the the top left possible position to the top right possible position in relation to other fields.

Expanded Calling Card Format SS7 (continued)

CCITT Calling Card Format

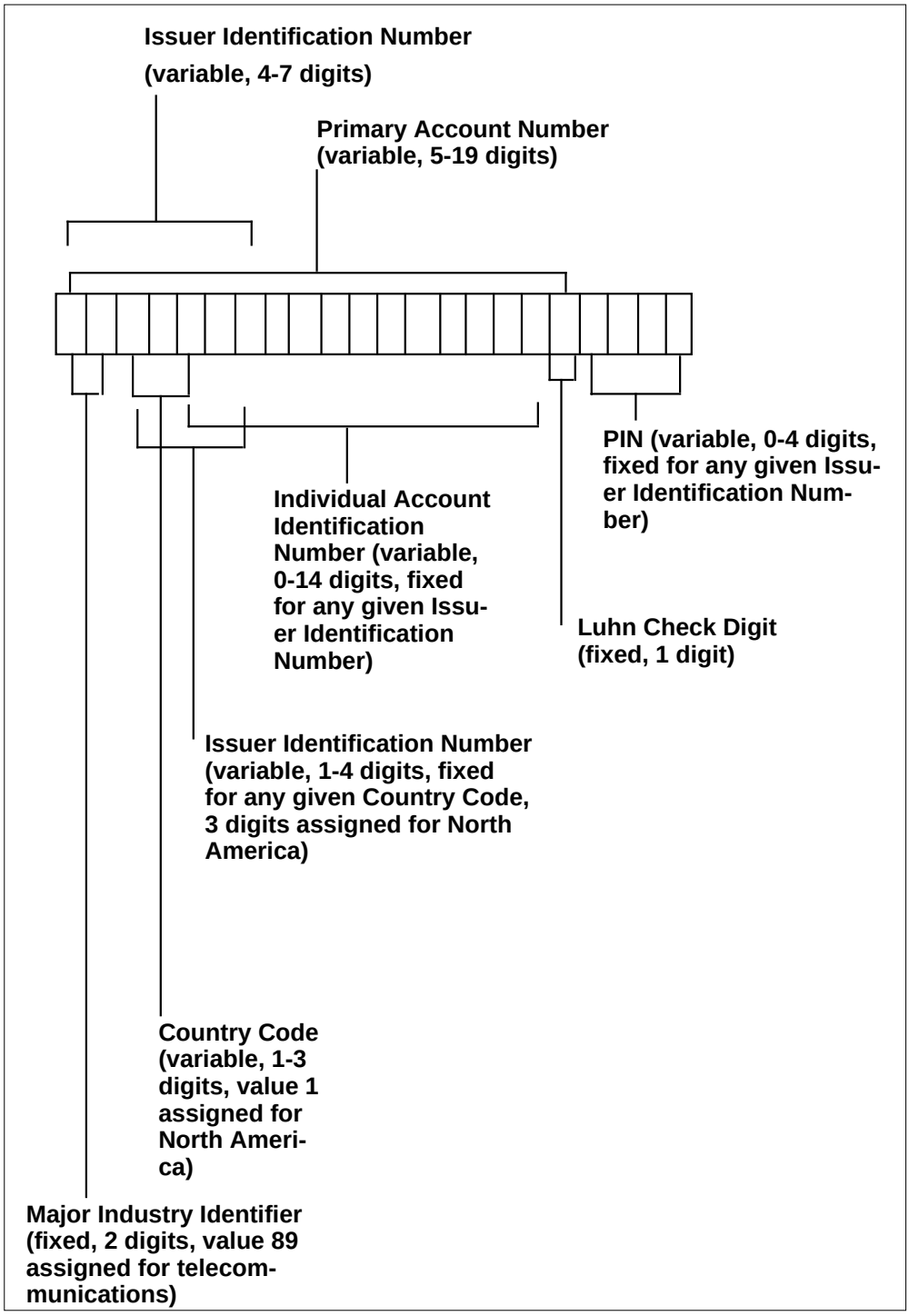

Expanded Calling Card Format SS7 (continued)

Calling Card Validation (background, AF2017)

The following is a summary of how 14 digit format calling cards are validated. The summary is *not* a complete description of this process.

The validation steps of a 14 digit format calling card are different for validation that is automated and not automated. The two methods have common validation capabilities.

> ***Note:*** This document assumes that package Exchange Alternate Billing Service is present. When this package is not present, some parts of this document do not apply.
>
> This package is not a requirement for this feature.

Common Validation Capabilities (background, AF2017)

Table Hot List (HOTLIST) records numbers that are HOT. HOT numbers are for occurrences of fraud or for numbers classified as invalid. This table is a local cache of numbers that are not valid until the number is marked as not valid in a database. A calling card number that matches an entry in table HOTLIST is not valid. Use of the number cannot occur for billing.

MAP example for table HOTLIST

```
HOTNUM
_____________________________________________________
21222059237420
40773737372492
91999180644923
```

In the above example, calling card number 91999180644923 is marked as HOT and cannot alternately bill a call.

Table CCVPARMS specifies to which database the system sends a Calling Card Validation or a Billed Number Screening query. Table CCVPARMS specifies when manual validation can occur for the number. The calling card number indexes Table CCVPARMS through table CCVINFO for calling card validation. Table CCVPARMS returns:

- Line Information Database (LIDB)
- Billing Validation Center (BVC)
- Network Services Database (SDB)
- manual validation (MANUAL)
- block (BLK).

Expanded Calling Card Format SS7 (continued)

Note 1: The Billing Validation Authority (BVA) can be another name for the Billing Validation Center (BVC).

Note 2: Canada uses the Network Services Database (SDB). This section does not describe the SDB.

MAP example for table CCVINFO

IDX	PARMSIDX	CARRIDX
212220	0	0
407737	297	0
919991	300	0

MAP example for table CCVPARMS

```
        IDX                    VALAREA
 -------------------------------------
          0     LIDB  $ N   2 N  0   0
         10     LIDB  $ N   2 N  0  10
        297                        BVC
        298                        SDB
        299                        BLK
        300                     MANUAL
```

In the above examples, the system sends calling cards that begin with the digits 212220 to a LIDB that uses Common Channel Signaling Number 7 (CCS7). The system sends calling cards that begin with the digits 407737 to BVC. Calling cards that begin with the digits 919991 are manually validated.

When table CCVPARMS indicates that performance of a database query must occur, the system sends a database query to the appropriate database. A response indicates when the calling card is valid. Table CCVPARMS can indicate that manual validation is a requirement. When this event occurs, the operator manually validates the calling card with an Inward operator or an automated system. When the operator uses an Inward operator, the following events occur:

Expanded Calling Card Format SS7 (continued)

1 The operator places an Inward call to an Inward operator.

- KP FWD + 1160 + START on the TOPS IV
- Cld + 1160 + Start on the TOPS MP

2 The operator voice quotes the calling card to the Inward operator.

3 The Inward operator validates the calling card and voice quotes the validity of the calling card.

4 When the operator uses an automated system, the following events occur:

5 The operator connects to the automated system with an Outgoing Trunk Key.

6 When the connection occurs, the operator waits for a tone that the operator must outpulse the calling card.

7 When the operator hears the tone, the operator outpulses the calling card to the automated system.

- KP SPL + START on the TOPS IV
- Fncts + {Verify Special} + Start on the TOPS MP

8 The automated system announces the validity of the calling card.

Non-Automated Validation (background, AF2017)

For carrier calls, TOPS serves the carrier with TOPS InterLATA Carrier Service (TICS).

When the 14 digit calling card is collected, the following steps validate the calling card:

1. The system checks the calling card against table HOTLIST for a match. When a match is present, HOT appears at the TOPS position, and operator practice determines when the procedure continues. When a match is not present, validation continues.
2. The system checks the calling card against table CCVPARMS for a match. When a match is present, the query type is determined. The query type can be LIDB, BVC, SDB, MANUAL, or BLK. When a match is not present, the query type is LIDB.
3. Determination of the method of validation occurs.
   a. When the query type is LIDB, the system launches a validation query to the LIDB. The position display indicates a query is in progress. The AMA VFY on TOPS IV or clock icon on TOPS MP appears.
   b. When the query type is BVC and *the call is not a carrier call*, the system launches a validation query to the BVC. The position display indicates a query is in progress. The AMA VFY on TOPS IV and clock icon on TOPS MP appears.

c. When the query type is BVC and *the call is a carrier call*, the system determines when to perform manual validation. The system determines when to accept the calling card, block the call, or launch a validation query to the BVC.

   i. When table TOPS Equal Access Carrier (TOPEACAR) fields CCVQUERY = NOQUERY and CCVVAL = Y, MAN appears at the position. Manual validation is performed, and the call is completed according to the manual validation result and operator practice. The process skips the steps that remain.

   ii. When TOPEACAR fields CCVQUERY = NOQUERY and CCVVAL = N, the system accepts the calling card and the call is completed. The process skips the steps that remain.

   iii. When TOPEACAR fields CCVQUERY = BLK and CCVVAL = N, the system blocks the call. The process skips the steps that remain.

   iv. When TOPEACAR fields CCVQUERY = QUERY and CCVVAL = N, a validation query launches to the BVC. The position display indicates a query is in progress. The AMA VFY on TOPS IV or clock icon on TOPS MP appears.

d. When the query type is MANUAL, a VFY appears at the position. Performance of manual validation occurs. The call is completed in accordance with the manual validation result and operator practice. The process skips the steps that remain.

4. The position display updates after a database response or a time-out waiting for a response. The AMA VFY on TOPS IV or clock icon on TOPS MP is erased. The special number display updates when a database response occurs.

   a. The RAO number appears when the calling card is valid and the PIN is not limited.

   b. The RAO number and R appear when the calling card is valid and the PIN is restricted.

   c. The calling card flashes when the calling card is invalid.

5. When a database response is received and the calling card is valid, the call is completed. When a database response is received and the calling card is invalid, the operator prompts the subscriber for the calling card again. The validation process begins again. When a database response is not received, operator practice determines if the call must be completed.

Expanded Calling Card Format SS7 (continued)

Automated Validation (background, AF2017)

Collection of the 14-digit calling card means the following steps must occur to validate the calling card:

1. The system checks the calling card against table HOTLIST for a match. When a match is present, the system prompts the subscriber to enter the calling card again. The validation process begins again. When a match is not present, validation continues.
2. The system checks the calling card against table CCVPARMS for a match. When a match is present, the system determines the query type. The query type can be LIDB, BVC, SDB, MANUAL, or BLK. When a match is not present, the query type is LIDB.
3. Determination of the method of validation occurs.
    a. When the query type is LIDB, the system launches a validation query to the LIDB.
    b. When the query type is BVC and *the call is not a carrier call,* the system launches a validation query to the BVC.
    c. When the query type is BVC and *the call is a carrier call,* the system determines when to perform manual validation. The system determines when to accept the calling card, block the call, or launch a validation query to the BVC.
        i. When TOPEACAR fields CCVQUERY = NOQUERY and CCVVAL = Y, the system routes the call to a TOPS position. MAN appears at the position. Manual validation is performed, and the call completes according to the manual validation result and operator practice. The process skips the steps that remain steps are skipped.
        ii. When TOPEACAR fields CCVQUERY = NOQUERY and CCVVAL = N, the system accepts the calling card and the call is completed. The process skips the steps that remain.
        iii. When TOPEACAR fields CCVQUERY = BLK and CCVVAL = N, the system blocks the call. The process skips the steps that remain.
        iv. When TOPEACAR fields CCVQUERY = QUERY and CCVVAL = N, launch a validation query to the BVC.
    d. When the query type is MANUAL, datafill determines when the call completes, or routes to a TOPS position for manual validation. When the VFY routes to a TOPS position, the VFY appears at the position. Performance of manual validation occurs, and the call completes

according to the manual validation result and operator practice. The process skips the steps that remain.

4. When the database response indicates a valid calling card, the call completes. Ror another condition, the system prompts the subscriber to enter the calling card again. The validation process begins again.

New functionality (AF2017)

CCITT Calling Card Format Changes to TOPS (AF2017)

This section describes changes to TOPS to support the CCITT calling card format. Modification of the TOPS occurs in the following areas to support the new CCITT calling card format:

- The TOPS IV and TOPS MP positions are improved to accept and display CCITT calling cards.
- The TOPS AMA has an improvement to record the billing information that associates with CCITT calling cards.
- The TOPS calling card validation capabilities are improved to allow validation of CCITT calling cards in a specified format.

The CCITT calling card format allows a minimum card length of 5 digits and a maximum card length of 23 digits. This event occurs to improve TOPS IV and MP Positions. This variable length format requires changes in the key processing and display of numbers. These numbers are on the TOPS IV and TOPS MP positions.

Position Key Processing (AF2017)

The KP SPL key on the TOPS IV position and the SPL key on the TOPS MP position enter numbers for alternate billing. Examples of these numbers are bill-to-third numbers and calling card numbers. The number key processing can accept the longer special number because of the following:

- the CCITT calling card format allows a calling card number with a maximum length of 23 digits
- the current maximum length of a special number is 14 digits

The KP SPL key processing on the TOPS IV position and the SPL key processing on the TOPS MP position are modified. This change allows the

Expanded Calling Card Format SS7 (continued)

entry of special numbers of a maximum of 23 digits in length. This condition allows for the entry of the maximum length CCITT calling card.

Note: Package Expanded Calling Card Format SS7, ABS00101, made the changes to the TOPS IV key processing. The changes are documented here for completeness.

Position Displays (AF2017)

The Special Number fields of the TOPS IV and TOPS MP positions display special numbers and information about these numbers. For example, a 14 digit calling card can appear, followed by RAO R. This event indicates to the operator that the calling card has a restricted PIN. The Special Number fields of the TOPS IV and TOPS MP positions are altered. This change accommodates the display of the longer calling card because:

- the CCITT calling card format allows a calling card with a maximum length of 23 digits
- the display of this longer calling card overwrites present displays in the Special Number field.

Note: The RAO stands for a three digit number, for example, 627.

A special number appears formatted or not formatted. The status of the special number determines how the number appears. A special number that is not formatted is invalid. The invalid number flashes when the number appears at the position with all digits of the number concatenated. The connection indicates that spaces or dashes are not present between the digits. The TOPS cannot determine what type of special number was entered. Examples of special number types are a bill-to-third or calling card. A formatted special number appears at the position with dashes between sections of the special number. An example is an inserted dash between the last digit of the account number and the first digit of the PIN when a formatted 14 digit calling card appears. Examples of TOPS IV position displays for an invalid special number that is not formatted and a formatted, valid 14 digit calling card appear in the following figure.

Expanded Calling Card Format SS7 (continued)

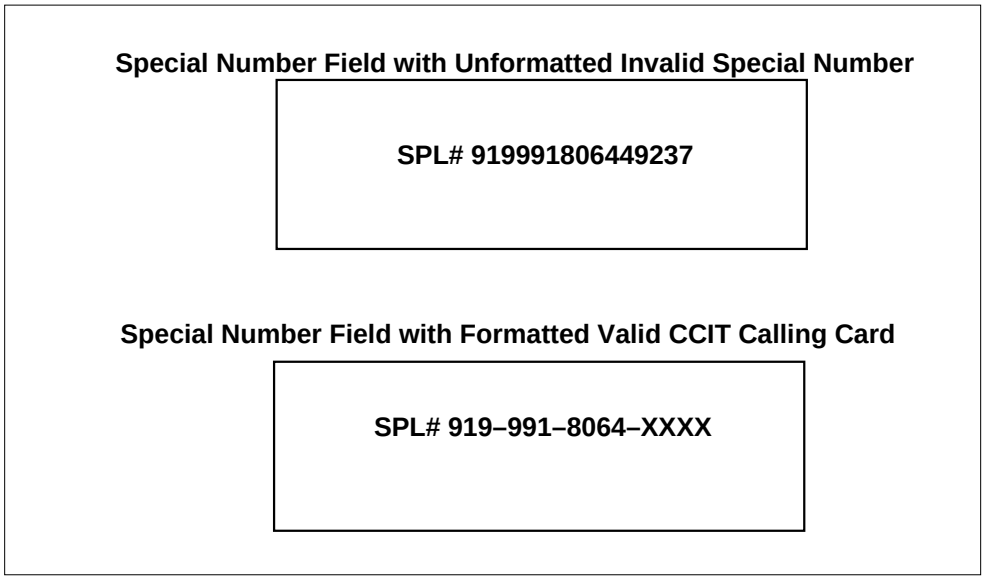

The CCITT calling cards are always formatted when the cards appear at the position. If the CCITT calling card is invalid because of format checks, the Issuer Identification Number appears. A dash and any remaining digits follow the Issuer Identification Number. A CCITT calling card that passed format checks appears at the position. The card has a dash between the Issuer Identification Number and the first digit in the Individual Account Identification Number. If a PIN is present, a dash also appears between the Luhn Check Digit and the PIN. Example TOPS IV position displays for formatted, invalid and valid CCITT calling cards appear in the following figure.

Expanded Calling Card Format SS7 (continued)

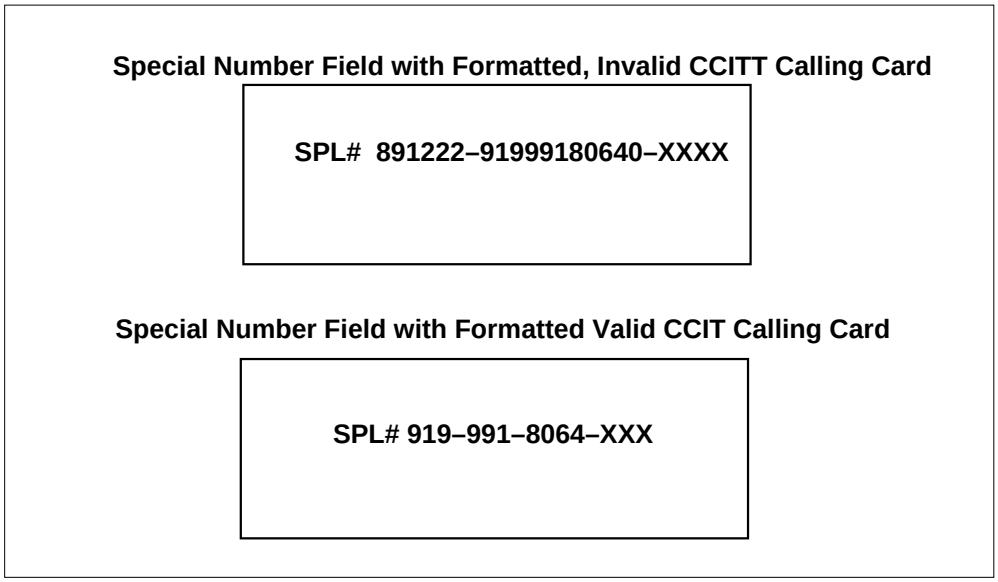

The length of the CCITT calling card means that all display locations for information associated with a special number move. The move occurs on both the TOPS IV and MP positions. An example of a special number is RAO. The display locations on the TOPS IV position are shifted to the right. Example TOPS IV position displays for 14 digit calling cards (before and after this feature) and the CCITT calling card appear in the following figure.

Note: The moved displays on the TOPS IV position are RAO R, RAO (no trailing R), VFY, MAN, ACC, and HOT.

Expanded Calling Card Format SS7 (continued)

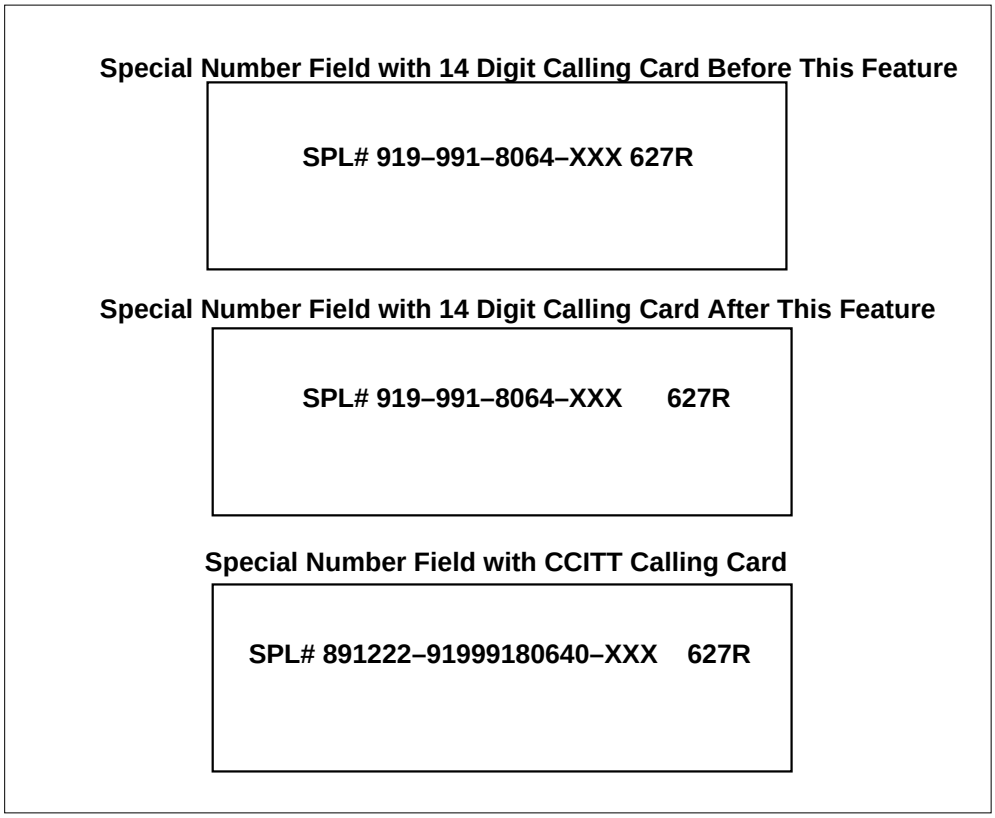

The display locations on the TOPS MP are shifted to the right in the Special Number field. The display location can also shift to the Application Message Area II. The TOPS uses this message area when the TOPS MP position performs a Toll and Assist function. An example of this function is alternate billing. Example TOPS MP position displays for 14 digit calling cards (before and after this feature) and the CCITT calling card appear in the following figure.

Note: The moved displays on the TOPS MP position are RAO R, RAO (no trailing R), Vfy, Man, Acc, Hot, and the clock icon.

Expanded Calling Card Format SS7 (continued)

Special Number Display for 14 Digit Calling Card Before this Feature

Application Message Area II (unused by Toll and Assist)

919–991–8064–XXXX 627 R

Special Number Display for 14 Digit Calling Card After this Feature

627 R Application Message Area II

919–991–8064–XXXX

Special Number Display for CCITT Calling Card

627 R Application Message Area II

891222–91999180640–XXXX

BellCORE AMA Enhancements (AF2017)

The TOPS Expanded BellCORE AMA Format (EBAF) is an optional BellCORE AMA format that feature package TOPS Extended BCAMA-EBAF, OSB00101, offers. This feature requires the TOPS EBAF to record the CCITT calling card information in AMA.

The TOPS EBAF is flexible. The TOPS EBAF allows for the definition of new structures (modules) to record new service information associated with a call. One of the modules defined in TOPS EBAF is the Alternate Billing module.

This module records alternate billing information associated with a call. This module contains fields to record AMA information for calls that are alternately billed.

The Alternate Billing module is present for all TOPS calls that are alternately billed with a calling card in the CCITT format. The definition of the module is not altered and the range of values supported in the module fields increases. For example, the Format Identifier field can record value CCITT Format. Refer to the AMA (AM) section of this Function Description (FN) and to the AMA (AM) section of this document for more details on TOPS EBAF. Refer to these sections for the modifications to the Alternate Billing module for recording the CCITT format calling card.

Validation of CCITT Calling Cards (AF2017)

This feature creates a new table, International Calling Card Format (INTCCFMT), that specifies the valid CCITT calling card formats. This feature contains information on the length of the Issuer Identification Number, the Individual Account Identification Number, and the PIN. This feature also indicates if the Individual Account Identification Number and PIN construct a 14 digit number to validate the calling card.

Example of Table INTCCFMT

ISSUERID	ACCIDSIZ	PINSIZE	VAL14DIG
891222	11	4	Y
891391	7	3	N
891840	8	4	N
8933345	6	4	N

Note: Package Expanded Calling Card Format SS7, ABS00101, created table INTCCFMT. Feature AF2017 adds new field VAL14DIG to the table and changes the range of acceptable values in field PINSIZE. The table appears here for completeness.

In the example above, field ISSUERID is the Issuer Identification Number of the CCITT calling card. This field is the index to the table. Field ACCIDSIZ contains the length of the Individual Account Identification Number plus the length of the Luhn Check Digit, which is always 1. Field PINSIZE contains the length of the Personal Identification Number. Field VAL14DIG specifies if the Individual Account Identification Number can form a 14 digit number that is in use for validation purposes. The identification number is concatenated to the front of the PIN. Refer to section CCITT Cards marked

Expanded Calling Card Format SS7 (continued)

for 14 digit validation. Example CCITT calling cards for the datafill in the preceding figure appear in the following figure.

Example CCITT Calling Calls

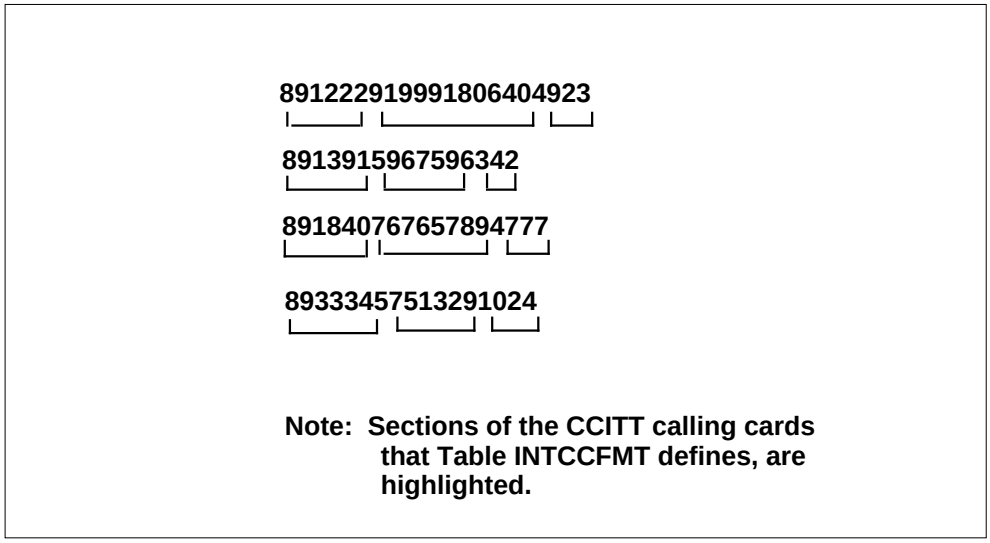

When the system collects a special billing number, the system checks the number against datafill in table INTCCFMT. If a match occurs, the special number is in the CCITT calling card format. A match occurs when an ISSUERID in table INTCCFMT matches the first digits of the special number. The system performs additional format checks described below. If the system does not find a match in table INTCCFMT, the system checks the special number for other formats. This feature does not continue to apply. Examples of other card formats are 14-digit calling card or bill-to-third number.

The collected special billing number indexed table INTCCFMT. A match occurred between a value in field ISSUERID and the first 4-7 digits of the special number. Next, the format requirements that the other fields of table INTCCFMT specifies are checked. If these fail, the special number is invalid. If these checks are passed, the Luhn Check Digit in the special number is checked against the expected Luhn Check Digit. If the Luhn Check Digit is invalid, the special number is invalid. If the Luhn Check Digit is valid, then the special number is a CCITT calling card.

When format checks passed and the special number is a CCITT calling card, the system determines the type of validation. Field VAL14DIG in table INTCCFMT is checked to determine if the Individual Account Identification Number, concatenated to the PIN, forms a 14 digit number for validation purposes.

Expanded Calling Card Format SS7 (continued)

CCITT Cards Marked for 14 Digit Validation (AF2017)

The Individual Account Identification Number and PIN of the CCITT calling card can form a 14-digit number for validation purposes. This number allows for a change from the 14-digit calling card format to the CCITT calling card format. A change is necessary at the time of this feature. The LIDB specifications that allow for the validation of CCITT format calling cards are not present. The construction of a 14-digit number from the CCITT calling card for validation purposes allows for the use of validation capabilities that are present for 14-digit calling cards.

If the field VAL14DIG in table INTCCFMT marks the CCITT calling card for 14-digit validation, (i.e. field VAL14DIG has value Y), the Individual Account Identification Number and PIN are used for validation. When field VAL14DAG marks the card for validation, field VAL14DIG has value Y. The PIN is concatenated to the end of the Individual Account Identification Number to form a 14-digit number for validation. This condition does not apply to the index of table CCVPARMS through table CCVINFO. This number is in use for validation as if a 14-digit calling card were collected, not a CCITT calling card. The following figure shows how the CCITT calling card constructs the 14-digit number for validation.

Note: During the transitional validation, the Issuer Identification Number indexes table CCVPARMS through table CCVINFO.

Construction of 14 Digit Validation Number from CCITT

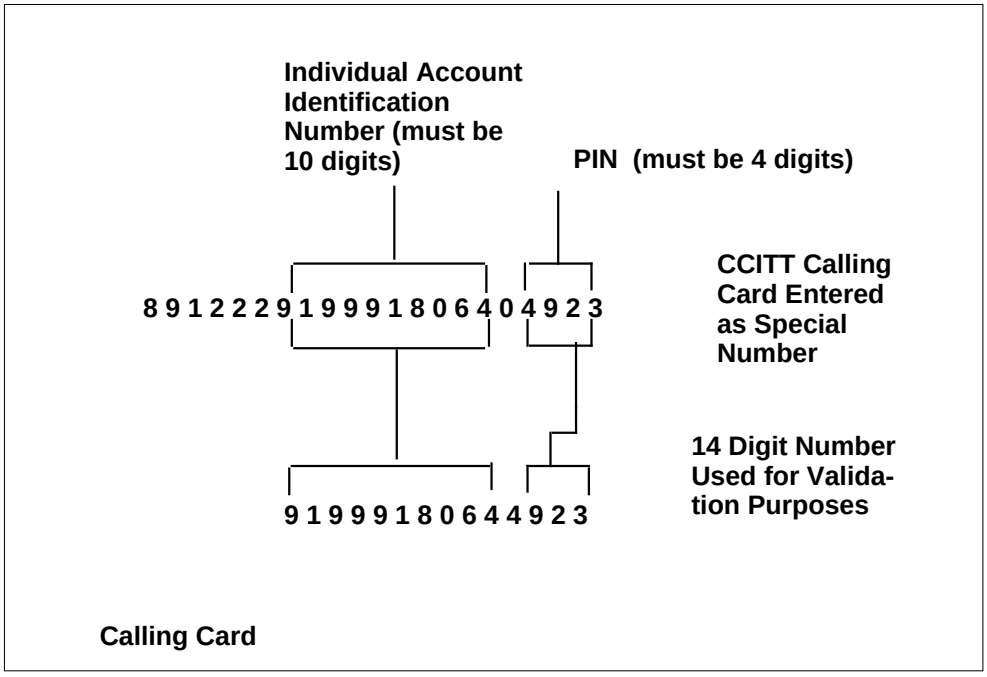

Expanded Calling Card Format SS7 (continued)

A difference between this special case of the CCITT calling card format and an 14-digit calling card does not occur for validation purposes. The indexing table CCVPARMS through table CCVINFO is an exception. Performance of all validity checks on 14-digit calling cards occur on the Individual Account Identification Number plus PIN.

CCITT Cards Not Marked for 14 Digit Validation (AF2017)

The field VAL14DIG in table INTCCFMT does not mark the CCITT calling card for 14-digit validation. In this event, the card is processed as a CCIT (ISO) calling card. Field VAL14DIG marks the card for validation when the field has the value of N. The system sends the card to the database table CCVPARMS. The database specifies (pre TOPS03) or table INTCCFMT (TOPS03 by feature AN0409 in functionality ABS00101, TOPS Commercial Credit Card).

This restriction will be removed. Datafill in table CCVPARMS applies when LIDBs can handle validation queries for CCITT calling cards.

Luhn Check Digit Calculation (AF2017)

The Luhn check digit that the CCITT calling card format uses is based on the Luhn formula for modulus 10 check digits. This formula uses all digits in the Primary Account Number. This number excludes the last digit that is the Luhn Check Digit. This formula is applied to the CCITT calling card format.

The algorithm that calculates the check digit appears below:

1. Start with the right-most digit in the Primary Account Number, and exclude the Luhn Check Digit. Double the number.
2. Take the tens place digit and the units place digit of the product just formed and add to a running sum. If the tens place digit is not present, add the units place digit.
3. Repeat this calculation for each digit that alternates in the Primary Account Number. Go from right to left.
4. Add all digits in the Primary Account Number not already doubled to the running sum.
5. Subtract the running sum from the next higher value of 10. Do not perform this procedure if the running sum is an even multiple of 10. If the sum is an even multiple of 10, the check digit is 0.
6. The result is the check digit.

The following figure displays the calculation of Luhn Check Digits for Primary Account Numbers 89145770836 and 8914567219. These numbers exclude the calculation of the Luhn Check Digits.

Expanded Calling Card Format SS7 (continued)

Calculation of Luhn Check Digit

```
  8   9    1    4    5   7    7   0    8   3    6
x 2      x 2       x 2       x 2       x 2       x 2
—   —    —    —    —   —    —   —    —   —    — –
1+6  +9  +2   +4  +1+0  +7  +1+4 +0  +1+6 +3  +1+2 = 48

 50
–48
——
  2 = Luhn Check Digit for Primary Account Number  89145770836

 8    9    1    4   5    6   7    2   1    9
     x 2       x 2       x 2       x 2       x2
—   —   —   —   —   ——   –   —   —   —
+8  +1+8 +1  +8  +5 +1+2  +7   +4  +1  +1+8=55

 60
–55
——
  5 = Luhn Check Digit for Primary Account Number  8914567219
```

Background (AF2020)

Exchange Alternate Billing Service (background, AF2020)

The Exchange Alternate Billing Service (EABS), ABS00101, feature package allows the Operating Company to query a Line Information Data Base (LIDB). This query function uses the Common Channel Signaling Number 7 (CCS7) protocol for validation of a fixed 14-digit format calling card number. The EABS follows E800/SSP service as the second transactions-based service that Transaction Capabilities Application Part (TCAP) supports.

Note: Refer to Expanded Calling Card Format SS7, ABS00101, for a description of the different calling card formats.

This feature is an extension of these capabilities to accommodate the Expanded Calling Card format. This format is a subset of the International Telephone and Telegraph Consultive Committee (CCITT) calling card format. The system specifies the CCITT calling card format in CCITT Recommendation E.118. The International calling card format is another name for this format.

Expanded Calling Card Format SS7 (continued)

TOPS Expanded Calling Card Format (background, AF2020)

The Expanded Calling Card Format SS7, ABS00101, verifies the CCITT calling card format in the TOPS switch. The package also provides for recording in both NT and Bellcore EBAF. Automatic Message Accounting (AMA) records. The package also collects and displays the CCITT format on the TOPS-MP and TOPS-IV positions. The documentation for package Expanded Callling Card Format SS7, ABS00101, contains a description of the different calling card formats. Refer to that package for the description of the CCITT card.

Note: The EBAF is a requirement for this feature. Refer to package TOPS Extended BCAMA-EBAF, OSB00101, for a description of EBAF.

Manual or Inward Operator validation was necessary with package Expanded Calling Card Format SS7, ABS00101. The AF2020 provides for automatic validation of the Expanded Calling Card format over a CCS7 network.

Sequence Calling (background, AF2020)

A subscriber can start a sequence call when the subscriber receives on ringing tones, busy tones, or when the called party goes onhook. To start a sequence call, the subscriber stays offhook and presses the octothorpe (#). The system prompts the subscriber to enter another called number. The system billed the first call to the calling card number of the subscriber. The system bills all sequence calls to the same card number that does not require the subscriber to enter the calling card number.

Before BCS 31, a query to the billing validation database on a sequence call did not validate the calling card number again. Validation did not occur because the number was not part of the requirements when the implementation of the sequence calling occurred. This feature provides for a re-validation query to occur for the billing validation database on each sequence call. The re-validation is optional for traditional 14-digit calling cards by setting an office parameter, MCCS_SEQ_QUERY. The re-validation is optional for each card issuer for Expanded format. Datafill in the International Calling Card Format (INTCCFMT) table provides the re-evaluation.

The sequence call queries are desired for two reasons:

- additional queries to the database can aid in fraud detection
- certain card issuers can mandate in the contract with an Operating Company to query on every call, initial or sequence

In these cases, the Operating Company must set the SEQQRY field in table INTCCFMT to Y for the card issuers. The operating company engineers the switch to allow for the additional load.

Expanded Calling Card Format SS7 (continued)

This query is transparent to the subscriber, other than a delay in the processing of the call. If the database responds that the card is invalid for the call, the subscriber receives the customer keying error announcement. The system requests that the subscriber enter another called number. If the database does not respond, datafill determines if the call proceeds or blocks.

New functionality (AF2020)

A call requires a calling card validation when:

- a call arrives at an operator position and the subscriber gives the operator a calling card number
- an automated operator system handles a card and a subscriber enters a calling card number with the use of a telephone keypad

SS7 System

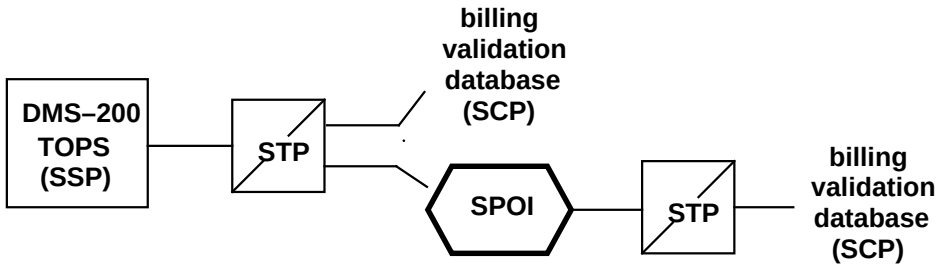

SSP – Service Switching Point
STP – Signaling Transfer Point
SCP – Service Control Point
SPOI – Signaling Point of Interface

The DMS formats a database query, and the system sends the query with an STP over a CCS7 network. The STP translates on the global digits to formulate the destination address. The system uses switching in the SPOI to send the query to an SCP or to another STP.

International calling cards have a card issuer identification. Card issuers can have different needs that depend on the configuration of the network/ database. Some information must be determined for each card issuer.

The Global Title Translation expands from 6 to 12 digits. This procedure restricts the Expanded Calling Card to a minimum of 12 digits plus the PIN.

Expanded Calling Card Format SS7 (continued)

Table INTCCFMT (AF2020)

The system created table INTCCFMT to provide information for CCITT format calling cards for each card issuer. The feature expands this table to contain the following new fields:

- CLDNUM -- If the called number must be obtained, when possible, before a query to the billing validation database is launched.

  The inclusion of the called number in the query is optional. Datafill in table INTCCFMT, field CLDNUM determines this condition for each card issuer base. If the called number is non-nil, the number contains the first 10 digits of the number. If the called number is less than 10 digits (e.g. N11), the number is left justified and padded on the right with zeroes in the called number parameter. Called numbers greater than 10 digits are truncated on the right to 10 digits. Some international numbers are greater than 10 digits.

  If table INTCCFMT indicates that the called number must be present in the query, the software goes in a waiting state. This state continues until the operator enters the called number. An operator does not enter a directory assistance number (e.g. 411 or 555-1212) as a forward number. This condition applies to Toll and Assist (TA) calls only.

  The called number is available for most calls that TOPS handle. There are instances in the DMS when the called digits are not available and cannot be available when a query is sent to a billing validation database. These include:

  — all operator handled directory assistance (DA) calls

  — all inwards validation calls.

  In these occurrences, the system sends all zeroes to the billing validation database. Determination if the calling card is valid or invalid is left to the database. The system sends the query even though datafill in table INTCCFMT indicates the requirement of a called number. The requirement is for the card issuer where a called number is not possible to obtain.

  The called number required parameter only applies to subscriber originated TA calls. The system sends a query to all other call types when a calling card number is present. The call must also be correctly class charged.

- SEQQRY -- A launch of a query to the billing validation database on a sequence call for the card issuer.

  When the calling party starts a sequence call, the calling card number does not need to be entered again. Some card issuers can require a new calling card query because validity of the calling card can be based on new

information available on a sequence call. For example, a card issuer can place restrictions on the following:

- called numbers
- time of day restrictions on the card
- number of times the card is in use for a given period of time
- additional information

The following determine if a query occurs for a sequence call:

- datafill in table INTCCFMT field SEQQRY, for Expanded format cards
- a new office parameter, MCCS_SEQ_QUERY, for traditional 14-digit format

When a query is launched for a sequence call, this query includes the new called number. If a query fails, standard treatment for calling card validation failure is applied.

- TIMEOUT -- The number of seconds to wait in the application for a response from the database before time-out treatment is initiated.
- QRYBLK -- When a time-out does occur, this field determines the treatment of the call. The system blocks the call or allows the call to proceed without validation of the calling card.

  After the DMS sends a query to a billing validation database, the DMS waits for a pre-determined period of time for a response from the database. If the DMS does not receive a response in the allotted time, datafill determines if the call can proceed. This datafill is on a card issuer base for Expanded CC queries. Table INTCCFMT, field QRYBLK indicates if the system blocks a call on a time-out or allows the call to proceed without verification.

  Queries that time out impact operator average work time (AWT). The higher this value is set, the greater the impact on AWT.

  Note: For the traditional 14-digit format queries, the office parameter ACCS_QUERY_TIMEOUT determines the time-out value. This parameter has a recommended value of 2 s. The value of office parameter TOPS_ACCS_CCV_QUERY_BLK determines if the system blocks the call on a time-out condition or allows the call to proceed without verification.

Expanded Calling Card Format SS7 (continued)

In addition to time-outs, field QRYBLK blocks Expanded CC query calls or allows the calls to proceed for the following conditions:

— All reject component type errors that component/parameter format errors cause

— Cannot query the database

— Database overload

- GTNAME -- The Global Translation Type name.

  The SCCP layer uses the character string entered in field GTNAME to obtain the Global Title Translation Type value from table C7GTTYPE. You must enter the character string in table C7GTTYPE before you enter the string in field GTNAME of table INTCCFMT. The Global Title Translation Type value, entered in table C7GTTYPE against the GTNAME, that the STP inserts in the query message. The STP uses the Type value to determine which translation table to use. The table translates the Global Title digits in a network address.

These new fields are in table INTCCFMT only if package Expanded Calling Card Format SS7, ABS00101, is present in the office. A sample table for reference purposes appears in the following table.

MAP example for table INTCCFMT

```
ISSUERID ACCIDSIZ PINSIZE VAL14DIG CLDNUM  SEQQRY *1  *2  *3
_____________________________________________________________
891222     11        4        Y       N       N    2   N   $
891391      7        3        N       N       Y    2   Y   $
89133345    6        4        N       N       N    2   Y   $
891223     15        4        N       Y       Y    3  N EXPND
891469     16        4        N       Y       N    4  Y ACCS3


       *1 = TIMEOUT
       *2 = QRYBLK
       *3 = GTNAME
```

Translations table flow

Translations table flow is not provided.

Limits

The following limits apply to Expanded Calling Card Format SS7.

Expanded Calling Card Format SS7 (continued)

AF2017 - TOPS Screen and Bellcore AMA Expanded Calling Card

Refer to the following list:

- The office in which this feature is present must use TOPS EBAF AMA format in Phase 1 or Phase 2. These phases correctly record AMA records for calls alternately billed to a calling card in the CCITT calling card format.
- Abbreviated dialing omits leading digits 891 when entry of the CCITT format calling card occurs. This feature does not support abbreviated dialing. This condition does not affect Abbreviated dialing for 14 digit calling cards. Abbreviated dialing for 14 digit calling cards is dialing the PIN. The called number matches the first 10 digits of the calling card.
- This feature does not work with the Automated Alternate Billing Service, ABS00101, and TOPS Voice Service Node features. This condition occurs because these features cannot currently collect CCITT format calling cards. These packages are expected to support the CCITT calling card format in a following Batch Change Supplement (BCS).
- The maximum PIN length this feature supports for CCITT calling cards is 4 digits. This value does not comply to CCITT Recommendation E.118 or Operator Services Systems Generic Requirements to Support Alternate Credit Card Format. These formats specify a maximum PIN length of 16 digits.
- This feature does not support Overseas Operating Center (OOC).
- This feature allows a BVC to verify CCITT format calling cards if field VAL14DIG in table INTCCFMT is set to Y. BellCORE specifies that calling cards a BVC verifies must receive module 061, Bimodality Alternate Billing. Module 061 does not support the CCITT format. Module 052, Alternate Billing, is in use This condition does not comply to BellCORE standards.
- If TOPS Operator Centralization is in use, the Host and all subtending Remotes must be at BCS29 or a later version.

AF2020 - TOPS Expanded Calling Card Format - CSS7 Validation

Refer to the following list:

- Automatic Call/Code Gapping

  This feature does not make changes to ACG. The feature supports ACG for CCITT calling card format queries on the first six digits of the calling card number. Controls are implemented for a card issuer the first six digits in the CCITT format and not a particular database.

- Called numbers

Expanded Calling Card Format SS7 (continued)

Instances in the DMS when the dialed digits are not available for the query can include the following:

— All operator handled directory assistance (DA) calls

— All inwards validation calls. For these calls, the system sends the query to the database and the called number field in the query contains all zeroes.

Change in operator practice is not required to obtain the called number on a 0- call. But, *the Operating Company must understand that the average work time (AWT) of an operator can increase on some calls*. Before BCS31, the query to the billing validation database occurred with entry of the calling card number. The entry occurred without regard to the presence or absence of the called number. This condition does not apply when the system receives only the PIN for billing. The operator can obtain other information like called number when the database processed the query. With this feature, certain card issuers can require the system to obtain the called number and to include the number in this query. The system can delay the query until entry of the called number occurs. The operator can experience a delay up to the length of the time-out value for that card issuer as entered in table INTCCFMT, field TIMEOUT.

The called number required parameter only applies to subscriber originated TA calls. For all other call types, the system sends a query as soon as possible. This condition occurs when a calling card number is present and the call is correctly class charged.

- Size of calling card number

  Because the global title must be 12 digits for these calling cards, the number of digits in the Expanded calling card number must be 12 or more plus the 4-digit PIN.

- Miscellaneous

  This feature does not use table HOTLIST.

Interactions

The following paragraphs describe the interactions between Expanded Calling Card Format SS7 and other functionalities.

AF2017 - TOPS Screen and Bellcore AMA Expanded Calling Card

Refer to the following list:

- This feature (AF2017) is optional. The feature interacts with all TOPS calls that use the CCITT calling card format for alternate billing. This condition includes the Basic TOPS (OSB00101), TOPS Extended

BCAMA-EBAFBC, OSB00101, and Exchange Alternate Billing Service, ABS00101, and TOPS Bellcore AMA, OSB00101, packages.

- This feature requires Basic TOPS (OSB00101), TOPS Bellcore AMA, OSB00101, and EBAF (ABS00101) feature packages.

AF2020 - TOPS Expanded Calling Card Format - CSS7 Validation

Refer to the following list:

- Automatic DA Call Completion (ADACC)

  The system sends a query to a billing validation database on the Toll and Assist (TA) part of an ADACC call. This condition occurs when the call is billed to a calling card, if the card was or was not the DA part billed to the same calling card.

- Sequence Calls

  Launching a query for those sequence calls on which a query is a requirement that affects real time processing for these calls. This condition can occur when the real time the initial query required is now incurred on every call in the sequence. Trunk holding times are increased. The system can place a greater demand on the DRAM for denied sequence attempts. The system must provision enough CCS7 datalinks to accommodate the additional traffic.

- Real Time

  The system impacts switch real time for those calls where a query occurs to a billing validation database because of this feature. The calls include the TA part of an ADACC call that is billed to a calling card and sequence calls that are not requirements.

- Average Work Time

  The average time an operator spends on each call is the average work time (AWT). This time can increase on calls where a card issuer mandates a called number in the query and the query is delayed until the operator enters the called number. The TIMEOUT value in table INTCCFMT can impact the AWT. This condition occurs for queries that time out before the response is received from the database. The greater the timeout value, the greater the impact on AWT.

- Transitional Calling Cards

  This package offers transitional capability between the traditional 14-digit format calling cards and the Expanded CC format. Refer to this module for a description of the transitional capability and the validation for these cards. When a calling card is indicated as transitional format (field VAL14DIG in table INTCCFMT), the enhancements of this feature does

Expanded Calling Card Format SS7 (continued)

not apply with the exception of the optional sequence call query. The query is office parameter MCCS_SEQ_QUERY.

- TOPS InterLATA Carrier Service (TICS)

  The Operating Company provides operator services for a carrier. Datafill in table TOPEACAR determines if the system sends a query to the BVC with the use of CCIS6 protocol. Table TOPEACAR does not apply to Expanded format calling cards. *Queries for Expanded format calling cards are sent to the database of the card issuer. The card issuer can or cannot be the same carrier that completes the call.*

  Note: Refer to package TICS, OSEA0101, for details.

  The TICS package is not a requirement for this feature.

Activation/deactivation by the end user

Expanded Calling Card Format SS7 does not require activation or deactivation by the end user.

Billing

Expanded Calling Card Format SS7 does not affect billing.

Station Message Detail Recording

Expanded Calling Card Format SS7 does not affect Station Message Detail Recording.

Datafilling parameters

The office parameters that Expanded Calling Card Format SS7 uses appear in the following table. For more information about office parameters, refer to *Office Parameters Reference Manual*.

Office parameters by Expanded Calling Card Format SS7

Table name	Parameter name	Explanation and action
OFCENG	ACCS_QUERY_TIMEOUT	Field TIMEOUT in Table INTCCFMT has priority over the office parameter ACCS_QUERY_TIMEOUT.

Expanded Calling Card Format SS7 (continued)

Office parameters by Expanded Calling Card Format SS7

Table name	Parameter name	Explanation and action
OFCENG	TOPS_ACCS_CCV_QUERY_BLK	Field QRYBLK has priority over the office parameter TOPS_ACCS_CCV_QUERY_BLK. These apply to Expanded format calling card queries only.
OFCVAR	MCCS_SEQ_QUERY	A new office parameter, MCCS_SEQ_QUERY, determines if a query for every sequence call that is billed to a traditional 14-digit format calling card is necessary. This office parameter is for CCIS6 queries to the Billing Validation Center (BVC) and CCS7 queries to the LIDB. The BVC is Billing Validation Authority (BVA). The default value is N.

Datafill sequence

The tables that require datafill to provide Expanded Calling Card Format SS7 appear in the following table. The tables appear in the correct entry order.

Datafill requirements for Expanded Calling Card Format SS7

Table	Purpose of table
CCVPARMS	Calling card validation. This table specifies the database where a Calling Card Validation or a Billed Number Screening query is sent. The table also specifies performance of a manual validation.
HOTLIST	TOPS Domestic - Hot List Table. This table records special numbers that are invalid.
C7GTTYPE	CCS7 Global Title Translation Type Table
INTCCFMT	International Calling Card Format Table. This table specifies the format of each valid CCITT calling card.
ACCSDB	ACCS Data Base Table

Datafilling table CCVPARMS

Datafill for Expanded Calling Card Format SS7 for table CCVPARMS appears in the following table. The fields that apply to Expanded Calling Card Format

Expanded Calling Card Format SS7 (continued)

SS7 appear in this table. See the data schema section of this document for a description of the other fields.

Datafilling table CCVPARMS

Field	Subfield or refinement	Entry	Explanation and action
	VALTYPE		This feature does not change this table. For non-transitional Expanded calling cards, the values LIDB for validation over the SS7 network, MANUAL or BLK can be used. When LIDB is entered in field VALTYPE, LIDB indicates that a CCS7 query is formatted. The LIDB sends the formatted CCS7 query to the STP to route over the proper SS7 network to a billing validation database. Transitional CCITT calling cards are cards that have a traditional 14-digit DN or RAO format number. The card issuer and check digit are stripped off and the card number is validated as the traditional cards are validated.

Datafill example for tables CCVINFO and CCVPARMS

Sample datafill for tables CCVINFO and CCVPARMS appear in the following example.

MAP example for table CCVINFO

```
            IDX          PARMSIDX          CARRIDX
_______________________________________________________
          212220                0                0
          407737              297                0
          919991              300                0
```

Expanded Calling Card Format SS7 (continued)

MAP example for table CCVPARMS

```
IDX                              VALAREA
-------------------------------------
  0            LIDB  $ N   2 N  0   0
 10            LIDB  $ N   2 N  0  10
297                                 BVC
298                                 SDB
299                                 BLK
300                              MANUAL
```

Datafilling table HOTLIST

Table HOTLIST does not change by this feature.

Datafill example for table HOTLIST

Sample datafill for table HOTLIST appears in the following example.

MAP example for table HOTLIST

```
                  HOTNUM
_____________________________________________________
              21222059237420
              40773737372492
              91999180644923
```

Datafilling table C7GTTYPE

Datafilling table C7GTTYPE

Field	Subfield or refinement	Entry	Explanation and action
GTTNAME			Add names for use in table INTCCFMT.

Datafilling table INTCCFMT

Datafill for Expanded Calling Card Format SS7 for table INTCCFMT appears in the following table. The fields that apply to Expanded Calling Card Format

Expanded Calling Card Format SS7 (continued)

SS7 appear in this table. See the data schema section of this document for a description of the other fields.

Datafilling table INTCCFMT

Field	Subfield or refinement	Entry	Explanation and action
CLDNUM		Y or N	Mandatory inclusion of the called number? Default is N.
SEQQRY		Y or N	Launch query for sequence call? Default is N.
TIMEOUT		2	Database response timeout values. The default is 2. Field TIMEOUT takes order over the office parameter ACCS_QUERY_TIMEOUT. This applies to Expanded format calling card queries only.
QRYBLK		Y	Treatment for call when timeout occurs? Field QRYBLK takes order over the office parameter TOPS_ACCS_CCV_QUERY_BLK. This applies to Expanded format calling card queries only.
GTNAME		alphanumeric	Global translation type name from table C7GTTYPE.

Datafill example for table INTCCFMT

Sample datafill for table INTCCFMT appears in the following example.

MAP example for table INTCCFMT

```
ISSUERID ACCIDSIZ PINSIZE VAL14DIG CLDNUM  SEQQRY *1  *2  *3
_____________________________________________________________
891222     11        4        Y       N       N    2   N   $
891391      7        3        N       N       Y    2   Y   $
89133345    6        4        N       N       N    2   Y   $
891223     15        4        N       Y       Y    3   N EXPND
891469     16        4        N       Y       N    4   Y ACCS3


        *1 = TIMEOUT
        *2 = QRYBLK
        *3 = GTNAME
```

Expanded Calling Card Format SS7 (end)

Datafilling table ACCSDB

Datafill for Expanded Calling Card Format SS7 for table ACCSDB appears in the following table. The fields that apply to Expanded Calling Card Format SS7 appear in this table. See the data schema section of this document for a description of the other fields.

Datafilling table ACCSDB

Field	Subfield or refinement	Entry	Explanation and action
PINNUM		0000-9999	This table provides a process to enter billing numbers for the local ACCSTEST application to simulate database responses from the LIDB. The PINNUM field in this table expands to allow a range of 0000-9999. The old range was 2000-9999. The new range allows tests with CCITT credit cards where the allowable pin range is 0000-9999. All other fields in table ACCSDB do not change. The ACCSDBKY key allows the entry of only 10 digits. For CCITT queries where the credit card number is greater than 10 digits, the simulator accesses table ACCSDB. The simulator uses the first 10 digits of the credit card number as the key.

Tools for verifying translations

Expanded Calling Card Format SS7 does not use translation verification tools.

SERVORD

Expanded Calling Card Format SS7 does not use SERVORD.

French/English AABS

Ordering codes

Functional group ordering code: ABS00101

Functionality ordering code: not applicable

Release applicability

TOPS12 and higher

Requirements

French/English AABS has the following requirements:

- BAS Generic, BAS00001
- Operator Services Basic, OSB00101, and table TOPSFTR parameter TOPS_ON_OFF_SWITCH = Y

Description

The following features provide this functionality:

Feature number	Feature name
NC0297	AABS Dual Language Capability
BK08101	Datafill requirement for VSNOPT (BCS35)
59006865	MD Code Removal and ReEngineering (TOPS12)

NC0297 - AABS Dual Language Capability

This feature provides the following functions:

- Operator handoff to a Voice Service Node (VSN) with a selection of languages.
- Operator queue selection based on the language of the calling party for Automated Alternate Billing Service (AABS) calls that present to an operator.

Operation

The following paragraphs describe the operation of French/English AABS.

NC0297 - AABS Dual language capability

In BCS32, the Talking Alternate Billing Services (TABS) from Northern Telecom introduced bilingualism to AABS. The TABS allows the VSN to prompt the subscriber for language selections. The VSN uses the subscriber selected languages for additional prompts. The VSN uses the subscriber

French/English AABS (continued)

selected languages to obtain billing acceptance when required. Refer to the Feature AF2801 MMI Enhancements for Bilingual AABS, BCS33: NTG232AA - French-English Bilingual AABS, in the TOPS VSN Feature Description Manual (450-1301-101) for more information.

This feature AABS dual language capability is an extension to the AABS bilingual capability. The feature contains two main parts. One part is operator handoff to AABS with selection of language. The other part is call queue selection based on language for AABS calls referred to an operator.

With the operator handoff feature, the operator can handoff calls with non-default language to the VSN to obtain billing acceptance. The feature increases the number of calls that the operator hands off to VSN. The increase in calls to the VSN reduces the operator work time. With the queue selection feature, calls that require operator support after handling by VSN route to the operator. The calls route to the operator based on the language that the subscriber selects. This feature eliminates the operator transfer time. This feature reduces the call setup time of the subscriber. The reduced call setup time provides better service to the subscriber.

This feature allows the operator to mark the language associated with a call for use in conjunction with the TOPS Queue Management System (QMS).

Handoff to AABS with language selections

The AABS automates call setup of some toll calls that are alternate billed calls. Before, the operator handled the toll calls. An operator sets up Dial Pulse (DP) calls, 0- calls and person-to-person calls. The operator can use one language to transfer calls to AABS for billing acceptance. The operator handoff function is available on all collect or bill-to-third calls routed to the operator. This function includes 0- and 0+, DP and dual-tone multifrequency (DTMF), automatic number identification (ANI) failure (ANIF), hotel room ID, and AABS route to operator calls.

This feature provides a language selection option. The operating company chooses the language selection option. The operator keys in the calling language or the calling and called language for a call that the operator hands off. The Call Begin message sends this information to the VSN. The message provides the VSN with information for using the designated languages. The VSN uses the languages to communicate with the calling and the billed parties when trying to obtain billing acceptance. This information prevents problems, reduces call setup time and provides better service to subscribers.

French/English AABS (continued)

The datafill for French/English AABS follows:

- Table TOPSLANG

  This table is new. This table allows an operator to mark a call with language selections.

- Table VSNOPT, parameter NUM_AUTO_LANGS_REQD_FOR_HANDOFF

  This parameter is new. This parameter indicates the number of languages that an operator must key in before handoff to the VSN. This parameter has subfield DEFLANG. When the value of this parameter is set to zero, you must enter subfield DEFLANG with the parameter value in one line.

- Table TOPSPARM

  — parameter LANG_DIGIT_INTERPRETATION

  This parameter is new. This parameter tells the DMS how to interpret the number of digits the operator keys in at a TOPS 04 position.

  — parameter LANG_ERROR_SCREEN_DISPLAY

  This parameter is new. An error message appears when the operator keys digits that are not correct. An error message occurs when an invalid number of digits at a TOPS 04 position.

Requesting an operator with Language choice

This feature allows VSN to request an operator with a chosen language. The VSNs that provide bilingualism to subscribers can prompt the subscriber to select the languages for the call. The subscriber can choose a calling language for communicating with the VSN. The subscriber can choose a called language for the VSN to communicate with the billed party if billing acceptance is required.

Before this feature, an AABS call that routed to an operator was put in the queue. The call type in Table TOPS indicates the queue. The operator that receives the call transfers the call to a second operator. The operator tranfers the call if the first operator does not speak the language that the caller chooses. This feature does not require the transfer of an AABS call for language reasons. A call routes to the designated queue served by an operator who understands the language that the calling party chooses. The call routes to the queue because the system places AABS calls in a call queue. The system places AABS calls in a queue based on the calling language selected for the call when the language is known. This action overrides the first Table TOPS call queue identification. This feature reduces the operator transfer time, subscribers time and provides a better service to subscribers.

French/English AABS (continued)

The AABS transfers a call to an operator when the following conditions occur:

- The billing method selection time-out, language selection time-out, or billing acceptance time-out period expires. The call exceeds the retry value.
- A subscriber gives a response that is not correct to AABS billing method prompts. The call exceeds the retry value at the VSN.
- A subscriber at a DTMF telephone dials 0, or flashes the hookswitch.
- A subscriber at a DP telephone flashes the hookswitch or times out.

Translations table flow

A description of the French/English AABS translations tables appears in the following list:

- Table TOPSLANG is new. The table allows an operator to mark a call with language selections.

The French/English AABS translation process appears in the following flowchart:

Table flow for French/English AABS

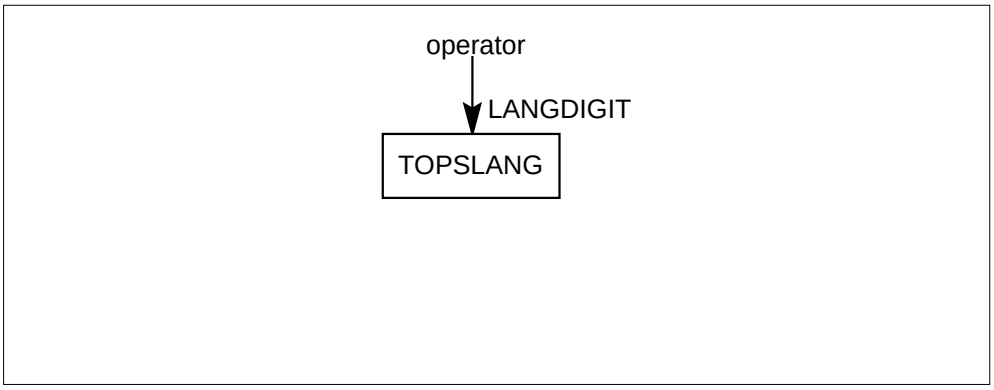

Limits

The French/English AABS has no limits.

Interactions

The following paragraphs describe the interactions between French/English AABS and other functionalities.

Other features, like QMS and ADAS use table TOPSLANG. This feature does not require QMS or ADAS.

French/English AABS (continued)

Activation/deactivation by the end user

French/English AABS does not require activation or deactivation by the end user.

Billing

NC0297 - AABS Dual Language Capability

This feature does not affect billing.

Station Message Detail Recording

French/English AABS does not affect Station Message Detail Recording.

Datafilling office parameters

French/English AABS does not affect office parameters.

Datafill sequence

The tables that require datafill to use French/English AABS appear in the following table. The tables are listed in the order that the tables are entered.

Datafill requirements for French/English AABS

Table	Purpose of table
TOPSLANG	Allows operator to mark a call with language selections.
VSNOPT	Voice Service Node Options. This table contains the parameters required by the Traffic Operator Position System (TOPS) Automated Alternate Billing Service (AABS) using the voice service mode (VSN).
TOPSPARM	Contains terminating screening parameters.

Datafilling table TOPSLANG

Datafill for French/English AABS for table TOPSLANG appears in the following table. The fields that apply to French/English AABS appear in this table. See the data schema section of this document for a description of the other fields.

French/English AABS (continued)

Enter Table TOPSLANG to allow an operator to mark a call with a language.

Datafilling table TOPSLANG

Field	Subfield or refinement	Entry	Description and action
LANGDIGIT		0 -99	Indicates that the operator keyed in digits 0-99 to identify language.
LANGNAME		Name of language	Indicates name of language
AUTOLANG		Y or N	Enables language capability yes (Y).
	LANGNUM	numeric	Indicates numeric value of automated language. This field is present, if Field AUTOLANG = Y.

Datafill example for table TOPSLANG

Sample datafill for table TOPSLANG appears in the following example:

MAP example for table TOPSLANG

```
LANGDIGIT  LANGNAME  AUTOLANG  LANGNUM
---------------------------------------
   0         SPA        N
  17         ENG        Y         1
  19         FRE        Y         2
```

Datafilling table VSNOPT

Datafill for French/English AABS for table VSNOPT appears in the following table. The fields that apply to French/English AABS appear in this table. See the data schema section of this document for a description of the other fields.

Datafilling table VSNOPT

Parameter name	Description and action
NUM_AUTO_LANGS_REQD_FOR_HANDOFF	Indicates that the new parameter identifies the number of languages an operator must key in before handoff to the VSN. Range is 0-2: • 0: The operator does not have to key in the language. The default AABS language in subfield DEFLANG (front and back) is used if no language entered. Enter DEFLANG value on the same line with 0 for the parameter. The DEFLANG range is 0-14. Table TOPSLANG, field LANGNUM defines value. • 1: Force operator to enter at least front-end language. If back-end not entered, the system defaults to front-end language. • 2: Force operator to enter front and back-end languages. If back-end not entered, the system defaults to front-end language. Language entered must have entry in table TOPSLANG with AUTOLANG=Y.

Datafill example for table VSNOPT

Sample datafill for table VSNOPT appears in the following example:

MAP example for table VSNOPT

```
PARM                                              VALUE
------------------------------------------------------
NUM_AUTO_LANGS_REQD_FOR_HANDOFF                     1
```

Datafilling table TOPSPARM

Datafill for French/English AABS for table TOPSPARM appear in the following table. The fields that apply to French/English AABS appear in this

French/English AABS (end)

table. See the data schema section of this document for a description of the other fields.

Datafilling table TOPSPARM

Parameter name	Description and action
LANG_ERROR_SCREEN_DISPLAY	Displays an error message when the digits or number of digits that the operator keys in are not correct. The numbers are keyed in at a TOPS 04 position. The entered value appears.

Datafill example for table TOPSPARM

Sample datafill for table TOPSPARM appears in the following example:

MAP example for table TOPSPARM

```
PARMNAME                                          PARMVAL
-------------------------------------------------------
LANG_ERROR_SCREEN_DISPLAY                            LANG
```

Tools for verifying translations

French/English AABS does not use translation verification tools.

SERVORD

French/English AABS does not use SERVORD.

Operator handoff to the AABS

Ordering codes

Functional group ordering code: ABS00101

Functionality ordering code: not applicable

Release applicability

BCS31 and later versions

Requirements

Requirements to operate, Operator handoff to the AABS appear in the following list:

- BAS Generic, BAS00001
- Operator Services Basic, OSB00101, and table TOPSFTR parameter TOPS_ON_OFF_SWITCH = Y

Description

The following features provide this functionality:

Feature number	Feature name
NC0013	Operator handoff to Automatic Alternate Billing Service (AABS)
BR20794	Bilingual Bell Canada AABS Enhancements

NC0013 - Operator handoff to AABS

This feature extends the AABS to allow handoff from an operator to a Voice Service Node (VSN) of Station Collect and Third Number billed calls. Billing acceptance from the billed party, is required for the billed calls. When the VSN handles the connection, the VSN attempts to obtain acceptance of the billing. If the VSN obtains acceptance, the VSN directs the digital multiplex system (DMS) to float the call.

BR20794 - Bilingual Bell Canada AABS Enhancements

The two AABS handoff displays on TOPS 04 can now be entered. Required displays support bilingual operations. For example, you can substitute an appropriate French word for the English word, "handoff".

Operator handoff to the AABS (continued)

Operation

The AABS is an optional package for DMS-200 TOPS offices. With AABS, the DMS communicates with a VSN to automate handling of:

- 0+ dialed Station Collect
- Third Number billed
- Calling Card calls.

With an application protocol, the VSN and DMS exchange messages that relate to:

- billing
- network connections
- call dispositions
- maintenance notifications
- audits.

Before this feature, the operator would route 0- calls and 0+ calls that were not automatic, to an operator for manual billing service. With this feature, the operator can handoff Station Collect and Third Number billing calls to the VSN. This transfer is for billing acceptance after the operator enters all the required billing details. The types of calls that now receive automated service are:

- calls from rotary telephones
- Automatic Number Identification (ANI) Failure calls
- 0- calls
- hotel calls that require the room number.

When the operator recognizes that billing acceptance is required, the operator must perform the standard approach. The standard approach is to:

- enter billing data for a Station Collect or Third number billed call
- handoff the call to the ABBS.

When the system obtains billing acceptance, the VSN requests that the DMS float the call. If the VSN has problems with billing acceptance, the VSN can transfer the call to an operator for support. The transfer can occur at specified known points during the call. Refer to GFXA17AA for the known points.

Operator handoff to the AABS (continued)

Enabling the handoff to AABS

The NUM_HANDOFFS_ALLOWED parameter in the VSN Option table (VSNOPT) must be set correctly to activate the handoff to AABS.

The NUM_HANDOFFS_ALLOWED parameter contains an integer value between 0 and 15. When set to zero, handoff to AABS is not enabled. Zero is the default. When set between 1 and 15, handoff to AABS is enabled. The set value determines the maximum number of allowed handoffs for a call.

If NUM_HANDOFFS_ALLOWED is set to 1, only one handoff is allowed. A call handoff to the AABS can occur. If the VSN refers this call to an operator, an additional call handoff to the AABS cannot occur. This handoff allows the OTC to place a cap on the number of times an operator can handoff a subscriber. The operator hands off the subscriber to the automated service. This action forces the operator to obtain billing acceptance manually, when the operator reaches the limit for a call. This action limits the irritation of subscribers that do not understand the system.

The DMS central control (CC) maintains an internal count of the number of times a call handoff occurs. The comparison of an internal count to the NUM_HANDOFFS_ALLOWED parameter occurs. The internal count increases when a call is released from a position and handed off to AABS for billing acceptance.

Marking a call for handoff to AABS

A new AABS handoff key action was added to allow call marking for handoff to AABS. The operator marks the calls that require billing acceptance on Station Collect and Third number billed calls. The system routes the call to the VSN when the call is marked for handoff. The system routes the call after it is released from the position by the Position Release (POS RLS) key.

New TOPS 4 Key

An additional new key is on the TOPS 4 keyboard. The new key is between the Time and Charges (T & C) and Coin (COIN) keys. The new key label is AABS.

New TOPS master position (MP) Key Function

A new key function was added to the FNCTS menu on TOPS MP. Refer to Feature AF2378, TOPS position controller (TPC) AABS 0- handoff Support, for additional information on new TOPS TPC and MP functionality.

Validating the handoff to AABS

Before the AABS handoff key function can start, the state of the call and the billing information require specified conditions. For Station Collect and Bill

Operator handoff to the AABS (continued)

to Third calls, the back number and a forward number must be present. The numbers must be present but must not connect. For these calls, billing must be valid. The back number is the number of the calling party. In the occurrence of Bill to Third calls, a third number must be in the Special Number field. A detailed list of the information to mark a call for handoff appears in the following section.

A standard call can be a 0- ANI successful completion call for which the subscriber wants to bill the forward party. To bill the third party is to make a collect call. The operator charges the call to class Station Collect, and enters the forward number. The operator enters the forward number with the NO CONNECT key option. The operator intends to handoff the call to AABS because the forward party must connect. A database query is sent to validate the billing number. If the query discovers that the forward party accepts all Collect calls, the call can float because handoff is not required. If the database response or operator practice, indicates billing acceptance is required. The operator has an option. This option is to obtain manual acceptance or through handoff to AABS.

If handoff is found, the operator marks the calls to start the AABS handoff key function. The DMS CC performs checks to make sure all required billing information is available. The operator keys POS RLS to handoff the call to AABS. Call release occurs from the operator position.

Collect Auto Outpulsing Implications

When a BVA or line information database (LIDB) query is performed for a class Station Collect call, one of three standard answers results:

- The called party does not accept collect billing.
- The called party automatically accepts the collect billing.
- The called party required to accept billing for collect billing.

When the operator requires billing acceptance, the DMS normally starts automatic outpulsing to the called party. With this feature, automatic outpulsing is not wanted when the operator intends to handoff the call to the AABS. This action occurs because a forward party cannot connect when an attempt occurs to mark the call for handoff.

The VSNOPT parameter COLLECT_ACCEPT_AUTO_OP allows the OTC to indicate that automatic outpulsing must occur. Outpulsing occurs when a database query result indicates that the operator must obtain billing acceptance. Setting the parameter to yes (Y) causes automatic outpulsing in the Station Collect billing acceptance case. If set to no (N), current automatic outpulsing does not occur unless the number of handoffs for this call reach the

maximum limit. Current automatic outpulsing does not occur if the system encounters a resource failure and manual acceptance is required. This specification is made through VSNOPT parameter NUM_HANDOFFS_ALLOWED. Refer to Resource Failures in this module.

Outpulsing occurs when you hit the START key for 0- calls. Outpulsing occurs when the operator enters the forward number before the call is class charged. The subscriber can indicate before or during entry of the forward number that the call is to be billed:

- Station Collect
- No Connect (Rls Cld on TOPS MP).

Parameter COLLECT_ACCEPT_AUTO_OP does not affect calls class charged Person Collect.

Handoff Checks

The following checks are performed when the operator starts the AABS handoff key function:

- A Back Number must be present, and the calling party offhook. For example, the directory number (DN) of the calling party.
- A Forward Number must be present, and not connected. For example, the DN of the called party
- The call must be class charged as one of the following:
  - — Station Collect for Collect handoff calls.
  - — Station Special Calling for Bill to Third handoff calls. A valid Third Number in the Special Number field is available.
- The billed number must pass all DMS billing restriction checks:
  - — A Billing Validation Authority (BVA) or LIDB query must indicate that the billed number is valid.
  - — For a MANUAL check, the DMS format checks must pass for manual billing. The table CCVPARMS indicates the check.
- If the call is a carrier call, the following Equal Access checks are made:
  - — If the call is for transfer to an Interlata Carrier, the XFR IC appears. The handoff check fails.
  - — If the carrier name and number are not known, the IC appears next to the Called Number. The carrier name and number do not appear. The handoff check fails.

Operator handoff to the AABS (continued)

— The carrier for the call is the OTC Carrier. A different carrier number must be entered before the call can be considered for handoff to AABS.

— The carrier cannot complete the call. The carrier name and number flash on the screen.

- If the call is from a hotel that requires No Charge messages, the room number must be present.
- The call must not have a service mark of Directory Assistance (DA) or Intercept (INTC).
- For Station Collect Billed calls:

  — The Forward DN must not be an overseas number. The Forward DN must conform to the North American dialing plan.

  — The call must not be a DA call. The DN of the DA must not be a 555-XXXX or 411 number, or a number that table TOPS marked as DA Service.

- For Bill to Third Number calls:

  — The Third Number must not be an overseas number. The Third Number must conform to the North American dialing plan.

- The call must not be a completed call that was returned to an operator. For example, a call that had an original billing method, the call floated, and returned to an operator for additional support. If the operator wants to change the billing to Third or Station Collect, the operator must obtain billing acceptance manually. This acceptance includes Part Charge Recalls.
- The call must not be marked for Notify. Billing acceptance for Third or Station Collect billed calls must be obtained manually, if required. The operator must call must not be handed off if the subscriber requires notification.
- The called number was not specified through an outgoing trunk (OGT) key.

Other handoff Marking Considerations

Additional limits on the use of the AABS handoff key function are as follows:

- If the AABS handoff Key Function is entered when a query to the BVA or LIDB remains. Remaining is indicated when AMA VFY appears on a TOPS 4 screen, or the Clock Icon on TOPS MP. The key action is ignored.
- If a call is presented to a position with NO AMA displayed as a result of the DMS datafill indication that the call must not be billed. The AABS handoff keying action is ignored if the action attempt occurs.

- If feature G0058, TOPS Special Verify AWT Enhancement is in use, the Called Number must be in the Forward Port. The keying action is ignored if:
  - — Third Number Billing is specified
  - — Third Number is in the Forward Port
- If the AABS handoff key function starts for a Delay call, the key action is ignored.
- If the originating trunk is not a TOPS trunk, the AABS handoff key action is ignored if attempted. Inwards calls that arrive over an ATC or Intertoll trunk is an example of an originating trunk that is not a TOPS trunk.

Handoff Validation Display

If all handoff checks pass when the AABS handoff key function starts, the DMS CC marks off the call for handoff. An indication of this mark appears to the operator. If the checks fail, a handoff is not complete indicator that is not successful appears to the operator. These displays differ by TOPS controller type.

Handoff Status Displays for TOPS 4

Display of the HANDOFF for TOPS 4 indicates successful marking for HANDOFF. Flash of the HANDOFF for TOPS 4 indicates an attempt that is not successful to mark a call for HANDOFF. The two AABS HANDOFF displays are:

- the handoff Verification display
- the handoff Allowed display

Data entry in these tables is possible through table VSNOPT. Earlier, the displays were hard-coded. This action allows the operator to customize the TOPS 4 operator positions, to help provide bilingual support.

Handoff Status Displays for TOPS MP

Successful marking for handoff displays, handoff in the static message area of the TOPS MP screen. An attempt is not successful to mark a call for handoff to display, HANDOFF??, in the same location. Other displays are updated as required to indicate the information that is not correct or missing. This action indicates the action that must occur before the operator can mark the call for handoff. Refer to Feature AF2378 (in TOPS MP Terminal Support, TPC00002) for additional information on MP screen display implementation for the handoff feature.

Operator handoff to the AABS (continued)

Operator Action When handoff Checks Fail

On failing a handoff check, the display outlined above appears on the screen of the operator. Handoff is considered to be toggled OFF. The call was not marked for handoff. If the operator corrects the error and enters the AABS handoff key function again, the operator can mark the call for handoff. A successful handoff is on the display as described above. To key POS RLS releases the call to VSN.

A call is marked for handoff if the handoff completion indicator appears. If POS RLS is entered when the call is marked for handoff, the system attempts the handoff to AABS. If these actions do not occur, POS RLS causes the system to attempt to float, cancel, or transfer the call. The system transfers the call to another operator or to a carrier. Before this feature, these paths were the only paths available to a call, to be released from a position.

Handoff Calls Returned to Operator

After an operator hands off a call to the AABS, the VSN attempts to obtain billing acceptance for the call. If, during this process, the VSN determines that the call must be routed to an operator the call must disconnect. The VSN routes the call to the operator in order that the operator can obtain billing acceptance manually. This disconnection occurs from the VSN. The call is placed in a recall queue. Only at specified, known points in the call can the AABS protocol allow the VSN to refer to an operator. Refer to GFXA17AA. The queue mark of the last handoff call to the AABS, determines the recall queue that the call has placed.

Standard screens appear for Third and Collect billed calls when referred to an operator by VSN. The 0+COL appears in the call origination type area for Collect calls if the called party is not connected. CLDCON appears if the called party is connected. The 0+3RD appears in the call origination type area for Third Number calls if the third party is not connected. 3RDCON appears if the third party is connected. Alter the appropriate parameters in table VSNOPT to override the default displays. Refer to GFXA17AA for additional information on how to refer Third and Collect Billed calls to operator from VSN.

These displays are like completely automated calls. Completely automated calls are not handed off to AABS. These calls were routed to VSN for billing selection and verification. The VSN refers Third and Collect billed calls to an operator. With this feature, two additional displays are present for calls that return to an operator after call handoff to AABS occurs. The operator can distinguish completely automated calls that come in from calls handed off earlier, from completely automated calls that return.

When an earlier handed off call returns to an operator position, one of two indicators appear. If the operator cannot hand this call off again to AABS, a NO handoff ALLOWED indicator appears. The reason for this action appears in a following example. If the operator can hand this call off again, a handoff ALLOWED indicator appears.

TOPS 4 Displays for Handoff Calls Returned to Operator

A steady H at location 0,17 (line, column) indicates the handoff ALLOWED feature on the TOPS 4 screens. The numbers from the upper left hand corner of the screen begin at zero. A flashing H at the same location indicates the NO handoff ALLOWED feature.

TOPS MP Displays for handoff Calls Returned to Operator

A Hand Icon on line 4, columns 39-41, indicates the handoff ALLOWED feature on TOPS MP screens. A No-Hand Icon at the same location indicates the NO HANDOFF ALLOWED feature. Refer to feature AF2378 for additional details on the TOPS MP Hand Icons.

Multiple Handoffs

Parameter NUM_HANDOFFS_ALLOWED in table VSNOPT determines the maximum number of times the operator can handoff calls to the AABS. After the specified number of Handoffs is reached, additional handoffs are not allowed. The operator must complete the call manually.

A parameter check occurs each time a call returns to an operator. If the call reaches the call limit, NO HANDOFF ALLOWED appears. The system ignores the AABS handoff key.

The DMS can refer the call to an operator when resources are not available in the VSN. If the DMS refers the call to an operator the call is identified as not qualified for Handoff. A Resources not available message from the VSN appears. The subscriber that the operator hands off to the AABS, expects an automated interaction to take place. Instead the subscriber call returns to an operator, after a wait in queue. To minimize problems for the subscriber, these calls are presented with the NO HANDOFF ALLOWED display. This display indicates that the system ignores additional handoff attempts by the operator.

When the HANDOFF ALLOWED indicator appears, the operator can hand off the call again. If the billed party is attached when a call returns to an operator, the party must be released. A Handoff cannot occur until the party is released. The release must occur if a different billed party is designated before the subsequent Handoff. This action occurs so that this billed party does not receive a second automated billing acceptance attempt for the same call.

Operator handoff to the AABS (continued)

Other than these differences, the Man-Machine Interface (MMI) for Handoff calls that return to an operator is identical for completely automated AABS Third and Collect calls. Refer to GFXA17AA for a description.

FADS and Calls Returned to an Operator

Handoff calls that return to an operator are considered Recalls for Force Administration Data System (FADS) purposes. These calls are Recalls because an Initial Position Seizure (IPS) was pegged for the call when the operator first handed off the call.

Resource Failures

Handoff is not possible if not enough AABS resources are available to handle a correctly marked call. The POS RLS key is ignored. A call remains in position.

Two types of resource failures can occur:

1. The DMS cannot find an available voice link to a VSN.
2. The data links between the DMS and the VSN are out-of-service (OOS).

To indicate the occurrence of a failure, one of the following appears on the operator screen:

- On TOPS 4, the NO handoff ALLOWED indicator, the flashing H, appears to the operator.
- On TOPS MP, NO handoff appears on line 1, column 50 of the MP screen.

Translations table flow

Package Operator handoff to the AABS does not have table flow.

Limits

The following limits apply to Operator handoff to the AABS.

NC0013 - Operator handoff to AABS

Refer to the following list:

- This feature REQUIRES the AABS, ABS00101, package.
- Parameter NUM_HANDOFFS_ALLOWED in table VSNOPT must be set to a non-zero value. This set must occur after all VSNs on a switch are upgraded to provide handoff functionality.
- In an Operator Centralization (OC) environment, parameter NUM_HANDOFFS_ALLOWED in table VSNOPT must be set to a non-zero value. The NUM_HANDOFFS_ALLOWED must be set to a non-zero value in all of the switches in the OC configuration. These

switches have one or more VSNs attached after all of the VSNs are upgraded to provide the handoff functionality. This action prevents the event where an operator handles several calls in the host. These calls are qualified for handoff. Other calls are not qualified for handoff. For example, several remote switches activated the parameter when other switches did not activate the parameter.

- Calls with a service mark of Directory Assistance (DA) or Intercept (INTC) may not be handed off to AABS.

BR20794 Bell Canada Enhancements

Refer to the following list:

- The changes made do not affect Traffic Operator Position System Multipurpose (TOPS MP) positions. TOPS MP positions have special icons for the HANDOFF displays.
- The Handoff Validation display can be datafilled to be a string of up to seven characters (seven characters is the maximum length).
- The Handoff Allowed display can only be datafilled to be a single character. You should be careful not to datafill this display with a 'B' if Branding is available. Branding is marked with a 'B' in the same TOPS 4 terminal location as the Handoff Allowed display.

Interactions

The following paragraphs describe the interactions between Operator handoff to the AABS and other functionalities.

TOPS AMA on Operator Sequence Calls

Marking a call for Handoff in and of itself does not constitute a billable action for GEN AMA purposes. For example, if the GEN AMA key function is invoked successfully and the call is then marked for Handoff, and before any other key function is entered a second GEN AMA is attempted, the second GEN AMA attempt will be denied. See feature G0056, "TOPS AMA on Operator Sequence Calls" for more information on the GEN AMA key function.

Time and Charges

Calls may be marked for Time and Charges quotation before being handed off to AABS. Time and Charges quotations are provided at the end of a call in the same manner as for calls manually floated by an operator, by the Automatic Coin Toll Service (ACTS) or by an operator. Charges quoted are the same as those for calls for which billing acceptance is manually obtained by an operator.

Operator handoff to the AABS (continued)

Activation/deactivation by the end user

Operator handoff to the AABS requires no activation or deactivation by the end user.

Billing

Operator handoff to the AABS does not affect billing.

Station Message Detail Recording

Operator handoff to the AABS does not affect Station Message Detail Recording.

Datafilling office parameters

Operator handoff to the AABS does not affect office parameters.

Datafill sequence

Tables that require datafill to implement this feature appear in the following table. The tables appear in the correct entry order.

Datafill requirements for Automated Room and Authorization Number

Table	Purpose of table
VSNOPT	Voice service node options contains TOPS office wide parameters.

Datafilling table VSNOPT

The datafill for for table VSNOPT appears in the following table. Only the parameters that apply directly appear. Refer to the Data Schema section for a description of the other fields.

Datafilling table VSNOPT

Parameter	Explanation and action
NUM_HANDOFFS_ALLOWED	The range is 0-15. Enter 0 if the handoff feature is inactive and calls cannot be marked for handoff at the operator position. Otherwise, the feature is active. Then, enter the maximum number of calls that can be handed off to VSN for collect or third number biling.
COLLECT _ACCEPT_AUTO_OP	Enter Y collect accept automatic outpulsing of a forwarded number. Otherwise, enter N.

Datafill example for table VSNOPT

Sample datafill for table VSNOPT appears in the following example.

Operator handoff to the AABS (end)

MAP example for table VSNOPT

```
VSNPARM                          VALUE
------------------------------------------------------
NUM_HANDOFF_ALLOWED              0
COLLECT_ACCEPT_AUTO_OP           Y
```

Tools for verifying translations

Automated Room and Authorization Number does not use tools for verifying translations.

SERVORD

Automated Room and Authorization Number does not use SERVORD.

TOPS Authorization Code Billing

Order codes

Operating group order code: ABS00101

Functionality order code: Anot applicable

Release applicability

TOPS05 and later versions

The TOPS Authorization Code Billing was introduced in TOPS05.

Requirements

The TOPS Authorization Code Billing has the following requirements:

- BAS Generic, BAS00003
- Operator Services Basic, OSB00101, and table TOPSFTR parameter TOPS_ON_OFF_SWITCH = Y
- Table TOPSFTR parameter AUTHORIZATION_CODE_BILLING = Y

Description

The following features provide the functionality:

Features in this functionality

Feature number	Feature name
AN1579	TOPS Authorization Code
AF6340	TOPS Authorization Code Enhancements (NA005)

The functionality requires a subscriber to enter an authorization code to place a toll call. The functionality is used for the following conditions:

- provides the same functionality as Traffic Operator Position System (TOPS) Account Code Billing and is easier to use. The subscriber can be billed with subtotals.
- allows different customers in a dormitory or house to use the same telephone and receive personal billing.
- allows a lawyer to separate phone billing for different clients.

The IntraLATA 1+ calls on TOPS trunks can receive authorization code screening service. The system can apply this service if you enter the calling number and the system signals the call with SPECIAL ANI ID digits. The system prompts the subscriber for an authorization code. The code validates

TOPS Authorization Code Billing (continued)

the authorization code against datafill. The system records the authorization code in Automatic Message Accounting (AMA).

In NA006, feature AF6340 added table AUTHSGRP. This table allows assignment of a maximum of 64 000 non-consecutive different authcodes for a DN group.

Operation

Background

Before this functionality, TOPS processed three types of 1+ calls signalled with SPECIAL ANI ID digits over an incoming TOPS trunk. The system defines the ANI ID digits as SPECIAL in a table that correspond to the signalling type that the TOPS trunk group employs. An example is table BELLCAT that the system uses for BELL signalling.

The three original types of calls the system supports signaled in this method are:

- COIN - indicated by datafill in table SPLDNID or tables DNSCRN, TOPSDB, and TDBCLASS. This datafill marks this station as a COIN station. Coded start digits in the incoming signaling can identify COIN stations.
- HOTEL- indicated by datafill in table SPLDNID or tables DNSCRN, TOPSDB, and TDBCLASS. This datafill marks this station as a HOTEL station.
- ARAN (Automatic Room and Authorization Number) -indicated by datafill in tables DNSCRN, TOPSDB, and TDBCLASS. This datafill marks this call for ARAN service. The ARAN Authorization Number is not related to the authorization number this feature collects.

Description

Eligibility for screening

With this functionality, 1+ intraLATA calls with SPECIAL ANI ID digits on TOPS trunks are eligible for authorization code screening service. The system can apply this service only if datafill or signaling does not mark the call as COIN, HOTEL or ARAN. A call marked RSTRCTD can continue to receive this service. The restricted billing class applies only to other Operator Services calls (such as 0+). A call with a NOSPLDNID mark in table TDBCLASS can still be eligible for this service.

When a 1+ call comes in on a TOPS trunk signalled with SPECIAL ANI ID digits, the system checks the call against table SPLDNID. The system checks

the call against tables DNSCRN, TOPSDB, and TDBLCASS. This check occurs on a TOPS trunk in the North American Numbering Plan only. If the conditions are not met and the call is intraLATA (toll or local), the system checks table DNSCRN for a non-zero index into new table AUTHGRP. If the system finds a non-zero index, the system gives authorization code screening service.

Table DNSCRN is modified to index into the new AUTHGRP table. Each entry in AUTHGRP represents a directory number (DN) group. Each AUTHGRP entry indicates the length, in digits, of the authorization codes for the group. Entries indicate if codes require validation. Entries indicate the correct code ranges for validation.

Subscriber prompting

If a call qualifies for screening, the system prompts the subscriber for an authorization code. The calling number can be part of an authorization code DN group marked for validation in table AUTHGRP. If this condition is present, the system checks the code against entered ranges in table AUTHGRP if field FORMAT = RANGE. If field FORMAT = DISTINCT in table AUTHGRP, the system checks the code in table AUTHSGRP. Table AUTHSGRP has a maximum of 64 000 non-consecutive distinct authcodes entered. If the system does not perform validation, no checks are made. A minimum number of digits, as prescribed in table AUTHGRP, must be entered in either table AUTHGRP or AUTHSGRP. If validation fails or the subscriber enters too few digits, the system issues a second prompt. The subscriber can try again. If the second attempt also fails, the system routes the call to RODR treatment. Operator backup is not available for this service.

The system provides the same prompt used for Mechanized Calling Card Service (MCCS) to subscribers that receive authorization code screening service. The system provides this prompt for both first and second attempts. This prompt occurs where TONE is the prescribed Operating Station Treatment (OST) as entered in MCCSOST. The MCCSTOPS 17 entry in table DRMUSERS specifies this prompt. This prompt is a single bong. If tuple MCCSTOPS 17 in table DRMUSERS indicates MCCS is present, no datafill is required. Refer to the datafill procedure section for more information if MCCS is not present.

Completion

The system collects the authorization code and the optional validation passes. The system routes the call to the destination of the call. Standard translations route the call. If outgoing signaling includes ANI spill, table EAANIID governs the outgoing signaled ANI ID digits. For authorization code screening calls, the system uses the ANISUCC index for this table. Entries in field

TOPS Authorization Code Billing (continued)

EAANI of table TDBCLASS can supercede the ANISUCC index. At the end of the call, the system produces the AMA record.

Optionality

Use the Software Optionality Control (SOC) utility to turn this functionality to ON or IDLE (off). If the SOC for this functionality is in the IDLE state, the system does not give calls authorization code screening service. This condition does not depend on the datafill indication. The system provides authorization code screening service when the SOC is in the ON state. The SOC code for this functionality is ABS00101. Refer to the Manual for SOC Users, NTP 297-8991-901, for details on how to use this tool.

Operational measurements

Two registers are added to the TOPSMISC OM group. The registers are AUTHATT and AUTHFAIL. The registers count the number of calls the system supplies authorization code screening service. These registers count the number of calls the system routes to treatment because of collection failure.

Translations table flow

Descriptions of the TOPS Authorization Code Billing translations tables appear in the following list:

- Table SPLDNID indicates coin or hotel call
- Table DNSCRN indexes into tables AUTHGRP and TOPSDB
- Table TOPSDB indexes into table TDBCLASS
- Table TDBCLASS indicates coin, hotel, or ARAN
- Table AUTHGRP defines authorization codes for ranges of codes
- Table AUTHSGRP defines authorization codes for different codes
- Table CLLI - add prompt tone announcement for table DRMUSERS
- Table ANNS - add prompt tone announcement for table DRMUSERS
- Table ANNMEMS - add prompt tone announcement for table DRMUSERS
- Table DRMUSERS - add prompt tone announcement
- Table MCCSOST - select prompt tone for TOPS trunk.
- Table RECEIVER - define receivers for MCCS announcement tone.

The TOPS Authorization Code Billing translation process appears in the following flowchart.

TOPS Authorization Code Billing (continued)

Table flow for TOPS Authorization Code Billing

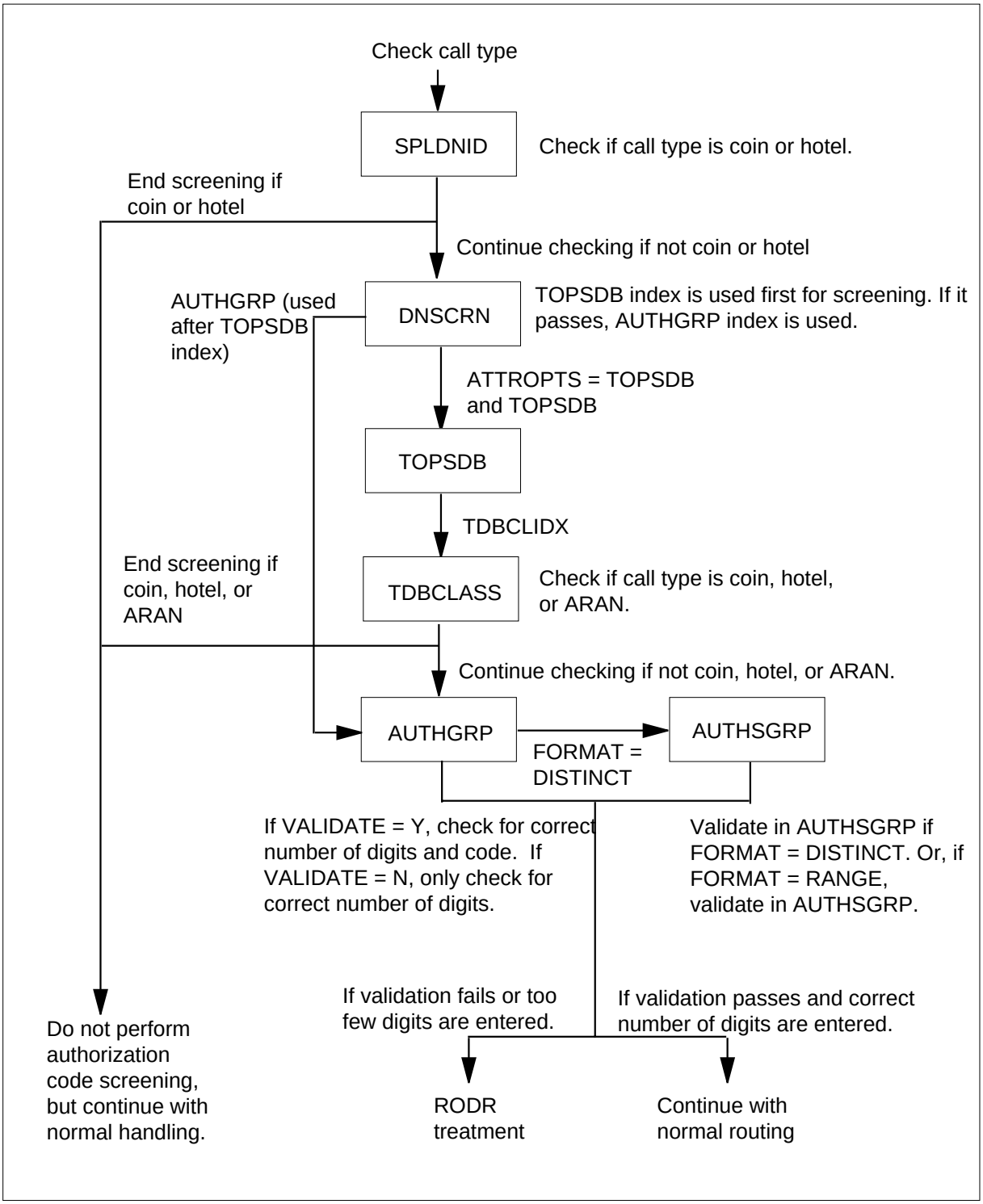

TOPS Authorization Code Billing (continued)

Table flow for TOPS Authorization Code Billing(continued)

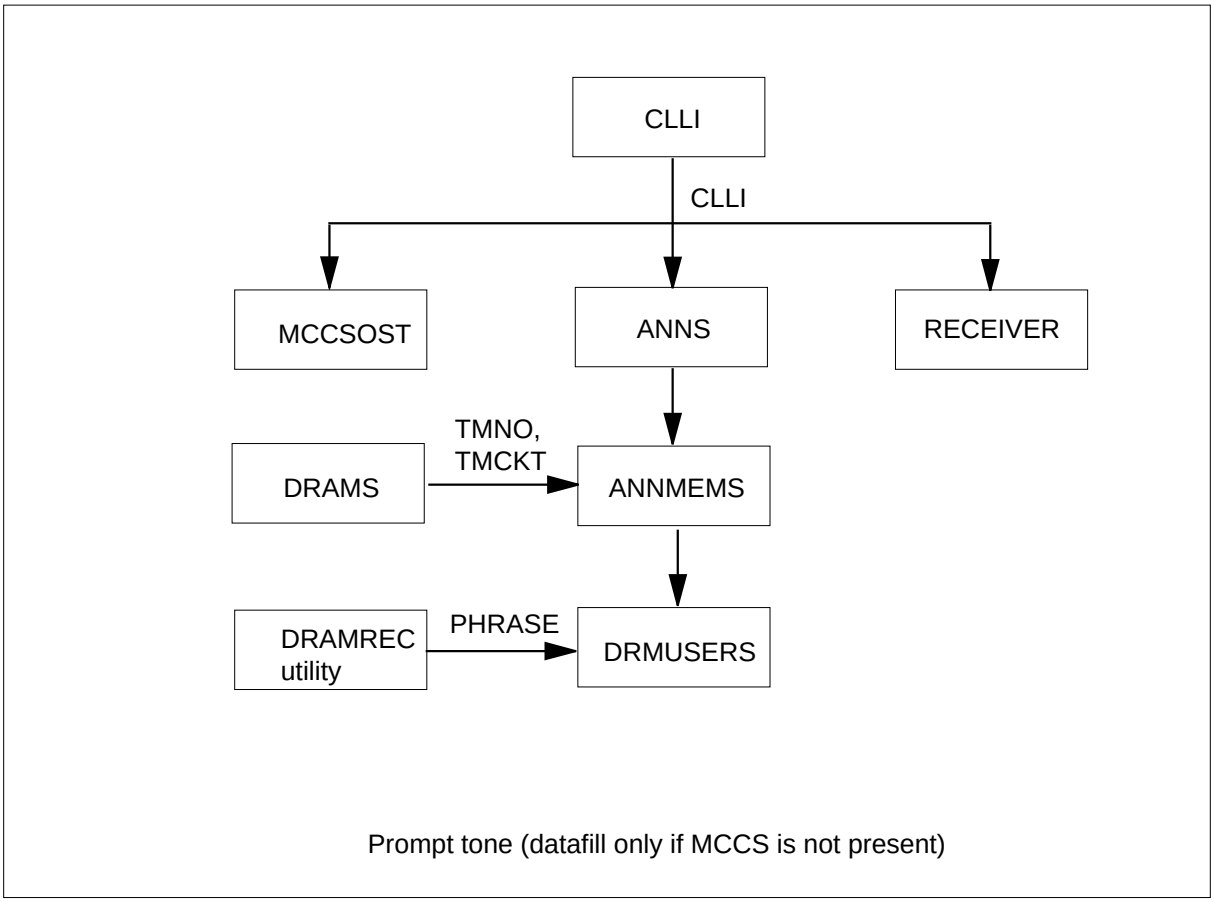

The datafill content used in the flowchart appears in the following table.

Datafill example for TOPS Authorization Code Billing

Datafill table	Example data
SPLDNID	6193225572 RSTRCTD 0
DNSCRN	6193229112 TOPSDB (3 12)$
DNSCRN	6193229114 TOPSDB (3 14)$
TOPSDB	3 5 1 7 8
TDBCLASS	5 NOSLDNID N N
AUTHGRP	12 Y 4 RANGE (4000 7999) (2200 2299) (4800 4850)$
AUTHGRP	14 Y 3 DISTINCT

TOPS Authorization Code Billing (continued)

Datafill example for TOPS Authorization Code Billing

Datafill table	Example data
AUTHSGRP	14 111
CLLI	MCCSDRAM 20 55 0 MCCS, ANNOUNCEMENTS
MCCSOST	EVCL791INSP SERV TONE SERV TONE
DRAMS	5 7 MTM 0 0 1X75BA CTLR DRAM0
ANNS	MCCSDRAM MCCS 25 1 0 1
ANNMEMS	MCCSDRAM 0 DRAM DRA 0 MTM 0 0
DRMUSERS	MCCSDRAMS 10 MCCS17ENG RAOENG $

Limits

The following limits apply to TOPS Authorization Code Billing:

Subscribers in DN groups in AUTHGRP not marked for authorization code validation can enter codes between two and four digits in length. Subscribers in DN groups with validation can enter codes between two and eight digits in length.

The method of collection of the authorization code is dual-tone multifrequency (DTMF). Subscribers cannot use this service from a dial pulse telephone.

The system does not provide this service on interLATA, Open Numbering Plan or toll free calls.

The system does not provide branding service on authorization code screened calls.

A characteristic of MCCS/ACCS calls applies to Authorization Code calls. The subscriber can enter a calling card number or an Authorization Code entry two or more digits too long. When this error occurs, the second digit beyond the correct maximum becomes the first digit of the next retry. This automatic retry occurs only if the retry is justified. A justified retry is usually apparent by the audible reprompt with the first digit beyond the maximum. When the subscriber enters the second digit beyond the maximum, playback of the reprompt ceases. The system interprets the first digit of the retry. If the subscriber enters the second digit too quickly, the reprompt can stop before the subscriber hears the tone. If the subscriber does not hear the reprompt, the subscriber can believe that a retry did not occur.

TOPS Authorization Code Billing (continued)

A DN group can use a maximum of ten authorization code ranges or a maximum of 64 000 different authorization codes.

A warning message can appear when the system deletes the last AUTHCODE for a DN group from table AUTHSGRP. This message appears if a table DNSCRN reference is present. The system allows this operation. After the subscriber enters an authorization code, the system routes the call to treatment REORDER. The system routes the call to treatment REORDER because the entered AUTHCODEs are not present to validate against.

Interactions

Descriptions of the interactions between TOPS Authorization Code Billing and other functionalities appear in the following paragraphs.

The system does not provide authorization code screening service for local and 1+ intraLATA toll calls marked COIN, HOTEL or ARAN in TOPS datafill or by signalling. These calls receive the appropriate TOPS service associated with the marking. 1+ interLATA, toll-free, 0- and 0+ calls are not affected by this functionality.

Activation/deactivation by the end user

If a call qualifies for screening, the system prompts the subscriber for an authorization code. If validation fails or the subscriber enters too few digits, the system issues a second prompt. The subscriber can try again. If the second attempt fails, the system routes the call to treatment.

Billing

The AMA records the calls that receive authorization code screening service with the use of structure code 1 and call code 6. If the system correctly collects an authorization code, the AMA records the code in an appended module code. Module code 301 records authorization codes that the system does not validate. This module code records Account Code Billing calls. Module code 102 records validated authorization codes. In a collection failure occurrence, the AMA does not append either module code. Module code 301 can contain only four digits. Codes that the system does not validate are two and four digits in length only. Validated codes can be between two and eight digits in length.

Note: Module code 301 pads all entries with leading zeros. The leading zeros can cause the system to not differentiate between a two digit authorization code of 43 and a three digit authorization code of 043. This condition occurs if module code 301 is used for authorization code screening or Account Code Billing. Northen Telecom recommends that authorization codes with significant leading zeros not be used.

TOPS Authorization Code Billing (continued)

Station Message Detail Recording

The TOPS Authorization Code Billing does not affect Station Message Detail Recording.

Datafilling office parameters

The TOPS Authorization Code Billing does not affect office parameters.

Datafill sequence

The tables that require datafill to implement TOPS Authorization Code Billing appear in the following table. The tables appear in the correct entry order.

Datafill requirements for TOPS Authorization Code Billing

Table	Purpose of table
AUTHGRP	Authorization code group defines ranges of subscriber authorization codes for DN groups.
AUTHSGRP	Authorization codes group defines different subscriber authorization codes for DN groups.
DNSCRN	Directory number screening indexes into table AUTHGRP.
Enter data into the following tables for the subscriber prompt tone only if tuple MCCSTOPS 17 in table DRMUSERS is not present.	
CLLI	Common language location identifier. Add new announcement name
MCCSOST	Mechanized calling card service originating station treatment
RECEIVER	Receiver defines the receivers for MCCS tone
DRAMS	Defines physical locations of cards on DRAM shelf
ANNS	Announcements. Define new announcement software information
ANNMEM	Announcement members. Define new announcement hardware location
CI increment DRAMREC	DRAM recording facility. Command interpreter (CI) increment DRAMREC is not a table.
DRMUSERS	Digital recorded announcement machine users. Add new announcements

Datafilling table AUTHGRP

Authorization code group (AUTHGRP) allows a group of directory numbers to gain authorization code screening service. A tuple in this table represents a directory number group. Each tuple contains the indication Y or N. This letter indicates if validation of the authorization codes is possible. The indication

TOPS Authorization Code Billing (continued)

supplies the size of the authorization codes, in digits, for the group. If validation is possible, the tuple provides a list of correct code ranges for the group.

Field FORMAT specifies if you enter AUTHCODE ranges in AUTHGRP or if you enter different AUTHCODES in table AUTHSGRP. If the FORMAT fields indicates DISTINCT, you enter each AUTHCODES in table AUTHSGRP.

A default tuple, key 0, is present. Do not alter or delete this default key. This is a nil tuple. References to this tuple from table DNSCRN indicate that the DN is not qualified for authorization code screening service.

You must enter data into table AUTHGRP before table DNSCRN.

Datafilling table AUTHGRP

Field	Subfield or refinement	Entry	Explanation and action
AUTHKEY		refer to subfield IDX	Authorization key. This field is the key into the table. This field consists of subfield IDX. The system indexes this key field from field AUTHGRP in table DNSCRN when field ATTROPTS = TOPSDB.
	IDX	0 to 32766	Index into this table.
AUTHVALA		refer to subfield VALIDATE	Authorization validation area. This field consists of subfield VALIDATE.
	VALIDATE	Y or N	Validate. Indicates if authorization codes for this directory number group require validation against a list of code ranges in subfield AUTH_CODES. If the code requires validation, enter Y. Enter refinements CODESIZE and AUTH_CODES. If the code does not require validation enter N. An N entry does not require additional datafill.
	CODESIZE	2 to 8	Code size. If VALIDATE = Y, enter data into this field. Enter the number of digits for the authorization codes for this group.
	AUTHFORM	refer to subfield FORMAT	Authorization format. This field consists of subfield FORMAT.

TOPS Authorization Code Billing (continued)

Datafilling table AUTHGRP

Field	Subfield or refinement	Entry	Explanation and action
	FORMAT	RANGE or DISTINCT	Format. This field indicates where you enter the authorization codes: • RANGE - Enter codes as ranges in field AUTH_CODE of this table (AUTHGRP). • DISTINCT - Enter codes as non-consecutive values in table AUTHSGRP. If FORMAT = RANGE, enter data into subfield AUTH_CODES. If FORMAT = DISTINCT,further datafill is not a requirement.
	AUTH_CODES	refer to subfields MIN and MAX.	Authorization codes. This subfield contains entries only if VALIDATE = Y. Enter a maximum of ten pairs of MIN and MAX values of authorization code ranges for validation. The MIN and MAX range from 0 to n 9s where n is the value of the CODESIZE field. For example, if CODESIZE = 5, then MIN and MAX may be any value between 0 and 99 999. Values entered with less than n digits are considered to have prefixed zeros. For example, if n is 5 and you enter 478, the system considers the value to be 00478. The MAX value of a pair must be equal to or greater that the MIN value. Pairs must not overlap another code pair. Pairs must progress from lower values to higher values. The system allows overlapping pairs, but Northern Telecom does not recommend this action.
	MIN	0 to n 9s (where n = CODESIZE)	Minimum. Enter the authorization code range minimum value. Refer to comments under subfield AUTH_CODES.
	MAX	0 to n 9s (where n = CODESIZE)	Maximum. Enter the authorization code range maximum value. Refer to comments under subfield AUTH_CODES.

Datafill example for table AUTHGRP

Sample datafill for table AUTHGRP appears in the following example.

TOPS Authorization Code Billing (continued)

MAP example for table AUTHGRP

```
AUTHKEY  AUTHVALA
-------------------------------------------------------
 0  N
14  Y  4  RANGE  (400 799)  (2200 2299) (6000 6521)$
22  Y  3  DISTINCT
27  Y  3  RANGE (100 200) (300 400) (500 500) (600 601)$
32  Y  2  DISTINCT
33  Y  8  DISTINCT
```

In tuple 14, the system considers codes in the range (400 799) to be (0400 0799).

Tuple 0 is a default entry. Do not alter or delete tuple 0. Tuple 0 is nil. References to this tuple from table DNSCRN indicate that the directory number is not qualified for authorization code screening service.

Error messages for table AUTHGRP

Error messages that apply to table AUTHGRP appear in the following table.

Error messages for table AUTHGRP

Error message	Explanation and action
`Table DNSCRN references Tuple 14.`	You must enter data in table AUTHGRP before the index of the table operates in table DNSCRN. If DNSCRN references a tuple in AUTHGRP and you attempt a delete operation in AUTHGRP, an error message appears. In this occurrence, the system denies the operation.
`TUPLE 0 CANNOT BE DELETED OR CHANGED`	You attempted to delete or change the default tuple for table AUTHGRP.
`IF VALIDATE IS Y YOU MUST ENTER AUTH CODES`	Field VALIDATE is Y but you entered invalid ranges for field AUTH_CODES. Change VALIDATE from Y to N. Enter correct ranges for AUTH_CODES.
`AUTHORIZATION CODE SIZE MUST BE 2, 3, OR 4.`	You entered an invalid value for field CODESIZE. The correct range is two to four.

TOPS Authorization Code Billing (continued)

Error messages for table AUTHGRP

Error message	Explanation and action
`WARNING! DUPLICATE TUPLE. THIS DATA IS PRESENT IN TUPLE n`	The data entered appears in another tuple. If a tuple is associated with tuples in table AUTHSGRP the system does not allow a delete operation on the tuple in AUTHGRP. If a tuple is associated with a tuple in table DNSCRN, the same condition applies. The system denies the operation and an error message appears. The system does not permit this operation until you delete all of the associated tuples in AUTHSGRP and DNSCRN. The system does not permit you to perform change operation on the FORMAT field from DISTINCT to RANGE. The system does not permit this action until you delete all associated tuples in table AUTHSGRP. If you attempt a change operation on the FORMAT field from RANGE to DISTINCT, a warning message appears. This warning indicates that the system will lose all of the authcode range information on completion of the change. The system does not allow a change operation on the CODESIZE field. This field has the tuple associated with tuples in table AUTHSGRP. The system denies the operation if the new CODESIZE is less than the previous CODESIZE. The system does not allow a change operation on the VALIDATE field. This field has associated tuples entered in table AUTHSGRP.

TOPS Authorization Code Billing (continued)

Datafilling table AUTHSGRP

Table authorization codes group (AUTHSGRP) contains the different authorization codes. These authorization codes are associated with a DN group when the FORMAT field in table AUTHGRP has the DISTINCT option. In table AUGHSGRP, field AUTHINFO is a multi-part key that contains the AUTHIDX field and the AUTHCODE field. Each tuple is a distinct authorization code associated with a DN group. The AUTHIDX field associates the authorization code with a DN group. The AUTHCODE field specifies the distinct authorization code. The distinct authorization code is the length specified in the YSIZE field in table AUTHGRP. The AUTHSGRP table can contain tuples only for the DN group specified as DISTINCT in table AUTHGRP.

You must enter data into table AUTHGRP before table AUTHSGRP.

Datafilling table AUTHSGRP

Field	Subfield or refinement	Entry	Explanation and action
AUTHINFO		refer to subfields	Authorization information. This information is the key into the table. This information consists of subfields AUTHIDX and AUTHCODE. Use this table when table AUTHGRP field FORMAT = DISTINCT only.
	AUTHIDX	0 to 32766	Authorization index. This field associates a different authorization code with a DN group. This field directly maps to the IDX field in table AUTHGRP.
	AUTHCODE	digits (number of digits is in field CODESIZE of table AUTHGRP)	Authorization code. This field contains the distinct authorization code associated with a DN group. The CODESIZE field in table AUTHGRP specifies the number of digits in this AUTHCODE field. If the number of digits in this field is less than field CODESIZE specifies, the system prefixes this entry with zeros.

Datafill example for table AUTHGRP

Sample datafill for table AUTHGRP appears in the following example.

MAP example for table AUTHGRP

```
AUTHINFO
-----------------------------------------------------
22  111
22  345
22  783
32  1
32  45
33  345912
33  23910384
33  49013895
33  90382819
```

Error messages for table AUTHSGRP

Error messages that apply to table AUTHSGRP appear in the following table.

Error messages for table AUTHSGRP

Error message	Explanation and action
	The system does not allow you to attempt an add operation on table AUTHSGRP without an associated DN group in table AUTHGRP. This error message appears. The system does not allow you enter the associated DN group in table AUTHGRP with field FORMAT = RANGE to indicate ranges of authorization codes. This error message appears. A warning message appears when the following two conditions are present: • a delete operation in progress on the last authorization code for a DN group • an associated tuple in DNSCRN The system allows the operation. The system routes the subscriber to REORDER treatment. The system routes the subscriber after the subscriber enters an authorization code. This action occurs because there are no authorization codes entered to validate against.

TOPS Authorization Code Billing (continued)

Datafilling table DNSCRN

Table DNSCRN allows the assignment of attributes to individual directory numbers or groups of directory numbers. The TOPSDB attribute of DNSCRN is enhanced to add an index to the new AUTHGRP table. The current index to table TOPSDB is not affected.

You must enter data into table AUTHGRP before table DNSCRN.

The system restores tuples with TOPSDB attributes dumped from a load version before TOPS05. The system restores the tuples with the same TOPSDB index value and a default AUTHGRP index value of zero. This zero value is a reference to a nil tuple in table AUTHGRP. The zero value indicates that the directory number is not qualified for authorization code screening service.

Datafill for TOPS Authorization Code Billing for table DNSCRN appears in the following table. The fields that apply to TOPS Authorization Code Billing appear in this table. See the data schema section of this document for a description of the other fields.

Datafilling table DNSCRN

Field	Subfield or refinement	Entry	Explanation and action
ATTROPTS		TOPSDB	Screening attribute options. The addition of new subfield AUTHGRP changes this field. This addition appears in the following example.
	TOPSDB	0 to 32766	TOPS data base. This subfield is not changed.
	AUTHGRP	0 to 32766	Authorization group. The authorization group is a new subfield that indexes into new table AUTHGRP.

Datafill example for table DNSCRN

Sample datafill for table DNSCRN appears in the following example.

MAP example for table DNSCRN

```
DN              ATTROPTS
------------------------------------------------------
6193225572      TOPSDB (14 0) $
6193227440      TOPSDB (0 3) $
6193229112      TOPSDB (3 12) $
```

As an example description of the datafill, the last tuple contains indices 3 and 12 into tables TOPSDB and AUTHGRP. The table TOPSDB index first pre-screens by accessing table TOPSDB for an index into table TDBCLASS. If the entry in table TDBCLASS is NOSPLDNID, then the table DNSCRN index into table AUTHGRP authorizes code screening.

Error messages for table DNSCRN

Error messages that apply to table DNSCRN appear in the following table.

Error messages for table DNSCRN

Error message	Explanation and action
`Tuple 26 is not datafilled in table AUTHGRP.`	You must enter data into table AUTHGRP before the index of the table operates in table DNSCRN. An index value referenced in DNSCRN during an add or change operation that does not exist in AUTHGRP cause an error. An error message appears. The system does not allow the operation.

Datafilling table CLLI

Datafill for TOPS Authorization Code Billing for table CLLI appears in the following table. The fields that apply to TOPS Authorization Code Billing appear in this table. See the Data Schema section of this manual for a description of the other fields.

Datafilling table CLLI

Field	Subfield or refinement	Entry	Explanation and action
CLLI			Common language location identifier. Add the following as required: • TOPS trunks • MCCS tone announcement • DRAMS • MCCS receiver tone

Datafill example for table CLLI

Sample datafill for table CLLI appears in the following example.

TOPS Authorization Code Billing (continued)

MAP example for table CLLI

```
CLLI       ADNUM    TRKGRSIZ                        ADMININF
_____________________________________________________________
DRAM0      1       12       DIGITAL, RECORDER,ANNOUNCER,0
RCVRMF     4        50       MF, RECEIVER
MCCSDRAM   5        60       MCCS, ANNOUNCEMENT
```

Datafilling table MCCSOST

Datafill for TOPS Authorization Code Billing for table MCCSOST appears in the following table. The fields that apply to TOPS Authorization Code Billing appear in this table. See the data schema section of this document for a description of the other fields.

Datafilling table MCCSOST

Field	Subfield or refinement	Entry	Explanation and action
OST		TONE	Public originating station treatment. Enter tone.
OST		TONE	Private originating station treatment. Enter tone.

Datafill example for table MCCSOST

Sample datafill for table MCCSOST appears in the following example.

MAP example for table MCCSOST

```
CLLI          PUBLIC        PRIVATE
-------------------------------------------------------
EVCL791INSP   SERV  TONE    SERV   TONE
```

Datafilling table RECEIVER

Datafill for TOPS Authorization Code Billing for table RECEIVER appears in the following table. The fields that apply directly to TOPS Authorization Code

Billing appear in this table. Refer to the data schema section of this document for a description of the other fields,.

Datafilling table RECEIVER

Field	Subfield or refinement	Entry	Explanation and action
	CLLI	RCVRMF	Common language location identifier. Enter RCVRMF for multifrequency receiver circuit.

Datafill example for table RECEIVER

Sample datafill for table RECEIVER appears in the following example.

MAP example for table RECEIVER

```
RCVKEY   RCVRTYPE   TMTYPE   TMNO   TMCKTNO   CARCODE
-----------------------------------------------------
RCVRMF   0          D        MTM    6         0
```

Datafilling table DRAMS

Datafill for TOPS Authorization Code Billing for table DRAMS appears in the following table. The fields that apply to TOPS Authorization Code Billing appear in this table. See the data schema section of this manual for a description of the other fields.

Datafilling table DRAMS

Field	Subfield or refinement	Entry	Explanation and action
			Digital Recorded Announcement Machine. Define DRAM card locations on DRAM shelf.

Datafill example for table DRAMS

Sample datafill for table DRAMS appears in the following example.

MAP example for table DRAMS

```
 DRAMKEY TMTYPE TMNO TMCKT CARDCODE CARDINFO
_____________________________________________
   0 0    MTM      0    0    1X75BA  CTLR  DRAM0
   0 1    MTM      0    2    1X76CA  PROM 0 1
```

TOPS Authorization Code Billing (continued)

Datafilling table ANNS

Datafill for TOPS Authorization Code Billing for table ANNS appears in the following table. The fields that apply to TOPS Authorization Code Billing appear in this table. See the data schema section of this manual for a description of the other fields.

Datafilling table ANNS

Field	Subfield or refinement	Entry	Explanation and action
CLLI			Common language location identifier. Add tone announcement, if not present.

Datafill example for table ANNS

Sample datafill for table ANNS appears in the following example.

MAP example for table ANNS

```
CLLI       ANTYPE    TRAFSNO    MAXCONN    CYTIME    MAXCYC
_____________________________________________________________
MCCSDRAM   MCCS       25          1          0        1
```

Datafilling table ANNMEMS

Datafill for TOPS Authorization Code Billing for table ANNMEM appears in the following table. The fields that apply to TOPS Authorization Code Billing appear in this table. See the data schema section of this manual for a description of the other fields.

Datafilling table ANNMEM

Field	Subfield or refinement	Entry	Explanation and action
ANNMEMS			Announcement members. Add tone announcement, if not present.

Datafill example for table ANNMEMS

Sample datafill for table ANNMEM appears in the following example.

MAP example for table ANNMEMS

```
ANNMEM       HDWTYPE    CARD    TRCKLIST
_____________________________________________________
MCCSDRAM     0          DRAM    DRA  0  MTM  0  0
```

Using DRAMREC facility

The DRAMREC facility assigns phrase components to locations on the DRAM. Operation of PPCO in an office requires the following phrases. The DRAMREC assigns these phrases to a specified card on a DRAM. The DRAMREC normally assigns these phrases at load build time.

Sample DRAMREC input

```
   DRAM        PHRASENAME     LENGTH      BLOCK   PHRASENO
_____________________________________________________________
ASSIGN 0       MCCS10ENG      1           0       49
```

Datafilling table DRMUSERS

Datafill for TOPS Authorization Code Billing for table DRMUSERS appears in the following table. The fields that apply to TOPS Authorization Code Billing appear in this table. See the data schema section of this manual for a description of the other fields.

Datafilling table DRMUSERS

Field	Subfield or refinement	Entry	Explanation and action
USERANN		MCCSTOPS	User announcements. Enter the MCCSTOPS 17.

Datafill example for table DRMUSERS

Sample datafill for table DRMUSERS appears in the following example.

MAP example for table DRMUSERS

```
USERANN           PHSLIST
_____________________________________________________
MCCSDRAMS 10      MCCS17ENG  RAOENG  $
```

TOPS Authorization Code Billing (end)

Tools for verifying translations

The TOPS Authorization Code Billing does not use translation verification tools.

SERVORD

The TOPS Authorization Code Billing does not use SERVORD.

TOPS Commercial Credit Card

Ordering codes

Functional group ordering code: ABS00101

Functionality ordering code: not applicable

Release applicability

TOPS08.1 and up

TOPS Commercial Credit Card was introduced in TOPS03.

Prerequisites

To operate, TOPS Commercial Credit Card requires the following functional groups:

- Operator Services Basic, OSB00101, and table TOPSFTR parameter TOPS_ON_OFF_SWITCH = Y
- Table TOPSFTR parameter COMMERCIAL_CREDIT_CARD_SUPPORT = Y

Description

This functionality is provided by the following features:

Feature number	Feature name
AN0409	TOPS Commercial Credit Card Validation (TOPS03)
AF6956	TOPS Commercial Credit Card Sales Report: Protocol (TOPS08.1)
AF6957	TOPS Commercial Credit Card Sales Report (TOPS08.1)
AF6958	TOPS Commercial Credit Card Sales Report: Tools (TOPS08.1)
AF6918	CCM Enhancements for TOPS08

This functionality was initially released in TOPS03 and enhanced in TOP08.1

TOPS03 release

Release TOPS03 provides the following:

- Allows call billing to commercial credit cards.
- Allows for independent types of validation for International Organization for Standardization (ISO) billing cards, domestic cards, and billed

TOPS Commercial Credit Card (continued)

numbers (collect and third) that begin with the same digits. Note, an ISO billing card is any billing card that conforms to ISO 7812 standards. Both CCITT telephony calling cards and commercial credit cards are ISO cards.

- Allows queries for commercial credit cards to be sent to a different database than queries for 14 digit directory number (DN) calling cards, even when they begin with the same leading digits.
- Allows LUHN digit checking to be turned on or off for ISO cards datafilled in Table INTCCFMT.

TOPS08.1 release

Release TOPS08.1 provide an enhancement that sends charge information to the Line Information Data Base (LIDB) at the end of a call for calls that are billed to a commercial credit card. This charge information is used by the commercial credit card supplier to adjust the credit limit available to the owner of the commercial credit card.

This enhancement affects the following sections:

- Operation - see the list of subsections at the beginning
- Limitations and restrictions - see the new subsection
- Interactions - see the new subsection
- Billing - see the new subsection
- Datafill procedure
  - — Table OFCENG parameter CRS_SUBRU_POOL2 provisioning is changed.
  - — Table TOPSPARM new parameter CCARD_SALES_REPORT_ACTIVE enables this enhancement.
  - — Table ACCSDB has new field UPDDATA and refinements
  - — Table CCVPARMS field SEQQRY must be set to Y for sequence calls.
- Translations verification tools - CI increment tool ACCSVER displays two new fields in the LIDB query response.

TOPS Commercial Credit Card (continued)

Operation

The contents of this section are the following, which show the associated releases:

- Background (TOPS03)
  - — Evolution of EABS
  - — Recognition/categorization of cards
  - — EABS validation over the SS7 network prior to this feature
- New functionality (TOPS03)
  - — Card types
  - — Datafill table changes
  - — Call flow of a call billed to a commercial credit card
  - — Operational measurements
  - — Feature optionality (activation/deactivation)
- Sales report enhancement (TOPS08.1)
  - — Sequence calls
  - — DA calls
  - — Charge calculation: internal rating
  - — Charge calculation: external rating
  - — Error handling
  - — Optionality
  - —

Background (TOPS03)

EABS freed the Operating Company from dependence upon the billing validation center (BVC) and the SS6 network for these applications by providing the SS7 network and the LIDB as an alternative.

Evolution of EABS (TOPS03)

EABS has evolved as follows:

- In BCS24, Northern Telecom introduced EABS, ABS00101. This package allows the Operating Company to query an SCP/LIDB using SS7 protocol for validation of a fixed 14-digit format calling card number.
- In BCS29, feature Expanded Calling Card Format SS7, ABS00101, extended EABS capabilities to accommodate the expanded calling card format. The CCITT format, also known as the International calling card

TOPS Commercial Credit Card (continued)

format, is specified in CCITT Recommendation E.118. The section for this package provides a description of the various calling card formats.

- In BCS31, feature package TOPS CCITT Calling Card SS7 Validation (in Extanded Calling Card Format SS7, ABS00101), extended EABS capabilities by supporting validation of the CCITT calling card over SS7 network links.
- In BCS34, feature NC0342, "Enhanced EABS Error Processing", upgraded the base EABS, ABS00101, package. This package improved the DMS error processing of SCP/LIDB response messages.

With the above packages, EABS is able to validate calling cards (CCITT or 14 digit formats) or billed numbers over the SS7 network. However, without this feature (AN0409), EABS cannot validate commercial credit cards.

Note: When the call is either collect or billed to a third number, it is classified as a billed number call. When it is billed to a calling card, it is referred to as a calling card call. Billed numbers are validated by billed number service (BNS). Calling card numbers are validated by calling card validation (CCV).

Recognition/categorization of cards (TOPS03)

CCITT telecommunications calling cards do not overlap with 14 digit domestic cards. Since all CCITT telecommunications calling cards begin with 89 and no 14 digit calling cards begin with 89, there is no problem of overlapping numbers between the two card types.

EABS validation over the SS7 network prior to this feature (TOPS03)

EABS required validation if the calling and billed numbers were different. This occurred when billing to a calling card, third number, or called number (a collect call). This may have taken place at either an operator position or in an automated environment.

Once the need for validation had been determined, table QUERYTYP, field QUERYNAM, determined the type of query. If QUERYNAM=LIDB, EABS and the SS7 network were used, which is the only case they were used.

New functionality (TOPS03)

The calling and credit card validation system is shown in the following diagram.

TOPS Commercial Credit Card (continued)

Calling and credit card validation system

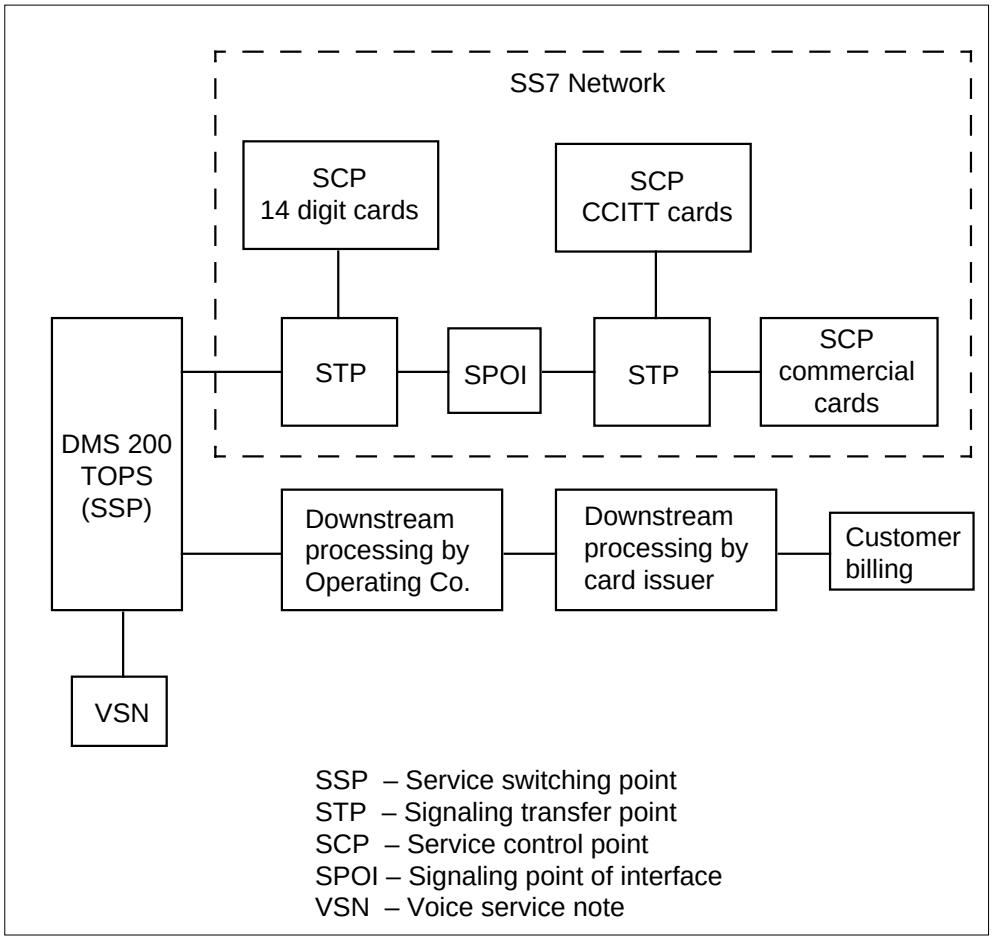

TOPS Commercial Credit Card (continued)

Card types (TOPS03)

Following are the card types:

- International organization for standardization (ISO) cards
  - — Commercial credit cards
    - – conform to ISO standard 7812
    - – do not begin with the digit 8
    - – are between 15 and 23 digits in length, including the personal identification number (PIN).
  - — International telephone and telegraph consultative committee (CCITT) telecommunications cards
    - – conform to ISO standard 7812
    - – conform to CCITT standard E.118 (a subset of ISO 7812)
    - – begin with digits 8N, where N is a digit in the range 2-9
    - – are between 5 and 23 digits in length

  All CCITT telecommunications cards begin with 89. ISO 7812 allows telecommunications cards to begin with 80 to 89. Once all possible combinations beginning with 89 have been issued, other leading digits (80-88) may be used. Therefore, those leading digits may exist in the future. Since 14 digit calling cards presently exist that begin with 80 and 81, this feature assumes that CCITT will restrict issuance of telecommunications cards to those beginning with 8N, where N is a digit between 2 and 9. The purpose of this restriction is to avoid an overlap between CCITT cards and 14 digit calling cards. This feature also assumes that Bellcore will restrict issuance of 14 digit calling cards so that no 14 digit cards are issued that begin with 8N.

- Domestic calling cards.

  These are cards issued on a country basis. They usually are of a fixed length within each country, but may vary in length from country to country.

TOPS Commercial Credit Card (continued)

Since the format of these cards is not defined by an international standards body, they may potentially overlap with ISO cards.

— North American, 14 digit DN calling cards
  – have a fixed length of 14 digits
  – begin with a valid NPA
  – have a fourth digit in the range 2 -9
  – have a 4 digit PIN

— North American, Revenue Accounting Office (RAO) calling cards
  – have a fixed length of 14 digits
  – begin with a 3 digit series (in the range 600-799) that represents the RAO
  – differ from the 14 digit DN card in that the fourth digit is 0 or 1

— Card Issuer Identifier (CIID) cards. TOPS views these cards as a form of RAO cards
  – these cards have a fixed length of 14 digits. The 14 digits are comprised of two parts, a 10 digit account number and a 4 digit PIN.
  – the account number consists of a six digit code and a 4 digit customer account number. The six digit code is assigned to requesting inter-exchange carriers for their use in 14-digit telecommunication cards and is of the format NXXWXX. Where the N range is 2-9, X range is 0-9, and W is either 0 or 1. These six digits are known as the Card Issuer Identifier (assigned by Bellcore; code assignments were first made in the 8XXWXX and 9XXWXX series).
  – the Customer Account Number is assigned by the card issuer with a format of XXXX, where X is in the range is 0-9
  – The PIN has a range of 2000-9999

— Overseas calling cards
  – are an alphanumeric variable length digit string
  – begin with a country code 2-3 digits in length
  – contain an alphabetical character, following the country code, indicating the dates the credit card number is valid
  – contain an account number that follows the alphabetical character; the length of the account number varies depending upon the issuing country

TOPS Commercial Credit Card (continued)

A comparison of the card types is shown in the following table.

Calling/credit card types

Card type	Example	Overlaps with card type	Supported with feature	Supported without feature
Commercial credit card	5146-4444-3333-2221-2000	14 digit (DN, RAO/CIID)	Yes	No
CCITT card	8912229199918064-2000	None	Yes	Yes
14-digit DN card	514-644-4433-2000	Commercial credit card	Yes	Yes
14-digit RAO card	601-056-4444-2000	Commercial credit card	Yes	Yes
14-digit CIID card	239-056-4444-2000	Commercial credit card	Yes (See note)	Yes (See note)
Overseas card	33-C-123456	None	Yes	Yes

Note: CIID cards are not officially supported by TOPS. However, since they are a form of an RAO card, TOPS handles them as if they are RAO cards.

Datafill table changes (TOPS03)

This feature introduces new table CARDBRND (Card Brand) and obsoletes existing table QUERYTYP (Query Type). Existing tables INTCCFMT (International Calling Card Format), CCVPARMS (Calling Card Validation Parameters), and BNSPARMS (Billed Number Service Parameters) are changed by this feature. Also, new parameter CCV_ACCS_15TH_DIGIT_TIMER is added to table TOPSPARM (TOPS Office Parameters). Refer to the datafill section for further details.

Call flow of a call billed to a commercial credit card (TOPS03)

The call flow for a commercial credit card used for billing is outlined below.

1. Entry of card number

   A commercial credit card may be entered by the subscriber via Automated Alternate Billing Service (AABS) or Automated Calling Card Service

(ACCS) or it may be entered by an operator from an Operator Work Station (OWS).

2. Categorization of the card

   a. If the card matches a tuple in table INTCCFMT, then:

      i. If the card length matches that in table INTCCFMT, then the card is considered an ISO card (either CCITT or commercial credit card). If the card does not begin with 8N and is between 15 and 23 digits long, it is considered a commercial credit card. Otherwise, it is considered a CCITT card.

      ii. If the card length does not match that in table INTCCFMT, the card is not an ISO card. If it contains non-digit characters and passes existing overseas card checks, it is an overseas card. Otherwise, if the length is 14 digits and North American checks pass, it is a North American card. If the length is less than 14 digits, it is considered a 3rd number rather than a card number

      iii. If the card could not be categorized by step i or ii, above, it is considered an invalid card.

   b. If the card did not match a tuple in table INTCCFMT, it is something other than an ISO card. This feature does not change the way non-ISO cards are categorized and validated.

3. Validation of a commercial credit card

   a. The commercial credit card digits must match a tuple in table INTCCFMT. Field PARMSIDX of the tuple in INTCCFMT that matches the commercial credit card is used to access table CCVPARMS. Table CCVPARMS provides several parameters and indexes into table ACCSERR (used for error processing, when required). These parameters provide a variety of information that is related to either launching the query or receiving the response. One significant parameter that is used in the query is the global title name (GTNAME). Another key parameter used is the new field VALTYPE.

   b. Assuming selector field VALTYPE in CCVPARMS is set to LIDB, a query is launched from the DMS to the SCP using the GTNAME found in Table CCVPARMS. The database associated with the SCP validates the card and returns an appropriate response to the DMS.

   c. Upon receipt of the SCP response by the DMS, the call is allowed or disallowed, depending upon the content of the response message.

4. Billing/AMA Recording

   When the call is over, a billing (AMA) record is generated by the DMS. The AMA record contains Module code 052 (alternate billing). This

TOPS Commercial Credit Card (continued)

activity does not implement any changes to module code 052. The AMA record is processed downstream from the Operating Company and the final bill is presented to the subscriber/card holder in the commercial credit card bill.

Operational measurements (TOPS03)

This feature expands existing OM group, TOPS International Calling Card (TOPSINCC) by adding two new registers, LENPASS (Length Pass) and LENFAIL (Length Fail). Also, the OM group is now indexed by the CARDBRND from table INTCCFMT, field CARDBRND, for a card. Example datafill is shown below.

OM group TOPSINCC sample datafill

```
CARDBRND   INTCCFMT   LUHN   LUHN   VALC   LENPASS   LENFAIL
                      PASS   FAIL   CTRN
_____________________________________________________________
CCITT        200       145     5      N      150       50
CCISSUER1    300       200     50     N      250       50
```

The values in fields LENPASS and LENFAIL, when added together, should equal the value in field INTCCFMT. The values in fields LUHNPASS and LUHNFAIL, when added together, should equal the value in field LENPASS. Following are register descriptions.

OM group TOPSINCC registers

Register	Status	Measurement	Pegging condition
INTCCFMT	Old	Number of special numbers that match field ISSUERID in table INTCCFMT and are considered potential ISO calling cards. Note that no format checks (except for ISSUERID match) have been performed.	When a special number is entered and it matches an ISSUERID entry in table INTCCFMT.
LUHNPASS	Old	Number of ISO calling cards that passed the length check in table INTCCFMT and the LUHN check digit format check.	When an ISO calling card passes length checks in table INTCCFMT and passes the LUHN check digit format check.

OM group TOPSINCC registers

Register	Status	Measurement	Pegging condition
LUHNFAIL	Old	Number of ISO calling cards that passed the length check in table INTCCFMT, but failed the LUHN check digit format check.	When an ISO calling card passes length checks in table INTCCFMT then fails the LUHN check digit format check.
VALCCTRN	Old	Number of valid ISO calling cards that are marked in table INTCCFMT for transitional validation.	When an ISO calling card passes length checks in table INTCCFMT then fails the LUHN check digit format check.
LENPASS	New	Number of special numbers that match field ISSUERID in Table INTCCFMT and are considered potential ISO calling cards and whose length matches the card length specified in Table INTCCFMT.	When a special number is entered and it matches an ISSUERID entry in Table INTCCFMT and its length matches that specified in Table INTCCFMT.
LENFAIL	New	Number of special numbers that match field ISSUERID in Table INTCCFMT and are considered potential ISO calling cards but, whose length does not match the card length specified in Table INTCCFMT.	When a special number is entered and it matches an ISSUERID entry in Table INTCCFMT, but its length does not match that specified in Table INTCCFMT.

Feature optionality (activation/deactivation) (TOPS03)

This feature is optional and controlled by Software Optionality Control (SOC). There are two possible SOC states, IDLE and ON.

- IDLE: When this feature is set to IDLE, all changes to datafill tables by this feature still exist, i.e. the datafill changes are not optional. When this feature is in the IDLE state, commercial credit cards can be datafilled in table INTCCFMT, but calls billed to those commercial credit cards are blocked and the database query is not launched. Also, the value specified by parameter CCV_ACCS_15TH_DIGIT_TIMER in table TOPSPARM is not used when this feature is in the IDLE state.
- ON: When this feature is set to ON, calls can be billed to any commercial credit card (datafilled in table INTCCFMT). If a call is billed to a commercial credit card, a query is launched to the database for card validation. Then, as a result of the query, billing is either accepted, blocked, or the call is sent to a live operator. Also, when this feature is ON,

TOPS Commercial Credit Card (continued)

table TOPSPARM parameter CCV_ACCS_15TH_DIGIT_TIMER is used.

There are no datafill requirements to activate or deactivate this feature, i.e. the SOC state can be changed at any time without consideration of datafill.

Sales report enhancement (TOPS08.1)

On the initial query of the LIDB database for a commercial credit card, two new parameters are returned in the LIDB response message. These new parameters are an Authorization Number and a Call Update Required Indicator. If table TOPSPARM new parameter CCARD_SALES_RPT_ACTIVE = Y, the new LIDB parameters are used to determine if a new query containing charge information will be sent. If a new query (Call Update Query) is required, conversation time and charges are calculated and sent to the LIDB at the end of the call.

Sequence calls (TOPS08.1)

If the calling party does not disconnect but places a sequence call, the acknowledgment for the first Call Update Query is ignored. If the table CCVPARMS entry SEQQRY is set to Y for the card, a second Call Update Query is sent upon termination of the sequence call. Therefore a Call Update Query is sent for each call in a call sequence scenario, but only the final acknowledgment message is processed.

Table CCVPARMS field SEQQRY must be set to Y for the call update query to be sent on a sequence call. If this field is set to N, no call update query is sent on sequence calls.

DA calls (TOPS08.1)

If a DA call is billed to a credit card, and the database indicates a Call Update Query is required, the Call Update Query is sent as soon as the card is verified. This is possible because the billing of a DA call is a flat rate and does not depend on conversation time.

If call completion is offered and accepted, a separate query is sent at the end of the call just as any other toll and assist (TA) call. An important note is that a second credit card validation query is not done on the credit card in this scenario, for automated DA call completion. This means that the Call Update Query uses the same authorization code for both the DA and call completion parts.

If surcharges apply to call completion, the surcharge is included in the amount sent to the database in the charges for the completed call.

A second credit card verification query is not done on a credit card for call completion if the DA portion is billed to the credit card, and the `continue billing' method is chosen for the call completion part of the call. Because of this, there is only one authorization number available for both call update queries in this scenario. This means there are two call update queries sent with the same authorization code, one for the DA portion and one for the call completion part of the call.

Charge calculation: internal rating (TOPS08.1)

If a Call Update Query is required for a call, the conversation time and charges are calculated when either party terminates. The existing procedures to calculate the Time and Charge are used.

On a call that has had Time and Charge calculations, it is not necessary for the calculations to be done again for the Call Update Query. The existing calculations have been stored, so are available when the query is sent.

This feature is compatible with both the North American (N_AMERICAN) and the international (OPEN_NUMBERING) numbering plans. The charge calculation procedures use the correct rating procedures based on the numbering plan in use.

Charges are calculated according to the numbering plan, North American or open numbering (global).

Charge calculation: external rating (TOPS08.1)

The statements made for internal rating apply to external rating as well. At the end of a call that requires a Call Update Query, an external rating query is sent for the charges. Once the response is received, the Call Update Query is sent.

Error handling (TOPS08.1)

For the call update LIDB queries, a TOPS602 log is ouput under the following conditions:

- The query cannot be sent by the SS7 system. An SS7 system log is generated describing the failure. And, the TOPS602 log indicates that the query was not sent.
- The query was not sent due to automatic call gaping (ACG) in effect. The TOPS602 log is generated with appropriate text.
- The call could not be rated due to an internal or external rating issue.

TOPS Commercial Credit Card (continued)

- A logical terminal identifier (TID) cannot be allocated to the call. The TOPS602 log is generated with appropriate text. A logical TID is a resource mechanism used for a Call Update Query.
- The acknowledgment to the Call Update Query was not received within the time-out parameter set in table CCVPARMS. A TOPS602 log is generated with appropriate text.

The TOPS600 log is modified to report transaction capability application part (TCAP) problems encountered when attempting to send the call update query. The TOPS600 log is generated for the following conditions:

- The query could not be routed based on the billing number provided.
- There are no transaction IDs available to route the message.
- The query could not be sent because ACG was in affect.
- The ACCS subsystem (ACCSGT) is out of service.

Optionality (TOPS08.1)

The TOPS Commercial Credit Card SOC option (ABS00008) must be ON and table TOPSPARM parameter CCARD_SALES_RPT_ACTIVE must be set to Y for this enhancement to operate.

Translations table flow

The TOPS Commercial Credit Card translations tables are described in the following list:

- Table INTCCFMT - All ISO card numbers must be datafilled
- Table CCVINFO - 14 digit card numbers may be optionally datafilled
- Table CARDBRND - defines card brands
- Table CARRSCRN - carrier screening
- Table CCVPARMS - calling/credit card parameters
- Table BNSINFO - billed number index into table BNSPARMS
- Table BNSPARMS - billing number parameters
- Table ACCSERR - automatic calling/credit card error processing

The TOPS Commercial Credit Card translation process is shown in the flowchart that follows.

Table flow for TOPS Commercial Credit Card

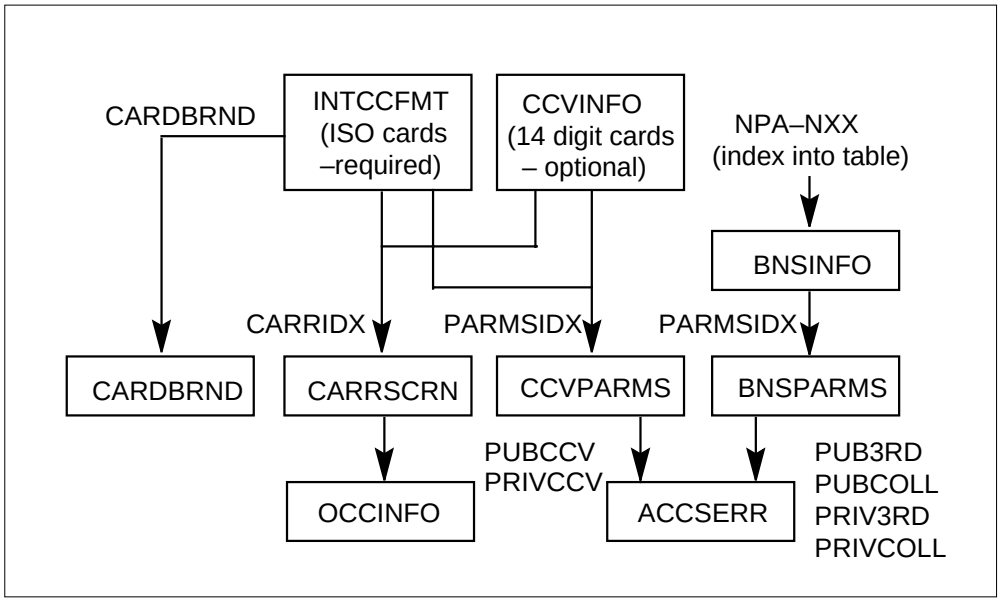

The following table lists the datafill content used in the flowchart.

Datafill example for TOPS Commercial Credit Card

Datafill table	Example data
INTCCFMT	441644 10 4 N N CCC2 1 0
CCVINFO	891333 0 1
CARDBRND	3 CCC2
CARRSCRN	1 ALL
CCVPARMS	0 LIDB $ N 2 N 0 0
BNSINFO	2024 2
BNSPARMS	1 LIDB BNSGT 2 4 4 2 2

Limitations and restrictions

The following limitations and restrictions apply to TOPS Commercial Credit Card:

TOPS Commercial Credit Card (continued)

TOPS03 release

The following limitations and restrictions apply to this release:

- Commercial credit cards should:
  - — conform to ISO standard 7812
  - — begin with a Bank Identity Number (BIN) code which is compliant with credit card industry standards (ISO 7812). However, TOPS does not enforce compliancy of the BIN code to the ISO 7812 standard.
  - — not begin with a digit 8
  - — be between 15 and 23 digits in length, including the PIN
- It is assumed that Bellcore reserves the 8NX NPA so that an overlap of 14 digit cards and 8NX CCITT cards does not occur. For 8NX, N is a digit in the range 2-9, and X is a digit in the range 0-9.
- It is assumed that CCITT reserves the 80 and 81 leading digits to prevent an overlap with existing 14 digit calling cards.
- Cards with the following leading digits are not supported by TOPS ACCS: 0, 11, 12, 15, 17 and 19.

TOPS08.1 release

The following limitations and restrictions apply to this release:

- The LIDB must be compatible with the new protocol messages introduced by the TOPS Commercial Credit Card Sales Report feature.
- If the Commercial Credit Card feature's SOC (ABS00008) state is not set to ON, no LIDB query is sent for commercial credit cards, thereby disabling this enhancement.
- Activation of this enhancement is controlled by table TOPSPARM parameter CCARD_SALES_RPT_ACTIVE.
- The original call may be handled by an automated system or an operator, but the credit card must be validated by a compatible LIDB in order for this enhancement to apply.
- This enhancement is not supported in the OSSAIN environment.

Interactions

The following paragraphs describe the interactions between TOPS Commercial Credit Card and other functionalities.

TOPS03 release

The introduction of commercial credit cards causes an increase in wait time for subscribers attempting to enter a 14 digit calling card which has leading digits

that match datafill in table INTCCFMT (when using the ACCS environment). This additional wait time occurs only if SOC is set to ON for this functionality. Otherwise, if SOC is IDLE, there is no additional wait time. This additional wait time is because TOPS no longer knows if the card is a 14 digit card or an ISO card. Therefore, TOPS must await entry of a 15th digit. If the 15th digit is entered, TOPS concludes that the card is an ISO card. If the timer expires (i.e., the 15th digit is never entered), TOPS assumes the card is a 14 digit card. Note, if entry of the card number is followed by entry of the pound sign (#), no inter-digit timing delay is incurred.

This feature allows datafill of the amount of time TOPS waits for entry of the 15th digit in the ACCS environment. It does not do so for the AABS environment. For AABS, the VSN controls digit collection and is responsible for resolving any inter-digit timing issues.

TOPS08.1 release

When a call is ended by either the calling or called party, the Call Update Query is sent if applicable. When a disconnect occurs, the disconnect processes handle the deallocation of the hardware resources just as they would without this enhancement. If the called party terminates, and the calling party decides to make a sequence call, the acknowledgment sent by the LIDB for the first call is ignored. Upon termination of the second call, another Call Update Query is sent and the same process followed if the caller decides to make another sequence call.

The DMS switch may query the credit card for each sequence call, based upon table CCVPARMS. The Call Update Query, however, is only sent on a sequence call if the field `SEQQRY' in table CCVPARMS is set to Y for the card. This means the Call Update Query is only sent on a sequence call if a credit card validation query is done for each call during sequence calling.

Processing of the LIDB acknowledgment consists of determining if the acknowledgment was received within the time-out parameter specified in table CCVPARMS.

For Time and Charges calls, the call duration and charge calculations are done for the Time and Charges as prior to this enhancement. And, the call duration and charge calculations are not done a second time for calls that require a call update query. The DMS switch does not send the query until after Time and Charge calculations have been done. The duration and charges from the Time and Charges calculation are stored by TOPS software, so are available for use in the Call Update Query.

TOPS Commercial Credit Card (continued)

Activation/deactivation by the end user

TOPS Commercial Credit Card requires no activation or deactivation by the end user.

Billing

TOPS03 release

Although this feature does not change AMA, provisions must be made in downstream processing of the AMA records to appropriately handle the new commercial credit card AMA records that are created. They can be recognized by Module Code 052, Table 400 (Format Identifier), that has a value of 1 and the billed number begins with digits other than 8N, where N is a digit between 2 and 9.

Module Code 52 is appended to the billing record on all alternately billed calls and contains the following:

- The type of billing for the call
- The format of the credit card
- The billing number
- The calling card subaccount number
- The type of response received from the database
- The action taken by the TOPS system based on the database response

TOPS08.1 release

When a call is billed to a commercial credit card, module code 611 is appended if an Authorization number is returned from the initial LIDB query.

Module code 611 contains:

- Table 237, Generic Context Identifier that is alway set to new value 80002 which means Authorization number. Digits 6 and 7 indicate the size of the authorization number.
- Table 126, Digits String, is set to the Authorization number.

Also, another module code is appended for commercial credit card calls that have a call update query. The Module code is either 036 (for open numbering) or 060 (for North American numbering). The charge amount includes applicable taxes for the call.

If a commercial credit card is validated and a call update required is returned on the query, but final billing is changed on the call, a call update query is not sent at the end of the call. And, the billing record reflects the final billing type.

Module code 611 uses CRS_SUBRU_POOL2 extension blocks which are provisioned by the CRS_SUBRU_POOL2_SIZE parameter in table OFCENG.

Station Message Detail Recording

TOPS Commercial Credit Card does not affect Station Message Detail Recording.

Datafilling office parameters

The following table shows the office parameters used by TOPS Commercial Credit Card. For more information about office parameters, refer to *Office Parameters Reference Manual.*

Office parameters used by TOPS Commercial Credit Card

Table name	Parameter name	Explanation and action
OFCENG	CRS_SUBRU_POOL2_SIZE	Module code 611 uses CRS_SUBRU_POOL2 extension blocks which are provisioned by the CRS_SUBRU_POOL2_SIZE parameter.

Datafill sequence

The following table lists the tables that require datafill to implement TOPS Commercial Credit Card. The tables are listed in the order in which they are to be datafilled.

Datafill tables required for TOPS Commercial Credit Card

Table	Purpose of table
QUERYTYP	Query type. Specifies data base for a billing number
BNSINFO	Billing number service information. Billing number information
BNSPARMS	Billing number service parameters. Billing number parameters
CCVINFO	Calling/credit card verification information. Calling/credit card information
CCVPARMS	Calling/credit card verification parameters. Calling/credit card parameters
CARDBRND	Card brand. Define card brands
INTCCFMT	International calling card format. List ISO card numbers
TOPSPARM	TOPS parameters
ACCDB	Automatic credit card service database

TOPS Commercial Credit Card (continued)

Datafilling table QUERYTYP

Table QUERYTYP is obsoleted by this feature. Its functionality (to determine the type of validation performed for a calling card, credit card, or billed number) is replaced by adding new selector field VALTYPE (Validation Type) to Tables BNSPARMS and CCVPARMS. This change provides the Operating Company greater granularity in specifying the method used to validate the calling card, credit card, or billed number.

Datafilling table BNSINFO

The following table shows the datafill specific to TOPS Commercial Credit Card for table BNSINFO. Only those fields that apply directly to TOPS Commercial Credit Card are shown. Refer to the *Data Schema* section of this manual for a description of the other fields.

Datafilling table BNSINFO

Field	Subfield or refinement	Entry	Explanation and action
BNSDIGS		1-18 digits	Billling number screening digits. Index into table by the NPA-NXX (or any portion) of the queried number. If a billed number has no match in this table, then tuple 0 (default tuple) in table BNSPARMS is used.
PARMSIDX		0-300	Index into table BNSPARMS. This allows more than one issuerid to index the same tuple in table BNSPARMS.

Datafill example for table BNSINFO

The following example shows sample datafill for table BNSINFO.

MAP display example for table BNSINFO

```
BNSDIGS      PARMSIDX
-----------------------------------------------------
212220          1
2024            2
919220          1
919555          2
202555          2
```

Datafilling table BNSPARMS

The following table shows the datafill specific to TOPS Commercial Credit Card for table BNSPARMS. Only those fields that apply directly to TOPS

TOPS Commercial Credit Card (continued)

Commercial Credit Card are shown. Refer to the *Data Schema* section of this manual for a description of the other fields.

Datafilling table BNSPARMS

Field	Subfield or refinement	Entry	Explanation and action
VALAREA		see subfields	Validation area. This field consists of subfield VALTYPE and refinements.
	VALTYPE	MANUAL, BLK, SDB, BVC, or LIDB	Validation type. Selector VALTYPE determines the method of validating the collect or third number. Prior to this feature, that function was performed by table QUERYTYP. Only when VALTYPE=LIDB do the remaining fields (GTTNAME, TIMEOUT, PUBCOLL, PRIVCOLL, PUB3RD, and PRIV3RD) appear. The default is LIDB.

Datafill example for table BNSPARMS

The following example shows sample datafill for table BNSPARMS.

MAP display example for table BNSPARMS

```
IDX                                                  VALAREA
-------------------------------------------------------------
 0                    LIDB   $       2  0   0   0  0
 1                    LIDB   BNSGT$  2  4   4   2  2
299                   BLK
300                   MANUAL
301                   SDB
```

The above example shows default tuples 0, 299, and 300.

Datafilling table CCVINFO

The following table shows the datafill specific to TOPS Commercial Credit Card for table CCVINFO. Only those fields that apply directly to TOPS

TOPS Commercial Credit Card (continued)

Commercial Credit Card are shown. Refer to the *Data Schema* section of this manual for a description of the other fields.

Datafilling table CCVINFO

Field	Subfield or refinement	Entry	Explanation and action
CCVDIGS		1-18 digits	Calling card verification digits. For domestic calling cards, this is the index into the table by the NPA-NXX or RAO-0/1XX of the calling card. If a calling card has no match in this table, then tuple 0 (default tuple) in table CCVPARMS is used. Datafill of 14-digit cards in this table is optional. If a card is not datafilled, default tuple 0 in table CCVPARMS is used.
PARMSIDX		0-300	Index into table CCVPARMS. This allows more than one issuerid to index the same tuple in table BNSPARMS.

Datafill example for table CCVINFO

The following example shows sample datafill for table CCVINFO.

MAP display example for table CCVINFO

```
CCVDIGS      PARMSIDX   CARRIDX
-----------------------------------------------------
212220           254       0
891222             3       0
891333             0       0
8915555            2       0
9194             254       0
919555           254       0
```

Datafilling table CCVPARMS

The following table shows the datafill specific to TOPS Commercial Credit Card for table CCVPARMS. Only those fields that apply directly to TOPS

Commercial Credit Card are shown. Refer to the *Data Schema* section of this manual for a description of the other fields.

Datafilling table CCVPARMS

Field	Subfield or refinement	Entry	Explanation and action
VALAREA	VALTYPE	MANUAL, BLK, SDB, BVC, or LIDB	Validation area. Selector VALTYPE determines the method of validating the collect or third number. Prior to this feature, that function was performed by table QUERYTYP. Only when VALTYPE=LIDB do the remaining fields (GTTNAME, CLDREQ, TIMEOUT, SEQQRY, PUBCCV, and PRIVCCV) appear. The default is LIDB.
	SEQQRY	Y	Sequence query. This field must be set to Y for the commercial credit card sales report to include sequence calls.

Datafill example for table CCVPARMS

The following example shows sample datafill for table CCVPARMS.

MAP display example for table CCVPARMS

```
IDX                                                  VALAREA
-----------------------------------------------------------
 0                     LIDB  $   N  2   N   0   0
 1                     LIDB   ACCSGT $  N  3   Y  1  0
299                    BLK
300                    MANUAL
301                    SDB
```

The above example shows default tuples 0, 299, and 300.

Datafilling table CARDBRND

The following table shows the datafill specific to TOPS Commercial Credit Card for table CARDBRND. Only those fields that apply directly to TOPS

TOPS Commercial Credit Card (continued)

Commercial Credit Card are shown. Refer to the *Data Schema* section of this manual for a description of the other fields.

Datafilling table CARDBRND

Field	Subfield or refinement	Entry	Explanation and action
VALUE		0-62	Value. An arbitrarily assigned number with the restrictions that no two card brands can be associated with the same VALUE number and no two VALUE numbers can be associated with the same (CARDBRND) card brand. Tuple 0 is default and cannot be deleted or changed.
CARDBRND			Card brand. A 32 character string name definition of the card issuer for use in Table INTCCFMT. The CARDBRND must be defined in this table before it can be used in Table INTCCFMT, field CARDBRND.

Datafill example for table CARDBRND

The following example shows sample datafill for table CARDBRND.

MAP display example for table CARDBRND

```
VALUE    SYMBOL
---------------------
  0      defaultname
  1      CCC1
  2      CCC2
  3      CCITT1
```

Datafilling table INTCCFMT

The following table shows the datafill specific to TOPS Commercial Credit Card for table INTCCFMT. Only those fields that apply directly to TOPS

Commercial Credit Card are shown. Refer to the *Data Schema* section of this manual for a description of the other fields.

Datafilling table INTCCFMT

Field	Subfield or refinement	Entry	Explanation and action
ISSUERID		4 to 7 digits	Issuer identification. This field is unchanged. All ISO cards must be datafilled in this table. If an ISO card is not datafilled in this table, the card is interpreted as a 14-digit card and table CCVINFO is checked. If the card is not datafilled in table CCVINFO, default tuple 0 in table CCVPARMS is used. All ISO cards in table INTCCFMT must have a matching entry in table CCVINFO
LUHNCHK		Y or N	LUHN check digit. Turns checking of the LUHN check digit for ISO card on (Y) or off (N). The default is Y.
CARDBRND		from table CARDBRND	Card brand. Operating company assigned name of card issuer for billing card in field ISSUERID.
CARRIDX		0-62	Carrier index. Index into table CARSCRN.
PARMSIDX		0-254	Parameters index. Index into table CCVPARMS.

Datafill example for table INTCCFMT

The following example shows sample datafill for table INTCCFMT.

MAP display example for table INTCCFMT

```
ISSUERID ACCSIDSIZ PINSIZE VAL14DIG LUHNCHK CARDBRND
CARRIDX PARMSIDX CARRSEL
------------------------------------------------------
441644      10         4       N        N     Defaultname
   0        1      Y
514644      10         4       N        Y     CCC1
   0        1      N
891222      11         4       N        Y     CCITT1
   0        3      N
```

Datafilling table TOPSPARM

The following table shows the datafill specific to TOPS Commercial Credit Card for table TOPSPARM. Only those parameters that apply directly to

TOPS Commercial Credit Card (continued)

TOPS Commercial Credit Card are shown. Refer to the *Data Schema* section of this manual for a description of the other parameters.

Datafilling table TOPSPARM

Parameter	Explanation and action
CCV_ACCS_15TH_DIGIT_TIMER	Specifies the time that ACCS will wait for entry of a 15th digit after the 14th digit is entered. This parameter does not apply to AABS. It does apply to ACCS, as the name implies. Range is 1-15 seconds.
CCARD_SALES_REPORT_ACTIVE	This parameter enables the commercial credit card sales report. The values are Y (enable) and N (disable).

Datafill example for table TOPSPARM

The following example shows sample datafill for table TOPSPARM.

MAP display example for table TOPSPARM

```
PARMNAME                                          PARMVAL
--------------------------------------------------------
CCV_ACCS_15TH_DIGIT_TIMER                           2
CCARD_SALES_REPORT_ACTIVE                           Y
```

Datafilling table ACCSDB

Table ACCSDB is used for testing to represent the LIDB database for ACCS queries. The simulated LIDB response is equivalent to the tuple datafilled in table ACCSDB.

The following table shows the datafill specific to TOPS Commercial Credit Card for table ACCSDB. Only those fields that apply directly to TOPS

Commercial Credit Card are shown. For a description of the other fields, refer to the data schema section of this document.

Datafilling table ACCSDB

Field	Subfield or refinement	Entry	Explanation and action
ACCSCOMP		RESULT	ACCS component type. When the entry is result, new subfield UPDDATA and refinements are added for commercial credit cards only.
	UPDDATA	Y or N	Call update data. This field indicates whether call update data is present. The values are Y (present) and N (not present). This field should be datafilled with N for non-commercial credit cards since the call update data is never present in a real query. If the entry is Y, datafill refinements UPDREQ and AUTHDIGS.
	UPDREQ	Y or N	Call update required. This field appears only if subfield UPDDATA = Y. This field indicates whether a call update query is required for the call. The values are Y (required) and N (not required).
	AUTHDIGS	up to 15 digits	Authorization digits. This field appears only if subfield UPDDATA = Y. Enter the authorization number.

Datafill example for table ACCSDB

The following example shows sample datafill for table ACCSDB.

MAP display example for table ACCSDB

```
          ACCSDBKY      ACCSCOMP
                                                                ACCSDBVR
------------------------------------------------------------------------
         2222121123     RESULT
2212   UNRESTR   NILCCAN  NILSERV 3 3496  DEFAULT  VERCOLL A3RDNUM
POTSLINE 2122221212  353  NILIND    NILIND   NILIND  5555 5334 5665
N  NOSPARE NOTELSPARE  NILCOMP 1SEC 0SEC NILINT  NOTRMT   Y  Y
12345678901234
```

TOPS Commercial Credit Card (continued)

Translation verification tools

The CI increment tool ACCSVER (automatic credit card service verification) simulates checking the signal control point (SCP) database for ACCS numbers through the signaling service 7 (SS7) network without making an actual call. The command input, described in the following section, is not changed. The tool also displays information about the LIDB response, which is changed and described in a later section.

Command input (unchanged)

This tool can be called up as a CI command in either of two ways:

- ACCSVER
- TESTSS ACCS from the SCCPLOC map level when the ACCS subsystem is posted.

The command input is not changed. The following are the command format and an example:

>accsver <intl> <clgnum> <cldnum> <billnum> [<pin>] [<ccitt>] [<val14dig>] [<gtname>]

>accsver n 6093201234 2102201212 5146444433331212

The above command format shows brackets for parameters with optional entries. The following are descriptions of the parameters:

- <intl> - International call (overseas)? If yes, enter Y. Otherwise, enter N.
- <clgnum> - Calling number
- <cldnum> - Called number
- <billnum> - Billing number
- <pin> - Personal identification number in the range 0-9999 or no number. If a number is entered, a calling card verification (CCV) query is launched. If no number is entered, the system defaults to a billed number screening (BNS) query. For information on BNS queries, refer to functionality Exchange Alternate Billing Service, ABS00101.
- <ccitt> - Is this a CCITT format calling card number? Enter Y if CCITT card, N if not a CCITT card, or make no entry. If no entry, the system assumes that this parameter is not applicable, which occurs, for example, for a collect billed number. If no <pin> parameter is entered, the system assumes this is a collect billed call. Therefore, this<ccitt> parameter is ignored by the system.

- <val14dig> - Is this a valid 14-digit format calling card number? Enter Y if 14-digit format or N if not a 14-digit format.
- <gtname> - Global title name defined in table C7GTTYPE. If no entry is made, the default is used.

Display output (changed)

This functionality changes the ACCSVER tool as follows:

- Two new field are added to the output display for commercial credit card entries.
  - — Call update required - This field indicates whether a sales report is required at the end of the call. The values are Y (yes) and N (no).
  - — Authorization number - An authorization number is generated by the LIDB for each successful commercial credit card query. This number is 1 to 15 digits in length.
- Table ACCSDB field ACCSDBVR has three new subfields. Refer to the datafill procedure section for more information.

The following are example reports.

MAP display example of ACCSVER for a non-commercial credit card

```
>accsver n 6093201234 2012201212 2012200000 2000

THE RESPONSE FROM THE DATABASE TOOK 0 MINUTES, 1 SECONDS,
155 MILLISECONDS

COMPANY ID IS: 1234

RECORD STATUS INDICATOR IS STABLE

RECORD CCSAN IS: 12

PIN IS UNRESTRICTED

THE RAO NUMBER IS: 234

PRIMARY PREFERRED IC INDICATOR IS NOT INDICATED

ALTERNATE PREFERRED IC INDICATOR IS NOT INDICATED

INTERNATIONAL PREFERRED IC INDICATOR IS NOT INDICATED
>
```

TOPS Commercial Credit Card (end)

MAP display example of ACCSVER for a commercial credit card

```
>accsver n 6093201234 2012201212 5146444433331212 2000

THE RESPONSE FROM THE DATABASE TOOK 0 MINUTES, 1 SECONDS,
12 MILLISECONDS

COMPANY ID IS: 1000

RECORD STATUS INDICATOR IS DEFAULT RECORD

RECORD CCSAN IS: 1

PIN IS UNRESTRICTED

THE RAO NUMBER IS: 721

PRIMARY PREFERRED IC INDICATOR IS NOT INDICATED

ALTERNATE PREFERRED IC INDICATOR IS NOT INDICATED

INTERNATIONAL PREFERRED IC INDICATOR IS NOT INDICATED

CALL UPDATE REQUIRED: Y

AUTHORIZATION NUMBER: 12345678901234
>
```

The above report contains the new fields at the end. As previously mentioned, the new fields only appear for commercial credit cards.

SOC optionality

ACCSVER does not depend on SOC option ABS00101 for commercial credit card queries.

SERVORD

TOPS Commercial Credit Card does not use SERVORD.

TOPS DN Call Screening

Ordering codes

Functional group ordering code: ABS00101

Functionality ordering code: not applicable

Release applicability

BCS36 and later versions

Requirements

To operate, AABS Call Screening has the following requirements:

- BAS Generic, BAS00001
- Operator Services Basic, OSB00101, and table TOPSFTR parameter TOPS_ON_OFF_SWITCH = Y

Description

The following features provide this operation:

Feature number	Feature name
AN0324	TOPS DN Database Phase I

This feature contains two parts:

- Increase of the number of restricted, coin, or hotel directory numbers in which data entry can occur.
- Modification of the ANI spill to carriers for restricted, coin, or hotel directory numbers.

Operation

Background Increase the number of datafillable directory numbers

Table SPLDNID stores information on a directory number. This information includes datafill for restricted phones, coin phones, and hotel phones and devices.

Enter restricted phones with the selector RSTRCTD and a numeric index in tables RESTBIL and DARSTBIL. These tables contain billing restrictions for TA and DA calls, billing restrictions for automatic directory assistance call completion (ADACC), and custom screen displays.

Enter coin phones with the selector COIN, coin phone information, and a numeric index in tables RESTBIL and DARSTBIL. When information is not

TOPS DN Call Screening (continued)

in table RESTBIL or DARSTBIL applies, enter coin phones with dummy index of 100.

Enter hotel phones and devices with one of the following selectors:

The following is example datafill for table SPLDNID.

MAP example for table SPLDNID

```
SPLDN           SPLSEL
_____________________________________________________________
6193227000      AQTAC 3
6193228000      RSTRCTD 2
6193228001      RSTRCTD 2
6193229000      COIN STD ACTS N 100
6193229001      COIN STD ACTS Y 2
```

The following call types access table SPLDNID:

Modify the ANI spill to carriers

Calls the system passes from the DMS switch to a carrier normally send the called and calling digits and an ANI ID. The ANI ID has a one or two digit value. This value provides the carrier with additional information about the call. For example, with North American datafill an ANI digit of 0 or 00 indicates a station call. An ANI digit of 2 or 02 indicates ANI fail. An ANI digit of 6 or 06 indicates hotel. An ANI digit of 7 or 07 indicates a restricted call.

The relationship between the incoming ANI ID, call information, DMS datafill, and the ANI ID sent to the carrier appears in the following table.

ANI spill to carriers before feature

ANI spill to DMS	Call information. STATCLAS of incoming trunk group, operator action	the SPLDNID entry	the ANI spill to carrier
0 or 00	the STATCLAS: DNLOOKUP or RESTBIL	restricted or restricted coin	7 or 07
0 or 00	the STATCLAS: DNLOOKUP or RESTBIL	hotel	6 or 06
0 or 00	the STATCLAS: DNLOOKUP or RESTBIL	not restricted coin	0 or 00

ANI spill to carriers before feature

ANI spill to DMS	Call information. STATCLAS of incoming trunk group, operator action	the SPLDNID entry	the ANI spill to carrier
0 or 00	the STATCLAS: DNLOOKUP or RESTBIL	N	0 or 00
1, 01, 2, or 02	Operator keys KPBACK and calling number	restricted or restricted coin	7 or 07
1, 01, 2, or 02	Operator keys KPBACK and calling number	hotel	6 or 06
1, 01, 2, or 02	Operator keys KPBACK and calling number	not restricted coin	0 or 00
1, 01, 2, or 02	Operator keys KPBACK and calling number	N	0 or 00
7 or 07	None	Y	7 or 07
7 or 07	None	N	2 or 02

Operation

Increase the number of datafillable directory numbers

Some operating companies reach the maximum number of allowed tuples. The maximum number of tuples is approximately 20,000. The table and command changes that address this problem appear in the following table:

- The large capacity of this table is 8 million tuples. Limits to available data store can limit this capacity. This capacity solves the problem of the table

TOPS DN Call Screening (continued)

limit. This table enters screening attributes against directory numbers. The following is example datafill.

MAP example for table DNSCRN

```
      DN       ATROPTS
_____________________________________________________________
6193227000  (TOPSDB 17) $
6193228000  (TOPSDB 18) $
6193228001  (TOPSDB 18) $
6193229000  (TOPSDB 19) $
6193229001  (TOPSDB 29) $
```

New attribute TOPSDB is for field ATROPTS. An index to new table TOPSDB that indicates DN limits follows this attribute. The index range is 0-32766.

Other applications use table DNSCRN. The TOPS database only uses the TOPSDB attribute. Additional attributes of other applications that use table DNSCRN do not impact on the function of the TOPS database.

To add a tuple, check tables TOPSDB and TDBCLASS. You can delete tuples without a check of tables TOPSDB and TDBCLASS.

The CI command DNSCRNCI simplifies datafill and attribute modification for large groups of directory numbers. The CI command simplifies datafill and attribute modification with the subcommands ADDRANGE, DELRANGE, and UPDATTR. The subcommands HELP and QUIT are also available.

Table DNSCRN accepts directory numbers of variable length. Specify the number of digits in a directory number. The start and end directory numbers for the DNSCRNCI subcommands ADDRANGE, DELRANGE, and UPDATTR, must contain the same number of digits. Directory numbers in the specified range with the given number of digits are affected.

An example of the DNSCRNCI CI command appears in the following diagram:

DNSCRNCI CI command example

```
>DNSCRNCI
DNSCRNCI
     >ADDRANGE
          FROMD: 6193221000
               TOD: 6193221050
ATTROPTS: TOPSDB
     IDX:23
ATTROPTS: $
   WRITEMODE: NOREPLACE
        >QUIT
```

In the preceding example, directory numbers 6193221000-6193221050 inclusive are added to table DNSCRN. In prompt mode, the ADDRANGE command assigns attribute TOPSDB 23 with the NOREPLACE option.

The following is example datafill.

MAP example for table TOPSDB

```
DNSCRIDX          TDBCLIDX
_____________________________________________________________
   0                 0
  16                16
  17                17
  18                18
  19                19
  29                29
```

Table TOPSDB contains a numeric key and a data value. The key has a range of 0-32,766. The key is the data value from the attribute in table DNSCRN. The data value is the index in table TDBCLASS. The key and data values are the same in the preceding example datafill. This datafill practice simplifies the association of the directory number and the data. This datafill practice is not required, but recommended.

The default tuple 0 in table TOPSDB is included to be complete. The addition of tuple 0 occurs when the module loads. Tuple 0 includes a key of 0 and an index of 0. You cannot delete or change this tuple. When in phase I of the TOPS database, table DNSCRN does not require the addition

TOPS DN Call Screening (continued)

of a tuple with an attribute TOPSDB 0. A true default value can be necessary in a later phase when more indexes are in table TOPSDB.

When operating company personnel attempt to add duplicate data to table TOPSDB the system generates a warning. This warning minimizes datafill. Table control limits prevent changes or deletions to a default tuple. To add a tuple, check table TDBCLASS. To delete a tuple, check table DNSCRN.

The following is example datafill.

MAP example for table TDBCLASS

```
 IDX     TDBCLSEL              EAANI   EAANIVAL
_____________________________________________________
  0     NOSPLDNID               N
 16     RSTRCTD 6               Y     ANISUCC
 17     AQTAC 3                 N
 18     RSTRCTD 2               N
 19     COIN STD ACTS N 100     N
 29     COIN STD ACTS Y 2       N
```

Table TDBCLASS contains information for restricted and special directory numbers. Table TDBCLASS is a fixed size table with a key range of 0-1000. The data fields in table TDBCLASS are like the data fields in table SPLDNID. All of the fields are the same except for the addition of new selector EAANI and new field EAANIVAL.

The nil tuple 0 is included for this table. The addition of tuple 0 occurs when the module loads. Tuple 0 appears as `0 NOSPLDNID N`. You cannot change or delete this tuple. When in phase I of the TOPS database, do not reference tuple 0. In a later phase, this tuple can indicate that table TDBCLASS information does not apply.

Enter table TDBCLASS tuples with EAANI = N in non-equal access offices. These offices do not outpulse ANI to carriers. Operating company personnel can enter a tuple with EAANI = Y in a non-equal access office. When this condition occurs, the system allows the add command, but gives a warning.

Reference datafill hotel device information in table HOBICDEV or TOPSDEV. Reference this information before you enter a table TDBCLASS tuple with one of the following selectors: AQTAC, AQHTL, DUAQTAC, or DUAQHTL. This corresponds to the current crosscheck between tables SPLDNID, HOBICDEV, and TOPSDEV.

Enter restricted and coin phones with valid RBILCLAS indexes in table TDBCLASS. Enter the indexes as in table SPLDNID.

Table FXDNMAP provides directory number replacement for numbers entered in table TDBCLASS or table SPLDNID. The system does not provide a warning message for lost or invalid table FXDNMAP or TDBCLASS datafill. The system provides a TRK118 log.

Note: Table FXDNMAP contains a list of replacement telephone numbers. These replacement numbers are for hotel originated or restricted station calls. Offices that cannot provide ANI IDs of 6, 06, 7, or 07 serve these calls. Table FXDNMAP is not in wide use in the North American market.

Table control limits prevent changes or deletions to the default tuple. You can add a tuple without a check of table TOPSDB or DNSCRN. To delete a tuple, check table TOPSDB.

Modify the ANI spill to carriers

Before this package, all calls with table SPLDNID entries of restricted or restricted coin outpulse 7 or 07. This outpulse presents problems for carriers when the directory number is not fully restricted:

This feature allows datafill in table TDBCLASS to override the standard ANI spill to carrier as follows:

How datafill in tables TDBCLAS, SPLDNID, and EAANIID control ANI spill appears in the following table. Table EAANIID datafill for this example appears after the following figure.

ANI spill to carriers with feature using the following example table EAANIID datafill

Table TDBCLAS or SPLDNID access	Table TDBCLAS or SPLDNID tuple present	EAANI value	EAANIVAL value	ANI spill to carrier
Y	TDBCLASS	Y	ANISUCC	table EAANIID lookup: 0 or 00
Y	TDBCLASS	Y	HANISUCC	table EAANIID lookup: 6 or 06
Y	TDBCLASS	N	does not apply	same as without feature

TOPS DN Call Screening (continued)

ANI spill to carriers with feature using the following example table EAANIID datafill

Table TDBCLAS or SPLDNID access	Table TDBCLAS or SPLDNID tuple present	EAANI value	EAANIVAL value	ANI spill to carrier
Y	SPLDNID	does not apply	does not apply	same as without feature
N	does not apply	does not apply	does not apply	same as without feature

MAP example for table EAANIID

```
ANIINFO    ONEDIG  TWODIG
_____________________________________________________________
ALARM         8       08
ANIFAIL       2       02
ANISUCC       0       00
FGDCOIN       0       27
HANIFAIL      6       06
HANISUCC      6       06
ILRSHOT       6       68
ILRSREG       0       08
ILRSSPEC      7       78
INTCPT        9       09
MOBILE        2       02
ONI           1       01
OPRHNDL       0       34
SPECIAL       7       07
```

When this package is present, the system accesses information for limited or special directory numbers. The system accesses these numbers from the new TOPS database tables or table SPLDNID. When this package is not present, the system only uses table SPLDNID.

Note: The new TOPS database tables are provided in addition to table SPLDNID. This event removes the need to move datafill from table SPLDNID to the new table.

TOPS database example

This example describes how the system handles a call with a restricted calling number when this feature is in place. The following is an example. You can access the TOPS database tables in more than one way. You can make a carrier call in more than one way.

The following datafill is for an operator assisted call that arrives at the DMS switch on incoming trunk TRUNK1. The system spills the calling digits and an ANI digit of 0. Called digits are not present. The call goes to the operator position. The operator keys the called number.

MAP example for table TRKGRP

```
GRPKEY GRPTYP TRAFSNO PADGRP NCCLS
                                                    GRPINFO
_____________________________________________________________________
TRUNK1 TOPS   0  TLD  NCRT
IC MIDL 619 PTOP NLCA NSCR Y SP DNLOOKUP N Y 0 0000
BELL 16 10 10 Y N OFFHK N
```

The incoming trunk is DNLOOKUP. The ANI digit is 0. These factors make an access to the TOPS database. Look for the calling number 6193223001 in table DNSCRN. The tuple is present. The data in DNSCRN indexes the tuple in table TOPSDB. Table TOPSDB indexes the tuple in table TDBCLASS. The following are examples of table datafill.

MAP example for table DNSCRN

```
     DN       ATROPTS
_____________________________________________________________________
6193223001  (TOPSDB 31) $
```

MAP example for table TDBCLASS

```
 IDX     TDBCLSEL              EAANI   EAANIVAL
_____________________________________________________________________
  0     NOSPLDNID               N
 31     RESTR 11                Y     ANISUCC
```

The TDBCLASS field value 11 points to tuples 11 in tables RESTBIL and DARSTBIL. These tuples contain billing limits and screen display information.

MAP example for table RESTBIL

```
BILCLASS  AMARBC  SCRNDISP  BILTYPES
                          CCPDTYPS
_____________________________________________________________________
11       2      NOCOLL  (PD)(CC)(3RD)
(SPLCLG)(SPLCLD)$          NONE
```

TOPS DN Call Screening (continued)

MAP example for table DARSTBIL

```
BILCLASS  AMARBC  SCRNDISP  BILTYPES
                            CCPDTYPS
_____________________________________________________________________
11        2       NOCOLL   (PD)(CC)(3RD)
(SPLCLG)(SPLCLD)$           NONE
```

Access of table DNPIC indicates the system must outpulse this call to CARRIER1. Determine the ANI ID to spill before the outpulse occurs. For this call, EAANI = Y. Determine the ANI ID from the EAANIVAL. Access of table EAANIID for ANISUCC indicates an outpulse of a ANI ID of 0 or 00 must occur. The outgoing trunk TRUNK2 uses BELLI signaling (from table TRKGRP). The system sends the ANI digit 0 to the carrier.

MAP example for table DNPIC

```
DNKEY              DNPIC     CHOICE    CTD
_____________________________________________________________________
619 322 30 01     CARRIER1      Y       N
```

MAP example for table EAANIID

```
ANIINFO     ONEDIG   TWODIG
_____________________________________________________________________
ANISUCC       0        00
```

MAP example for table TRKGRP

```
GRPKEY GRPTYP TRAFSNO PADGRP NCCLS
                                                          GRPINFO
_____________________________________________________________________
TRUNK2  ATC      0      TLD    NCTC
OG IT MIDL NPRT NSCR 619 C111Y BELLI COMB N $
```

Translations table flow

The TOPS DN Call Screening translation process appears in the following flowchart.

TOPS DN Call Screening (continued)

Table flow for TOPS DN Call Screening

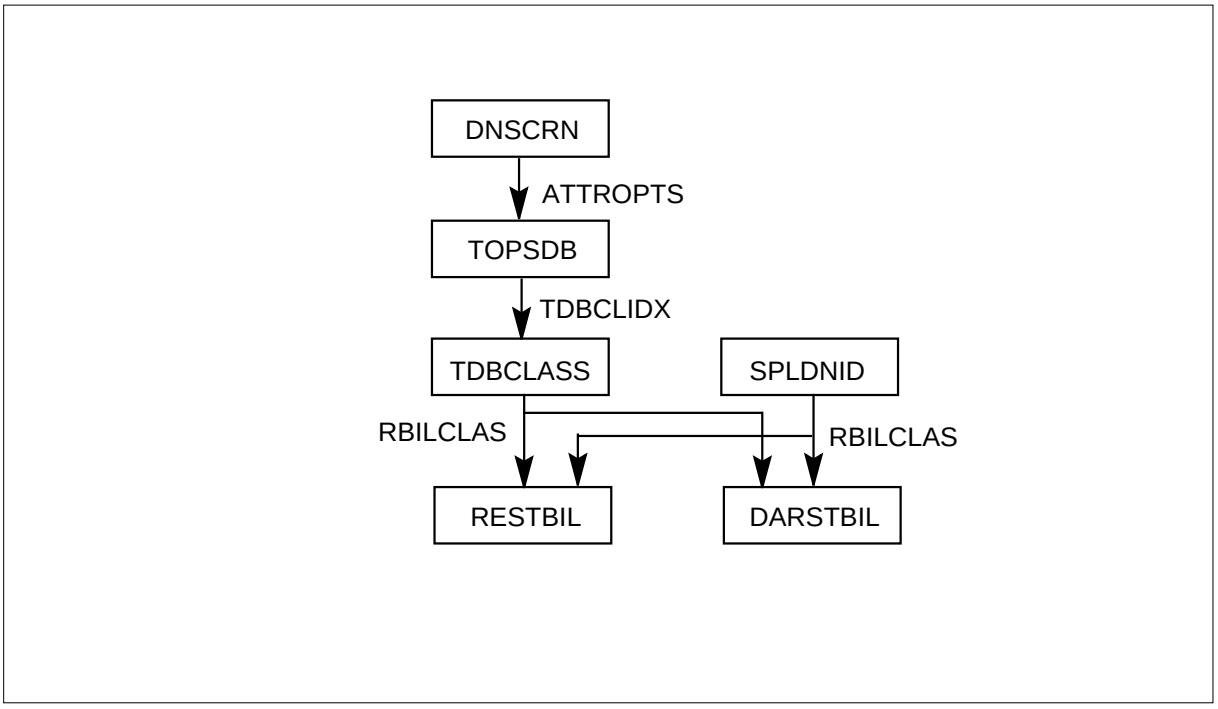

Limits

The TOPS DN Call Screening does not have limits.

Interactions

The TOPS DN Call Screening does not have functionality interactions.

Activation/deactivation by the end user

The TOPS DN Call Screening does not require activation or deactivation by the end user.

Billing

The TOPS DN Call Screening does not affect billing.

Station Message Detail Recording

The TOPS DN Call Screening does not affect Station Message Detail Recording.

Datafilling office parameters

The TOPS DN Call Screening does not affect office parameters.

TOPS DN Call Screening (continued)

Datafill sequence

The tables that require datafill to implement TOPS DN Call Screening appear in the following table. The tables appear in the correct entry order.

Datafill requirements for TOPS DN Call Screening

Table	Purpose of table
TDBCLASS	Restricted and special directory information
TOPSDB	Index into table TDBCLASS
DNSCRN	Assign attribute to DN

Datafilling table TDBCLASS

Datafill for TOPS DN Call Screening for table TDBCLASS appears in the following table. Fields that apply directly to TOPS DN Call Screening appear

in this table. See the data design section of this document for a description of the other fields.

Datafilling table TDBCLASS

Field	Subfield or refinement	Entry	Explanation and action
IDX		0-1000	Key to table. Table TOPSDB, field TDBCLIDX indexes this field. Table TDBCLASS includes the default tuple 0. Tuple 0 includes a key of 0 and data of NOSPLDNID N.
TDBCLSEL		NOSPLDNID AQTAC AQHTL DUAQTAC DUAQHTL VQHTL COIN RSTRCTD	Selector for service device. This field is the same field as table SPLDNID, field SEL. The following are valid values: • the NOSPLDNID - nil value • the AQTAC - auto-quote time and changes TTY (0-9999) • the AQHTL - auto-quote hotel TTY (0-9999) and NC (Y,N) • the DUAQTAC - dial-up auto-quote time and charge TTY (0-9999) • the DUAQHTL - dial-up auto-quote hotel TTY (0-9999) & NC (Y,N) • the VQHTL - voice-quote hotel TTY (N,Y) • the COIN - coin phone — the LC_TYPE (SPL,STD) — the ACT_COMPATIBLE (ACTS,NOACTS) — the RESCOIN (Y,N) — the RBILCLAS (0-100) • the RSTRCTD - restricted billing class (0-100) Refer to table SPLDNID, field SEL, for associated fields and values.
EAANI		Yor N	Change the ANI spill to carrier.

TOPS DN Call Screening (continued)

Datafilling table TDBCLASS

Field	Subfield or refinement	Entry	Explanation and action
If EAANI = Y, datafill field EAANIVAL.			
EAANIVAL		ANUSUCC ANIFAIL ONI HANISUCC HANIFAIL SPECIAL ALARM INTCPT MOBILE FGDCOIN ILRSREG ILRSHOT ILRSSPEC OPRHNDL	This field is the EAANI value. Index this field in table EAANIID.

Datafill example for table TDBCLASS

Sample datafill for table TDBCLASS appears in the following example.

MAP example for table TDBCLASS

```
 IDX    TDBCLSEL               EAANI   EAANIVAL
-------------------------------------------------
  0     NOSPLDNID                N
 16     RSTRCTD 6                Y     ANISUCC
 17     AQTAC 3                  N
 18     RSTRCTD 2                N
 19     COIN STD ACTS N 100      N
 29     COIN STD ACTS Y 2        N
```

Error messages for table TDBCLASS

Operating company personnel can attempt to delete a table TDBCLASS tuple that a tuple in table TOPSDB references. When this condition occurs, the system does not allow the delete. The following error message appears:

```
Tuple referred to by another table– use TABREF to get a
potential table list.
```

TOPS DN Call Screening (continued)

Operating company personnel can attempt to change or delete a default tuple 0. When this condition occurs, the system does not allow the change or deletion. The following error message appears:

```
Tuple 0 can not be deleted or changed.
```

Operating company personnel can attempt to add a tuple with selector = COIN, RESCOIN = N. If the RBILCLAS does not equal 100 (between 0 and 99), the system does not allow the add command. The following error message appears:

```
 Must use class 100.
```

Operating company personnel can attempt to add a tuple with selector = COIN, RESCOIN = Y, and RBILCLAS = 100. When this condition occurs, the system does not allow the add command. The following error message appears:

```
Cannot use class 100
```

Operating company personnel can attempt to add a tuple with selector = RSTRCTD and RBILCLAS = 100. When this condition occurs, the system does not allow the add command. The following error message appears:

```
Cannot use class 100
```

Enter table TDBCLASS with EAANI = N as non-equal access offices. These offices do not outpulse ANI to carriers. The system allows the add command when operating company personnel enter a tuple with EAANI = Y in a non-equal access office. The following warning message appears:

```
Warning:Selector EAANI should be N for non-equal access
offices
```

TOPS DN Call Screening (continued)

The system does not allow the add command when the following conditions occur:

- Operating company personnel attempt to add a tuple with selector = AQTAC or AQHTL.
- An autoquote number not entered in table TOPSDEV. The following error message appears:

```
Illegal aq number.
```

The system does not allow the odd command when the following conditions occur:

- Operating company personnel attempt to add a tuple with selector = AQTAC or AQHTL.
- An autoquote number is entered for a different type of device in table TOPSDEV. The following message appears:

```
Not an autoquote
```

Operating company personnel can attempt to add a tuple with selector = DUAQTAC or DUAQHTL. When an autoquote number is not entered in table HOBICDEV, the system does not allow the add command. The system gives an error message:

```
Illegal duaq number
```

Operating company personnel can attempt to add a tuple with selector = DUAQTAC or DUAQHTL. When an autoquote is entered for a different type of device in table HOBICDEV, the system does not allow the add command. The following error message appears:

```
Not a dial-up autoquote
```

Operating company personnel can attempt to add a tuple with selector EAANI = Y in a non-equal access office. When this condition occurs, the system does not allow the add command. The following warning message appears:

```
Selector EAANI should be N for non-equal access offices
```

Table FXDNMAP provides directory number replacement for numbers entered in table TDBCLASS. Warning messages do not appear for lost or invalid table FXDNMAP or TDBCLASS datafill. The system provides a TRK118 log.

Datafilling table TOPSDB

The TOPS DN Call Screening datafill for table TOPSDB appears in the following table. The fields that apply to TOPS DN Call Screening appear in this table. See the data design section of this document for a description of the other fields.

Datafilling table TOPSDB

Field	Subfield or refinement	Entry	Explanation and action
DNSCRIDX		0-32766	Index in table from table DNSCRN.
TDBCLIDX		0-1000	Index in table TOPSDB.

Datafill example for table TOPSDB

Sample datafill for table TOPSDB appears in the following example.

MAP example for table TOPSDB

```
DNSCRIDX          TDBCLIDX
_____________________________________________________________
    0                 0
   16                16
   17                17
   18                18
   19                19
   29                29
```

Error messages for table TOPSDB

Operating company personnel can attempt to add or change a table TOPSDB tuple with a TDBCLIDX. This attempt can occur before the addition of the tuple to table TDBCLASS. When these conditions occur, the system does not allow the add or change command. The following error message appears:

TOPS DN Call Screening (continued)

```
Tuple 44 is not datafilled in table TDBCLASS
```

Operating company personnel can attempt to delete a table TOPSDB tuple that a tuple in table DNSCRN references. When this condition occurs, the system does not allow the deletion. The following error message appears:

```
Tuple 29 is referenced by table DNSCRN
```

When operating company personnel attempt to change or delete default tuple 0, the system does not allow the change or deletion. The following message appears:

```
Tuple 0 can not be deleted or changed
```

When operating company personnel attempt to add or change a tuple that creates a duplicate tuple, the following warning message appears:

```
Warning: Duplicate tuple. This data is present in tuple 19
```

Datafilling table DNSCRN

The TOPS DN Call Screening datafill for table DNSCRN appears in the following table. The fields that apply to TOPS DN Call Screening appear in this table. See the data design section of this document for a description of the other fields.

Datafilling table DNSCRN

Field	Subfield or refinement	Entry	Explanation and action
DN		1-24 digits with digit range of 0-9	Directory number.
ATTROPTS		TOPSDB xx where: xx is 0-32766	Attribute options. Enter TOPSDB and an index in table TOPSDB.

Datafill example for table DNSCRN

Sample datafill for table DNSCRN appears in the following example.

MAP example for table DNSCRN

```
      DN       ATROPTS
_____________________________________________________________________
6193227000  (TOPSDB 17) $
6193228000  (TOPSDB 18) $
6193228001  (TOPSDB 18) $
6193229000  (TOPSDB 19) $
6193229001  (TOPSDB 29) $
```

Error messages for table DNSCRN

Operating company personnel attempt to add or change a table DNSCRN tuple with an attribute TOPSDB. This change occurs before the addition of the tuple to table TOPSDB, the system does not allow the add or change. The following error message appears:

```
Tuple 39 is not datafilled in table TOPSDB
```

Tools for verifying translations

The TOPS DN Call Screening does not use translation verification tools.

SERVORD

The TOPS DN Call Screening does not use SERVORD.

TOPS OLNS Interface

Ordering codes

Functional group ordering code: ABS00101

Functionality ordering code: not applicable

Release applicability

TOPS08 and later versions

The TOPS OLNS Interface was introduced in TOPS06.

Requirements

To operate, TOPS OLNS Interface has the following requirements:

- BAS Generic, BAS00003
- Operator Services Basic, OSB00101, and table TOPSFTR parameter TOPS_ON_OFF_SWITCH = Y
- Table TOPSFTR parameter ORIGINATING_LINE_NUMBER_SCREENING = Y

Description

The following features provide the TOPS OLNS Interface:

Features in functionality

Feature number	Feature name
AN1564	OLNS Protocol
AN1565	OLNS Screening and Routing
AN1566	OLNS TCAP and AMA Changes in TL
AN1567	OLNS AMA Changes in the CCM Layer
AN1788	AMA Re-engineering and OLNS Prep
AN1841	OLNS CI Tool
59006865	EOL Notification & EOL of TOPS ACD (TOPS12)

Originating Line Number Screening (OLNS) allows calling subscriber information to be stored in a Line Information Database (LIDB). Calling subscriber information is not stored in Digital Multiplex System (DMS) tables. The DMS switch accesses the information during call processing through a Transaction Capability Application Part (TCAP) query. The query occurs over

TOPS OLNS Interface (continued)

the Common Channel Signalling #7 (CCS7) network. The OLNS centralizes the directory number information to one database and provides a simple interface for data entry. This procedure reduces the administrative requirements and does not require the OLNS to maintain the data in multiple DMS switches. Also, OLNS allows removal of subscriber information from DMS tables. Before OLNS, this procedure required frequent updating.

Table TOPSPARM parameter OLNS_RESTRICTED_DACC is added to release TOPS08.

Operation

OLNS checks

Checks determine if OLNS can be provided for a call according to the following figure:

TOPS OLNS Interface (continued)

OLNS checks call flow

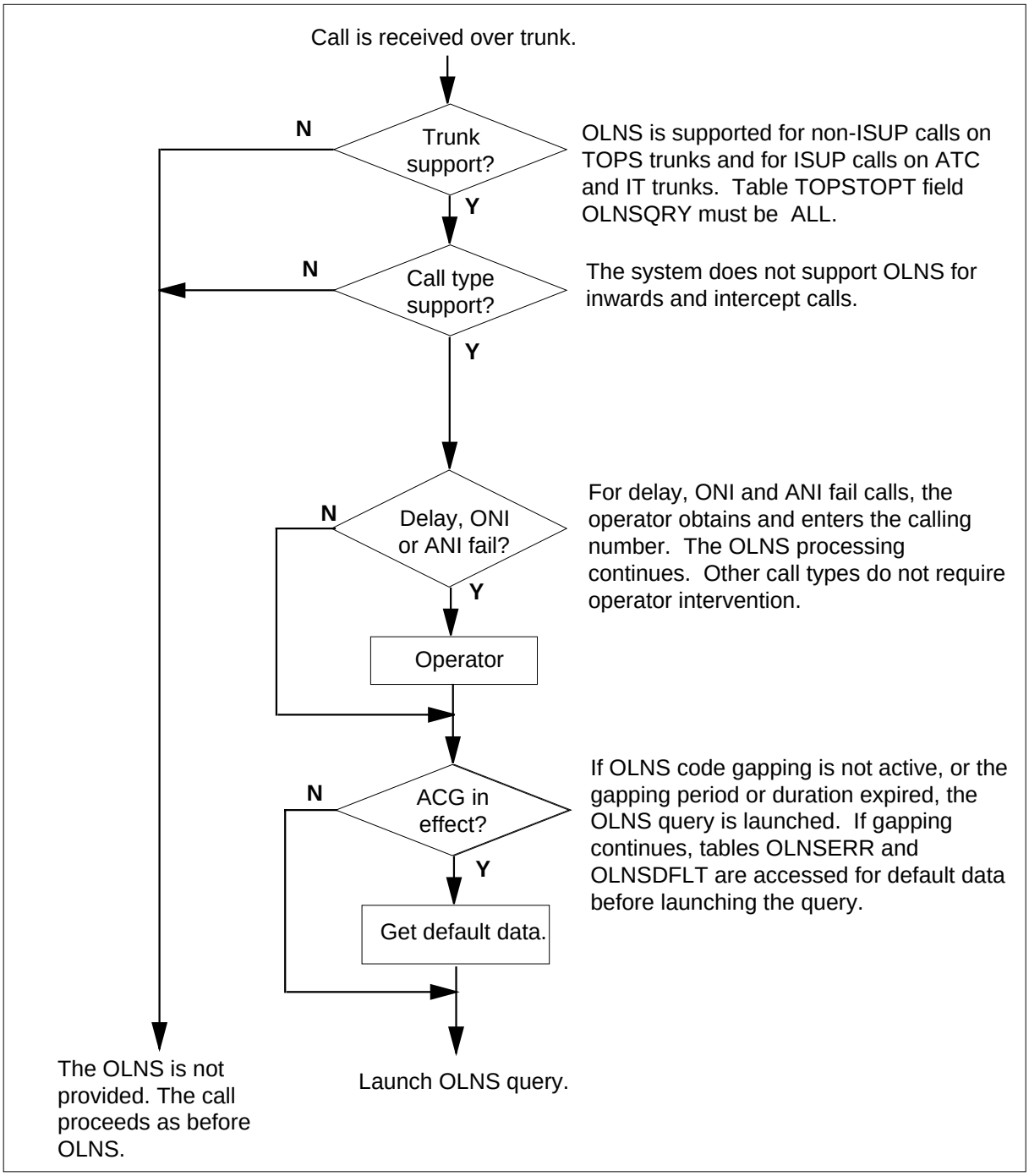

Non-Integrated Services Digital Network User Part (ISUP) calls on TOPS trunks support the OLNS. The ISUP calls on Access Tandem to Carrier (ATC)

TOPS OLNS Interface (continued)

and Intertoll (IT) trunks support the OLNS. When the value of field OLNSQRY in table TOPSTOPT is ALL, the trunk allows for OLNS.

The system checks the call type. The system does not support inwards and intercept calls. The system does not support these calls because the system does not signal the DMS switch. The system does not support other call types. For delay, ANI fail and ONI fail calls, the operator obtains the calling number before the operator proceeds in OLNS processing.

If the value of table TOPSTOPT field OLNSQRY is NONE, the trunk does not support OLNS.

When both the charge number and the calling number are signaled to TOPS, the charge number is used for the OLNS query. This condition applies only for ISUP trunks. For ISUP trunks, the charge number is the number to which the system bills the call. The charge number is the calling number on incoming TOPS trunks. For ISUP trunks, the calling number is the exact number of the calling party. The charge number and the calling party number can be the same or different. The charge number and the calling party can be different at a business. At a business, employees can have separate calling party numbers but billing for all the calls applies to one charge number.

The last check is automatic code gapping (ACG). The OLNS ACG reduces the number of OLNS queries when congestion occurs at the OLNS LIDB. When in overload, the LIDB returns a code gapping message. The message contains the following information:

- the first 6 digits of the calling number
- the period of time to wait between launch queries
- the period of time for network management.

If OLNS code gapping is not active or the gapping period or duration expires, the system launches the OLNS query. If OLNS code gapping is active for the call, the system accesses tables OLNSERR and OLNSDFLT for default data. This procedure occurs before the OLNS query occurs.

Datafill

The datafill procedure section provides table datafill information for the following changes:

- Current tables SPLDNID, DNSCRN, TOPSDB, TDBCLASS, RESTBILL, DARSTBIL, and DNPIC allow deletion of subscriber information. Subscriber information includes Inter-Local Area and

Transport Area (LATA) carrier, line billing limits, and calling party station type.

- The database now provides the coin line Automatic Coin Toll Service (ACTS) compatibility. Table RESTBIL does not provide ACTS compatibility.
- Screen displays
  - — The limited billing display for TOPS MP and OPP-compatible positions moves from tables RESTBIL and DARSTBIL to new table OLNSRSDP (OLNS Restricted Billing Display). This display is optional. When table OLNSRSDP does not contain data, table OLNSRSDPT does not appear.
  - — Table OLNSEQDP (OLNS Service/Equipment Display) provides service/equipment display. The display is optional. When table OLNSEQDP does not contain data, table OLNSEQDP does not appear.

  The OLNS database in the Alphanumeric String Indicator provides display information. The database determines the display message. There is no datafill for this display.
- The restricted billing index moves from tables SPLDNID [directory number (DN)-basis] and TDBCLASS. Tables OLNSTARS (OLNS Toll and Assist Billing Restriction) and OLNSDARS (OLNS Directory Assistance Billing Restriction) now provide the restricted billing index.
- Table TOPSPARM introduces parameters OLNS_EAANI_DACC and OLNS_EAANI_ADD_BILSRV for Automatic Number Identification (ANI) spill. Table OLNS_TIMEOUT introduces parameter OLNS_TIMEOUT for protocol message timeout. Table TOPAMAOP introduces parameter Automatic Message Accounting (AMA) parameter RECORD_ORIG_BILLING_SERVICE.
- Table TOPSTOPT includes field OLNSQRY to activate OLNS foe each trunk group. The field values are NONE and ALL. When set to NONE, the system does not launch queries for the trunk group. When set to ALL, the system queries occur for all 0+/0- call types except intercept and inwards calls. The OLNS applies to 1+ call types that the switch routes to the Traffic Operator Position System (TOPS). Examples of the call types are coin, hotel and directory assistance (DA). The OLNS supports non-ISUP calls on incoming TOPS trunks and ISUP calls on incoming ATC or IT trunks.
- The addition of parameter CRS_SUBRU_POOL5_SIZE in table OFCENG occurs to allow provisioning of the new SUBRU pool. This change occurs because the TOPS XRU is full. This new pool provides

TOPS OLNS Interface (continued)

extension blocks that are 50% larger than the previous extension blocks (CRS_SUBRU_POOL4).

Before OLNS, TOPS billing used extension blocks from the CRS_SUBRU_POOL4 pool. The CRS_SUBRU_POOL4_SIZE parameter allocated the extension blocks. With the introduction of OLNS, all TOPS offices, with or without OLNS, use extension blocks from the CRS_SUBRU_POOL5 pool. The CRS_SUBRU_POOL5 pool allocates the CRS_SUBRU_POOL5_SIZE parameter.

- Protocol requires the following changes:
  - — New tables OLNS Error (OLNSERR) and OLNS Default (OLNSDFLT) can process OLNS errors.
  - — Current CCS7 tables C7GTT, C7GTTYPE, C7LOCSSN, C7NETSSN, and C7RPLSSN now allow OLNS as a translations name and route list.

Table flow before OLNS and with OLNS appear in the following two figures.

Pre-OLNS call processing table flow

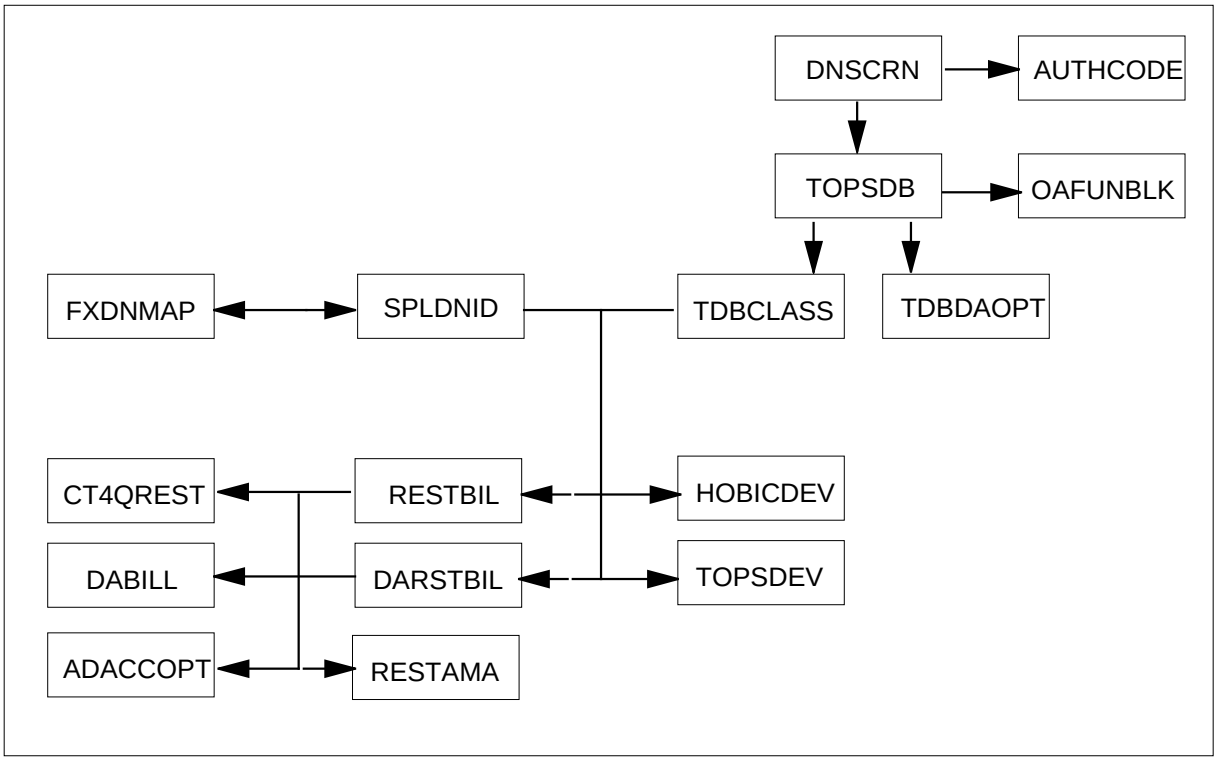

TOPS OLNS Interface (continued)

OLNS call processing and protocol table flow

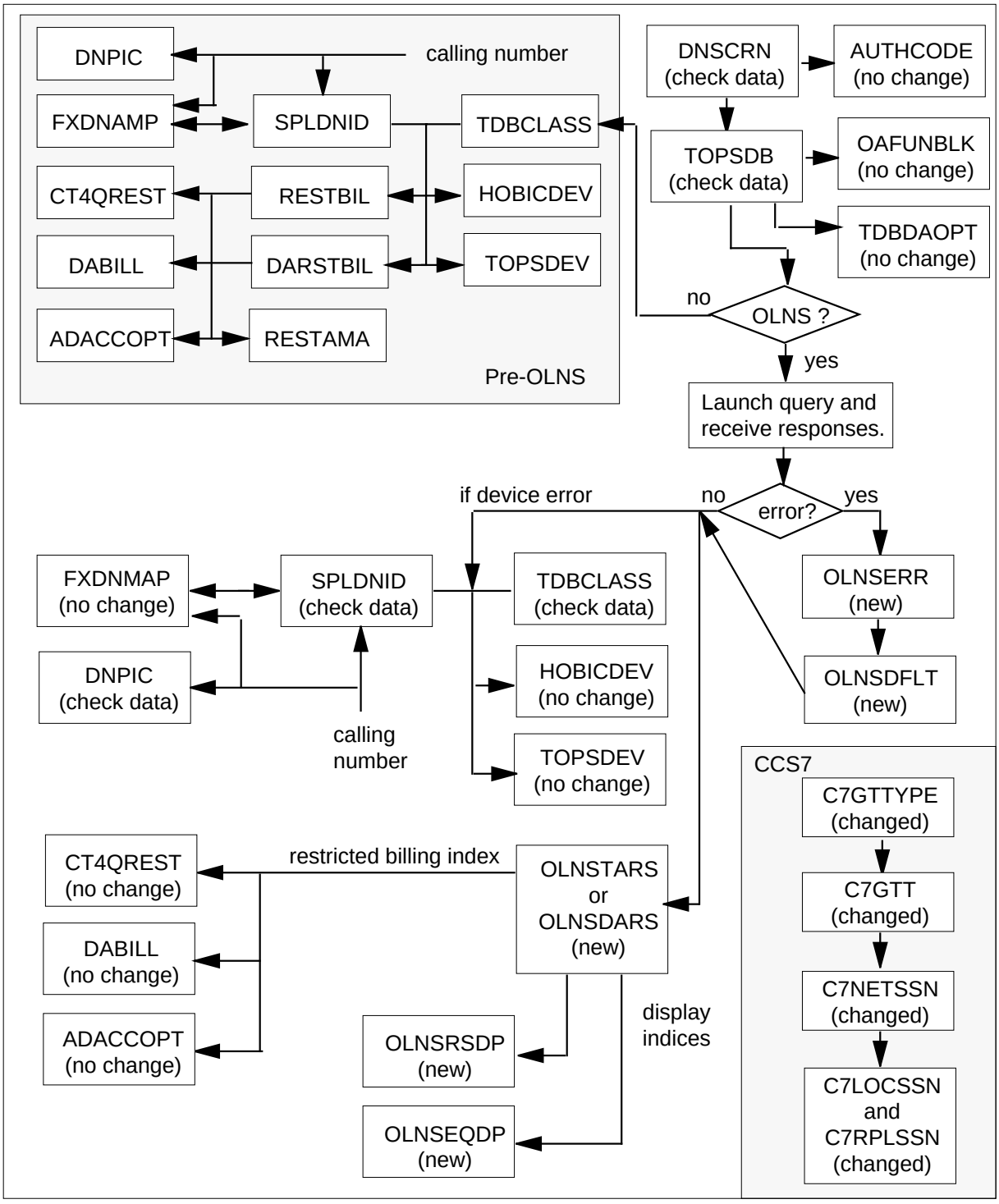

TOPS OLNS Interface (continued)

The above figure with OLNS describes the tables with data changes that OLNS causes. Tables with no change do not change. Tables with check data can require data removal. The datafill procedure section contains removal information.

Datafill examples

This section provides datafill examples for different call conditions. Refer to the datafill procedure section for more information on these tables.

Example 1: OLNS on ALL trunks

A 0+ call arrives on incoming TOPS trunk TRK11. The calling number is 919-222-2345. The called number is 212-333-3456. BELL signalling signals the call.

The system checks ACG for OLNS for the calling NPANXX. Network management is not active. The system launches an OLNS query for this call before the call arrives at the operator position. Call processing uses the returned information for table TOPSSTOPT. Sample data fill appears in the following example.

MAP example for table TOPSTOPT

```
GRPKEY ACDDATA          DISPLCLG  ADASERV  ADASANS  ANITOCLI  OLNSQRY
                                                             DCIBIDX
-------------------------------------------------------------------
TRK11  QMSCAM CORECAM N   Y        NONE     NA       N         ALL
                                                             0
```

Example 2: OLNS with ACG in effect

A 0- call arrives on incoming TOPS trunk TRK12. The TRK12 in table TOPSTOPT attempts to launch a query for every call. The calling number is 307-444-4567. The system signalls the call with Equal Access Operator Services Signaling (EAOSS) with an ANI ID = 00.

When the system checks network management software, the check determines that ACG is active for the calling NPANXX (307444). The ACG is active because congestion occurs at the OLNS LIDB. The system does not launch the query. Call processing uses default data.

Access to table OLNSERR requires two two pieces of information. The tuple key contains an error reason of ACG and a call type of STATION. The call type STATION contains data against key 0 in table OSSCAT. The data in table OLNSERR is an index to table OLNSDFLT that contains the data for the call. Sample datafill appears in the following examples.

MAP example for table OSSCAT

```
ANI    FORMAT    CLGSERV    REST     ROUTE
-------------------------------------------------------
0      ANI       STATION    NONE     Y TOPS 6
```

MAP example for table TOPSTOPT

```
GRPKEY ACDDATA          DISPLCLG  ADASERV  ADASANS  ANITOCLI  OLNSQRY
                                                               DCIBIDX
-------------------------------------------------------------------------
TRK12  QMSCAM CORECAM N   Y        NONE     NA       N         ALL
                                                               0
```

MAP example for table OLNSERR

```
KEY           DFLTIDX
-------------------------------------------------------
ACG STATION   1
```

MAP example for table OLNSDFLT

```
IDX  TRTMT  SERVEQP  TASENTPD  TACOLL  TATHIRD  TACCARD  TABNS
DACC   DASENTPD  DATHIRD  DACCARD  DABNS
-------------------------------------------------------------------
1    TN2    POTS1   ALLOW     ALLOW   ALLOW     ALLOW    ALLOW
ALLOW  ALLOW     ALLOW    ALLOW    ALLOW
```

Example 3: OLNS with timeout on incoming ISUP trunk

A 0+ call arrives on incoming ISUP ATC trunk TRK13. The ISUP Initial Address Message (IAM) contains the following information:

- the Originating Line Information (OLI) Parameter of 7
- the Calling Party Number (CLI) Parameter of 919-444-4567
- the Charge Number Parameter of 919-444-4568
- the Called Party Number Parameter of 512-666-6789

Note: Note that for ISUP trunks, the charge number is the number to which the system bills the call. The charge number is the calling number on incoming TOPS trunks. For ISUP trunks, the calling number is the accurate number of the calling party. The charge number and the calling

TOPS OLNS Interface (continued)

party number can be the same or different. One example in which these two numbers differ is at a business. At a business, employees can have separate calling party numbers. Billing for all the calls applies to one charge number. This ISUP to TOPS functionality (OSEA 0005) is new in TOP05.

The system begins an OLNS query for the call. An OLNS response does not arrive from the database in the timeout period of 2 s. Call processing does not use default data based on the error type of TIMEOUT and the incoming call type of SPECIAL. Sample datafill appears in the following tables.

MAP example for table OSSCAT

```
ANI   FORMAT   CLGSERV   REST   ROUTE
-------------------------------------------------------
7     ANI      SPECIAL    NONE  Y TOPS 4
```

MAP example for table TOPSTOPT

```
GRPKEY ACDDATA   DISPLCLG  ADASERV  ADASANS  ANITOCLI  OLNSQRY DCIBIDX

-------------------------------------------------------------------
TRK13  TOPSACD    Y         NONE     NA       N         ALL     0
```

MAP example for table TOPSPARM

```
PARMNAME                                          PARMVAL
-------------------------------------------------------
OLNS_TIMEOUT                                      2
```

MAP example for table OLNSERR

```
KEY               DFLTIDX
-------------------------------------------------------
TIMEOUT SPECIAL   3
```

MAP example for table OLNSDFLT

```
IDX  TRTMT   SERVEQP  TASENTPD  TACOLL  TATHIRD   TACCARD  TABNS
DACC   DASENTPD  DATHIRD  DACCARD  DABNS
-------------------------------------------------------------------
3    TONEP2  POTS1    DISALL    ALLOW   ALLOW     ALLOW    ALLOW
ALLOW  ALLOW     ALLOW    ALLOW    ALLOW
```

Example 4: OLNS with invalid data

A 0+ hotel call arrives that uses BELL signalling on incoming TOPS trunk TRK14. Trunk TRK14 in table TOPSTOPT contains datafill to launch queries for all calls. The system signals the call with ANI = 6. The ANI = 6 appears as HOTEL in table BELLCAT.

The OLNS checks for network management for the calling NPANXX. Congestion does not occur at the OLNS LIDB. The system launches the OLNS query. The OLNS response message returns with the indicators filled.

The DMS switch parses the OLNS response message. The DMS determines that the OLNS LIBD sends a value for toll and assist (TA) collect billing that is not correct. The OLNS LIDB returns a value of Allow for Domestic. The system supports Allow, Disallow, and Screened data. The value of Allow for Domestic is not supported value, and is a data error. The DMS checks tables OLNSERR and OLNSDFLT for the data value in use for the billing limits in call processing. Tuple 2 in table OLNSDFLT indicates TA collect billing is allowed (A) for this call. Sample datafill appears in the following tables.

MAP example for table BELLCAT

```
ID   FORMAT   CLGSERV   ANIROUTE
-----------------------------------------------------
6     ANI      HOTEL     N
```

MAP example for table TOPSTOPT

```
GRPKEY ACDDATA          DISPLCLG  ADASERV  ADASANS  ANITOCLI  OLNSQRY
                                                              DCIBIDX
-------------------------------------------------------------------
TRK14  QMSCAM CORECAM N   Y        NONE     NA       N          ALL
                                                             0
```

TOPS OLNS Interface (continued)

MAP example for table OLNSERR

```
KEY              DFLTIDX
-------------------------------------------------------
DATAERR HOTEL    0
```

MAP example for table OLNSDFLT

```
IDX  TRTMT   SERVEQP  TASENTPD  TACOLL  TATHIRD   TACCARD  TABNS
DACC   DASENTPD  DATHIRD  DACCARD  DABNS
-----------------------------------------------------------------
0    TONEP2  POTS1    ALLOW     ALLOW   ALLOW     ALLOW    ALLOW
ALLOW  ALLOW     ALLOW    ALLOW    ALLOW
```

Example 5: OLNS on ANIF call

An ANI failure (ANIF) call arrives at a TOPS position over a TOPS trunk TRK15. The operator determines that a calling number is not present and requests this information from the subscriber. The operator keys in the calling number and enters start. This procedure starts the OLNS query launch logic.

The system checks network management for the calling NPANXX. Congestion is not present at the OLNS LIDB. The system launches the OLNS query and the OLNS response message returns. Call processing uses data from the OLNS response message. Sample datafill appears in the following example.

MAP example for table TOPSTOPT

```
GRPKEY ACDDATA          DISPLCLG  ADASERV  ADASANS  ANITOCLI  OLNSQRY
                                                             DCIBIDX
-----------------------------------------------------------------------
TRK15  QMSCAM CORECAM N   Y        NONE     NA       N          ALL
                                                             0
```

OLNS response message

Operator Services System Generic Requirements (OSSGR) define the following OLNS response message parameters. Call processing uses these parameters. These parameters index tables OLNSTARS and OLNSDARS:

- Originating Billing Service Indicator. This indicator provides the billing limits for the call. Before this parameter, table RESTBIL provided this information. This indicator contains the following indicators:
  - — Originating Collect Billing Indicator - This is the same as the pre-OLNS billing type COLLECT. This indicator does not apply to directory assistance calls. This indicator is field COLLECT in table OLNSTARS.
  - — Originating Third Number Billing Indicator - This is the same as the pre-OLNS billing types THIRD and SPLCLG. This indicator is field THIRD in tables OLNSTARS and OLNSDARS.
  - — Originating Credit Card Indicator - This indicator is the same as the pre-OLNS billing type CALLING CARD. This indicator is field CCARD in tables OLNSTARS and OLNSDARS.
  - — Originating Special BNS Indicator - This indicator is the same as the pre-OLNS billing type SPLCLD. This indicator is field SPLBNS in tables OLNSTARS and OLNSDARS.
  - — Originating Sent-Paid Indicator - This indicator is the same as the pre-OLNS billing type SENT PAID. This indicator is field SENTPD in tables OLNSTARS and OLNSDARS.
  - — Originating DACC Indicator - This indicator replaces field CCPDTYPS in table RESTBIL. Tables DATRKOPT and TDBDAOPT use this indicator. This indicator determines when the line allows directory assistance call completion (DACC). This indicator is field DACC in table OLNSTARS.
- InterLATA Carrier Indicator and InterLATA Carrier Number. This is the primary interLATA carrier for the line. Before this parameter, table DNPIC or trunk group datafill held this information.
- Originating Service/Equipment Indicator. This indicator provides the calling station type. This indicator determines the calling service feature of the line that relates to the billing indicators.
- Alphanumeric String. This indicator provides an 8-character operator screen display. There is no datafill associated with this display.

TOPS OLNS Interface (continued)

- Additional Originating Billing/Service Indicator. This indicator provides billing limits for DA calls. Before this parameter, table DARSTBIL held this information.
- Treatment Indicator. This indicator is the treatment associated with the line. This value indexes table OLNSTARS or OLNSDARS as field TRMT to obtain the screen code and operator display indexes.

Activation

The OLNS is an option. Software Optionality Control (SOC) controls the OLNS option. Perform the following two steps to activate OLNS:

1. Turn the OLNS_Base SOC option ON. This procedure provides OLNS to the complete office. The SOC Utility provides two types of control:
   - State control: The option state can be ON or IDLE. The ON state provides functionality. The IDLE state does not provide functionality. The IDLE state does allow and retain data entry.
   - Control depends on use. This functionality supports state control. This functionality does not support SOC Usage control.

   For information on how to use SOC, refer to the *Software Optionality Control User's Manual*, 297-8991-901.
2. Activate incoming TOPS, ATC (ISUP), or IT (ISUP) trunks in table TOPSTOPT.

Call processing

This section describes the call processing functions that OLNS uses.

ACTS compatibility and AMA rating

Before OLNS, the system checks the state of trunk ACTS in table TOPSACTS field ACTSSERV for MAYSERV. When present, table SPLDNID/TDBCLASS indicates ACTS status of the DN. Tables DNSCRN/TOPSDB/TDBCLASS indicates ACTS compatibility of coin lines (field ACTS_COMPATIBLE). These tables indicate the type of rating (field LC_TYPE) for the DN. With OLNS, the database Service/Equipment Indicator provides this information. The OLNS assumes that all lines are ACTS compatible and use standard rating. When a line is not ACTS compatible, the OLNS database returns the following value:

37 - Public - Incompatible Network Interface (value INCMPIF in field SRVEQPT of tables OLNSTARS and OLNSDARS)

Special rating requirements appear as SPL in LC_TYPE field of table SPLDNID/TDBCLASS. When the line has special rating requirements, the

OLNS database returns one of the following values according to Bellcore standards:

- 35 - LEC Public - Special Billing - Post-Pay Overtime (value SPLPOST in field SRVEQPT of tables OLNSTARS and OLNSDARS)
- 36 - LEC Public - Special Billing - Pre-Pay Overtime (value SPLPRE in field SRVEQPT of tables OLNSTARS and OLNSDARS)

The non-ACTS and special rating combination is not possible because the indicators cannot be present together.

Call completion checks

Before OLNS, data in tables indicated the type of call completion and when the office allowed call completion. Tables DABILL, DATRKOPT, ADACCOPT, and TDBDAOPT contained the required data. For cellular calls, table ADACC contained the information. Table VROPT parameter, DACC_LOCAL_TOLL_ACTIVATION, controlled when the office allowed office completion.

The OLNS uses the earlier call completion checks and the new OLNS call completion checks.

The DMS switch checks call completion according to the following steps:

1. Allowed for line? Check the DACC Indicator. Field DACC in table OLNSTARS can use this indicator.
2. Allowed for the call type/service type combination and for the trunk group? Check tables DABILL and DATRKOPT.
3. Station paid billing allowed for the office? Check parameter DACC_LOCAL_TOLL_ACTIVATION in table VROPT.
4. Third number billing allowed for office? Check parameter DA_BILL_TO_THIRD in table VROPT.
5. Billing limits for the area? Check table DOMBIL.
6. Selected billing method is correct for line? Check the Originating Billing Service Indicator. Fields COLLECT, THIRD, CCARD, SPLBNS, SENTPD, and DACC in tables OLNSTARS and OLNSDARS can use this indicator.

Spilling ANI ID to carrier on interLATA calls

The OLNS does not provide EAANI functionality in table TDBCLASS. The ANI ID digit to spill to the carrier on carrier calls depends on new Bellcore requirements. These requirements state that the system checks for incoming calls with ANI ID of 0 or 7. These calls include the Originating

TOPS OLNS Interface (continued)

Billing/Service Parameter, the DACC indicator in the Originating Billing/Service parameter. These calls can include or use the Additional Originating Billing/Service Parameter. This process determines the ANI ID to spill to the carrier. The indicators checked must be an option. Parameter datafill determines this optionality.

The system always checks Originating Billing/Service Parameter. The system checks the DACC indicator and Additional Originating Billing/Service parameter when the following parameters in table TOPSPARM are Y:

- OLNS_EAANI_DACC
- OLNS_EAANI_ADD_BILLSRV

The rules to spill ANI ID to the carrier follow:

1. Spill ANI ID = 0 when all of the following Originating Billing/Service Indicators indicate that the line does not have limits. Tables OLNSTARS and OLNSDARS can use these indicators.
   - Originating Collect Billing Indicator = allowed from this line (input to field COLLECT = ALLOW)
   - Originating Third Number Billing Indicator = allowed from this line (input to field THIRD = ALLOW)
   - Originating Credit Card Billing Indicator is one of the following :
     — allowed from this line (input to field CCARD = ALLOW)
     — card issuer limits associated with this line for local calls (input to CCARD = CIRLCL)
     — card issuer limits associated with this line for intraLATA, non-local calls (input to CCARD = NDCIRIA)
     — card issuer limits associated with this line (input to field CCARD = CIR)
   - Originating Special BNS Indicator = allowed from this line (input to field SPLBNS = ALLOW)
   - Originating Sent Paid Indicator = allowed from this line (input to field SENTPD = ALLOW)

   In all other conditions, spill ANI ID = 7.
2. When the value of parameter OLNS_EAANI_DACC is Y, include the DACC indicator in the check. When the Originating DACC Indicator =

allowed from this line, and all of the rule 1 indicators are allowed, spill 0. For other conditions, spill 7.

3. Check that the value of parameter OLNS_EAANI_ADD_BILLSRV is Y. The value is Y and the conditions of rules 1 and 2 can be present. When this event occurs, include the Additional Originating Billing Services Indicator in the check. Spill ANI ID = 0 when all of the following are correct:

   - Additional Originating Third Number Billing Indicator = allowed from this line (input to field THIRD = ALLOW)
   - Additional Originating Credit Card Billing Indicator = allowed from this line (input to field CCARD = ALLOW)
   - Additional Originating Sent Paid Indicator = allowed from this line (input to field SENTPD = ALLOW)

   For other conditions, spill ANI ID = 7. The Additional Originating Special BNS Indicator is not included. The Additional Orginating Special BNS Indicator does not affect the value of the ANI ID digits spilled to the carrier.

InterLATA carrier

Before OLNS, table DNPIC or table TOPEATRK determined the InterLATA carrier for the line. Table TOPEATRK determined the InterLATA when carrier signaling was not present. When field DNLOOK in TOPEATRK contained Y, table DNPIC obtained the carrier. When DNLOOK contained N and DFLTPIC contained Y, the trunk group in table TOPEATRK provided the carrier. When table DNPIC did not have an entry, the trunk group in table TOPEATRK provided the carrier. When table DNPIC did not have an entry, the system routed to the operator to obtain a carrier.

With OLNS, the carrier returns in the InterLATA Carrier Indicator parameter. The DMS switch uses the carrier in the following conditions:

1. When the system signals the carrier digits, use the signaled carrier. Use the signaled IC when the OLNS database returns an IC.
2. When the OLNS does not signal and the OLNS returns an IC, check field DNLOOK in table TOPEATRK. When field DNLOOK is set to Y, use the IC that the database returns. For other conditions, use the default for the trunk. The default is field CARRIER in table TOPEATRK. If a carrier is not available, route to the operator to obtain a carrier.

   The carrier that the OLNS database returns must be a correct carrier entry in table TOPEACAR. A carrier not entered in TOPEACAR is not correct.

TOPS OLNS Interface (continued)

An carrier that is not correct causes the system to generate a TOPS127 log. This log indicates an invalid carrier number.

3. When the IC is not signaled and the OLNS database does not return an IC for the line, use the default IC. Use the default IC for the trunk group field when DFLTPIC = Y. The default IC is field carrier from table TOPEAK. In all other conditions, the operator must enter the carrier.

Coin lines

Before OLNS, table SPLDNID or TDBCLASS determined when a line was coin. This check occurred when the call was on a combined trunk signaled with ANI ID = 7. This check occurred when the call was on a trunk entered in table TRKGRP with field STATCLAS. In this condition, field STATCLAS was set to RESTBIL or DNLOOKUP.

With OLNS, the OLNS database returns the Service/Equipment Indicator to indicate coin lines. This check is for calls on a combined trunk and signaled with ANI ID = 7. The check occurs on calls entered in table TRKGRP with RESTBIL or DNLOOKUP. The Service/Equipment Indicator is field SRVEQPT in tables OLNSTARS and OLNSDARS. The Service/Equipment Indicator indicates coin for one of the following:

- 002 - LEC Public - Standard Interface - Postpay Overtime
- 005 - LEC Semi-public
- 012 - LEC Public - Standard Interface - Prepay Overtime
- 014 - IC Public - Standard Interface
- 019 - IPP - Standard Interface
- 028 - Prison IPP
- 035 - LEC Public - Special Billing - Postpay Overtime
- 036 - LEC Public - Special Billing - Prepay Overtime
- 037 - Public - Incompatible Network Interface
- 042 - Public - Postpay

Restricted lines

Before OLNS, the entry of a line as restricted in SPLDNID or TDBCLASS marked the line restricted. A call signaled with an ANI ID of 7/07 on a combined trunk triggered a check of tables. The check occurs for tables SPLDNID or TDBCLASS. A trunk entered in table TRKGRP with field STATCLAS triggered a check of tables SPLDNID or TDBCLASS. In this condition, the value of field STATCLAS was RESTBIL or DNLOOKUP.

TOPS OLNS Interface (continued)

With OLNS, billing indicators determine a restricted line. The Originating Billing Services Indicator Parameter and the Additional Originating Billing Services Indicator Parameter contain the billing indicators. The trigger for this comparison does not change from before OLNS. A call signaled with an ANI ID of 7/07 on a combined trunk triggers the check. The check can occur when the call is incoming on a trunk entered in table TRKGRP with field STATCLAS. The value of field STATCLAS is RESTBIL or DNLOOKUP.

For TA and DA calls, the system checks billing indicators for ALLOWED according to table TOPSPARM parameter OLNS_RESTRICTED_DACC. When the value of this parameter is Y, the OLNS checks calling indicators. When the value of this parameter is N, the OLNS checks all calling indicators except the originating DACC. When the value of an indictor is other than ALLOWED, the line is restricted. Examples of billing options for restricted lines follow.

The possible TA billing options follow:

- sent paid
- collect
- calling card
- third number
- special calling BNS
- special called

The possible DA billing options follow:

- sent paid
- calling card
- third number
- special calling BNS
- special called
- calling DACC

TOPS OLNS Interface (continued)

Assume that the calling number has the following parameter entered against the number in the OLNS database and OLNS_RESTRICTED_DACC = Y:

- Originating Billing Services Indicator Parameter
  - — Originating Credit Card Indicator: ALLOWED
  - — Originating Third Number Indicator: ALLOWED (this indicator determines the special calling billing type)
  - — Originating Collect Indicator: ALLOWED
  - — Originating Special BNS Indicator: ALLOWED
  - — Originating Sent Paid Indicator: NOT ALLOWED
  - — Originating DACC Indicator: ALLOWED
- Additional Originating Billing Services Indicator Parameters:
  - — Originating Third Number Indicator: ALLOWED (this indicator determines the special calling billing type)
  - — Originating Credit Card Indicator: ALLOWED
  - — Originating Special BNS Indicator: ALLOWED
  - — Originating Sent-Paid Indicator: NOT ALLOWED

In the above example, the calling number is restricted because the Originating Sent Paid Indicator is NOT ALLOWED. The system does not support the following:

- Originating Local
- Non-toll Call Indicator
- Originating Free DA Indicators
- Originating Billing Service Spare Indicator

This OLNS method to determine line restriction is the same as the method in use before OLNS that checked table SPLDNID/TDBCLASS. With OLNS, when the system can signal the call with an ANI ID of 7 and billing limits do not apply. In this event, the operator receives the call as an ANI Fail call. The STATCLASS and SIGTYPE of the trunk group determine the display that appears to the operator.

The OLNS moves the restricted billing index from tables SPLDNID and TDBCLASS to tables OLNSTARS and OLNSDARS. Tables SPLDNID and TDBCLASS assigned the index to each DN. For restricted lines, the new

tables must contain a restricted index. This condition occurs because the line restriction applies to call types, TA and DA.

Note: Some protocols use the AMABRC value instead of the restricted billing number. Note that the AMABRC value is not present in OLNS. In these events, the derived restricted billing index from table OLNSTARS or OLNSDARS is in use. This affects AABS and OSSAIN.

The restricted billing index can index tables like CT4QREST, DABILL, and ADACCOPT. The AABS node, PARS, OSSAIN, and other automated systems that use the restricted billing index* receive this restricted billing index.

In QMS, table CT4QREST can perform queue refinement on the restricted billing index. The OLNS performs this procedure on the restricted billing index. The index is from OLSNTARS. This condition occurs because the service type of the call (TASERV or DASERV) determines the index for table OLNSTARS or OLNSDARS. With QMS, the service type of the call is known when CT4Q refinement completes, and a final CT4Q is available. The service type indexes TQMSSERV to determine the base service of the call. This procedures occurs late in the OLNS. In this condition, OLNS uses the default service type TASERV. The call can route to the correct CT4Q because the system can check the call origination and the restricted billing index. To enter data in table CT4QREST, the restricted billing index in use for DA calls is in table OLNSTARS and not OLNSDARS. When the system determines the service type of the call, the system accesses the table for the restricted billing index.

Operator screen displays

The restricted billing screen display moves from tables RESTBIL and DARSTBIL to tables OLNSRSDP and OLNSEQDP. These displays are optional. The displays do not appear when the tables do not have datafill. Tables OLNSTARS and OLNSDARS provide indexes to tables OLNSEQDP and OLNSRSDP.

The OLNS database returns an alphanumeric string. When OLNS does not return a string, a string does not appear.

Before OLNS, restricted types of displays appeared for calls marked restricted. With OLNS, an option displays all call types. The index in table OLNSTARS and OLNSDARS depends on the equipment, billing limits and treatment associated with the line. The index to these tables does not depend on the accurate directory number. Correct datafill provides correct displays.

TOPS OLNS Interface (continued)

The OLNS displays do not apply to CAMA calls. A CAMA call is an 1+ direct dialed calls that goes to the operator to collect the 7-digit calling number.

Hotel lines

Hotel lines must remain entered in SPLDNID or TDBCLASS. The OLNS protocol does not provide similar data that allows movement of the lines. For hotel lines, the OLNS database must contain data for one of the following service/equipment types:

- Voice Quote - No tax
- Voice Quote - Tax
- Auto Quote - No Tax
- Auto Quote - Tax

The service/equipment type of the line triggers the SPLDNID/TDBCLASS check. A hotel line must have one of the above service/equipment types. When a hotel line does not have one the these types, the system does not check table SPLDNID or TDBCLASS. When this condition occurs, the hotel records are not correct. Hotel records depend on data in SPLDNID/TDBCLASS check. This check provides the device number and other information.

Note: With OLNS, table OLNSEQDP can provide a custom Hotel display. When the the current display is necessary, do not enter table OLNSTARS or OLNSDARS. Do not enter nil values (100) in the appropriate fields.

Call processing exceptions

The OLNS does not affect the following current functionality:

- In tables FXDNMAP and SPLDNID that use FX numbers, the SPLDNID datafill must remain. Table FXDNMAP cannot contain data unless the DN is in table SPLDNID.
- The OLNS does not affect tables HOBICDEV and TOPSDEV. Datafill in tables SPLDNID and TDBCLASS that relate to devices must remain.
- The OLNS does not support the new operator screen displays from table OLNSRSDP or the Alphanumeric String for TOPS IV. Calls that receive OLNS service can route to a TOPS IV position. New displays that associate with OLNS calls do not appear. The display that appears in the area that the billing restriction display uses does appear. The display from table OLNSEQDP appears in the same area that the display in use from table RESTBIL/DARSTBIL before OLNS.
- The OLNS call cannot use the EAANI functionality that feature AN0324 in TOPS DN call Screening (ABS00007) introduced.

- When the ISUP-to-TOPS (OSEA0005) functionality use the BLKCLI field in table TDBCLASS, the tuple must remain in table TDBCLASS. For this condition to occur, the BLKCLI field must be Y (Yes). The DN in table DNSCRN and the index in TOPSDB provides the index to TDBCLASS.
- The OLNS changes the method to obtain a restricted billing index. Before OLNS, the DN determines the restricted billing index enters according to each DN. With OLNS, the service/equipment indicator, the billing restrictions. The treatment indicator of the line determines the restricted billing index.

Upgrade strategy

Coordinate the software activation of the new indicators until the DMS switch and the OLNS LIDB receive upgrades. Functionality of the indicators does not change before the upgrades occur.

LOGS

The changes for LOGS follow:

- The OLNS modifies the TCAP 199 log. A new error message string indicates different TCAP errors. The system generates this log when the OLNS application attempts to obtain a transaction ID that is not available.
- The system generates an AUD 606 log when a call traps or dies while the system holds an OLNS TCAP extension block.
- The system generates an AUD615 log when an error occurs in the AMA process. The AMA use extension blocks for the CRS_SUBRU_POOL5.
- The system generates a new AUD611 log when a call traps while the system holds an OLNS TCAP extension block.
- The OLNS modifies the current TCAP100 log. The OLNS responses that contain return error or reject parts appear in this log. The New text strings are added for the OLNS application.
- The OLNS current modifies TCAP101 log. The OLNS responses use log when routing failure occurs. The OLNS application uses a new text string.
- The OLNS modifies the current TCAP199 log. Different TCAP errors use this log. The OLNS errors use a new text string.
- The system generates a new TOPS127 log. This log indicates different OLNS errors. This log contains the calling number, originating trunk and an error message. The log can contain the carrier number.

TOPS OLNS Interface (continued)

Operational Measurements (OMs)

The changes for OMs are as follows:

- The TOPPDID5 OM group have two new registers. These registers are OLNSIND and OLNSIND2 (extension register). The registers increase when an OLNS_INFORMATION_DID transmits to the Open Position Protocol (OPP) positions.
- The EXT OM group now supports the addition of OLNS_TCAP_ EXT_BLK to key EXT_FORMAT_CODE.
- The EXT OM group includes a new index to the key field for the new extension block definition. This index monitors the use of the new extension blocks.
- The OLNS includes the new OM groups TOPSOLNS and TOPSOLNE. The TOPSOLNS group includes the following OLNS information:
  - — number of OLNS queries launched
  - — number of OLNS queries not launched due to code gapping
  - — number of OLNS responses with screened data
  - — number of timeouts.
- The TOPSOLNE group increases counts for each OLNS error and includes signaling connection control part (SCCP) routing errors or TCAP level errors. An example of SCCP routing errors is subsystem failure or translation not available for this address. An example of TCAP level errors is a missing customer record.

Translations table flow

The TOPS OLNS Interface translations tables appear in the following list:

- Table DNSCRN provides information to screen calling numbers.
- Table TOPSDB maps DNs (from DNSCRN) to TDBDAOPT and TDBCLASS.
- Table TDBCLASS contains information for restricted delivery numbers.
- Table SPLDNID identifies special originating number equipment.
- Table HOBICDEV defines hotel dial-up autoquote devices.
- Table TOPSDEV defines TOPS devices.
- Table OLNSTARS indexes in the OLNS display tables (OLNSRSDP and OLNSEQDP) for TA calls. Table OLNSTARS provides the restricted billing index (field SCRNCODE).

TOPS OLNS Interface (continued)

- Table OLNSDARS indexes in the OLNS display tables (OLNSRSDP and OLNSEQDP) for DA calls. Table OLNSDARS provides the restricted billing index (field SCRNCODE).
- Table OLNSRSDP provides operator displays for billing restrictions.
- Table OLNSEQDP provides operator displays for service equipment type.
- Table CT4QREST provides QMS queue refinement based on billing restrictions.
- Table DABILL specifies call types that are billed.
- Table ADACCOPT specifies billing methods for ADACC calls.
- Table OLNSERR indexes in table OLNSDFLT.
- Table OLNSDFLT provides data to handle protocol data errors.
- Table C7GTTYPE defines the global title.
- Table C7GTT maps global titles to CCS7 networks.
- Table C7NETSSN defines nodes and subsystems.
- Table C7LOCSSN provides information for local subsystems.
- Table C7RPLSSN provides the set of remote subsystem replicate pairs.

The TOPS OLNS Interface translation process appears in the following flowchart.

TOPS OLNS Interface (continued)

Table flow for TOPS OLNS Interface

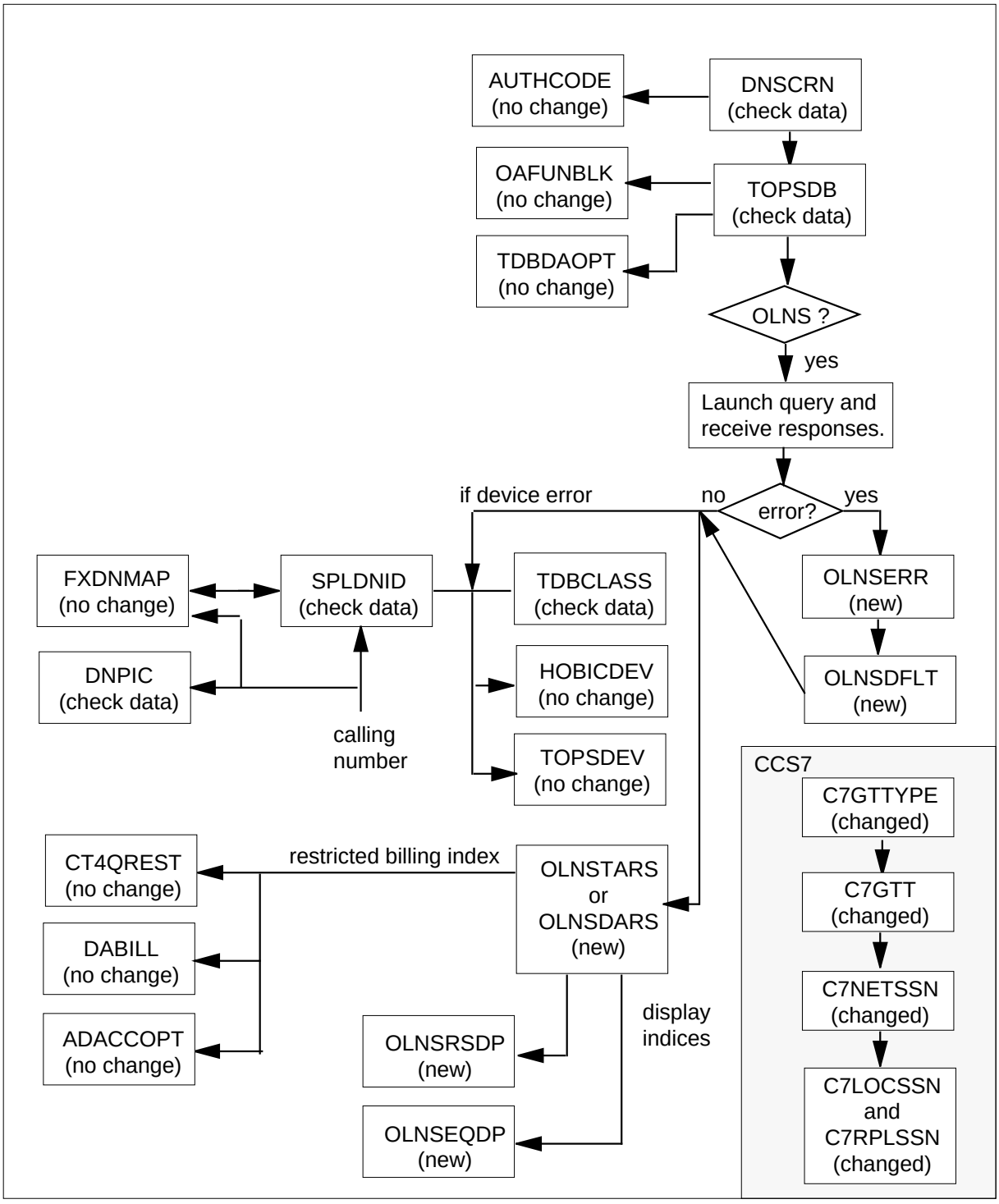

TOPS OLNS Interface (continued)

A list of the datafill content that the flowchart uses appears in the following table.

Datafill example for TOPS OLNS Interface

Datafill table	Example data
DNSCRN	6193205555 TOPSDB 5 0$
TOPSDB	5 6 0 0 0
TDBCLASS	6 AQHTL 11 Y N N
SPLDNID	6193201111 AQHTL 11 Y
HOBICDEV	11 NILDEV
TOPSDEV	11 E LF17 RAL LTC 4 3 13 DS1SIG BELL10
OLNSTARS	PRISON ALLOW ALLOW DISALL DISALL DISALL RSTR NOOPR 74 2 5
OLNSDARS	DORM ALLOW ALLOW ALLOW DISALL TONEP1 74 2 5
OLNSRSDP	2 NOCOL
OLNSEQDP	5 INMATE
CT4QREST	0_MIN_COIN 23 0_MIN_COIN_12
DABILL	411 COIN 23 Y Y LOCALDA Y Y AUTO
ADACCOPT	OH COIN 74 SENTPD $ DA S
OLNSERR	ACG STATION 1
OLNSDFLT	1 TN2 POTS1 ALLOW ALLOW ALLOW ALLOW ALLOW ALLOW ALLOW ALLOW ALLOW ALLOW
C7GTTYPE	OLNSGT ANSI7 11 OLNSGT$
C7GTT	OLNSGT 09 PCSSN (RTESET1 OLNS 0)$ SSN
C7NETSSN	RTESET1 OLNS 197
C7LOCSSN	OLNS 197 1 N N $
C7RPLSSN	OLNS RTESET1 RTESET2 N$

TOPS OLNS Interface (continued)

Limits

The following limits apply to TOPS OLNS Interface:

- In QMS, table CT4QREST allows queue refinement on the restricted billing index. When this table performs refinement on the restricted billing index with OLNS, the index is from table OLSNTARS. This action occurs because the index of tables OLNSTARS or OLNSDARS occurs by the service type of the call (TASERV or DASERV). In QMS, the service type of the call becomes known when CT4Q refinement completes. The system obtains the last CT4Q. The service type of call indexes TQMSSERV to determine the base service of the call. This action occurs late in the OLNS method. The OLNS uses the default service type TASERV. The call can route to the correct CT4Q because the system can check the call origination and the restricted billing index. When you enter data in table CT4QREST, the restricted billing index in use for DA calls comes out of table OLNSTARS. Table OLNSDARS does not contain the index. When the system determines the service type of the call, the system accesses the appropriate table for the restricted billing index.
- For calls that the system launches on OLNS query, OLNS increases the subscriber post-dial delay. The amount of time required for the query to return the database determines the delay.
- The North American market support OLNS.
- The OLNS applies to non-ISUP calls on incoming TOPS trunks and ISUP calls on incoming IT and ATC trunks. The supported signaling types on TOPS trunks are BELLANI, MOD_BELLANI, OSSANI, EAOSS, EAOSSIC, EAFGD, and COMFGD.
- The OLNS does not apply to intercept and inwards calls.
- The DMS switch cannot accept data for MSB7 functionality.
- TOPS IV positions do not support new screen displays for OLNS. This condition does not apply for the RESTBIL/DARSTBIL replacement. Calls that receive OLNS service can route to a TOPS IV position. New displays associated with OLNS calls do not appear. The billing restriction display area remains in use. With OLNS, the display from table OLNSEQDP appears in that area.

  Offices with both TOPS IV and TOPS MP or OPP-compatible positions, have different operator screen display. New displays are not available on the TOPS IV position.
- The OLNS screen display information in the DMS switch or OPP-compatible position tables must have the same information. This condition applies in the complete operator centralization (OC) network.

- The OLNS provides new calling number information. The operator screen displays differ for calls that launch and calls that do not launch OLNS queries.
- The OLNS does not support EAANI functionality TOPS DN Call Screening (ABS00007).
- The OLNS uses CRS_SUBRU_POOL5. The OLNS does not use CRS_SUBRU_POOL4 for AMA for TOPS calls that start in TOP05. This action allows a reduction of the value of CRS_SUBRU_ POOL4 in table OFCENG in TOPS offices. A current limit limit requires a cold restart to reduce the value of CRS_SUBRU_POOL4.
- One user at a time can use the OLNS verification tool (OLNSVER) increment. When a second user attempts to access the OLNSVER tool, an error message appears. The message indicates the name of the current user that uses the OLNSVER tool. The Translation verification tools section describes the tool. This section follows the datafill procedure section.
- When the MF-to-ISUP calling number blocking feature (AN1515) is active when BLKCLI = Y in table TDBCLASS. This feature is in functionality ISUP to TOPS, OSEA0005.

Interactions

The following paragraphs describe the actions between TOPS OLNS Interface and other functionalities.

Functionality OLNS IntraLATA Presubscription (OSEA0006) uses the intraLATA toll carrier that the OLNS database returns for call routing.

Activation/deactivation by the end user

The TOPS OLNS Interface does not require activation or deactivation by the end user.

Billing

New structure code 0772 records calls that launch an OLNS query. The following modules and tables add to Structure Code 0772:

- Module Code 019, table 679 in structure code 0772
- Module Code 219, table 680 in structure code 0772
- tables 675, 677, and 678 in structure code 0772

Structure Code 0772 supports the following call codes: 189, 190, 192, 194, 196, and 198.

TOPS OLNS Interface (continued)

Structure Code 0752 records operator-handled calls that do not launch an OLNS query. This structure code does not have any changes. A new value adds to the Screening Code field (Table 34) of Structure Code 0752.

For current module code 052, table 286 now supports three additional values.

Structure Code 0752, Table 34 (modified)

The OLNS changes table 34 for Structure Code 0752 to record screening information. This action occurs when the system launches an OLNS query on an OLNS qualified call. Table 34 has a new value. The new value applies when the system must launch an OLNS query, and the launch does not occur. An example of a condition that prevents the launch of the OLNS query is ACG.

Table 34, where value 00 has a new meaning and 01 is new, appears in the following table:

Screening Code (Table 34)

Character	Value	Meaning
1	0	Constant
2 -3	Screening Code Indicator	
	00*	Non-screened call (OLNS is not required; internal screening table not checked)
	01**	The system cannot launch OLNS query.
	64	Operating Company option
	66	Operating Company option
	67	No limits
	68	No limits
	71	Sent-Paid only
	72	Credit Card only
	73	Special Billing Number only
	74	Collect only
	76	Dormitory calling
Note 1: * - Meaning of value changed.		
Note 2: ** - New value		

Screening Code (Table 34)

Character	Value	Meaning
	81	Credit Card and Special Billing Number only
	82	Send-Paid and Collect only
	83	Collect and Special called only
	88	Customer-owned public phone
	89	Multiple carrier public phone
	91	Sent-Paid, Credit Card, Special Billing Number only
	92	Sent-Paid, Collect, Special Called only
	93	Credit Card, Special Billing Number, Bill to Third Party, Collect, Special Called only.
	94	Screened hotel/motel
	96	All conditions but local assistance
	97	All conditions but Sent-Paid and Bill to Third Number
	98	Coinless public telephone (Credit Card, Collect, Bill to Third Number and Special Called only)
	99	IC card caller
4	C	SIGN character (HEX C)

Note 1: * - Meaning of value changed.

Note 2: ** - New value

Module 052, Table 286 (modified)

The system can generate structure code 0752 and enter a value of 4 in the LIDB response field of module code 052. This action occurs when a call is OLNS qualified and attempts a query that does not launch. Automatic Code Gapping (ACG) can be a reason the system does not launch a query.

TOPS OLNS Interface (continued)

The supported values for Table 286, where values 1, 5 and 6 are supported, appear in the following table.

LIDB Response (Table 286)

Character	Value	Meaning
1	OLNS originating station billing restriction	
	1**	Complete OLNS response. This value appears with structure code 0772.
	2	Not allowed
	3	Always accept
	4*	The OLNS query does not occur
	5**	The system does not receive an OLNS response. The system sets this value when the systems performs an OLNS for an alternately billed call. The system does receive an OLNS response in the OLNS timeout interval. This value appears with structure code 0772.
	6**	The system receives a return error or reject response. The system sets this value when an OLNS query occurs for an alternately billed call and the system returns a return error or reject message. This value appear with structure code 0772.
	9	Not known
2-3	BNS Response	
	01*	Accept
	02*	Reject
	03*	Verify
	04*	Verify with operator
	CCN Response	

Note 1: * - Current values supported

Note 2: ** - New value supported

No asterisk - Value not supported

LIDB Response (Table 286)

Character	Value	Meaning
	05*	PIN match
	06*	PIN mismatch
	07*	Calling card account number service denial
	08*	PIN service denial
	09*	Restricted PIN
	10*	BNS/CCN query does not occur.
	11*	The system does not receive a BNS/CCN response
	12*	Return error or reject response received
	99*	Not known
4	C*	SIGN character (HEX C)
Note 1: * - Current values supported ***Note 2:*** ** - New value supported No asterisk - Value not supported		

Module 052, Table 277 (unchanged)

Structure code 0752, Table 277 is the Treatment Indicator field. The current values do not change. The LIDB field now contains the new values that appear in the following table.

New LIDB Response Mapping to Treatment Indicator (Table 277)

New LIDB responses	Existing value	Meaning of current treatment indicator
AUTO_TRMT_TONE_ANN_2	1	Automated treatment
AUTO_TRMT_TONE_ANN_3	1	Automated treatment
AUTO_TRMT_TONE_NOPR	1	Automated treatment

TOPS OLNS Interface (continued)

New LIDB Response Mapping to Treatment Indicator (Table 277)

New LIDB responses	Existing value	Meaning of current treatment indicator
AUTO_TRMT_TONE_OPRANN_4_NOPR	1	Automated treatment
AUTO_TRMT_TONE_OPRANN_5_NOPR	1	Automated treatment
AUTO_TRMT_TONE_OPRANN_6_NOPR	1	Automated treatment
AUTO_TRMT_TONE_OPRANN_7	1	Automated treatment
AUTO_TRMT_TONE_OPRANN_8	1	Automated treatment
AUTO_TRMT_TONE_OPRANN_9	1	Automated treatment
AUTO_TRMT_TONE_OPRANN_10_NOPR	1	Automated treatment
AUTO_TRMT_TONE_OPRANN_11_NOPR	1	Automated treatment
AUTO_TRMT_TONE_OPRANN_12_NOPR	1	Automated treatment
AUTO_TRMT_SPEC_1	1	Automated treatment
AUTO_TRMT_SPEC_2	1	Automated treatment
AUTO_TRMT_SPEC_3	1	Automated treatment
AUTO_TRMT_SPEC_4	1	Automated treatment
AUTO_TRMT_SPEC_5	1	Automated treatment
AUTO_TRMT_TONE_OPRANN_13	1	Automated treatment

New LIDB Response Mapping to Treatment Indicator (Table 277)

New LIDB responses	Existing value	Meaning of current treatment indicator
AUTO_TRMT_TONE_OPRANN_14_NOPR	1	Automated treatment
OPR_TRMT_FRAUD	2	Operator treatment

Structure Code 0772 (new)

The system generates structure code 0772 for calls that launch an OLNS query. This new structure code adds new tables 675, and 677-680. Table 679 adds to structure code 0772 as part of module 019. This action occurs when the values of RECORD_ORIG_BILLING_SERVICE parameter is Y in table TOPAMAOP. Table 680 adds to structure code 0772 as part of module 219. This action occurs when the RECORD_ORIG_BILLING_SERVICE parameter in table TOPAMAOP is Y.

The following table describes the new structure code 0772.

Structure code 0772

Information	Table number	Number of characters
Record Descriptor Word	000	
Hexadecimal Identifier	00	2
Structure Code	0	6
Call Type	1	4
Sensor Type	2	4
Sensor Identification	3	8
Recording Office Type	4	4
Recording Office Identification	5	8
Date	6	6
Timing Indicator	7	6

TOPS OLNS Interface (continued)

Structure code 0772

Information	Table number	Number of characters
Study Indicator	8	8
Service Observed/Traffic Sampled	10	2
Originating NPA	13	4
Originating Number	14	8
Time	18	8
Elapsed Time	19	10
Operator Identifications	296	14
Accumulated Operator Work Time	403	6
Modified Service or Equipment indicator (new)	675	4
Station Signaling Indicator	276	2
Modified Treatment Indicator (new)	677	4
Called Number/Serv. Access Number Input	278	2
Calling Number Source	279	2
Additional Service Information (new)	678	4

The new Table 675 appears in the following table.

Modified Service or Equipment Indicator (Table 675)

Character	Value	Meaning
1-3	000	Not available because of LIDB Data Screening
	001	POTS Line (Business/Residential)
	002	LEC Public - Standard Interface - Postpay Overtime
	003	POTS Line - Residential - Message rate 1

Modified Service or Equipment Indicator (Table 675)

Character	Value	Meaning
	004	POTS Line - Residential - Message rate 2
	005	LEC Semi-Public
	006	POTS Line - Business - Flat Rate
	007	POTS Line - Business _ Message Rate 1
	008	Coinless (non-IPP)
	009	Coinless (IPP)
	010	LEC Prepaid Telecommunications Card Station
	011	POTS Line - Business - Message Rate 2
	012	LEC Public - Standard Interface - Prepay Overtime
	013	LEC Public - Alternate Interface
	014	IC Public - Standard Interface
	015	IC Public - Alternate Interface
	016	POTS Line - Residential- Flat Rate
	017	Voice Quote - Without Tax
	018	Voice Quote- With Tax
	019	IPP - Standard Interface
	020	IPP - Alternate Interface
	021	Hospital
	022	Prison (non-IPP)
	023	Auto Quote - Without Tax
	024	Auto Quote - With Tax
	025	Dormitory Line
	026	Centrex Line
	027	PBX Line

TOPS OLNS Interface (continued)

Modified Service or Equipment Indicator (Table 675)

Character	Value	Meaning
	028	Prison (IPP)
	029	WATS Line
	030	Cellular
	031	Pager
	032	Personal Communications Service (PCS)
	033	Feature Group A
	034	Mobile
	035	LEC Public - Special Billing - Post-Pay Overtime
	036	LEC Public - Special Billing - Pre-Pay Overtime
	037	Public - Incompatible Network Interface
	038	Cellular - Rate 1
	039	Cellular - Rate 2
	040	POTS Line - Business Single Line
	041	POTS Line - Business Multi-line
	042	Public Postpay Overtime
	256	Reserved
	999	Not known
4	C	SIGN character (HEX C)

The following table describes the new Table 677:

Modified Treatment Indicator (Table 677)

Character	Value	Meaning
1-3	000	Not available because of LIDB Data Screening
	001	Automated treatment - provide alerting tone only
	002	Automated treatment - provides alerting tone and prompting announcement 1

Modified Treatment Indicator (Table 677)

Character	Value	Meaning
	003	Operator treatment - operator handling (station limitations)
	004	Special treatment - operator handling (at customer request)
	005	Special treatment - handicapped
	006	Special treatment - deaf
	007	Automated Treatment - provides alerting tone and prompting announcement 2
	008	Automated treatment - provides alerting tone and prompting announcement 3
	009	Special treatment - operator handling (high fraud)
	010	Automated treatment - provides alerting tone only - no operator access
	011	Automated treatment - provides alerting tone and prompting announcement 4 - no operator access
	012	Automated treatment - provides alerting tone and prompting announcement 5 - no operator access
	013	Automated treatment - provides alerting tone and prompting announcement 6 - no operator access
	014	Automated treatment - provides alerting tone and prompting announcement 7 - no operator access
	015	Automated treatment - provides alerting tone and prompting announcement 8 - no operator access
	016	Automated treatment - provides alerting tone and prompting announcement 9 - no operator access

TOPS OLNS Interface (continued)

Modified Treatment Indicator (Table 677)

Character	Value	Meaning
	017	Automated treatment - provides alerting tone and prompting announcement 10 - no operator access
	018	Automated treatment - provides alerting tone and prompting announcement 11 - no operator access
	019	Automated treatment - provides alerting tone and prompting announcement 12 - no operator access
	020	Automated treatment - special handling 1
	021	Automated treatment - special handling 2
	022	Automated treatment - special handling 3
	023	Automated treatment - special handling 4
	024	Automated treatment - special handling 5
	025	Automated treatment - provide alerting tone and prompting announcement 13
	026	Automated treatment - provides alerting tone and prompting announcement 14 - no operator access
	256	The system does not receive response
	999	Not known
4	C	SIGN character (HEX C)

The new Table 678 appear the following table.

Additional Service Information (Table 678)

Character	Value	Meaning
1-3	000	Not available because LIDB Data Screening
	001	Foreign Language Identifier
	002	Generic Name

Additional Service Information (Table 678)

Character	Value	Meaning
	003	Foreign Language Identifier and Generic Name
	004	Alphanumeric String
	005	Foreign Language Identifier and Alphanumeric String
	006	Generic Name and Alphanumeric String
	007	Foreign Language Identifier, Generic Name, and Alphanumeric String
	997	The system does not return additional Information
	998	The system does not receive response information
	999	Not known
	C	SIGN Character (HEX C)

Table 678 records information for three parameters that the OLNS database can return. These parameters are Foreign Language, Generic Name and Alphanumeric String. The rules to fill table 678 follow:

- Treat received parameters that contains screened data as not received.
- Treat received parameters that contain values that are not known as not received. The parameter contains values that are not known as opposed to not assigned.
- Treat received parameters that contain a value that is not assigned as received.
- Positive responses require immediate action. For example, the foreign language parameter returns with a value that is not assigned. The value of the Additional Services Information field is 005. This value applies to the generic name parameter with screened data, and the alphanumeric parameter with valid data.

The following is an example AMA record for structure code 0772. Structure code 0772 supports the call codes and module codes that the current structure code 0752 supports. Structure code 0772 supports new module codes 019 and 219, that the following sections describes below.

TOPS OLNS Interface (continued)

Example AMA record for Structure Code 0772

```
HEX ID:AA STRUCTURE CODE:40772C CALLCODE:192C
SENSOR TYPE:036C SENSOR ID:0123456C
REC OFFICE TYPE:036CREC OFFICE ID:0123456C
DATE:00523C TIMING IND:00000CSTUDY IND:0200000C
SERVICE OBSERVED:2C ORIG NPA:613CORIG NUMBER:2391234C
CONNECT TIME:1459162CELAPSED TIME:000000000C
OPERATOR IDS:10102000099999CACC OPERATOR WORK TIME:00250C
MOD SVC EQP IND:001CSTATION SIGNALLING IND:2C
MODIFIED TRMT IND:002CCALLED NUMBER INPUT:1C
CALLING NUMBER SOURCE:1C
ADDITIONAL SERV INFO: 005C
```

Alter TOP05, TOPS uses extension blocks from the CRS-SUBRU_POOL5 pool and not CRS-SUBRU_POOL4.

Previous and new recording unit sizes

	Old XRU	New XRU
Provisioned by parameter:	CRS-SUBRU_POOL4 (Table OFCENG)	CRS-SUBRU_POOL5 (Table OFCENG)
Default	100	100
Size	41 words for each recording unit	61 words for each recording unit

Module Code 019 (new)

Module Code 019 records the billing information associated with the originating line for toll and assist calls. Module Code 019 is appended to Structure Code 0772 when the system launches an OLNS query for a TA call. This condition applies when the system receives a complete response and the RECORD_ORIG_BILLING_SERVICE parameter in table TOPAMAOP is Yes (Y).

The system does not append code 019 when one of the following conditions occurs:

- the parameter is turned on and a timeout occurs when the system waits for an OLNS response
- the system receives a return error or reject message from the OLNS database.

Module Code 019 records the billing information that associates with the originating line. The following table describes this module code that uses the new Table 679:

Module code 019

Information	Table number	Number of characters
Module Code Identification	88	4
Originating Billing/Service Indicator (new)	679	12

The following table describes the new Table 679.

Originating Billing/Services Indicator (Table 679)

Character	Value	Meaning
1	0	Constant
2	Originating Collect Billing Indicator	
	0	Not available because of LIDB Data Screening
	1	Allowed from this line
	2	Allowed from this line for domestic calls only
	3	Not allowed from this line
	9	Not available
3	Originating Third Number Billing Indicator	
	0	Not available because of LIDB Data Screening
	1	Allowed from this line
	2	Allowed from this line for domestic calls only
	3	Not Allowed from this line
	4	Allowed with operator Verification
	5	Allowed with operator or automated verification
	9	Not available

TOPS OLNS Interface (continued)

Originating Billing/Services Indicator (Table 679)

Character	Value	Meaning
4	Originating Local, Non-Toll Call Indicator	
	0	Not available because of LIDB Data Screening
	1	Allowed from this line
	2	Not allowed from this line
	9	Not Available
5-6	Originating Credit Card Indicator	
	00	Not available because of LIDB Data Screening
	01	Allowed from this line
	02	Allowed from this line for domestic calls only
	03	Not allowed from this line
	04	Card Issuer limits associated with this line for local calls only
	05	Card Issuer limits associated with this line for IntraLATA, non-local calls only
	06	Card Issuer limits associated with this line
	07	Non-domestic calls not allowed from this line and Card Issuer restrictions for local calls
	08	Non-domestic calls not allowed from this line and Card Issuer restrictions for IntraLATA, non-local calls only
	09	Non-domestic calls not allowed from this line and Card Issuer limits associated with this line
	99	Not available
7	Originating Free DA Indicator	
	0	Not available because of LIDB Data Screening
	1	Allowed from this line
	2	Not allowed from this line

Originating Billing/Services Indicator (Table 679)

Character	Value	Meaning
	9	Not Available
8	Originating Sent-Paid Indicator	
	0	Not available because of LIDB Data Screening
	1	Allowed from this line
	2	Not allowed from this line
	9	Not Available
9	Originating Sent-Paid Indicator	
	0	Not available because of LIDB Data Screening
	1	Allowed from this line
	2	Allowed from this line from domestic calls only
	3	Allowed from this line for intraLATA calls only, due to nonpayment
	4	Allowed from this line for intraLATA calls only, at customer request
	5	Not allowed from this line
	9	Not Available
10	Originating DACC Indicator	
	0	Not available because of LIDB Data Screening
	1	Allowed from this line (for toll and non-toll calls)
	2	Not allowed from this line (for toll and non-toll calls)
	3	Allowed from this line with billing restrictions (for toll and non-toll calls)
	4	Allowed from this line for local, non-toll calls only
	5	Allowed with billing restrictions, no sent-paid
	9	Not Available

TOPS OLNS Interface (continued)

Originating Billing/Services Indicator (Table 679)

Character	Value	Meaning
11	Originating Billing/Service Spare Indicator	
	0	Not available because of LIDB Data Screening
	1	Allowed from this line
	2	Not allowed from this line
	9	Not Available
12	C	SiGN character (HEX C)

The following is an example AMA record for structure code 0772 with module 019:

Example AMA record for Structure Code 0772 with module 019

```
HEX ID:AA HEX ID:AA STRUCTURE CODE:40772C
CALLCODE:192CSENSOR TYPE:036C SENSOR ID:0123456C
REC OFFICE TYPE:036CREC OFFICE ID:0123456C DATE:00523C
TIMING IND:00000CSTUDY IND:0200000C SERVICE OBSERVED:0C
ORIG NPA:613CORIG NUMBER:2391234C
CONNECT TIME:15222248CELAPSED TIME:000000337C
OPERATOR IDS:1010200009999CACC OPERATOR WORK TIME:00250C
MOD SVC/EQP IND:001CSTATION SIGNALLING IND:2C
MODIFIED TRMT IND:002CCALLED NUMBER INPUT:1C
CALLING NUMBER SOURCE:1CADDITIONAL SERV INFO: 004C
MODULE CODE: 316CLOCAL INDICATOR:1C MODULE CODE: 311C
ORIG CALL TYPE: 001CMODULE CODE: 051C OVERSEAS IND: 0C
TERM NPA: 00201CTERM NUMBER: 2201234C COMPLETION IND: 001C
RATE IND: 1COSS CALL COMPLETION CONDITIONS: 1111110C
MODULE CODE:019 ORIG BILL SERV IND:01110101100C
MODULE CODE: 310C KEYING ACTIONS: 121111111C
MODULE CODE: 104C TRUNK FACILITY: 103000001C
MODULE CODE: 000C
```

Module Code 219 (new)

Module Code 219 records the billing information associated with the originating line. Module Code 219 is appended to Structure Code 0772 when the system launches an OLNS query on a DA call. This condition occurs when the system receives a complete response and parameter RECORD_ORIG_BILLING_SERVICE in table TOPAMAOP is set to Yes (Y).

The system does not add module code 019 to Structure Code 0772 when:

- the parameter is turned on and a timeout occurs when the system waits for an OLNS response
- the system receives a return error or reject message from the OLNS database.

Module Code 219 records the billing information associated with the originating line. The following describes this module code that contains new Tables 152 and 680:

Module code 219

Information	Table number	Number of characters
Module Code Identification	88	4
Context ID (changed)	152	4
Additional Originating Billing/Service Indicator (new)	680	8

The following table describes the new Table 152.

Context Id (Table 152)

Character	Value	Meaning
1-3	Contesting ID	
	001	Call Type Code
	002	Service Feature Code
	003	Message Billing Index
	004	Call Type Code in SCP response (new)
	005	Service Feature in SCP response (new)
	006	RAO Number (new)
	007	LATA number (new)
	008	Originating Listing Services (new)

TOPS OLNS Interface (continued)

Context Id (Table 152)

Character	Value	Meaning
	800-999	Unassigned
4	C	SiGN character (HEX C)

A description of the new Table 680 appears in the following table:

Additional Originating Billing/Services Indicator (Table 680)

Character	Value	Meaning
1	0	Constant
2	Originating Third Number Billing Indicator	
	0	Not available because of LIDB Data Screening
	1	Allowed from this line
	2	Not Allowed from this line
	3	Allowed with operator Verification
	4	Allowed with operator or automated verification
	9	Not available
3	Originating Credit Card Indicator	
	0	Not available because of LIDB Data Screening
	1	Allowed from this line
	2	Not allowed from this line
	3	Card Issuer restrictions associated with this line
	9	Not available
4	Originating Special BNS Indicator	
	0	Not available because of LIDB Data Screening
	1	Allowed from this line
	2	Not allowed from this line
	9	Not available

Additional Originating Billing/Services Indicator (Table 680)

Character	Value	Meaning
5	Originating Sent-Paid Indicator	
	0	Not available because of LIDB Data Screening
	1	Allowed from this line
	2	Not allowed from this line
	9	Not available
6	0	Constant
7	0	Constant
8	C	SiGN character (HEX C)

The following is an example AMA record for structure code 0772 with module 219:

Example AMA record for Structure Code 0772 with module 219

```
HEX ID:AA HEX ID:AA STRUCTURE CODE:40772C
CALLCODE:192CSENSOR TYPE:036C SENSOR ID:0123456C
REC OFFICE TYPE:036CREC OFFICE ID:0123456C DATE:80217C
TIMING IND:00000CSTUDY IND:0200000C SERVICE OBSERVED:0C
ORIG NPA:613CORIG NUMBER:2391234C
CONNECT TIME:0427380CELAPSED TIME:000000036C
OPERATOR IDS:10102000099999CACC OPERATOR WORK TIME:00250C
MOD SVC EQP IND:001CSTATION SIGNALLING IND:2C
MODIFIED TRMT IND:002CADDITIONAL SERV INFO: 997C
MODULE CODE: 311CORIG CALL TYPE: 036C MODULE CODE: 219C
CONTEXT ID: 008CADD ORIG BILL SERV IND: 0111100C
MODULE CODE: 310CKEYING ACTIONS: 111111111
MODULE CODE: 055C SERVICE ID: 001C
MEANS OF INFORMATION INPUT: 1C MEANS OF LSDB ACCESS:1C
LSDBS BOC ID: 11234C LSDB ACCESSES: FF
LISTING RESPONSE: 1CLISTING STATUS: 999999900C
REQUEST COUNTER: 001C MODULE CODE: 104C
TRUNK FACILITY ID: 103000001C  MODULE CODE: 000C
```

Station Message Detail Recording

The TOPS OLNS Interface does not affect Station Message Detail Recording.

TOPS OLNS Interface (continued)

Datafilling office parameters

The following table describes the office parameters the TOPS OLNS Interface uses. Before the TCAPTRID Replacement functionality (TOPS07), the parameter max_no_of_trans_id was used to identify the maximum value of Transaction IDs. This value is no longer used. However, the parameter will not be removed For more information on office parameters, refer to *Office Parameters Reference Manual*.

Office parameters by TOPS OLNS Interface

Table name	Parameter name	Explanation and action
OFCENG	CRS_SUBRU_POOL5_SIZE	This new parameter allows the system to allocate the new SUBRU pool, CRS_SUBRU_POOL5. This pool allocates extension blocks of size 61 words. If EXT blocks from the CRS_SUBRU_POOL5 pool are not in use, set parameter to 0. The default value of the parameter is 100. A decrease to the parameter requires a cold restart. An increase to this parameter occurs immediately.

TOPS OLNS Interface (continued)

Office parameters by TOPS OLNS Interface

Table name	Parameter name	Explanation and action
		To dump and restore of an office that goes to TOP05, the system uses the following procedure: • If 10% of TOPS_NUM_RU or GOS_NUM_RU is less than the default value of 100, the system uses the default value. • If 10% of TOPS_NUM_RU or GOS_NUM_RU is greater than the default value and greater than the CRS_SUBRU_POOL4_SIZE parameter, the system copies the value of the CRS_SUBRU_POOL4_SIZE parameter. The system copies the value of that parameter to CRS_SUBRU_POOL5_SIZE. • If 10% of the value of TOPS_NUM_RU or GOS_NUM_RU is greater than the default value and less than the CRS_SUBRU_POOL4_SIZE parameter, the 10% figure is used. Provisioning rules apply to specified application. For TOPS offices, the following rule is recommended: `CRS_SUBRU_POOL5_SIZE* = TOPS_NUM_RU (TOPS office) or GOS_NUM_RU X 10% (TOPS global operator services office)` The percentage that TOPS uses can reduce the value of the CRS_SUBRU_POOL4_SIZE. Refer to the Office Parameter Reference Manual for details on how to change the value of the parameter. This parameter controls the CRS_SUBRU_POOL5 pool. If this pool does not have enough resources, the application that uses the pool loses billing.

TOPS OLNS Interface (continued)

Datafill sequence

The following table lists the tables that require datafill to implement TOPS OLNS Interface. The tables appear in the correct entry order.

Datafill requirements for TOPS OLNS Interface

Table	Purpose of table
Routing, screening, error handling	
OLNSRSDP	Originating Line Number Screening Restricted Billing Display provides operator displays for billing restrictions.
OLNSEQDP	Originating Line Number Screening Service/Equipment Display provides operator displays for service equipment type.
OLNSTARS	Originating Line Number Screening Directory Assistance Billing Restriction indexes to the OLNS display tables (OLNSRSDP and OLNSEQDP) for TA calls.
OLNSDARS	Originating Line Number Screening Directory Assistance Billing Restriction indexes in the OLNS display tables (OLNSRSDP and OLNSEQDP) for DA calls.
OLNSDFLT	Originating Line Number Screening Default provides data to handle protocol data errors.
OLNSERR	Originating Line Number Screening Default indexes in table OLNSDFLT.
TOPSTOPT	TOPS Trunk Options contains a new field that activates OLNS and indicates trunks for OLNS.
TOPAMAOP	TOPS AMA Options provides a new AMA parameter that enables an ONLS record attachment.
TOPSPARM	TOPS Parameters provides new parameters that control ANI ID spill and protocol timeout.
Remove unnecessary datafill from current tables	
TDBCLASS	TOPS Database Class contains information for restricted delivery numbers.
TOPSDB	TOPS Database maps DNs (from DNSCRN) to TDBDAOPT and TDBCLASS.
DNSCRN	Directory Number Screening provides information for screening calling numbers.
DNPIC	Directory Number Primary InterLATA Carrier indicates the subscribers carrier.
SPLDNID	Special Directory Number identifies special originating number equipment.
RESTBIL	Restricted Billing defines billing restrictions for Toll and Assist calls.

Datafill requirements for TOPS OLNS Interface

Table	Purpose of table
DARSTBIL	Directory Assistance Restricted Billing defines billing restrictions for Directory Assist calls.
CCS7 routing	
C7GTTYPE	CCS7 Global Title Translations defines the global title.
C7NETSSN	CCS7 Network Subsystem Routing defines nodes and subsystems.
C7LOCSSN	CCS7 Local Subsystem provides information for local subsystems.
C7RPLSSN	CCS7 Replicate Subsystem provides the set of remote subsystem replicate pairs.
C7GTT	CCS7 Global Title Translations maps global titles to CCS7 networks.

Datafilling table OLNSRSDP

Originating Line Number Screening Restricted Billing Display is a new table. This table provides the 8-character restricted billing screen display for the operator. Table OLNSTARS provides the index to this table for toll and assist calls. Table OLNSDARS, field RSDPIDX provides the index for this table for directory assistance calls.

Enter data in this table before tables OLNSTARS and OLNSDARS.

A description of table OLNSRSDP appears in the following table:

Datafilling table OLNSRSDP

Field	Subfield or refinement	Entry	Explanation and action
RSDPKEY		see subfield RSDPIDX	Restricted Display Number Key. This field contains subfield RSDPIDX.
	RSDPIDX	0 to 99	Restricted Display Number Index. This field is the index to the table. The display number is from table OLNSTARS or OLNSDARS.
DISPLAY		8-character string	Operator Display. Enter an arbitrary name to identify the billing type on the operator display.

Datafill example for table OLNSRSDP

Sample datafill for table OLNSRSDP appears in the following table.

TOPS OLNS Interface (continued)

MAP example for table OLNSRSDP

```
RSDPKEY        DISPLAY
-------------------------------------------------------
2              NOCOL
```

Datafilling table OLNSEQDP

Originating Line Number Screening Service/Equipment Display is a new table. This table provides the 8-character equipment display for the operator. The key to this table depends on the equipment indicator that the OLNS database returned. The display from this table appears at the location that the display from table RESTBIL appeared before OLNS.

Enter this table before tables OLNSTARS and OLNSDARS.

A description of table OLNSEQDP appears in the following table:

Datafilling table OLNSEQDP

Field	Subfield or refinement	Entry	Explanation and action
EQDPKEY		see subfield EQDPIDX	Equipment Display Key. This field contains subfield EQDPIDX.
	EQDPIDX	0 to 99	Equipment Display Index. This field is the index to the table. Table OLNSTARS or OLNSDARS provides the display number.
DISPLAY		8-character string	Operator Display. Enter an arbitrary name to identify the equipment type of the originating party on the operator display.

Datafill example for table OLNSEQDP

Sample datafill for table OLNSEQDP appears in the following example.

MAP example for table OLNSEQDP

```
EQDPKEY        DISPLAY
-------------------------------------------------------
5              INMATE
```

Datafilling table OLNSTARS

Originating Line Number Screening Toll and Assist Billing Restriction is a new table. This table provides the restricted billing index for different protocols and an index to other DMS switch tables. The table provides the indexes for operator toll and assist calls. This table also provides operator screen display indexes to tables OLNSRSDP and OLNSEQDP. Table OLNSTARS has an eight-part key that contains the service/equipment indicator, billing options and treatment indicator.

Enter data in this table after tables OLNSRSDP and OLNSEQDP.

TOPS OLNS Interface (continued)

A description of table OLNSTARS appears in the following table:

Datafilling table OLNSTARS

Field	Subfield or refinement	Entry	Explanation and action
TARSKEY		see subfields	Toll and Assist Billing Restrictions Key. This field is the index to the table. This field contains subfields SRVEQPT, COLLECT, THIRD, CCARD, SPLBNS, SENTPD, DACC and TRMT.
	SERVEQPT	POTS, LECPOST, RES1, RES2, LECSEMI, BUSFLAT, BUS1, BUS2, NCNNOIPP, NCNIPP, PRETCS, LECPRE, LECALT, ICSTD, ICALT, RESFLAT, VQNOTAX, VQTAX, IPSTD, IPALT, HOSPITAL, PRISON, AQNOTAX, AQTAX, DORM, CENTREX,	Service Equipment. This field corresponds to the Originating Service/Equipment Indicator received from the OLNS database. This indicator provides the calling station type. The default is POTS. This indicator value appears in AMA table 675 (Modified Service or Equipment Indicator) of structure code 0772. The values are defined as follows: (The associated AMA protocol value appears in parenthesis. The AMA value is not an input to this table. The indicator is an input to AMA and to this field.) • POTS (01) - POTS line, business/residential • LECPOST (02) - LEC public, standard interface, postpay overtime Public, standard interface indicates a set. Signalling from the network controls the functions of the set such as, rating, coin detection, coin signaling and announcements. Postpay overtime indicates a coin phone for which the customer is allowed to talk for the initial period and one subsequent period. This condition occurs before the system prompts the customer for payment for the first period. Payment occurs after the appropriate time interval of a call.

TOPS OLNS Interface (continued)

Datafilling table OLNSTARS

Field	Subfield or refinement	Entry	Explanation and action
	SERVEQPT (continued)	PBX, PRSNIPP, WATS, CELL, PAGER, PCS, FGA, MOBILE, SPLPOST, SPLPRE, INCMPIF, CELLR1, CELLR2, BUSSL, BUSML, POST	Service Equipment (continued). The values are defined as follows: (The associated AMA protocol value appears in parenthesis. The AMA value is not an input to this table. The indicator is an input to AMA and to this field.) • RES1 (03), RES2 (04) - POTS line; residential; message rate 1, 2 Flat rate, message rate 1, and message rate 2 indicate the rate that applies to the line. The Real Time Rating System uses the rate that applies to the line to determine the rate for a call. • LECSEMI (05) - LEC semi-public: This indicator indicates that the originating stations is a coin phone an LEC (operating company) owns. The LEC and the local provider have specified agreement. • BUSFLAT (06) - POTS line, business, flat rate • BUS1 (07), BUS2 (11) - POTS line; business; message rate 1, 2 • NCNNOIPP (08) - coinless (non-IPP) • NCNIPP (09) - coinless (IPP) The IPP refers to a public station that an independent payphone provider owns. Before OLNS, these sets were called customer owned coin operator telephones (COCOTs). • PRETCS (10) - LEC prepaid, telecommunications card station: - This indicates a coinless set owned by an LEC that accepts pre-paid cards, like cash cards.

TOPS OLNS Interface (continued)

Datafilling table OLNSTARS

Field	Subfield or refinement	Entry	Explanation and action
	SERVEQPT (continued)		Service Equipment (continued). The values are defined as follows: (The associated AMA protocol value appears in parenthesis. The AMA value is not an input to this table. The indicator is an input to AMA and to this field.) • LECPRE (12) - LEC public, standard interface, prepay overtime Prepay overtime indicates a coin phone that allows the customer to talk for the initial period. The system prompts the customer to pay for the next time duration. The customer pays for all time intervals for a call before the intervals occur. • RESFLAT (16) - POTS line, residential, flat rate • VQNOTAX (17) - voice quote, without tax • LECALT (13) - LEC public, alternate interface: This indicates a set with functions such as, rating, coin detection, coin signaling, and announcements. These functions are in the set and are controlled locally. • ICSTD (14) - IC public, standard interface • ICALT (15) - IC public, alternate interface • VQTAX (18) - voice quote, with tax • IPSTD (19) - IPP, standard interface • IPALT (20) - IPP, alternate interface • HOSPITAL (21) - hospital • PRISON (22)- prison (non-IPP) • AQNOTAX (23) - auto quote, without tax

TOPS OLNS Interface (continued)

Datafilling table OLNSTARS

Field	Subfield or refinement	Entry	Explanation and action
	SERVEQPT (continued)		Service Equipment (continued). The values are defined as follows: (The associated AMA protocol value appears in parenthesis. The AMA value is not an input to this table. The indicator is an input to AMA and to this field.) • AQTAX (24)- auto quote, with tax • DORM (25) - dormitory line • CENTREX (26) - Centrex line • PBX (27) - PBX line • PRSNIPP (28) - prison (IPP) • WATS (29) - WATS line • CELL (30)- cellular • PAGER (31) - pager • PCS (32) - personal communications service (PCS) • FGA (33) - Feature Group A • MOBILE (34) - mobile • SPLPOST (35) - LEC public, special billing, post-pay overtime • SPLPRE (36) - LEC public, special billing, pre-pay overtime • INCMPIF (37) - public, incompatible network interface • CELLR1 (38), CELLR2 (39) - cellular; rate 1, 2 • BUSSL (40) - POTS line, business, single-line • BUSML (41) - POTS line, business, multi-line • POST (42) - public, postpay

TOPS OLNS Interface (continued)

Datafilling table OLNSTARS

Field	Subfield or refinement	Entry	Explanation and action
	COLLECT	ALLOW, DOM, DISALL	Collect. This field specifies the limit associated with collect billing. This field corresponds to the Originating Collect Billing Indicator of the Originating Billing Services Indicator parameter received from the OLNS database. This field is the same as the pre-OLNS billing type COLLECT. The values are defined as follows: • ALLOW - allowed • DOM - allowed for domestic • DISALL - not allowed
	THIRD	ALLOW, DOM, DISALL, OPR, OPRAUTO	Third Number. This field specifies the limits associated with third number billing. This field corresponds to the Third Number Billing Indicator of the Originating Billing Services Indicator parameter received from the OLNS database. This field is the same as the pre-OLNS billing types THIRD and SPLCLG. The values are defined as follows: • ALLOW - allowed • DOM - allowed for domestic • DISALL - not allowed • OPR - allowed with live operator verification • OPRAUTO - allowed with operator or automated verification

TOPS OLNS Interface (continued)

Datafilling table OLNSTARS

Field	Subfield or refinement	Entry	Explanation and action
	CCARD	ALLOW, DOM, DISALL, CIRLCL, CIRIA, CIR, NDCIRLCL, NDCIRIA, NDCIR	Calling Card. This field specifies the limits associated with calling card billing. This field corresponds to the Calling Card Indicator of the Originating Billing Services Indicator parameter received from the OLNS database. This field is the same as the pre-OLNS billing type CALLING CARD. The values are defined as follows: • ALLOW - allowed • DOM - allowed for domestic • DISALL - not allowed • CIRLCL - card issuer restrictions for local calls • CIRIA - card issuer restrictions for IntraLATA, non-local calls • CIR - card issuer restrictions • NDCIRLCL - non-domestic calls not allowed and card issuer restrictions for local calls • NDCIRIA - non-domestic calls not allowed and card issuer restrictions for IntraLATA, non-local calls • NDCIR - non-domestic calls not allowed and card issuer restrictions
	SPLBNS	ALLOW, DISALL	Special Billed Number Screening. This field specifies the limits associated with special called billing. This field corresponds to the Special BNS Indicator of the Originating Billing Services Indicator parameter received from the OLNS database. The values are defined as follows: • ALLOW - allowed • DISALL - not allowed

TOPS OLNS Interface (continued)

Datafilling table OLNSTARS

Field	Subfield or refinement	Entry	Explanation and action
	SENTPD	ALLOW, DOM, IAPYMT, IACUST, DISALL	Station Paid. This field specifies the limits associated with station paid billing. This field corresponds to the Sent Paid Indicator of the Originating Billing Services Indicator parameter received from the OLNS database. The values are defined as follows: • ALLOW - allowed • DOM - allowed for domestic • IAPYMT - allowed for IntraLATA calls due to non-payment • IACUST - allowed for IntraLATA calls at customer request • DISALL - not allowed

TOPS OLNS Interface (continued)

Datafilling table OLNSTARS

Field	Subfield or refinement	Entry	Explanation and action
	DACC	ALLOW, DISALL, RSTR, LCL, NOSTPD	Directory Assistance Call Completion. This field specifies the limits associated with DA call completion. This field corresponds to the Originating DACC Indicator of the Originating Billing Services Indicator parameter received from the OLNS database. The values are defined as follows: • ALLOW - allowed from this line for toll and non-toll calls. This value indicates the system allows call completion. The system does not require billing checks. The system allows all billing types. The LIDB datafill must not return the message allowed from this line with limits on the billing types allowed. This combination must not be allowed when the system populates LIDB. If the data is not consistent and the DACC indicator equals allowed, the system allows call completion to continue. The system does not check for billing limits. This value is used when datafill of the LIDB occurs. This action occurs if a line has a billing limit on the DA but not the TA portion of the call. This action also occurs when the billing types do not have billing limits. • DISALL - not allowed from this line for toll and non-toll calls. This value indicates the system does not allow call completion for this line. • RSTR - allowed from this line with billing limits for toll and non-toll calls. This value indicates the system allows call completion. The DMS switch checks selected billing against the billing indicator to determine if the system allows selected billing. Data entered in the LIDB allows the use of this value if a line has a billing limit on the TA portion of the call.

TOPS OLNS Interface (continued)

Datafilling table OLNSTARS

Field	Subfield or refinement	Entry	Explanation and action
	DACC (continued)		Directory Assistance Call Completion (continued). The values are defined as follows: • LCL - allowed from this line for local, non-toll calls. This value indicates the system allows call completion for local calls that cannot be billed. • NOSTPD - allowed from this line for alternate billed calls - no sent paid. This value indicates that the system does not allow station paid billing on call completion. The DMS switch checks the selected billing against the billing indicators to determine if the system allows billing. This action occurs with the same method as RSTR except the system does not allow station paid. The indicator does not affect this action. For the datafill of the LIDB, this value can be used if a line has a billing limit on the TA portion of the call. The limit does not apply to the sent paid indicator and must not be allowed for call completion, or the line does not have limits. The system does not allow sent paid on the call completion part of the call.

TOPS OLNS Interface (continued)

Datafilling table OLNSTARS

Field	Subfield or refinement	Entry	Explanation and action
	TRMT	TONE, TONEP1, TONEP2, TONEP3, TONEP7, TONEP8, TONEP9, TONEP13, OPRSTA, OPRCUST, HANDCAP, DEAF, FRAUD, NOOPR, TP4NOPR, TP5NOPR, TP6NOPR, TP10NOPR, TP11NOPR, TP12NOPR,TP14NOPR,SPL1, SPL2, SPL3, SPL4, SPL5	Treatment. The OLNS database returns this Treatment indicator. The default is TONEP2. This field corresponds to AMA table 677 (modified treatment indicator) in structure code 0772. The values are defined as follows (AMA values are in parenthesis: • TONE (01) - automated treatment, provide alerting tone only • TONEP1 (01), TONEP2 (07), TONE3 (08), TONEP7-TONEP9, TONEP13 -automated treatment, provide alerting tone and prompting announcement 1-3,7-9,13 • OPRSTA (03) - operator treatment, operator handling (station limitations) • OPRCUST (04) - operator treatment, operator handling (at customer request) • HANDCAP (05) - special treatment, handicapped • DEAF (06) - special treatment, deaf • FRAUD (09) - operator treatment, high fraud • NOOPR (10) - automated treatment, provide alerting tone only - no operator access • TP4NOPR (11), TP5NOPR (12), TP6NOPR (13), TP10NOPR-TP12NOPR, TP14NOPR - automated treatment, provide alerting tone and prompting announcement 4-6, 10-12,14 - no operator access • SPL1 -SPL5 - automated treatment, special handling 1-5
SCRNCODE		0 to 100	Screen Code. This field replaces the restricted billing number from table SPLDNID. Different protocols use this field for announcements and as an index to tables like DABILL, ADACCOPT, CT4QREST. Value 100 is the nil value.

TOPS OLNS Interface (continued)

Datafilling table OLNSTARS

Field	Subfield or refinement	Entry	Explanation and action
RSDPIDX		0 to 100	Restriction Display Index. This is an index to table OLNSRSDP to obtain a display for the billing type. Value 100 is the nil display number and indicates a screen display does not occur.
EQDPIDX		0 to 100	Equipment Display Index. An index to table OLNSEQDP to obtain a display for the originating equipment type. Value 100 is the nil display number and indicates a screen display does not occur.

Datafill example for table OLNSTARS

Sample datafill for table OLNSTARS appears in the following table.

MAP example for table OLNSTARS

```
TARSKEY
                                SCRNCODE  RSDPIDX  EQDPIDX
-------------------------------------------------------
PRISON ALLOW ALLOW DISALL DISALL DISALL RSTR OPRSTA
                                  74       1        5
```

Datafilling table OLNSDARS

Originating Line Number Screening Directory Assistance Billing Restriction is a new table for directory assistance calls. This table provides the restricted billing index for different protocols and an index to other DMS switch tables. Table OLNSDARS provides operator screen display indexes to tables OLNSRSDP and OLNSEQDP. Table OLNSDARS has an eight-part key that contains the service/equipment indicator, DA billing options and treatment indicator.

Enter data for this table after tables OLNSRSDP and OLNSEQDP.

TOPS OLNS Interface (continued)

The following table describes the table OLNSDARS:

Datafilling table OLNSDARS

Field	Subfield or refinement	Entry	Explanation and action
DARSKEY		see subfields	Toll and Assist Billing Restrictions Key. This field is the index to this table and contains subfields SRVEQPT, THIRD, CCARD, SPLBNS, SENTPD and TRMT.
	SERVEQPT	POTS, LECPOST, RES1, RES2, LECSEMI, BUSFLAT, BUS1, BUS2, NCNNOIPP, NCNIPP, PRETCS, LECPRE, LECALT, ICSTD, ICALT, RESFLAT, VQNOTAX, VQTAX, IPSTD, IPALT, HOSPITAL, PRISON, AQNOTAX, AQTAX, DORM, CENTREX,	Service Equipment. This field corresponds to the Originating Service/Equipment Indicator received from the OLNS database. This indicator provides the calling station type. The default is POTS. This indicator value appears in AMA table 675 (Modified Service or Equipment Indicator) of structure code 0772. The values are defined as follows: (The associated AMA protocol value appears in parenthesis. The AMA value is not an input to this table. The indicator is an input to AMA and to this field.) • POTS (01) - POTS line, business/residential • LECPOST (02) - LEC public, standard interface, postpay overtime Public, standard interface indicates a set whose functions the signaling from the network control. These functions are rating, coin detection, coin signaling, and announcements. Postpay overtime indicates a coin phone that allows the customer to talk for the initial period and one subsequent period. The system prompts for payment for the previous period. Payment occurs after the correct time interval of a call.

TOPS OLNS Interface (continued)

Datafilling table OLNSDARS

Field	Subfield or refinement	Entry	Explanation and action
	SERVEQPT (continued)	PBX, PRSNIPP, WATS, CELL, PAGER, PCS, FGA, MOBILE, SPLPOST, SPLPRE, INCMPIF, CELLR1, CELLR2, BUSSL, BUSML, POST	Service Equipment (continued). The values are defined as follows: (The associated AMA protocol value appears in parenthesis. The AMA value is not an input to this table. The indicator is an input to AMA and to this field.) • RES1 (03), RES2 (04) - POTS line; residential; message rate 1, 2 Flat rate, message rate 1, and message rate 2 indicate the rate that applies to the line. The Real Time Rating System uses this rate to determine the rate for a call. • LECSEMI (05) - LEC semi-public. This indicates that the originating stations is a coin phone that an LEC (operating company) owns. The LEC and location provider have specified arrangements. • BUSFLAT (06) - POTS line, business, flat rate • BUS1 (07), BUS2 (11) - POTS line; business; message rate 1, 2 • NCNNOIPP (08) - coinless (non-IPP) • NCNIPP (09) - coinless (IPP) The IPP refers to a public station that an independent payphone provider owns. Before OLNS, these sets were called customer owned coin operator telephones (COCOTs). • PRETCS (10) - LEC prepaid, telecommunications card station. - This indicates a coinless set, that an LEC owns, that accepts pre-paid cards, like cash cards.

TOPS OLNS Interface (continued)

Datafilling table OLNSDARS

Field	Subfield or refinement	Entry	Explanation and action
	SERVEQPT (continued)		Service Equipment (continued). The values are defined as follows: (The associated AMA protocol value appears in parenthesis. The AMA value is not an input to this table. The indicator is an input to AMA and to this field.) • LECPRE (12) - LEC public, standard interface, prepay overtime Prepay overtime indicates a coin phone that allows the customer to talk for the initial period. The system prompts the customer to pay before the next time duration. The customer pays for a call before the intervals occur. • RESFLAT (16) - POTS line, residential, flat rate • VQNOTAX (17) - voice quote, without tax • LECALT (13) - LEC public, alternate interface. This indicates a set with the functions rating, coin detection, coin signaling and announcements. These functions are in the set and are controlled locally. • ICSTD (14) - IC public, standard interface • ICALT (15) - IC public, alternate interface • VQTAX (18) - voice quote, with tax • IPSTD (19) - IPP, standard interface • IPALT (20) - IPP, alternate interface • HOSPITAL (21) - hospital • PRISON (22)- prison (non-IPP) • AQNOTAX (23) - auto quote, without tax

TOPS OLNS Interface (continued)

Datafilling table OLNSDARS

Field	Subfield or refinement	Entry	Explanation and action
	SERVEQPT (continued)		Service Equipment (continued). The values are defined as follows: (The associated AMA protocol value appears in parenthesis. The AMA value is not an input to this table. The indicator is an input to AMA and to this field.) • AQTAX (24)- auto quote, with tax • DORM (25) - dormitory line • CENTREX (26) - Centrex line • PBX (27) - PBX line • PRSNIPP (28) - prison (IPP) • WATS (29) - WATS line • CELL (30)- cellular • PAGER (31) - pager • PCS (32) - personal communications service (PCS) • FGA (33) - Feature Group A • MOBILE (34) - mobile • SPLPOST (35) - LEC public, special billing, post-pay overtime • SPLPRE (36) - LEC public, special billing, pre-pay overtime • INCMPIF (37) - public, incompatible network interface • CELLR1 (38), CELLR2 (39) - cellular; rate 1, 2 • BUSSL (40) - POTS line, business, single-line • BUSML (41) - POTS line, business, multi-line • POST (42) - public, postpay

TOPS OLNS Interface (continued)

Datafilling table OLNSDARS

Field	Subfield or refinement	Entry	Explanation and action
	THIRD	ALLOW, DISALL, OPR, OPRAUTO	Third Number. This field specifies the limits associated with third number billing. This field corresponds to the Third Number Billing Indicator of the Originating Billing Services Indicator parameter received from the OLNS database. This field is the same as the pre-OLNS billing types THIRD and SPLCLG. The values are defined as follows: • ALLOW - allowed • DISALL - not allowed • OPR - allowed with live operator verification • OPRAUTO - allowed with operator or automated verification
	CCARD	ALLOW, DISALL, CIR	Calling Card. This field specifies the limits associated with calling card billing. This field corresponds to the Calling Card Indicator of the Originating Billing Services Indicator parameter received from the OLNS database. This field is the same as the pre-OLNS billing type CALLING CARD. The values are defined as follows: • ALLOW - allowed • DISALL - not allowed • CIR - card issuer restrictions
	SPLBNS	ALLOW, DISALL	Special Billed Number Screening. This field specifies the limits associated with special called billing. This field corresponds to the Special BNS Indicator of the Originating Billing Services Indicator parameter received from the OLNS database. The values are defined as follows: • ALLOW - allowed • DISALL - not allowed

TOPS OLNS Interface (continued)

Datafilling table OLNSDARS

Field	Subfield or refinement	Entry	Explanation and action
	SENTPD	ALLOW, DISALL	Station Paid. This field specifies the limits associated with station paid billing. This field corresponds to the Sent Paid Indicator of the Originating Billing Services Indicator parameter received from the OLNS database. The values are defined as follows: • ALLOW - allowed • DISALL - not allowed
	TRMT	TONE, TONEP1, TONEP2, TONEP3, TONEP7, TONEP8, TONEP9, TONEP13, OPRSTA, OPRCUST, HANDCAP, DEAF, FRAUD, NOOPR, TP4NOPR, TP5NOPR, TP6NOPR, TP10NOPR, TP11NOPR, TP12NOPR,TP14NOPR, SPL1, SPL2, SPL3, SPL4, SPL5	Treatment. This OLNS database returns this Treatment indicator. The default is TONEP2. The values are defined as follows: • TONE - automated treatment, provide alerting tone only • TONEP1-TONEP3, TONEP7-TONEP9, TONEP13 -automated treatment, provide alerting tone and prompting announcement 1-3,7-9,13 • OPRSTA - operator treatment, operator handling (station limits) • OPRCUST - operator treatment, operator handling (at customer request) • HANDCAP - special treatment, handicapped • DEAF- special treatment, deaf • FRAUD - operator treatment, high fraud • NOOPR - automated treatment, provide alerting tone only - no operator access • TP4NOPR-TP6NOPR, TP10NOPR-TP12NOPR, TP14NOPR, - automated treatment, provide alerting tone and prompting announcement 4-6, 10-12,14 - no operator access • SPL1 -SPL5 - automated treatment, special handling 1-5

Datafilling table OLNSDARS

Field	Subfield or refinement	Entry	Explanation and action
SCRNCODE		0 to 100	Screen Code. The field replaces the restricted billing number from table SPLDNID. Different protocols use this field for announcements and as an index to tables, like DABILL, ADACCOPT, CT4QREST.
RSDPIDX		0 to 100	Restriction Display Index. This field is an index to table OLNSRSDP to obtain a display for the billing type. Value 100 is the nil display number.
EQDPIDX		0 to 100	Equipment Display Index. This field is an index into table OLNSEQDP to obtain a display for the originating equipment type. Value 100 is the nil display number.

Datafill example for table OLNSDARS

Sample datafill for table OLNSDARS appears in the following example.

MAP example for table OLNSDARS

```
DARSKEY
                                  SCRNCODE  RSDPIDX  EQDPIDX
-------------------------------------------------------------
DORM ALLOW ALLOW ALLOW DISALL TONEP1
                                   5         2        2
```

Datafilling table OLNSDFLT

Originating Line Number Screening Directory Assistance Default is a new table that provides information on how to handle OLNS query protocol data errors. The information contains TA and DA billing limits, service/equipment type and call treatment. Table OLNSERR indexes table OLNSDFLT.

The DACOLL indicator does not appear because the system reject collect billing on DA calls.

Enter data in table OLNSDFLT before table OLNSERR.

TOPS OLNS Interface (continued)

The following table describes the table OLNSDFLT:

Datafilling table OLNSDFLT

Field	Subfield or refinement	Entry	Explanation and action
IDX		0 to 99	Index. Index to table from table OLNSERR. The default value is 0.
	TRMT	SCRND, TONE, TONEP1, TONEP2, TONEP3, TONEP7, TONEP8, TONEP9, TONEP13, OPRSTA, OPRCUST, HANDCAP, DEAF, FRAUD, NOOPR, TP4NOPR, TP5NOPR, TP6NOPR, TP10NOPR, TP11NOPR, TP12NOPR,TP14NOPR, SPL1, SPL2, SPL3, SPL4, SPL5	Treatment. This value is the Treatment indicator that the OLNS database returns. The default is the OLNS database returns. The default value is TONEP2. The values are defined as follows: • SCRND - not available because LIDB data screening • TONE - automated treatment, provide alerting tone only • TONEP1-TONEP3, TONEP7-TONEP9, TONEP13 -automated treatment, provide alerting tone and prompting announcement 1-3,7-9,13 • OPRSTA - operator treatment, operator handling (station limits) • OPRCUST - operator treatment, operator handling (at customer request) • HANDCAP - special treatment, handicapped • DEAF- special treatment, deaf • FRAUD - operator treatment, high fraud • NOOPR - automated treatment, provide alerting tone only - no operator access • TP4NOPR-TP6NOPR, TP10NOPR-TP12NOPR, TP14NOPR, - automated treatment, provide alerting tone and prompting announcement 4-6, 10-12,14 - no operator access • SPL1 -SPL5 - automated treatment, special handling 1-5

TOPS OLNS Interface (continued)

Datafilling table OLNSDFLT

Field	Subfield or refinement	Entry	Explanation and action
SERVEQPT		POTS, LECPOST, RES1, RES2, LECSEMI, BUSFLAT, BUS1, BUS2, NCNNOIPP, NCNIPP, PRETCS, LECPRE, LECALT, ICSTD, ICALT, RESFLAT, VQNOTAX, VQTAX, IPSTD, IPALT, HOSPITAL, PRISON, AQNOTAX, AQTAX, DORM, CENTREX, PBX, PRSNIPP, WATS, CELL, PAGER, PCS, FGA, MOBILE, SPLPOST, SPLPRE, INCMPIF, CELLR1, CELLR2, BUSSL, BUSML, POST	Service Equipment. This field corresponds to the Originating Service/Equipment Indicator received from the OLNS database. This indicator provides the calling station type. The default is POTS. The values are defined as follows: • POTS - POTS line, business/residential • LECPOST - LEC public, standard interface, postpay overtime Public, standard interface indicates a set with the functions rating, coin detection, coin signaling, and announcements. Signalling from the network controls these functions. Postpay overtime indicates a coin phone that allows the customer to talk for the initial period. The system prompts the customer for payment for the previous period. Payment occurs after the correct time interval of a call. • RES1, RES2 - POTS line; residential; message rate 1, 2 Flat rate, message rate 1, and message rate 2 indicate the rate that applies to the line. The Real Time Rating System uses this rate to determine the rate for a call. • LECSEMI - LEC semi-public. This entry indicates that the originating station is a coin phone that an LEC (operating company) owns. The LEC and location provider have specified arrangements.

TOPS OLNS Interface (continued)

Datafilling table OLNSDFLT

Field	Subfield or refinement	Entry	Explanation and action
SERVEQPT (continued)			Service Equipment (continued). The values are defined as follows: • BUSFLAT - POTS line, business, flat rate • BUS1, BUS2 - POTS line; business; message rate 1, 2 • NCNNOIPP - coinless (non-IPP) • NCNIPP - coinless (IPP) The IPP refers to a public station that an independent payphone provider (ipp) owns. These sets were called customer owned coin operator telephones (COCOTs). • PRETCS - LEC prepaid, telecommunications card station: - This entry indicates a coinless set that an LEC owns that accepts pre-paid cards, like cash cards. • LECPRE - LEC public, standard interface, prepay overtime Prepay overtime indicates a coin phone that allows the customer to talk for the initial period. The system prompts the customer to pay before the next time duration. The customer pays for all time intervals for a call before they occur. • LECALT - LEC public, alternate interface. This entry indicates a set with the functions rating, coin detection, coin signaling and announcements. These functions are in the set and are controlled locally. • ICSTD - IC public, standard interface • ICALT - IC public, alternate interface • RESFLAT - POTS line, residential, flat rate

TOPS OLNS Interface (continued)

Datafilling table OLNSDFLT

Field	Subfield or refinement	Entry	Explanation and action
SERVEQPT (continued)			Service Equipment (continued). The values are defined as follows: • VQNOTAX - voice quote, without tax • VQTAX - voice quote, with tax • IPSTD - IPP, standard interface • IPALT - IPP, alternate interface • HOSPITAL - hospital • PRISON - prison (non-IPP) • AQNOTAX - auto quote, without tax • AQTAX - auto quote, with tax • DORM - dormitory line • CENTREX - Centrex line • PBX - PBX line • PRSNIPP - prison (IPP) • WATS - WATS line • CELL - cellular • PAGER - pager • PCS - personal communications service (PCS) • FGA - Feature Group A • MOBILE - mobile • SPLPOST - LEC public, special billing, post-pay overtime • SPLPRE - LEC public, special billing, pre-pay overtime

TOPS OLNS Interface (continued)

Datafilling table OLNSDFLT

Field	Subfield or refinement	Entry	Explanation and action
SERVEQPT (continued)			Service Equipment (continued). The values are defined as follows: • INCMPIF - public, incompatible network interface • CELLR1, CELLR2 - cellular; rate 1, 2 • BUSSL - POTS line, business, single-line • BUSML - POTS line, business, multi-line • POST - public, postpay
TASENTPD		SCRND, ALLOW, DOM, IAPYMT, IACUST, DISALL	Toll and assist bill to sent-paid calls. The following are the values: • SCRND - not available because LIDB data screening • ALLOW - allowed for the calling number (This is the default value.) • DOM - allowed for domestic • IAPYMT - allowed for intraLATA calls because of non-payment • IACUST - allowed for intraLATA calls at customer request • DISALL - not allowed for the calling number
TACOLL		SCRND, ALLOW, DOM, DISALL	Toll and assist collect billing calls. The following are the values: • SCRND - not available because of LIDB data screening • ALLOW - allowed for the calling number. This entry is the default value. • DOM -allowed for domestic • DISALL - not allowed for the calling number

TOPS OLNS Interface (continued)

Datafilling table OLNSDFLT

Field	Subfield or refinement	Entry	Explanation and action
TATHIRD		SCRND, ALLOW, DOM, DISALL, OPR, OPRAUTO	Toll and assist bill to third number calls. The following are the values: • SCRND - not available because of LIDB data screening • ALLOW - allowed for the calling number This entry is the default value. • DOM -allowed for domestic • DISALL - not allowed for the calling number • OPR - allowed with live operator • OPRAUTO - allowed with operator or automated verification
TACCARD		SCRND, ALLOW, DOM, DISALL, CIRLCL, CIRIA, CIR, NDCIRLCL, NDCIRIA, NDCIR	Toll and assist bill to credit card calls. The values are as follows: • SCRND - not available because of LIDB data screening • ALLOW - allowed for the calling number. This entry is the default value. • DOM -allowed for domestic • DISALL - not allowed for the calling number • CIRLCL - card issuer limits for local calls • CIRIA - card issuer limits for intraLATA, non-local calls • CIR - card issuer restrictions • NDCIRLCL - non-domestic calls not allowed and card issuer restrictions for intraLATA, non-local calls • NDCIRIA - non-domestic calls not allowed and card issuer limits for intraLATA, non-local calls • NDCIR - non-domestic calls not allowed and card issuer limits

TOPS OLNS Interface (continued)

Datafilling table OLNSDFLT

Field	Subfield or refinement	Entry	Explanation and action
TABNS		SCRND, ALLOW, DISALL	Toll and assist alternate billing that the called party pays equivalent to SPL CLD. The values are as follows: • SCRND - not available because of LIDB data screening • ALLOW - allowed for the calling number. This entry is the default value. • DISALL - not allowed for the calling number
DACC		SCRND, ALLOW, DISALL, RSTR, LCL, NOSTPD	Directory assistance call completion. The system determines if billing is allowed on the call completion part of a DACC call. The values are as follows: • SCRND - not available because of LIDB data screening • ALLOW - allowed for the calling number. This entry is the default value. • DISALL - not allowed for the calling number • RSTR - allowed from this line with billing limits for toll and non-toll calls • LCL - allowed from this line for local, non-toll calls. This value indicates that call completion is toll free. • NOSTPD - allowed from this line for alternate billed calls - no sent paid. This value indicates the system does not allow station paid billing on the call completion. The system allows all other actions.
DASENTPD		SCRND, ALLOW, DISALL	Directory assistance bill to sent-paid calls. The values are as follows: • SCRND - not available because of LIDB data screening • ALLOW - allowed for the calling number. This is the default value. • DISALL - not allowed for the calling number

TOPS OLNS Interface (continued)

Datafilling table OLNSDFLT

Field	Subfield or refinement	Entry	Explanation and action
DATHIRD		SCRND, ALLOW, DISALL, OPR, OPRAUTO	Directory assistance bill to third number calls. The values are as follows: • SCRND - not available because of LIDB data screening • ALLOW - allowed for the calling number. This is the default value. • DISALL - not allowed for the calling number • OPR - allowed with live operator • OPRAUTO - allowed with operator or automated verification
DACCARD		SCRND, ALLOW, DISALL, CIR	Directory assistance bill to credit card calls. The values are as follows: • SCRND - not available because of LIDB data screening • ALLOW - allowed for the calling number. This is the default value. • DISALL - not allowed for the calling number • CIR - card issuer restrictions
DABNS		SCRND, ALLOW, DISALL	Directory assistance alternate billing that the called party pays. This value equals the SPL CLD. The values are as follows: • SCRND - not available because of LIDB data screening • ALLOW - allowed for the calling number. This entry is the default value. • DISALL - not allowed for the calling number

Datafill example for table OLNSDFLT

Sample datafill for table OLNSDFLT appears in the following example.

TOPS OLNS Interface (continued)

MAP example for table OLNSDFLT

```
IDX  TRTMT   SERVEQP  TASENTPD  TACOLL  TATHIRD   TACCARD  TABNS
DACC   DASENTPD  DATHIRD  DACCARD  DABNS
-------------------------------------------------------------------
0    TONEP2  POTS1    DISALL    ALLOW   ALLOW     ALLOW    ALLOW
ALLOW  ALLOW     ALLOW    ALLOW    ALLOW
```

In the above tuple, field TRTMT is TONEP2. The TONE2 is tone and prompt 2. Field SERVEQP is POTS1. This field is a POTS line for business or residential.

Error messages for table OLNSDFLT

The following error messages apply to table OLNSDFLT.

Error messages for table OLNSDFLT

Error message	Explanation and action
`Tuple is referenced by table OLNSERR.`	This error message appears If an attempt occurs to delete a tuple in table OLNSDFLT that table OLNSERR references.

Datafilling table OLNSERR

The OLNS query protocol data errors indexes the new table Originating Line Number Screening Error. Table OLNSERR provides an index to table OLNSDFLT to handle errors. In table OLNSERR, the error type and call type are the tuple key. The tuple data in table OLNSERR is an index to table OLNSDFLT. Data errors types are OLNS TCAP or SCCP errors. Data error types are also queries the system did not launch because of code gapping, screened not correct data, or timeout.

Enter data in table OLNSDFLT before table OLNSERR.

TOPS OLNS Interface (continued)

The following table describes the table ONLSERR:

Datafillling table OLNSERR

Field	Subfield or refinement	Entry	Explanation and action
KEY		see subfields ERROR and CLGSERV	Key to table. This field contains subfields ERROR and CLGSERV.
	ERROR	ACG, DATAERR, DATAUNAV, GTTFAIL, MISCERR, MISSGRP, MISSREC, MISROUTE, NETPROB, NONPARGRP PROTPROB, SCREENED, TIMEOUT, UNAVNETR, UNEXCOMP, UNEQUSER, UNEXDATA, VACANTGR	OLNS query error. The values are as follows: • ACG - Automatic Call Gapping (ACG), also called network management, is active • DATAERR - Data error- not in range of defined protocol values • DATAUNAV - Data not available • GTTFAIL - A GTT failure does not contain translation for this address type and does not contain translation for this specified address. • MISCERR - Miscellaneous error- if an error occurs that is not already defined error • MISSGRP - Missing group • MISSREC - Missing customer record • MISROUTE - Misroute • NETPROB - A network problem indicates a subsystem failure or congestion or network failure or congestion • NONPARGRP - Non-participating group • PROTPROB - A protocol problem occurs in a query message to the database. The OLNS LIDB sends a reject message to DMS when this condition occurs. • SCREENED - Screened data • TIMEOUT - A database response does not occur in timeout period

TOPS OLNS Interface (continued)

Datafillling table OLNSERR

Field	Subfield or refinement	Entry	Explanation and action
	ERROR (continued)		OLNS query error (continued). The values are as follows: • UNAVNETR - Unavailable network resource • UNEXCOMP - Unequipped user • UNEQUSER - Unexpected Component Sequence • UNEXDATA - Unexpected data value • VACANTGR - Vacant group
	CLGSERV	STATION, SPECIAL, HOTEL, COIN, MOBILE, OTHER	Calling service type. The on signaling information and OLNS response message information determines the calling service type.
DFLTIDX		0 to 99	Table OLNSDFLT index. This table indexes to table OLNSDFLT error handling.

Datafill example for table OLNSERR

Default datafill for table OLNSERR appears in the following example. All default datafill is added at IPL. The tuples can be changed. The tuples cannot be deleted.

TOPS OLNS Interface (continued)

MAP display of default data for table OLNSERR

```
KEY                    DFLTIDX
-------------------------------------------------------
ACG STATION             0
ACG SPECIAL             0
ACG HOTEL               0
ACG COIN                0
ACG MOBILE              0
ACG OTHER               0
DATAERR STATION         0
DATAERR SPECIAL         0
DATAERR HOTEL           0
DATAERR COIN            0
DATAERR MOBILE          0
DATAERR OTHER           0
DATAUNAV STATION        0
DATAUNAV SPECIAL        0
DATAUNAV HOTEL          0
DATAUNAV COIN           0
DATAUNAV MOBILE         0
DATAUNAV OTHER          0
GTTFAIL STATION         0
GTTFAIL SPECIAL         0
GTTFAIL HOTEL           0
GTTFAIL COIN            0
GTTFAIL MOBILE          0
GTTFAIL OTHER           0
MISCERR STATION         0
MISCERR SPECIAL         0
MISCERR HOTEL           0
MISCERR COIN            0
MISCERR MOBILE          0
MISCERR OTHER           0
MISSGRP STATION         0
MISSGRP SPECIAL         0
MISSGRP HOTEL           0
MISSGRP COIN            0
MISSGRP MOBILE          0
MISSGRP OTHER           0
```

TOPS OLNS Interface (continued)

MAP display of default data for table OLNSERR (continued)

```
KEY                    DFLTIDX
-------------------------------------------------------
MISSSREC STATION         0
MISSSREC SPECIAL         0
MISSSREC HOTEL           0
MISSSREC COIN            0
MISSSREC MOBILE          0
MISSSREC OTHER           0
MISROUTE STATION         0
MISROUTE SPECIAL         0
MISROUTE HOTEL           0
MISROUTE COIN            0
MISROUTE MOBILE          0
MISROUTE OTHER           0
NETPROB STATION          0
NETPROB SPECIAL          0
NETPROB HOTEL            0
NETPROB COIN             0
NETPROB MOBILE           0
NETPROB OTHER            0
NONPARGR STATION         0
NONPARGR SPECIAL         0
NONPARGR HOTEL           0
NONPARGR COIN            0
NONPARGR MOBILE          0
NONPARGR OTHER           0
PROTPROB STATION         0
PROTPROB SPECIAL         0
PROTPROB HOTEL           0
PROTPROB COIN            0
PROTPROB MOBILE          0
PROTPROB OTHER           0
SCREENED STATION         0
SCREENED SPECIAL         0
SCREENED HOTEL           0
SCREENED COIN            0
SCREENED MOBILE          0
SCREENED OTHER           0
```

TOPS OLNS Interface (continued)

MAP display of default data for table OLNSERR (continued)

```
KEY                    DFLTIDX
-------------------------------------------------------
TIMEOUT STATION          0
TIMEOUT SPECIAL          0
TIMEOUT HOTEL            0
TIMEOUT COIN             0
TIMEOUT MOBILE           0
TIMEOUT OTHER            0
UNAVNETR STATION         0
UNAVNETR SPECIAL         0
UNAVNETR HOTEL           0
UNAVNETR COIN            0
UNAVNETR MOBILE          0
UNAVNETR OTHER           0
UNEXCOMP STATION         0
UNEXCOMP SPECIAL         0
UNEXCOMP HOTEL           0
UNEXCOMP COIN            0
UNEXCOMP MOBILE          0
UNEXCOMP OTHER           0
UNEQUSER STATION         0
UNEQUSER SPECIAL         0
UNEQUSER HOTEL           0
UNEQUSER COIN            0
UNEQUSER MOBILE          0
UNEQUSER OTHER           0
UNEXDATA STATION         0
UNEXDATA SPECIAL         0
UNEXDATA HOTEL           0
UNEXDATA COIN            0
UNEXDATA MOBILE          0
UNEXDATA OTHER           0
VACANTGR STATION         0
VACANTGR SPECIAL         0
VACANTGR HOTEL           0
VACANTGR COIN            0
VACANTGR MOBILE          0
VACANTGR OTHER           0
```

TOPS OLNS Interface (continued)

Error messages for table OLNSERR

The following error messages apply to table OLNSERR.

Error messages for table OLNSERR

Error message	Explanation and action
`Tuples cannot be added or deleted.`	If an attempt occurs to add or delete a tuple in table OLNSDFLT, the system does not allow the action. This error message appears.
The referenced tuple is not entered in table OLNSERR.	An attempt can occur to change a tuple in table OLNSDFLT when the referenced tuple is not present in table OLNSERR. When this condition occurs the system does not allow the change and this message appears.

Datafilling table TOPSTOPT

Table TOPSTOPT adds the new field OLNSQRY.

The following table describes the datafill that relates to The TOPS OLNS Interface for table TOPSTOPT. The fields that apply to The TOPS OLNS

Interface appear. Refer to the data schema section of this document for a description of the other fields.

Datafilling table TOPSTOPT

Field	Subfield or refinement	Entry	Explanation and action
OLNSQRY		NONE or ALL	Originating Line Number Screening Query. This field indicates which calls can launch a query on a specified incoming trunk. The values are as follows: • NONE - The OLNS queries do not occur for incoming calls. • ALL - The OLNS queries on all calls before the calls arrive at the operator position. This condition does not apply to intercept and inwards calls. For these two call types, OLNS queries do not occur. The OLNS queries do not occur because the system does not signal the subscriber calling number to the DMS switch. For the ALL condition, if the call is ONI or ANI fail, the system launches the query automatically. This action occurs when the operator at position enters the calling number. Only one OLNS query occurs for a call. A minimum of one OLNS query can occur when changes occur to the calling number. This action can occur for ONI or ANI fail calls.

Datafill example for table TOPSTOPT

Sample datafill for table TOPSTOPT appears in the following table.

MAP example for table TOPSTOPT

```
GRPKEY ACDDATA          DISPLCLG  ADASERV  ADASANS  ANITOCLI  OLNSQRY
                                                             DCIBIDX
-------------------------------------------------------------------------
TRK1   TOPSACD            Y        NONE     NA       N         NONE
                                                             0
TRK2   QMSCAM CORECAM N   Y        NONE     NA       N         ALL
                                                             0
```

TOPS OLNS Interface (continued)

Datafilling table TOPAMAOP

Table TOPAMAOP adds a new field. The following table describes this field:

Datafilling table TOPAMAOP

Field PARMNAME	Field PARMVAL	Explanation and action
RECORD_ORIG_BILLING_SERVICE	Y or N	Record Originating Billing Service. This field specifies if the system must generate module codes 019 or 219 for calls that have an OLNS query launched. The values can be Y and N. If set to Y, module code 019 or 219 adds to AMA records with structure code 0772.

Datafill example for table TOPAMAOP

Sample datafill for table TOPAMAOP appears in the following example.

MAP example for table TOPAMAOP

```
AMAOPT                                  OPTINFO
-------------------------------------------------------
RECORD_ORIG_BILLING_SERVICE              Y
```

Datafilling table TOPSPARM

Table TOPSPARM adds new parameters. The following table describes these parameters:

Datafilling table TOPSPARM

Field PARMNAME	Field PARMVAL	Explanation and action
OLNS_EAANI_DACC	Y or N	This parameter determines if the system considers the DACC indicator. This condition occurs when the system determines what ANI ID digits to spill to the carrier on interLATA calls. The values can be Y and N. Enter Y to consider the DACC indicator. See section "Spilling ANI ID to carrier on InterLATA calls" for additional information.
OLNS_EAANI_ADD_BILLSRV	Y or N	This parameter determines if the system considers the Additional Originating Billing Services Indicator. This condition occurs when the system determines what ANI ID digits to spill to the carrier on interLATA calls. The values can be Y and N. Enter Y to consider the DACC indicator. See section "Spilling ANI ID to carrier on InterLATA calls" for additional information.

TOPS OLNS Interface (continued)

Datafilling table TOPSPARM

Field PARMNAME	Field PARMVAL	Explanation and action
OLNS_ TIMEOUT	1 to 15	This parameter indicates the timeout period in seconds for an OLNS response message. This value can range from 1 s to 15 s with a default value of 2 s.
OLNS_ RESTRICTED_ DACC	Y or N	This parameter determines if the system restricts when an ANI ID 7 is signaled. The values are as follows: • Y - The system checks TA and DA indicators. The TA indicators are sent paid, collect, third, calling card, and special BNS. The DA indicators are sent paid, collect, third, calling card, special BNS and DACC. • N - The system checks TA and DA indicators. The TA indicators are sent paid, collect, third, calling card, and special BNS. The DA indicators are sent paid, collect, third, calling card, and special BNS. Error handling applies to calls that do not have billing limits the system signals with an ANI ID 7. The system handles these calls as ANIF and routes the calls to an operator. The system generates a TRK118 log. ***Note:*** This parameter does not automatically appear in the table, it must be added.

Datafill example for table TOPSPARM

Sample datafill for table TOPSPARM appears in the following example.

MAP example for table TOPSPARM

```
PARMNAME                                  PARMVAL
--------------------------------------------------------
OLNS_EAANI_ADD_BILLSRV                        Y
OLNS_EAANI_DACC                               Y
OLNS_TIMEOUT                                  2
OLNS_RESTRICTED_DACC                          Y
```

TOPS OLNS Interface (continued)

Datafilling table TDBCLASS

This table does not have changes. The following table indicates the datafill that must remain or can be deleted.

Datafilling table TDBCLASS

Field	Subfield or refinement	Entry	Explanation and action
TDBCLSEL	SEL	AQTAC, VQHTL, COIN DUAQHTL, DUAQTAC, AQHTL, NOSPLDNI, RSTRCTD	TOPS Database control selector. Retain tuples when field SEL = AQTAC, VQHTL, DUAQHTL, DUAQTAC, or AQHTL. Delete tuples when field SEL = COIN, RSTRCTD, or NOSPLDNID.
ARANSEL		Y or N	Automated Room and Authorization Number. This field specifies if automatic room or authorization number validation applies. This field applies only when TDBCLSEL is a hotel device and causes this functionality to remain. For further information on this functionality, refer to Automated Room and Authorization Number, ABS00101.
EAANI		Y or N	Equal Access Automatic Number Identification. This field is for carrier calls that signal a restricted ANI ID digit on the incoming side to force a look up. These calls do not always outpulse a restricted ANI ID digit on the outgoing side. If this field is Yes (Y), retain the tuple. Loss of this functionality occurs if the OLNSL is active. For additional information on this functionality, refer to TOP DN Call Screening, ABS00101.
BLKCLI		Y or N	Block CLLI. This field specifies if caller id blocking applies to the line. Retain the datafill if the office uses this feature (AN0175). This feature is in functionality ISUP to TOPS, OSEA0005.

Datafill example for table TDBCLASS

Sample datafill for table TDBCLASS appears in the following example.

MAP example for table TDBCLASS

```
IDX   TDBCLSEL   ARAN  EAANI  BLKCLI
-------------------------------------------------------
5     NOSPLDNID   N     N     Y
```

The above tuple can be deleted because field TDBCLSEL = NOSPLDNID. Normally, tuples can be deleted when the restricted data is in the OLNS response.

Datafilling table TOPSDB

This table does not have changes. The datafill that must remain or can be deleted appears in the following table.

Datafilling table TOPSDB

Field	Subfield or refinement	Entry	Explanation and action
TDBIDX	IDX	0 to 32767	TOPS Database Index. This TOPSDB tuple can be removed if field TDBCLIDX points to a TDBCLASS tuple that can be removed. The TOPSDB fields that remain mus point to default tuples for this action occur.
TDBCLIDX		0 to 1000	TOPS Database Class Index. This field is an index into table TDBCLASS. This field must point to a TDBCLASS tuple that can be deleted before this table TOPSDB tuple is deleted.
TDBDAOPT		0	TOPS Database DA Options. This field is an index to table TDBDAOPT. This field must be 0 before this TOPSDB tuple can be deleted. The value 0 points to the default TDBDAOPT.
TDBNORM		0	TOPS Database Normalization. This field is an index to table TDBNORM. This field must be 0 before this TOPSDB tuple can be deleted. The value 0 points to the default TDBNORM .

TOPS OLNS Interface (continued)

Datafilling table TOPSDB

Field	Subfield or refinement	Entry	Explanation and action
TDBSERV		0	TOPS Database service. This field is an index to table TDBSERV. This field must be 0 before this TOPSDB tuple can be deleted. The value 0 points to the default TDBSERV.
OAFUNBLK		0	OSSAIN Function Blocking. This field is an index to table OAFUNBLK. This field must be 0 before this TOPSDB tuple can be deleted. The value 0 points to the default OAFUNBLK .

Datafill example for table TOPSDB

Sample datafill for table TOPSDB appears in the following example.

MAP example for table TOPSDB

```
TDBKEY   TDBCLIDX   TDBDAOPT TDBNORM   TDBSERV   OAFUNBLK
-------------------------------------------------------
5         5          0         0         0         0
```

MAP example for table TDBCLASS

```
IDX    TDBCLSEL    ARAN   EAANI
-------------------------------------------------------
5      NOSPLDNID    N     N
```

In the above examples, the table TOPSDB tuple can be deleted. This condition occurs because TDBCLIDX points to TDBCLASS tuple 5 that can be deleted. A TOPSDB tuple can be removed if the OLNS response query or default values provide the data in the subtending tables.

Datafilling table DNSCRN

This table does not have changes. The following table indicates the datafill that must remain or can be deleted.

Datafilling table DNSCRN

Field	Subfield or refinement	Entry	Explanation and action
ATTROPTS		TOPSDB	Screening attribute options. If this field is TOPSDB, this tuple can be deleted. Check subfield TOPSDB for a determination.
	TOPSDB	0 to 32767	TOPS Database. This database is an index to table TOPSDB. If this field points to a table TOPSDB tuple that can be deleted, table DNSCRN tuple can be deleted.
	AUTHGRP	0 to 32767	Authorization Group. This group is an index to table AUTHGRP. This field must be 0 to delete this TOPSDB tuple. The value is 0 points to the default AUTHGRP tuple

Datafill example for table DNSCRN

Sample datafill for table DNSCRN appears in the following example.

MAP example for table DNSCRN

```
DN                                                ATTROPTS
-------------------------------------------------------------
6193205555                                     TOPSDB 5 0$
```

The above tuple can be deleted because the table TOPSDB tuple 5 can be deleted. This action occurs because field AUTHGRP indicates the default tuple in table AUTHGRP. Normally, tuples can be deleted if the OLNS response query or default values provide the data in the subtending tables.

TOPS OLNS Interface (continued)

Datafilling table DNPIC

This table does not have changes. The following table indicates the datafill that must remain or can be deleted.

Datafilling table DNPIC

Field	Subfield or refinement	Entry	Explanation and action
DNKEY			Directory Number. This number is the key to the table. In a DMS-100/200 office and not LEAS, this table must remain if the 100 side of the office uses this datafill.
CHOICE		Y or N	Carrier Toll Denied. This field indicates if the subscriber can use 10XXX(X) dialing that requires LEAS in the end office. If this field is set to Y, associated datafill occurs in the end office. The tuple must remain.
CTD		see subfields	Carrier toll denied. This field contains subfields CTDSEL and CARRIERS.
	CTDSEL	Y or N	Carrier Toll Selector. This field indicates a list of carriers that have denied service to this subscriber. This field only applies to offices with the LEAS package. If this field is set to Yes (Y), this tuple must remain.
	CARRIERS	up to 21 multiples	Carriers. This field lists the carriers that denied service to this subscriber. If CTDSEL = Y, the values in this field are required. This tuple must remain.

Datafill example for table DNPIC

Sample datafill for table DNPIC appears in the following table.

MAP example for table DNPIC

```
DNKEY           DNPIC    CHOICE   CTD
-------------------------------------------------------
619 320 11 11    C222     Y       N
619 320 22 22    C333     N       Y  C888
```

The above tuples cannot be deleted because CHOICE and CTD are not both N.

Datafilling table SPLDNID

This table does not have changes. The following table indicates the datafill that must remain or can be deleted.

Datafilling table SPLDNID

Field	Subfield or refinement	Entry	Explanation and action
SPLSEL	SEL	AQTAC, VQHTL, COIN DUAQHTL, DUAQTAC, AQHTL, NOSPLDNID RSTRCTD	Special Directory Number identification selector. Retain tuples when field SEL = AQTAC, VQHTL, DUAQHTL, DUAQTAC, or AQHTL. All other tuples can be deleted. These tuples are SEL = COIN, RSTRCTD, or NOSPLDNID.

Datafill example for table SPLDNID

Sample datafill for table SPLDNID appears in the following field.

MAP example for table SPLDNID

```
SPLDN                SPLSEL
-------------------------------------------------------
6193201111           RSTRCTD 11
6193202222           COIN STD ACTS Y 12
619320333            AQHTL 21 N
```

In the above example, the first 2 tuples can be deleted because field SEL = RSTRCTD and COIN. The OLNS provides restricted and coin information. The ACTS and STD for coin phones are assumed. Device AQHTL is not in the OLNS response.

TOPS OLNS Interface (continued)

Datafilling table RESTBIL

This table is not changed. The following table indicates the datafill that must remain or can be deleted.

Datafilling table RESTBIL

Field	Subfield or refinement	Entry	Explanation and action
BILCLASS		0 to 100	Billing Class. Index to table. Retain tuples when this index is from table SPLDNID where field SEL is AQTAC, VQHTL, DUAQHTL, DUAQTAC, or AQHTL. All other tuples in table SPLDNID, field SEL = COIN, RSTRCTD, or NOSPLDNID can be deleted.

Datafill example for tables RESTBIL and SPLDNID

Sample datafill for tables RESTBIL and SPLDNID appears in the following table.

MAP example for table SPLDNID

```
SPLDN                SPLSEL
-------------------------------------------------------
6193201111           RSTRCTD 11
6193202222           COIN STD ACTS Y 12
619320333            AQHTL 21 N
```

MAP example for table RESTBIL

```
BILCLASS AMARBC SCRNDISP  BILTYPES              CCPDTYPS
-------------------------------------------------------
11       1     NOCOL     PD CC 3RD SPLCLG$       NONE
12       1     HOSPITAL  CC 3RD SPLCLGSPLCLD$    ALL
```

The above two tuples in table RESTBIL can be deleted because table SPLDNID field SEL = RSTRCTD and COIN for the associated tuples. Normally, tuples can be removed when the restricted data is in the OLNS response.

Datafilling table DARSTBIL

This table does not have changes. The following table indicates the datafill that must remain or can be deleted.

Datafilling table DARSTBIL

Field	Subfield or refinement	Entry	Explanation and action
BILCLASS		0 to 100	Billing Class. Index to table. Retain tuples when this index is from table SPLDNID where field SEL is AQTAC, VQHTL, DUAQHTL, DUAQTAC, or AQHTL. All other tuples in table SPLDNID, field SEL = COIN, RSTRCTD, or NOSPLDNID can be deleted.

Datafill example for tables DARSTBIL and SPLDNID

Sample datafill for tables RESTBIL and SPLDNID appears in the following example.

MAP example for table SPLDNID

```
SPLDN                SPLSEL
-------------------------------------------------------
6193201111           RSTRCTD 11
6193202222           COIN STD ACTS Y 12
619320333            AQHTL 21 N
```

MAP example for table DARSTBIL

```
BILCLASS AMARBC SCRNDISP  BILTYPES
-------------------------------------------------------
11       1     NOCOL     PD CC 3RD SPLCLG$
12       1     HOSPITAL  CC 3RD SPLCLGSPLCLD$
```

The above two tuples in table DARSTBIL can be deleted because table SPLDNID field SEL = RSTRCTD and COIN for the associated tuples. Normally, the tuples can be removed when the restricted data is in the OLNS response.

Datafilling table C7GTTYPE

Datafill for the TOPS OLNS Interface for table C7GTTYPE appears in the following table. The fields that apply to TOPS OLNS Interface appear in this

TOPS OLNS Interface (continued)

table. See the data schema section of this document for a description of the other fields.

Datafilling table C7GTTYPE

Field	Subfield or refinement	Entry	Explanation and action
GTTID		OLNSGT	Global title translation identifier. New translations name OLNSGT can be entered as data.

Datafill example for table C7GTTYPE

Sample datafill for table C7GTTYPE appears in the following example.

MAP example for table C7GTTYPE

```
GTTNAME  GTTYPE     GTTID
-------------------------------------------------------
OLNSGT   ANSI7 11   OLNSGT$
```

Datafilling table C7NETSSN

Datafill for the TOPS OLNS Interface for table C7NETSSN appear in the following table. The fields that apply to TOPS OLNS Interface appear in this table. See the data schema section of this document for a description of the other fields.

Datafilling table C7NETSSN

Field	Subfield or refinement	Entry	Explanation and action
SSNAMES	SSNAME	OLNS	Subsystem name. New subsystem name OLNS can be entered as data.

Datafill example for table C7NETSSN

Sample datafill for table C7NETSSN appears in the following example.

MAP example for table C7NETSSN

```
PCNAME      SSNAMES
-------------------------------------------------------
RTESET1     OLNS 197
```

Datafilling table C7LOCSSN

Datafill for TOPS OLNS Interface for table C7LOCSSN appears in the following table. The fields that apply to the TOPS OLNS Interface appear in this table. See the data schema section of this document for a description of the other fields.

Datafilling table C7LOCSSN

Field	Subfield or refinement	Entry	Explanation and action
SSNAME		OLNS	Subsystem name. New subsystem name OLNS can be entered as data.

Datafill example for table C7LOCSSN

Sample datafill for table C7LOCSSN appear in the following example.

MAP example for table C7LOCSSN

```
SSNAME  SSNUMBER  NIMINST  REPLINFO  TFMI  PCNAMES
------------------------------------------------------
OLNS    197        1        N         N    $
```

Datafilling table C7RPLSSN

Datafill for TOPS OLNS Interface for table C7RPLSSN appears in the following table. The fields that apply to the TOPS OLNS Interface appear in this table. See the data schema section of this document for a description of the other fields.

Datafilling table C7RPLSSN

Field	Subfield or refinement	Entry	Explanation and action
SSNAME		OLNS	Subsystem name. New subsystem name OLNS can be entered as data.

Datafill example for table C7RPLSSN

Sample datafill for table C7RPLSSN appears in the following example.

TOPS OLNS Interface (continued)

MAP example for table C7RPLSSN

```
SSNAME   REPLIST
--------------------------------------------------------
OLNS     RTESET1 RTESET2 N$
```

Datafilling table C7GTT

Datafill for TOPS OLNS Interface for table C7GTT appears in the following table. The fields that apply to the TOPS OLNS Interface appear in this table. See the data schema section of this document for a description of the other fields.

Datafilling table C7GTT

Field	Subfield or refinement	Entry	Explanation and action
GTTRSLT	RESULT	OLNS	Global title translations result. New subsystem name OLNS can be entered as data.

Datafill example for table C7GTT

Sample datafill for table C7GTT appears in the following example.

MAP example for table C7GTT

```
GTTKEY       GTTRSLT
--------------------------------------------------------
OLNSGT 09    PCSSN (RTESET2 OLNS 0)$ SSN
```

Tools for verifying translations

The MAP display provides a new CI increment, OLNS verification (OLNSVER). The OLNSVER starts OLNS queries and checks the response messages. This action allows the system to test external OLNS database and does not require a real call to initiate. The OLNS CI Tool uses the same interface as a regular TOPS Call Process. This interface sends queries and does not start a TOPS Call Process.

The SOC must turn the OLNS functionality to ON to enter this increment.

A description of the commands appears at the end of this section.

The steps to use OLNSVER are as follows:

1. enter OLNSVER
2. use help and query commands as necessary
3. set up the parameters
4. launch query and examine results
5. examine response message received from the OLNS LIDB
6. quit OLNSVER

Enter OLNSVER

Enter OLNSVER at the MAP display as follows:

```
CI:

>OLNSVER <cr>

OLNSVER:

For a list of available commands type: COMMANDS<cr>.

>
```

If the SOC state for Base OLNS is not ON, the following error message appears:

```
CI:

>OLNSVER

The TOPS OLNS Interface SOC state (ABS00012) must be ON to
access the OLNSVER tool.

>
```

Only one user at a time can use this OLNSVER increment. If a second user attempts to access the OLNSVER tool, the following error message appears. The message appears with the name of the user of the OLNSVER tool:

```
CI:

> OLNSVER

OLNSVER is already in use by ADMIN

>
```

TOPS OLNS Interface (continued)

Help and query commands

The following commands provide assistance during OLNSVER:

- COMMANDS - lists available commands
- HELP OLNSVER - gives a description of OLNSVER and a list of available commands
- Q OLNSVER - same as HELP OLNSVER command
- HELP <command> - describes entered command
- QACG <clg no> - indicates if Automatic Call Gapping is active for calling number.
- SHOW - lists all values of the parameter. Parameters define call characteristics sent in query.

Set up the parameters

The following commands define or display (if no argument is entered) the parameters and other characteristics of the query:

- RESET - set default values for all parameters
- CICEXP <Y/N> - set CIC expansion indicator
- CLGNO <clg no> - set calling number.
- CLGSERV <clg service> - set calling party service
- ILPREQ <Y/N> - enable sending of intraLATA presubscription (ILP) indicator
- TIMEOUT <seconds> - set maximum waiting period for OLNS reply
- TRACE <ON/OFF/CLEAR> - This parameter enable or disables the process to save response messages in trace buffer. Clear trace buffer. The buffer must be cleared (CLEAR) and enabled (ON) before the system launches a query. The system launches a query to check the response messages after the query. This command TRACE also has a DISPLAY parameter that can display messages in the trace buffer after the query. The DISPLAY parameter does not clear the trace buffer.

Launch query and examine results

Enter command SEND to launch the query.

Successful query

If the query completes without errors, the SEND command displays the following:

- Billing/services information
- Billing/services DA information
- ILP CIC number (optional based on ILP query parameter)
- ILP CIC Indicator (optional based on ILP query parameter)
- InterLATA carrier number (optional)
- International Carrier number (optional)
- Originating IC indicators
- Originating IC
- Service/equipment
- Treatment
- Alphanumeric string (optional)
- A maximum of five card issuer blocking codes that are not allowed (optional)
- Foreign language (optional)
- Any ACG information received

Note: Automatic Code Gapping is an optional message that can be sent by the OLNS LIDB in the response message. This message contains a Control Cause. The Control Cause gives the reason ACG is in effect and a Duration of how long ACG controls are in effect. The Control Cause also gives a Gap of how often a message can be sent out.

A sample display appears in the following example:

TOPS OLNS Interface (continued)

MAP example of successful OLNSVER query

```
OLNSVER:
>SEND<cr>
Sending OLNS query...
Billing/Services Indicator:
   Collect = Allowed
   Third   = Allowed
   Free TA = Allowed
   CC      = Allowed
   Free DA = Allowed
   Spl BNS = Allowed
   Sent Pd = Allowed
   DACC    = Allowed
   Spare   = Allowed
Treatment Ind  = Oper Trtmt, Cust Req
Serv/Equip Ind = POTS, Res, FR
Billing/Services DA Indicator:
   Third   = Allowed
   CC      = Allowed
   Spl BNS = Allowed
   Sent Pd = Allowed
InterLATA Carrier Ind:
   IC  = Indicated
   INC = Indicated
InterLATA Carrier = 2085
International Carrier = 3456
Alpha String = Elderly
Disallowed Card Issuer Codes:
   123456, 789012, 345678, 901234, 567890
Foreign Lang = Greek
Automatic Code Gap:
   Control Cause = Database Overload
   Duration      = 16 secs
   Gap           = 30 secs
Calling NPA–NXX  = 111111
```

If ACG information is received, this information appears and ACG controls are not set or cleared.

Unsuccessful query

If the query is not complete, the SEND command displays an error message with the formatted response message. If tables OLNSERR and OLNSDFLT provide the default data and error message, a display with the index used for OLNSDFLT appears.

An OLNSVER query that is not complete can display six different error messages:

- ACG Active - <additional text>: The ACG controls were active when the query occurred
- Query Failure - <additional text>: The system received an UDTS message or the system did not receive a response message in the timeout period
- Reject - <additional text>: The system received a reject message from the LIDB
- Response Error - <additional text>: The system detected an error in the response message received from the LIDB
- Return Error - <additional text>: The system detected a return error message from the LIDB
- Return Error with Problem Data - <additional text>: The system received a return error message with problem data from the LIDB

Unsuccessful query: query blocked by ACG controls

The query did not occur because ACG controls were active according to the first 6 digits of the calling party directory number. The query occurred during a period when ACG controls were active. The query occurred because the gap period specified did not stop after the last query. An error message appears with a formatted list of default indicators and values that tables OLNSERR and OLNSDFLT provide.

User action: When the ACG gap period stops, perform a query or wait until the ACG duration stops.

Note: The DMS switch does not send a query that the ACG controls can block. The "Sending OLNS query..." does not appear.

A sample display appears in the following examples:

TOPS OLNS Interface (continued)

MAP example of unsuccessful OLNSVER query (ACG Active: Query blocked by ACG controls)

```
OLNSVER:
>SEND<cr>
ACG Active – Query blocked by ACG controls for 619322
Default values used from table OLNSDFLT index key: 5
Billing/Services Ind:
   Collect = Allowed
   Third   = Allowed
   CC      = Allowed
   Spl BNS = Allowed
   Sent Pd = Allowed
   DACC    = Not Allowed
Treatment Ind = Tone
Serv/Equip Ind = POTS Res–Flat Rate
Billing/Services DA Ind:
   Third   = Allowed
   CC      = Allowed
   Spl BNS = Allowed
   Sent Pd = Allowed
```

Data error - default value derived

The response indicates the TOPS switch detected a data error. An example of data error is a value that is not in the range of supported protocol values. If the value is for a required OLNS response indicator, tables OLNSERR and OLNSDFLT provide the default value. The OLNS response indicator can be Billing Services Indicator, Treatment Indicator, Service/Equipment Indicator or Billing/Services DA Indicator. If the value is not for a required OLNS response indicator, the message Unknown appears with the received value. If the system encounters a minimum of two data errors in a response message, the complete response message uses default data.

The following example describes a detected error. In this example, the data is not in the range of defined protocol values. The OLNS LIDB response messages return these values for a required response indicator. The system considers the indicator value as a data error. The value appears with the default value that tables OLNSERR and OLNSDFLT provide. Additional ACG information also appears.

User action: Check for hardware or software problems on the OLNS LIDB.

A sample display appears in the following example:

TOPS OLNS Interface (continued)

MAP example of unsuccessful OLNSVER query (Response Error: Data Error in OLNS response - default value derived for an indicator)

```
OLNSVER:
>SEND<cr>
Response Error – Data Error, out of range value detected
in OLNS response...
Default values used from table OLNSDFLT index key: 0
Billing/Services Indicator:
   Collect = Allowed
   Third   = Allowed
   Free TA = Allowed
   CC      = Unknown, 12
           = Default – Allowed
   Free DA = Allowed
   Spl BNS = Allowed
   Sent Pd = Allowed
   DACC    = Allowed
   Spare   = Allowed
Treatment Ind  = Oper Trtmt, Cust Req
Serv/Equip Ind = POTS, Res, FR
Billing/Services DA Indicator:
   Third   = Allowed
   CC      = Allowed
   Spl BNS = Allowed
   Sent Pd = Allowed
InterLATA Carrier Ind:
   IC  = Indicated
   INC = Not Indicated
InterLATA Carrier = 2085
Alpha String = Elderly
Disallowed Card Issuer Codes:
   123456, 789012, 345678, 901234, 567890
Foreign Lang = Greek
```

An example of the detection of a minimum of two data errors in the OLNS response message appears in the following example. Default data is derived for all the required indicators.

TOPS OLNS Interface (continued)

MAP example of unsuccessful OLNSVER query (Response Error: Data Error in OLNS response - default value derived for all indicators)

```
OLNSVER:
>SEND<cr>
Sending OLNS query...
Response Error – Data Error, out of range value detected
in OLNS response...
Default values used from table OLNSDFLT index key: 0
Billing/Services Indicator:
   Collect = Allowed
   Third   = Allowed
   CC      = Allowed
   Spl BNS = Allowed
   Sent Pd = Allowed
   DACC    = Allowed
Treatment Ind  = Auto Trtmt, Tone/Ann 7
Serv/Equip Ind = POTS Bus/Res
Billing/Services DA Indicator:
   Third   = Allowed
   CC      = Allowed
   Spl BNS = Allowed
   Sent Pd = Allowed
```

Data error - default value not derived

The response indicates the TOPS switch detected a data error that is not in the range of defined protocol values. The default is not derived for the data error because the error occurred in a response indicator that is not required. An error message appears with a formatted list of received indicators and the values of the indicators. The system considers the indicator value as a data error. The value received appears. Additional ACG information also appears.

User action: Check for hardware or software problems on the OLNS LIDB.

A sample display appears in the following example:

MAP example of unsuccessful OLNSVER query (Response Error: Data Error in OLNS response - default not derived)

```
OLNSVER:
>SEND<cr>
Response Error – Data Error, out of range value detected
in OLNS response...
Billing/Services Indicator:
   Collect = Allowed
   Third   = Allowed
   Free TA = Allowed
   CC      = Allowed
   Free DA = Allowed
   Spl BNS = Allowed
   Sent Pd = Allowed
   DACC    = Allowed
   Spare   = Allowed
Treatment Ind  = Oper Trtmt, Cust Req
Serv/Equip Ind = POTS, Res, FR
Billing/Services DA Indicator:
   Third   = Allowed
   CC      = Allowed
   Spl BNS = Allowed
   Sent Pd = Allowed
InterLATA Carrier Ind:
   IC  = Indicated
   INC = Unknown, 5
InterLATA Carrier = 2085
Alpha String = Elderly
Disallowed Card Issuer Codes:
   123456, 789012, 345678, 901234, 567890
Foreign Lang = Greek
```

Data unavailable

The OLNS LIDB reported data not available in the return error message for the originating line number requested. An error message appears with a formatted list of default indicators and values derived from tables OLNSERR and OLNSDFLT. Additional ACG information also appears.

User action: Check for software problems or check that the OLNS LIDB contains the originating line number.

A sample display appears in the following example:

TOPS OLNS Interface (continued)

MAP example of unsuccessful OLNSVER query (Return error: Data Unavailable)

```
OLNSVER:
>SEND<cr>
Sending OLNS query...
Return Error – Data Unavailable...
Default values used from table OLNSDFLT index key: 45
Billing/Services Ind:
   Collect = Allowed
   Third   = Allowed
   CC      = Allowed
   Spl BNS = Allowed
   Sent Pd = Allowed
   DACC    = Not Allowed
Treatment Ind = Tone
Serv/Equip Ind = POTS Res–Flat Rate
Billing/Services DA Ind:
   Third   = Allowed
   CC      = Allowed
   Spl BNS = Allowed
   Sent Pd = Allowed
```

GTT failure

The system returns the query message before the OLNS LIDB received the message. Global title translation (GTT) failure causes this action. The GTT failure does not contain translation for an address of this problem and translation for the specified address. An error message appears with a formatted list of default indicators and values that tables OLNSERR and OLNSDFLT provide.

User action: Check CCS7 network datafill and connections.

A sample display appears in the following example:

MAP example of unsuccessful OLNSVER query (Return error: GTT Failure)

```
OLNSVER:
>SEND<cr>
Sending OLNS query...
Query Failure – GTT Failure
Default values used from table OLNSDFLT index key: 67
Billing/Services Ind:
   Collect = Allowed
   Third   = Allowed
   CC      = Allowed
   Spl BNS = Allowed
   Sent Pd = Allowed
   DACC    = Not Allowed
Treatment Ind = Tone
Serv/Equip Ind = POTS Res–Flat Rate
Billing/Services DA Ind:
   Third   = Allowed
   CC      = Allowed
   Spl BNS = Allowed
   Sent Pd = Allowed
```

Miscellaneous error

An error has occurred that the system cannot define. This condition is a severe error. An error can be an parameter length or part type that is not correct, or a parameter that is not known. An error message appears with a formatted list of default indicators and values that tables OLNSERR and OLNSDFLT provide.

User action: Check for hardware or software problems on the OLNS LIDB. Check CCS7 network datafill and connections.

A sample display appears in the following example:

TOPS OLNS Interface (continued)

MAP example of unsuccessful OLNSVER query (Response Error: Miscellaneous Error)

```
OLNSVER:
>SEND<cr>
Sending OLNS query...
Response Error – Miscellaneous Error
Default values used from table OLNSDFLT index key: 33
Billing/Services Ind:
   Collect = Allowed
   Third   = Allowed
   CC      = Allowed
   Spl BNS = Allowed
   Sent Pd = Allowed
   DACC    = Not Allowed
Treatment Ind = Tone
Serv/Equip Ind = POTS Res–Flat Rate
Billing/Services DA Ind:
   Third   = Allowed
   CC      = Allowed
   Spl BNS = Allowed
   Sent Pd = Allowed
```

Missing group

The OLNS LIDB reported "missing group" in the return error message for the originating line number requested. An error message appears with a formatted list of default indicators and values that tables OLNSERR and OLNSDFLT provide. Additional ACG information also appears.

User action: Check for hardware or software problems on the OLNS LIDB.

A sample display appears in the following example:

MAP example of unsuccessful OLNSVER query (Return error: Missing Group)

```
OLNSVER:
>SEND<cr>
Sending OLNS query...
Return Error – Missing Group
Default values used from table OLNSDFLT index key: 50
Billing/Services Ind:
   Collect = Allowed
   Third   = Allowed
   CC      = Allowed
   Spl BNS = Allowed
   Sent Pd = Allowed
   DACC    = Not Allowed
Treatment Ind = Tone
Serv/Equip Ind = POTS Res–Flat Rate
Billing/Services DA Ind:
   Third   = Allowed
   CC      = Allowed
   Spl BNS = Allowed
   Sent Pd = Allowed
```

Missing customer record

The OLNS LIDB reported "missing customer record" in the return error message for the originating line number requested. An error message appears with a formatted list of default indicators and values that tables OLNSERR and OLNSDFLT provide. Additional ACG information also appears.

User action: Check for hardware or software problems on the OLNS LIDB.

A sample display appears in the following example:

TOPS OLNS Interface (continued)

MAP example of unsuccessful OLNSVER query (Return error: Missing Customer Record)

```
OLNSVER:
>SEND<cr>
Sending OLNS query...
Return Error – Missing Customer Record
Default values used from table OLNSDFLT index key: 90
Billing/Services Ind:
   Collect = Allowed
   Third   = Allowed
   CC      = Allowed
   Spl BNS = Allowed
   Sent Pd = Allowed
   DACC    = Not Allowed
Treatment Ind = Tone
Serv/Equip Ind = POTS Res–Flat Rate
Billing/Services DA Ind:
   Third   = Allowed
   CC      = Allowed
   Spl BNS = Allowed
   Sent Pd = Allowed
```

Misroute

The OLNS LIDB reported "misroute" in the return error message for the originating line number requested. An error message appears with a formatted list of default indicators and values that tables OLNSERR and OLNSDFLT provide. Additional ACG information also appears.

User action: Check for hardware or software problems on the OLNS LIDB.

A sample display appears in the following example:

MAP example of unsuccessful OLNSVER query (Return error: Misroute)

```
OLNSVER:
>SEND<cr>
Sending OLNS query...
Return Error – Misroute
Default values used from table OLNSDFLT index key: 5
Billing/Services Ind:
   Collect = Allowed
   Third   = Allowed
   CC      = Allowed
   Spl BNS = Allowed
   Sent Pd = Allowed
   DACC    = Not Allowed
Treatment Ind = Tone
Serv/Equip Ind = POTS Res–Flat Rate
Billing/Services DA Ind:
   Third   = Allowed
   CC      = Allowed
   Spl BNS = Allowed
   Sent Pd = Allowed
```

Network problem

The system returned the query to the TOPS switch before the OLNS LIDB received the message. An error message appears with a formatted list of default indicators and values that tables OLNSERR and OLNSDFLT provide.

User action: Check CCS7 network datafill and connections.

A sample display appears in the following example:

TOPS OLNS Interface (continued)

MAP example of unsuccessful OLNSVER query (Query Failure: Network Problem)

```
OLNSVER:
>SEND<cr>
Sending OLNS query...
Query Failure –Network Problem
Default values used from table OLNSDFLT index key: 25
Billing/Services Ind:
   Collect = Allowed
   Third   = Allowed
   CC      = Allowed
   Spl BNS = Allowed
   Sent Pd = Allowed
   DACC    = Not Allowed
Treatment Ind = Tone
Serv/Equip Ind = POTS Res–Flat Rate
Billing/Services DA Ind:
   Third   = Allowed
   CC      = Allowed
   Spl BNS = Allowed
   Sent Pd = Allowed
```

Non-participating group

The OLNS LIDB returned non-participating group in the return error message for the originating line number requested. An error message appears with a formatted list of default indicators and values that tables OLNSERR and OLNSDFLT provide. Additional ACG information also appears.

User action: Check for hardware or software problems on the OLNS LIDB.

A sample display appears in the following example:

MAP example of unsuccessful OLNSVER query (Return error: Non-participating Group)

```
OLNSVER:
>SEND<cr>
Sending OLNS query...
Return Error – Non–participating Group
Default values used from table OLNSDFLT index key: 35
Billing/Services Ind:
   Collect = Allowed
   Third   = Allowed
   CC      = Allowed
   Spl BNS = Allowed
   Sent Pd = Allowed
   DACC    = Not Allowed
Treatment Ind = Tone
Serv/Equip Ind = POTS Res–Flat Rate
Billing/Services DA Ind:
   Third   = Allowed
   CC      = Allowed
   Spl BNS = Allowed
   Sent Pd = Allowed
```

Protocol problem

The OLNS LIDB returned a reject message. An error message appears with a formatted list of default indicators and values that tables OLNSERR and OLNSDFLT provide. Additional ACG information also appears.

User action: Check CCS7 network datafill and connections.

A sample display appears in the following example:

TOPS OLNS Interface (continued)

MAP example of unsuccessful OLNSVER query (Reject: Protocol Problem)

```
OLNSVER:
>SEND<cr>
Sending OLNS query...
Reject – Protocol Problem
Default values used from table OLNSDFLT index key: 77
Billing/Services Ind:
   Collect = Allowed
   Third   = Allowed
   CC      = Allowed
   Spl BNS = Allowed
   Sent Pd = Allowed
   DACC    = Not Allowed
Treatment Ind = Tone
Serv/Equip Ind = POTS Res–Flat Rate
Billing/Services DA Ind:
   Third   = Allowed
   CC      = Allowed
   Spl BNS = Allowed
   Sent Pd = Allowed
```

Screened data - partial response derived

The OLNS LIDB reported one of two conditions in a return error message. The OLNS LIDB reported screened data for the complete originating line number requested in the query message. The OLNS LIDB reported screened data in a minimum of one of the indicators in the response message.

> ***Note:*** Screened refers to the LIDB Data Screening Process. This process allows an LIDB data owner to specify data indicators that are not to be returned to specific query originators. If an indicator is specified to be screened to the query originator, the LIDB replaces the information in the indicator with zeros. Response messages can be completely screened which means all information in the indicators are marked as screened or an error code of screened is received. Response messages can be partially screened which means some, but not all, information in the indicators are marked as screened. Response messages can also be contain no screened information.

When the OLNS LIDB reports a minimum of one of the indicators as screened, tables OLNSERR and OLNSDFLT provide the default value. The value is for a required OLNS response indicator. A required OLNS response indicator can be the Billing Services Indicator, Treatment Indicator, Service/Equipment Indicator, or Billing/Services DA Indicator. If the value is not for a required OLNS response indicator, message Screened appears.

User action: There is no user action.

A sample display of a Screened value detected in the response message and a derived default value appears in the following example. The default value is for a required indicator:

MAP example of unsuccessful OLNSVER query (Return error: Screened Data - partial response derived)

```
OLNSVER:
>SEND<cr>
Sending OLNS query...
Response Error – Screened Data...
Default values used from table OLNSDFLT index key: 21
Billing/Services Ind:
   Collect = Allowed
   Third   = Not Allowed
   Free TA = Allowed
   CC      = Screened
             Default – Allowed
   Free DA = Allowed
   Spl BNS = Allowed
   Sent Pd = Allowed
   DACC    = Allowed for Local
Treatment Ind = Oper Trmt at Cust Req
Serv/Equip Ind = POTS Res–Flat Rate
InterLATA Carrier Ind:
   IC  = Indicated
   INC = Not Indicated
InterLATA Carrier = 5555
Alpha String = ELDERLY
Disallowed Card Issuer Codes:
   201220, 201221
Billing/Services DA Ind:
   Third   = Not Allowed
   CC      = Not Allowed
   Spl BNS = Allowed
   Sent Pd = Allowed
ILP CIC Ind = Indicated
ILP Carrier = 1234
```

Screened data - entire response derived

The OLNS LIDB reported screened data in a return error message for the originating line number requested in the query message. The OLNS LIDB can

TOPS OLNS Interface (continued)

report screened data in a minimum of one of the indicators returned in the response message.

User action: There is no user action required.

A sample of Screened Data returned in the return error message appears in the following example. This sample has all default values derived from tables OLNSERR and OLNSDFLT. The default values are for required indicators:

MAP example of unsuccessful OLNSVER query (Response Error: Screened Data - entire response derived)

```
OLNSVER:
>SEND<cr>
Sending OLNS query...
Return Error – Screened Data...
Default values used from table OLNSDFLT index key: 44
Billing/Services Ind:
   Collect = Allowed
   Third   = Allowed
   CC      = Allowed
   Spl BNS = Allowed
   Sent Pd = Allowed
   DACC    = Not Allowed
Treatment Ind = Tone
Serv/Equip Ind = POTS Res–Flat Rate
Billing/Services DA Ind:
   Third   = Allowed
   CC      = Allowed
   Spl BNS = Allowed
   Sent Pd = Allowed
```

Screened data - default not derived

The OLNS LIDB reported "screened data" in a return error message for the originating line number requested in the query message. The OLNS LIDB can report screened data in a minimum of one of the indicators returned in the response message.

User action: There is no user action required.

A Screened value detected in the response message and a default value that is not derived appears in the following example. The default value is for a non-required indicator:

TOPS OLNS Interface (continued)

MAP example of unsuccessful OLNSVER query (Response Error: Screened Data - default not derived)

```
OLNSVER:
>SEND<cr>
Sending OLNS query...
Response Error – Screened Data ...
Billing/Services Ind:
   Collect = Allowed
   Third   = Not Allowed
   Local   = Allowed
   CC      = Allowed
   Free DA = Allowed
   Spl BNS = Allowed
   Sent Pd = Allowed
   DACC    = Allowed for Local
Treatment Ind = Oper Trmt at Cust Req
Serv/Equip Ind = POTS Res–Flat Rate
InterLATA Carrier Ind:
   IC  = Screened
   INC = Not Indicated
Alpha String = ELDERLY
Disallowed Card Issuer Codes:
   201220, 201221
Billing/Services DA Ind:
   Third   = Not Allowed
   CC      = Not Allowed
   Spl BNS = Allowed
   Sent Pd = Allowed
ILP CIC Ind = Indicated
ILP Carrier = 1234
```

Timeout

The TOPS switch did not receive a response from the OLNS LIDB in the maximum time allowed. The TIMEOUT command determines the length of time the OLNSVER tool waits to time out. An error message appears with a formatted list of default indicators and values derived from tables OLNSERR and OLNSDFLT.

User action: There is no action required.

A sample display appears in the following example:

TOPS OLNS Interface (continued)

MAP example of unsuccessful OLNSVER query (Query Failure: Timeout)

```
OLNSVER:
>SEND<cr>
Sending OLNS query...
Query Failure – Timeout
Default values used from table OLNSDFLT index key: 67
Billing/Services Ind:
   Collect = Allowed
   Third   = Allowed
   CC      = Allowed
   Spl BNS = Allowed
   Sent Pd = Allowed
   DACC    = Not Allowed
Treatment Ind = Tone
Serv/Equip Ind = POTS Res–Flat Rate
Billing/Services DA Ind:
   Third   = Allowed
   CC      = Allowed
   Spl BNS = Allowed
   Sent Pd = Allowed
```

Unavailable network resource

The OLNS LIDB returned "unavailable network resource" in the return error message for the originating line number requested. An error message appears with a formatted list of default indicators and values that tables OLNSERR and OLNSDFLT provide. Additional ACG information appears.

User action: Check for hardware or software problems on the OLNS LIDB.

A sample display appears in the following example:

MAP example of unsuccessful OLNSVER query (Return error: Unavailable Network Resource)

```
OLNSVER:
>SEND<cr>
Sending OLNS query...
Return Error – Unavailable Network Resource
Default values used from table OLNSDFLT index key: 34
Billing/Services Ind:
   Collect = Allowed
   Third   = Allowed
   CC      = Allowed
   Spl BNS = Allowed
   Sent Pd = Allowed
   DACC    = Not Allowed
Treatment Ind = Tone
Serv/Equip Ind = POTS Res–Flat Rate
Billing/Services DA Ind:
   Third   = Allowed
   CC      = Allowed
   Spl BNS = Allowed
   Sent Pd = Allowed
```

Unexpected component sequence

The OLNS LIDB returned unexpected component sequence in the return error message for the originating line number requested. An error message appears with a formatted list of default indicators and values derived from tables OLNSERR and OLNSDFLT. Additional ACG information appears.

User action: Check for hardware or software problems on the OLNS LIDB.

A sample display appears in the following example:

TOPS OLNS Interface (continued)

MAP example of unsuccessful OLNSVER query (Return Error: Unexpected Component Sequence)

```
OLNSVER:
>SEND<cr>
Sending OLNS query...
Return Error – Unexpected Component Sequence
Default values used from table OLNSDFLT index key: 23
Billing/Services Ind:
   Collect = Allowed
   Third   = Allowed
   CC      = Allowed
   Spl BNS = Allowed
   Sent Pd = Allowed
   DACC    = Not Allowed
Treatment Ind = Tone
Serv/Equip Ind = POTS Res–Flat Rate
Billing/Services DA Ind:
   Third   = Allowed
   CC      = Allowed
   Spl BNS = Allowed
   Sent Pd = Allowed
```

Unequipped User

The query was returned to the TOPS switch before the OLNS LIDB recovered the query. A link problem causes this action. An error message appears to the user with a formatted list of default indicators and values derived from tables OLNSERR and OLNSDFLT.

User action: Check CCS7 network datafill and connections.

A sample display appears in the following example:

MAP example of unsuccessful OLNSVER query (Query Failure: Unequipped User)

```
OLNSVER:
>SEND<cr>
Sending OLNS query...
Query Failure – Unequipped User
Default values used from table OLNSDFLT index key: 82
Billing/Services Ind:
   Collect = Allowed
   Third   = Allowed
   CC      = Allowed
   Spl BNS = Allowed
   Sent Pd = Allowed
   DACC    = Not Allowed
Treatment Ind = Tone
Serv/Equip Ind = POTS Res–Flat Rate
Billing/Services DA Ind:
   Third   = Allowed
   CC      = Allowed
   Spl BNS = Allowed
   Sent Pd = Allowed
```

Unexpected data value

The OLNS LIDB returned "unexpected data value" in the return error message for the originating line number requested. An error message appears with a formatted list of default indicators and values derived from tables OLNSERR and OLNSDFLT. Additional ACG information appears.

User action: Check for hardware or software problems on the OLNS LIDB. Check OLNSVER parameters.

A sample display appears in the following example:

TOPS OLNS Interface (continued)

MAP example of unsuccessful OLNSVER query (Return error with problem data: Unexpected Data Value)

```
OLNSVER:
>SEND<cr>
Sending OLNS query...
Return Error with Problem Data – Unexpected Data Value
Default values used from table OLNSDFLT index key: 41
Billing/Services Ind:
   Collect = Allowed
   Third   = Allowed
   CC      = Allowed
   Spl BNS = Allowed
   Sent Pd = Allowed
   DACC    = Not Allowed
Treatment Ind = Tone
Serv/Equip Ind = POTS Res–Flat Rate
Billing/Services DA Ind:
   Third   = Allowed
   CC      = Allowed
   Spl BNS = Allowed
   Sent Pd = Allowed
```

Vacant group

The OLNS LIDB returned "vacant group" in the return error message for the originating line number requested. An error message appears with a formatted list of default indicators and values derived from tables OLNSERR and OLNSDFLT. Additional ACG information appears.

User action: There is no user action required.

A sample display appears in the following example:

MAP example of unsuccessful OLNSVER query (Return error: Vacant Group)

```
OLNSVER:
>SEND<cr>
Sending OLNS query...
Return Error – Vacant Group
Default values used from table OLNSDFLT index key: 49
Billing/Services Ind:
   Collect = Allowed
   Third   = Allowed
   CC      = Allowed
   Spl BNS = Allowed
   Sent Pd = Allowed
   DACC    = Not Allowed
Treatment Ind = Tone
Serv/Equip Ind = POTS Res–Flat Rate
Billing/Services DA Ind:
   Third   = Allowed
   CC      = Allowed
   Spl BNS = Allowed
   Sent Pd = Allowed
```

Check response message received from OLNS LIDB

Enter command TRACE DISPLAY to check the response message received from the OLNS LIDB. A trace buffer stores the message. When the messages appear, the first or oldest message in the buffer appears first. The last or newest message in the buffer appears last. The buffer can store and display a maximum of 10 messages.

Possible responses are as follows:

Displaying the TRACE buffer - successful response without ACG information

For a complete response without ACG information, the display is a raw hexadecimal dump of the query message. The dump is sent to the OLNS LIDB with the same message in a formatted form. A sample display appears in the following example:

TOPS OLNS Interface (continued)

MAP example of displaying the TRACE buffer - successful response message without ACG information

```
OLNSVER:
>TRACE DISPLAY<cr>
Query Msg = E2 2B C7 04 00 00 10 2E E4 23 E9 21 CF 01 01 D0 02 81 01 F2
18 DF 6F 00 AA 0B 84 09 01 00 11 0A 16 39 22 21 43 BF 48 01 01 BF 7B 01
01
Pkg Type ID= Query   TCAP Msg Len= 2B   ID= Trans ID   Trans ID Len= 04
Trans ID= 0000102   ID= Comp Seq   Comp Seq Len= 23   ID= Comp Type
Comp Type Len= 21   ID= Comp ID   Comp ID Len= 01   Comp ID= Invoke
ID= Op Code   Op Code Len= 02   Family Name= Rsp Req   Spec= Provide Val
ID= Parm Set   Parm Set Len= 18   ID= OLNS Info   OLNS Info Len= 00
ID= Svc Key   Svc Key Len= 0B   ID= Digits   Digits Len= 09   Type= Clg
Nat Num= Nat, No Rst   Enc/Num Plan= BCD, ISDN   Num Dig= 0A
Digits= 6193221234   ID= CIC Exp   CIC Exp Len= 01   CIC Exp= Yes
ID= ILP Req   ILP Req Len= 01   ILP Req= Yes
```

Displaying the TRACE buffer - complete response with ACG information

For a complete response with ACG information, the display is a raw hexadecimal dump of the response message. The dump is from the OLNS LIDB with the same message in a formatted form. A sample display appears in the following example:

MAP example of displaying the TRACE buffer - complete response message with ACG information

```
OLNSVER:
>TRACE DISPLAY<cr>
Response Msg=  E8 54 EA 39 CF 01 01 F2 34 DF 48 08 41 42 43 44 45 46 47
48 DF
5E 03 62 54 5B DF 79 02 5B 01 DF 4B 02 02 03 DF 68 01 12 DF 6C 01 0E DF
74 01
15 DF 78 01 02 DF 49 06 1B 00 01 04 21 43 E9 17 CF 00 D0 02 07 01 F2 0F
DF 47
03 03 05 08 84 07 02 00 01 06 19 79 19
Pkg Type= Response    Trans ID= #00000000   ID= Comp Seq    Len= 84
ID= Ret Res Last    Len= 57   ID= Comp ID   Len= 1   Corr ID= 1
ID= Parm Set   Len= 52
ID= Alpha Str   Len= 8   Str= ABCDEFGH
ID= Bill/Svc TA   Len= 3   Coll= Allow Dom    Third= Allow w/Opr Vfy
    Free TA= Allow    CC= Card Rstr Lcl
    Free DA= Allow    BNS= Allow    Sent Pd= Intra Due To Non–Pay
    DACC= Allow w/Bill Rstr    Spare= Allow
ID= Bill/Svc DA   Len= 2   Third= Allow w/Opr Vfy
    CC= Card Rstr    BNS= Allow    SentPd= Allow
ID= IC Ind   Len= 2   IC= Indic    INC= Denied
ID= Serv/Eqp   Len= 1   Serv/Eqp= Voice Quote w/Tax
ID= Trtmt   Len= 1   Trtmt= Auto Trtmt, Tone/Ann 7
ID= For Lang   Len= 1   Lang= Navaho
ID= ILP Ind   Len= 1   ILP= Indic
ID= Digits   Len= 6   Type= Orig ILP   Nature= No Pres Rst, Ntl
    Plan/Enc= Not Appl, BCD    Count= 4   Digits= 1234
ID= Inv Last    Len= 23   ID= Comp ID   Len= 0
ID= Op Code   Len= 2   Fam= Netwk Mgmt    Spec= Auto Code Gap
ID= Parm Set   Len= 15
ID= ACG  Len= 3   Cntrl= DB Ovrld    Dur= 16 secs    Gap= 30 secs
ID= Digits   Len= 7   Type= Clg   Nature= No Pres Rst, Ntl
    Plan/Enc= Not Appl, BCD    Count= 6   Digits= 919791
```

Displaying the TRACE buffer - return error message

For a response with a "return error" message, the display is a raw hexadecimal dump of the return error message. The dump is sent to the OLNS LIDB with the same message in a formatted form.

User action: Refer to the Error Code field for more information on the Return Error.

A sample display appears in the following example:

TOPS OLNS Interface (continued)

MAP example of displaying the TRACE buffer - Return Error message

```
OLNSVER:
>TRACE DISPLAY<cr>
Response Msg=  E8 0A EB 08 CF 01 01 D3 01 04 F2 00
Pkg Type= Response    Trans ID= #00000055   ID= Comp Seq    Len= 10
ID= Ret Err    Len= 8   ID= Comp ID   Len= 1   Corr ID= 1
ID= Err Code   Len= 1   Err Code= Miss Cust Rec    ID= Parm Set   Len= 0
```

Displaying the TRACE buffer - return error message with problem data

For a response with a "return error" message with problem data, a raw hexadecimal dump of the return error message appears. The dump is sent to the OLNS LIDB with the same message in a formatted form.

User action: Refer to the Error Code field for more information on the Return Error.

A sample display appears in the following example:

MAP example of displaying the TRACE buffer - Return Error message with problem data

```
OLNSVER:
>TRACE DISPLAY<cr>
Response Msg=  E8 10 EB 0E CF 01 00 D3 01 02 F2 06 86 04 DF 46 01 00
Pkg Type= Response    Trans ID= #00000000   ID= Comp Seq    Len= 16
ID= Ret Err    Len= 14   ID= Comp ID   Len= 1   Corr ID= 0
ID= Err Code   Len= 1   Err Code= Unexp Data Val  ID= Parm Set   Len= 6
ID= Prob Data  Len= 4   Prob Data= #DF460100
```

Displaying the TRACE buffer - reject message

For a response with a "reject" message, the display is a raw hexadecimal dump of the reject message. The dump is sent to the OLNS LIDB with the same message in a formatted form.

User action: Refer to the Type and Specifier fields for more information on the Reject.

A sample display appears in the following example:

MAP example of displaying the TRACE buffer - Reject message

```
OLNSVER:
>TRACE DISPLAY<cr>
Response Msg=  E8 0B EC 09 CF 01 00 D5 02 02 03 F2 00
Pkg Type= Response    Trans ID= #00000000   ID= Comp Seq    Len= 11
ID= Reject    Len= 9   ID= Comp ID   Len= 1   Corr ID= 0
ID= Prob Code   Len= 2   Type= Inv Prob    Spec= Incorr Parm
ID= Parm Set    Len= 0
```

Displaying the TRACE buffer - UDTS message

For a response with a UDTS message, the display contains the diagnostic values received in the UDTS message. The display indicates why the system returned the query message before the OLNS LIDB received the message.

User action: Refer to the Diagnostic Value for more information.

A sample display appears in the following example:

MAP example of displaying the TRACE buffer - UDTS message

```
OLNSVER:
>TRACE DISPLAY<cr>
TCAP Event= UDTS   Diag= 5, Network Problems
```

Displaying the TRACE buffer - Cannot format message

If the OLNSVER tool cannot format the message, the hexadecimal version of the response message appears with an error message. The message states that OLNSVER cannot format the message. The OLNSVER cannot format the message for the following conditions:

- parameter length that is not correct - The digits parameters do not affect the OLNSVER procedure to format the message. For the digits parameters, the trace command can display the maximum length of the parameter. The digit parameters are Calling Number, Disallowed Card Issuer Codes, IC Carrier, INC Carrier and ILP Carrier .
- not correct/not known package type, part type or parameter received
- a mismatch in the digits parameters (listed above) between the Number of Digits field and the actual digits received
- more than the maximum allowed parts or parameters received

TOPS OLNS Interface (continued)

User action: Refer to the hexadecimal message for more information.

A sample display appears in the following example:

MAP example of displaying the TRACE buffer - Cannot format message

```
OLNSVER:
>TRACE DISPLAY<cr>
Response Msg=  E8 10 EA 0E CF 01 01 F2 09 DF 43 06 02 03 00 00 00 32
Pkg Type= Conv w/Perm    Trans ID= #00000000   ID= Comp Seq    Len= 16
Unable to format rest of message.
```

Quit OLNSVER

Enter command QUIT to leave OLNSVER.

Commands

The commands are as follows:

OLNSVER commands

Command	Description
CICEXP <Y or N>	Carrier Identification Code Expansion Indicator. This command specifies if the CIC Expansion Indicator must be sent in the query message. This command specifies if the system must return a 3 or 4 digit CIC in the OLNS response message. The argument is Y or N. The default is Y. If the argument is Y, the CIC Expansion Indicator is sent in the OLNSVER query message. The system can return a 4 digit CIC in the response message. The 4 digit CICs are IntraLATA, InterLATA, International or any group of the previous. If the CICEXP argument is N, the system does not send CIC Expansion Indicator in the OLNSVER query message. The system can return a 3 digit CIC in the response message.

TOPS OLNS Interface (continued)

OLNSVER commands

Command	Description

	Note: The IntraLATA Carrier Number Indicator, InterLATA Carrier Number Indicator and International Carrier Number Indicator are optional OLNS parameters. The OLNS LIDB can return these parameters.
	
	Examples are as follows:
	
	`> CICEXP <cr>  (request current value)`
	
	`CIC Expansion: Y`
	
	`> CICEXP N<cr>  (set value)`
	
	`CIC Expansion: N`

CLGNO <10 digits>	Calling number. This command specifies the 10 digit calling party number. The default is 0000000000. If the first 6 or more digits are zeros, enclose the number in single quotation marks.
	
	Following are examples:
	
	`> CLGNO <cr>  (request current value)`
	
	`Calling Number: 2012201234`
	
	`> CLGNO 2012204567<cr>  (set value)`
	
	`Calling Number: 2012204567`
	
	`> CLGNO '000000567'<cr>  (set value)`
	
	`Calling Number: 000000567`

CLGSERV <clg service>	Calling service. This command specifies the calling party service. Values for the argument are STATION, SPECIAL, HOTEL, COIN, MOBILE, and OTHER. The default is STATION.

TOPS OLNS Interface (continued)

OLNSVER commands

Command	Description

	This command indexes tables OLNSERR and OLNSDFLT when the system detects an error.
	
	Examples are as follows:
	
	`> CLGSERV <cr>  (request current value)`
	
	`Calling Service: STATION`
	
	`> CLGSERV HOTEL<cr>  (set value)`
	
	`Calling Service: HOTEL`

COMMANDS	Commands. This command provides a list of commands available in the OLNSVER tool.

OLNSVER commands

Command	Description
	Examples are as follows: OLNSVER: >COMMANDS<cr> CICEXP - Specify if CIC expansion Ind. is sent in query msg. CLGNO - Specify digits of calling party number. CLGSERV - Specify calling party service. COMMANDS - Display list of commands. ILPREQ - Specify if ILP Required Ind. is sent in query msg. QACG - Query the ACG controls for a given NPA-NXX. QUIT - Quit the OLNSVER tool. RESET - Reset the OLNSVER tool parameters. SEND - Send an OLNSVER query to a LIDB. SHOW - Display the OLNSVER tool parameters. TIMEOUT - Specify how long to wait for a query response. TRACE - Specify the OLNSVER trace functionality. For more information type: Q <command name>.

TOPS OLNS Interface (continued)

OLNSVER commands

Command	Description

HELP<command>	Help. This command provides a description of a command.
	An example is as follows:
	`> HELP CLGNO<cr>`
	`Display or update the calling number`
	`Calling number must be 10 decimal digits`
	`Parms: [<Calling Number> STRING]`

HELP OLNSVER	Help OLNSVER. This command describes OLNSVER and a list of available commands.
	An example is as follows:
	`>HELP OLNSVER<cr>`
	`TOPS OLNSVER (OLNS Verification) test tool.`
	`The OLNSVER tool allows the user to create OLNS queries and send them to an OLNS LIDB, and view the query responses.`
	`The following are a list of OLNSVER parameter commands which both display and update the OLNSVER parameter values: CLGNO CICEXP CLGSERV TIMEOUT TRACE`
	`To display, enter the command with out any arguments.i.e. CLGSERV`
	`To update, enter the new value as an argument.i.e. CLGSERV MOBILE`
	`Other OLNSVER commands are:COMMANDS QACG QUIT RESET SEND SHOW`

OLNSVER commands

Command	Description
ILPREQ <Y or N>	IntraLATA presubscription. This command refers to functionality OLNS IntraLATA Presubscription (ILP), OSEA00006. This command specifies if the system sent the ILP Required Indicator the query message. The argument is Y or N. The default is Y if the ILP_SOC option (OSEA0006) is ON. If the ILP_SOC option is not ON, this parameter is not available. If the OLNS ILP SOC option is not ON when the user enters the OLNSVER tool and the SOC option changes, the user must exit OLNSVER. The user must enter OLNSVER again for the system to accept the change of SOC state. The ILP indicator determines if a subscriber selected a preferred carrier for intraLATA calls that can differ from the preferred interLATA carrier. If the ILPREQ parameter is Y, the system sends the ILP Required Indicator in the OLNSVER query message. The system returns the ILP CIC Indicator and Number in the response message. If the ILPREQ parameter is N, the system does not send the ILP Required Indicator in the OLNSVER query message. The system does not return the ILP CIC Indicator and Number in the response message. The system can return a 4 digit ILP CIC in the IntraLATA Carrier Number if ILPREQ is Y and CICEXP is Y. The system can return a 3 digit ILP CIC in the IntraLATA Carrier Number Indicator if ILPREQ is Y and CICEXP is N. The relationship between CICEXP and ILPREQ is as follows: CICEXP ILPREQ Query message Response message (optionally sent) --- Y Y ILP Required Ind sent, CIC Expansion Ind sent — 4 digit ILP CIC N Y ILP Required Ind sent, CIC Exp Ind not sent — 3 digit ILP CIC Y N ILP Req Ind not sent, CIC Expansion Ind sent — ILP CIC should not be returned N N ILP Req Ind not sent, CIC Exp Ind not sent — ILP CIC should not be returned ***Note:*** The IntraLATA Carrier Number Indicator is an optional OLNS parameter that the OLNS LIDB can return.

TOPS OLNS Interface (continued)

OLNSVER commands

Command	Description

	Examples are as follows:
	
	`> ILPREQ <cr>  (request current value)`
	
	`ILP Required: N`
	
	`> ILPREQ Y<cr>  (set value)`
	
	`ILP Required: Y`

QACG <6 digits>	Query Automatic Code Gapping. This command queries the Automatic Code Gapping (ACG) status according to the first 6 digits of the calling party directory number. If ACG is active, the duration of ACG, the gap period and the amount of time until the ACG duration controls expire appear. If ACG is not active according to the 6 digits entered, a message appears. The message states that ACG is not active.
	
	Examples are as follows:
	
	`>QACG 619322<cr>`
	
	`Automatic Code Gapping is active for 619322.`
	
	`Duration: 128 secs  Gap: 4 secs`
	
	`ACG controls expire in 3 seconds`
	
	`>QACG 619321<cr>`
	
	`Automatic Code Gapping is not active for 619321.`

Q OLNSVER	Query OLNSVER. This command is the same command as HELP OLNSVER. Refer to the HELP OLNSVER command.

QUIT	Quit. This command exits the OLNSVER CI increment.
	
	An example is as follows:
	
	`OLNSVER:`
	
	`> QUIT<cr>`
	
	`CI:`

TOPS OLNS Interface (continued)

OLNSVER commands

Command	Description
RESET <Y or N>	Reset. This command resets the OLNSVER parameters to the default values. These parameters and the default values are as follows: Parameter Default --- CLGNO 0000000000 CICEXP Y ILPREQ Y (Only if the ILP_SOC option is ON. If not ON, this parameter is not available) CLGSERV STATION TIMEOUT 2 (secs) TRACE OFF

TOPS OLNS Interface (continued)

OLNSVER commands

Command	Description
	Examples are as follows: >RESET<cr> This will reset all parameters to default values. Are you sure you want to do this? Please confirm (“YES", “Y", “NO",or “N"): >Y<cr> The parameters have been reset to default values. >RESET<cr> This will reset all parameters to default values. Are you sure you want to do this? Please confirm (“YES", “Y", “NO",or “N"): >N<cr> The parameters have NOT been reset to default values.
SEND	Send. This command sends an OLNS query to the OLNS LIDB. The OLNS LIDB interprets and displays the response received. If the query is not complete or the system detects an error in the response message, an error message appears. An error message appears with a formatted response message that contains default information from tables OLNSERR and OLNSDFLT. An example is as follows: >SEND<cr> Sending OLNS query... (Refer to section “Query responses" for responses)

TOPS OLNS Interface (continued)

OLNSVER commands

Command	Description

SHOW	Show. This command displays the value of the OLNSVER parameters.
	
	Note: This command does not allow the response message to appear again. The SEND command or the TRACEing utility must send the query message again to view the response message again.
	
	An example is as follows:
	
	`>SHOW<cr>`
	
	`Calling Number: 2012201234`
	
	`CIC Expansion: YES`
	
	`ILP Required: YES`
	
	`Calling Service: STATION`
	
	`Timeout: 5 secs`
	
	`Tracing: ON`

TOPS OLNS Interface (continued)

OLNSVER commands

Command	Description

TIMEOUT <1 to 15>	Time out. This command determines the maximum waiting period in seconds for receive a reply from an OLNS query. The range is 1 s to 15 s and the default is 2 s.
	Examples are as follows:
	`>TIMEOUT<cr>  (request current value)`
	`Timeout: 5 secs`
	`>TIMEOUT 10<cr>  (set value)`
	`Timeout: 10 secs`

OLNSVER commands

Command	Description

TRACE<ON , OFF, CLEAR, or DISPLAY>	Trace. This command turns tracing on/off. This command displays a maximum of 10 messages in the tracing buffer. This command also clears messages in the tracing buffer.
	
	The arguments are as follows:
	
	• ON - enables the system to save the complete query and response messages in the tracing buffer with the DISPLAY argument
	
	• OFF - does not allow the system to save messages to the tracing buffer
	
	• CLEAR - clears messages in the tracing buffer
	
	• DISPLAY - display messages in the tracing buffer
	
	The default is OFF.
	
	The trace buffer can hold a maximum of 10 response messages. The 11th (newest) message overwrites the 1st message (oldest) in the buffer. This action stops when the message buffer is CLEARed, turned OFF, or OLNSVER is exited. Timeouts and ACG blocking do not have any associated response messages. The trace buffer does not store timeouts or ACG blocking.
	
	Turning tracing ON or OFF does not clear the trace buffer. When the system exits the OLNSVER tool or issues the TRACE CLEAR command, the system clears all messages in the trace buffer.
	
	Examples are as follows:
	
	`>TRACE ON<cr>`
	
	`Tracing: ON`
	
	`>TRACE CLEAR<cr>`
	
	`The trace buffer has been cleared.`
	
	`>TRACE DISPLAY<cr>`
	
	`The trace buffer has been cleared.`
	
	`(Refer to section “Trace responses" for responses)`

SERVORD

The TOPS OLNS Interface does not use SERVORD.

2 Datafilling Enhanced Services

This chapter contains the enhanced services functionalities.

Automatic Coin Toll Service

Ordering codes

Functional group ordering code: ENSV0101

Functionality ordering code: ENSV0102

Release applicability

TOPS11 and up

BCS36 introduced Automatic Coin Toll Service.

Requirements

To operate, Automatic Coin Toll Service (ACTS) has the following requirements:

- BAS Generic, BAS00003
- Operator Services Basic, OSB00101, and table TOPSFTR parameter TOPS_ON_OFF_SWITCH = Y

Description

The following features provide this functionality:

Feature number	Feature name
BC1377	Automatic Coin Toll Service Phase I
BR0489	Automatic Coin Toll Service (ACTS)
BF0692	ACTS Standard PROM Announcements
UQ900085	Time and Charge Conflict with Collect Calls
AL0011	ACTS Coin Tone Generation Test
BK04339	Tenths of seconds timer for rated calls (BCS36)
59006873	Seconds-Based Announcements for External Real-Time Rated Calls (TOPS11)
59006865	EOL Notification & EOL of TOPS ACD (TOPS12)

The ACTS allows the caller to dial 1+ coin calls from a prepay coin station without operator interruption. The Digital Recorded Announcement Machine (DRAM) provides the announcements for coin deposit requests. The Coin Detection Circuit (CDC) provides the coin counting function.

The primary use of ACTS is to reduce operator involvement when station paid coin calls are handled. The ACTS offers the following abilities:

- initial contact and charge due contacts on most coin paid and person paid calls
- notification on coin calls and notification for non-coin calls
- quotation on most time and charges for non-coin calls

After the first contact with the operator, 1+ coin calls from a post-pay station recall to ACTS for overtime coin collection.

For 1+ 7-digit and 1+ 10-digit coin calls, the DMS uses the called and calling numbers for rating purposes. When the DMS rates a call, a DRAM provides the appropriate announcement that the rating for the call indicates. For example, “Please deposit one dollar and forty cents for the first three minutes."

Operation

The ACTS uses the DRAM and a CDC to automate the handling of toll calls from a coin station. On coin calls, the DRAM plays announcements to the subscriber. The DRAM prompts the subscriber to enter a specified amount. The CDC connects to the calling station. The CDC analyzes the dual frequency coin deposit tones the coin phone generates to count the coins deposited. When the caller deposits enough coins, the system plays a “Thank you" announcement. The system outpulses the called number.

If a call must queue for an operator, the CDC remains attached and continues to count coins. If the caller deposits enough coins when in queue, the call arrives at a TOPS position.

The ACTS can automate 1+ prepaid station coin calls if the following conditions are present:

- The ACTS compatible coin phone—The caller must make calls that receive ACTS from ACTS-compatible coin phones. The calls must generate dual frequency coin deposit tones that the CDC can recognize. To determine the ACTS compatibility of a coin phone, Table TOPSACTS exists and Table SPLDNID changes.
- Successful Automatic Number Identification (ANI)—ANI success is required for rating. The ACTS requires ANI success to process calls. If ANI failure occurs on a coin call, the operator handles the initial failure. The ACT can handle failures on additional contacts.
- Machine ratability—Machine ratability is a requirement for automatic processing. If a rate step is not available for a coin call, the following action occurs. The system presents the call to a Traffic Operator Position

Automatic Coin Toll Service (continued)

System (TOPS) operator for the initial contact. As with ANI failure, ACTS can handle the call on additional contacts.

- Call cannot involve large charges—Prepay coin station hoppers handle a limited number of coins. If the cost of a coin call exceeds this amount, the system routes the call to an operator. This operator can collect the coins after the caller reaches the called station. A trunk group in Table TOPSACTS has this large charge amount specified. The caller can make the call from an ACTS compatible coin phone. When this type of call occurs, the system brings the caller to an operator position. The ACTS connects the CDC when the operator identifies the paid charge class and the charges appear. If the large charges appear for the initial period of the call, the operator must verify that the called party answers the call. The operator must perform this action because the system cannot return coins after the system collects the coins. Ringing and talking masks the coin signals to the CDC. The caller must not deposit coins until the called party answers.
- Time and charge conflict with collect call—Add office parameter TOPS_CLD_TIME_AND_CHG_NO_ACTS to provide the operating company the option to route the called party to an operator for time and charges.

Note 1: If a caller owes money after the caller goes on-hook, the ACTS automatically generates a re-ring signal. The system performs this action to establish communication again with the calling party. End Offices (EOs) with ACTS phones must provide ringback.

Note 2: The charges for the call appear in the operator display AMT DUE. The normal operator practice is to collect coins after a specified amount. When the system collects coins, the system updates AMT DUE field. When the caller deposits the correct coins, the system sets the field AMT DUE to zero. Overpayment appears in the overcollect field. Any additional coins deposited cause the screen to update and the overcollect field to increase.

Note 3: The system uses the same method that appears in Note 2 to process overtime seizures with large charges.

The call flow steps of ACTS are as follows:

- first contact of a coin call
- coin notification
- charge due contacts

Automatic Coin Toll Service (continued)

- time and charge (T&C) quotations
- non-coin notification.

These steps appear in the following three figures. The sections that follow the figures explain these steps.

ACTS Flow Diagram - Initial Contact and Charges Due

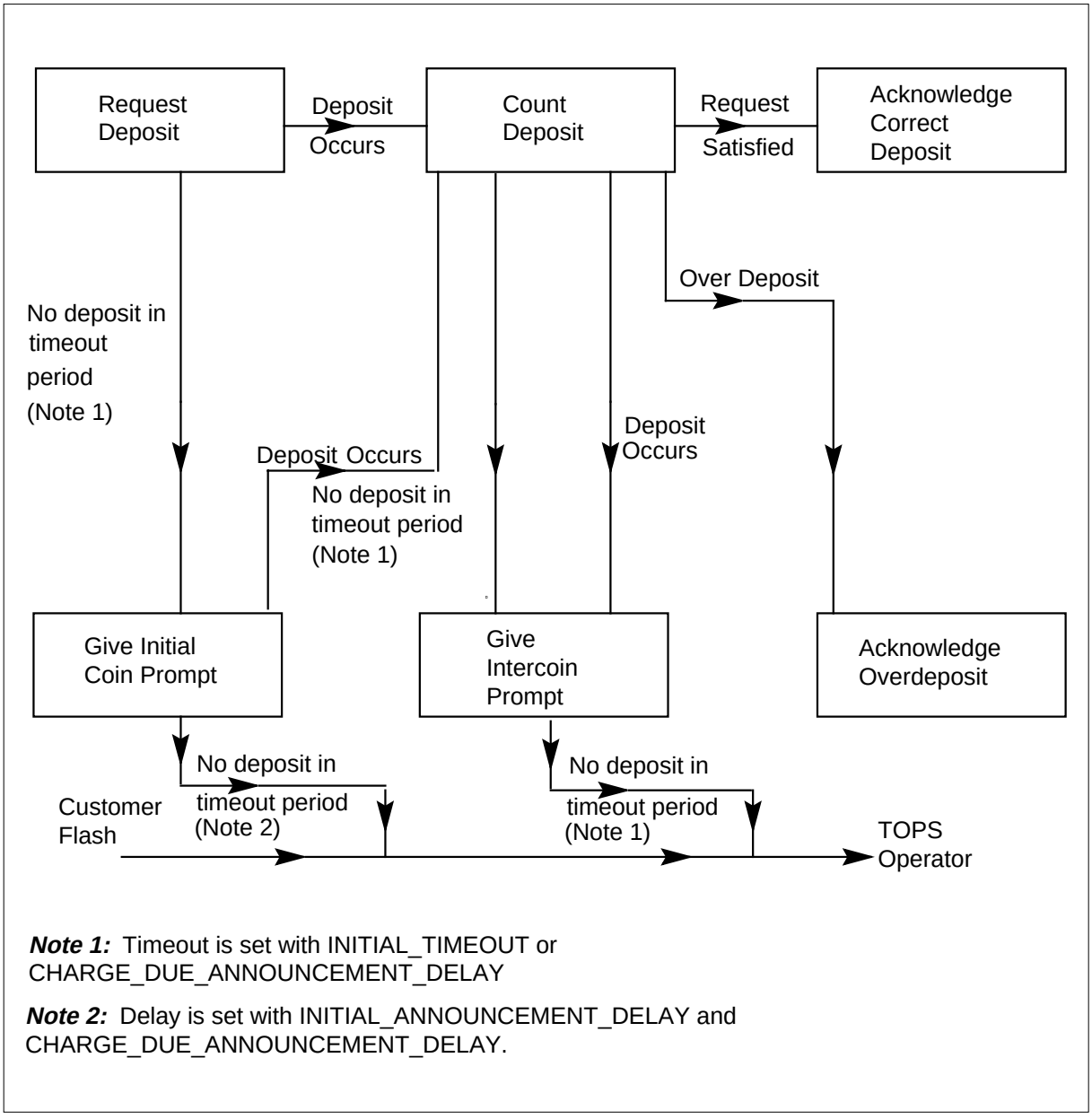

Note 1: Timeout is set with INITIAL_TIMEOUT or CHARGE_DUE_ANNOUNCEMENT_DELAY

Note 2: Delay is set with INITIAL_ANNOUNCEMENT_DELAY and CHARGE_DUE_ANNOUNCEMENT_DELAY.

Automatic Coin Toll Service (continued)

ACTS Call at Operator

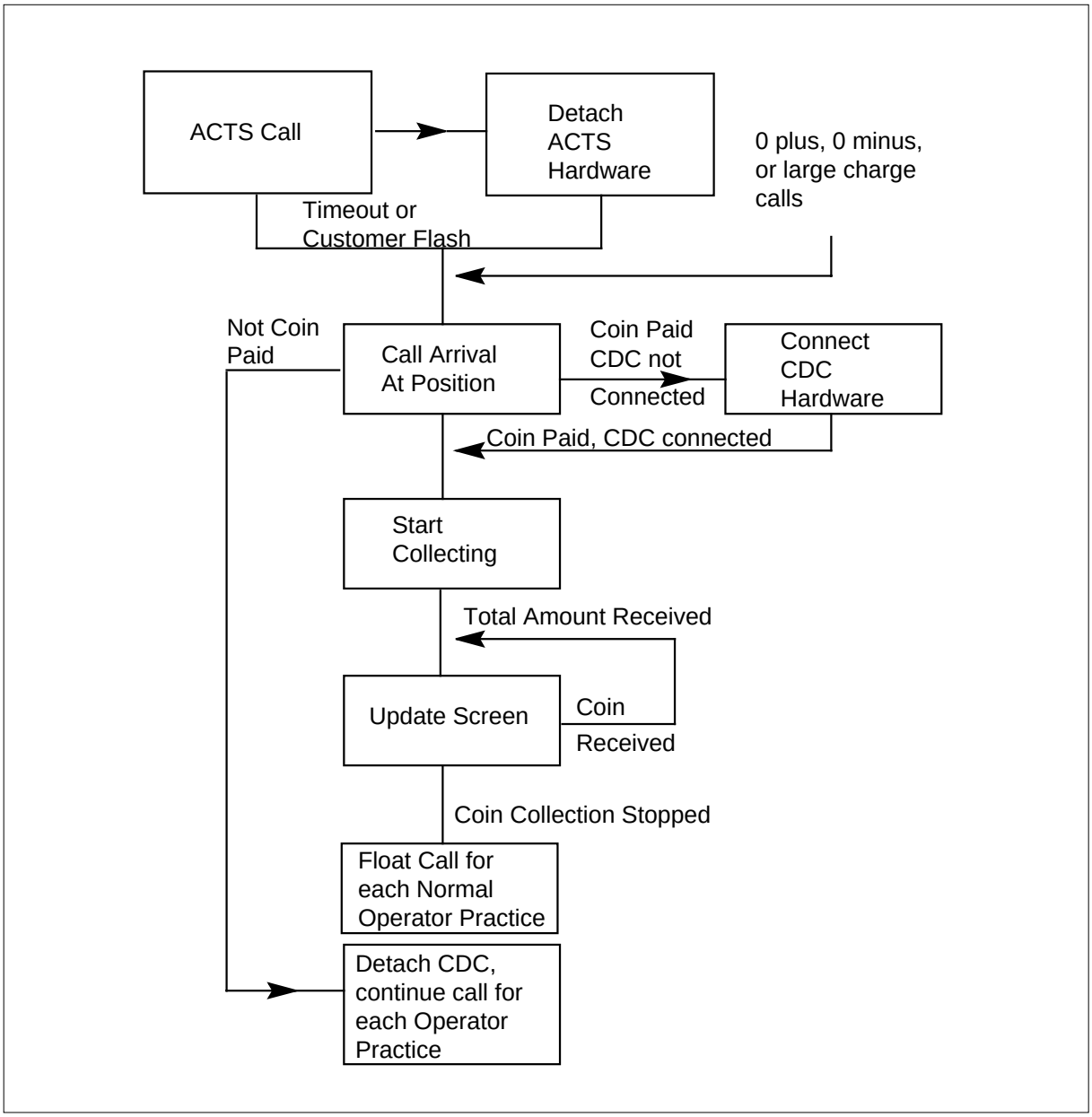

Automatic Coin Toll Service (continued)

ACTS Network Configurations -- Initial Contact

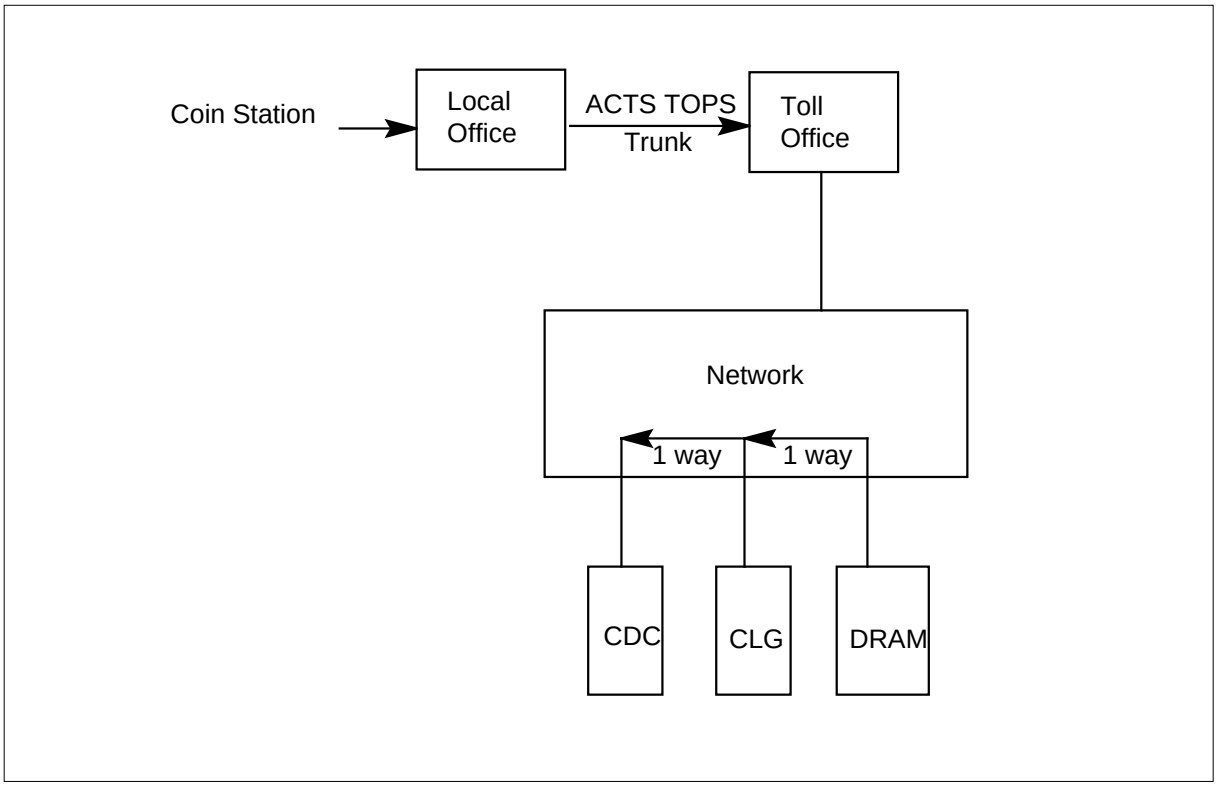

Automatic Coin Toll Service (continued)

ACTS Network Configurations -- Recalls

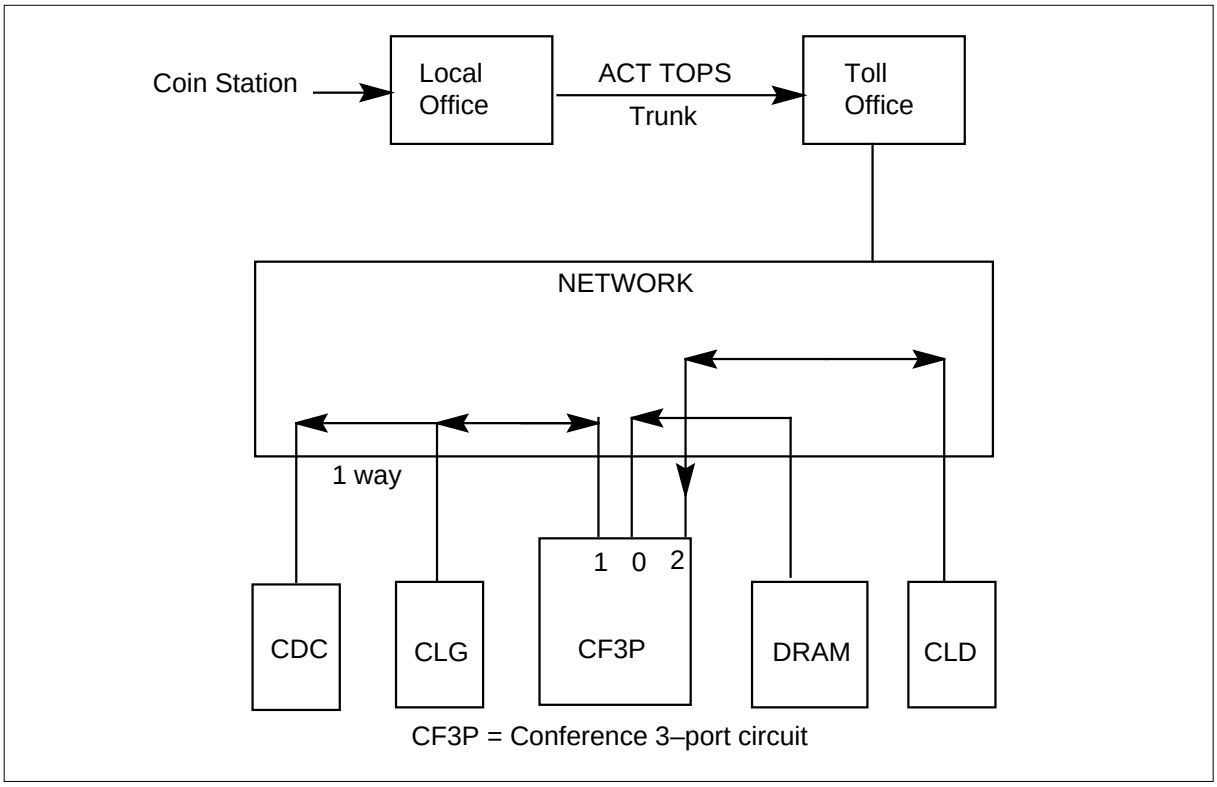

Initial contact

If a call at the Operator Position is COIN PAID, the ACTS attaches the CDC. A display of ACTS on the Operator Position indicates this action. If the word ACTS flashes, the CDC is not available or a CDC error is present. If the call is COIN PAID and the display ACTS is not present, the coin telephone is not ACTS compatible.

Enter the appropriate data in Table TOPSACTS to indicate the ACTS compatibility of a coin telephone.

1+ coin calls

If a timeout or a subscriber flash occurs, the system sends the call to the operator. The ACTS already contains the CDC. When the call arrives at the position, the operator can help the subscriber deposit the additional coins. The CDC counts the coins.

The AMT DUE field on the operator position CRT indicates the amount that the caller owes.

0+ calls

The caller often bills 0+ calls to a credit card, a third number, or the call is a collect call. If the call is coin sent paid, the ACTS connects the CDC to help the operator count the coin deposits. When a 0+ call arrives at the position, the operator determines how the caller wants to bill the call. If the call is not coin paid, the call must be handled according to current operator practice. If the call is coin paid, the ACTS connects the CDC when the operator presses the STA PD or PER PD key. The rates for the call appear and the system updates ACTS fields. The operator informs the caller of the amount the user must deposit. The CDC counts the coins as the caller deposits the coins. When the caller deposits the required amount, the call can be floated. The ACTS handles any additional contacts.

0- calls

After the caller enters the called number, the call proceeds like a 0+ call proceeds.

Post-pay coin calls

An operator must be attached to verify called answer because post-pay coin phones cannot return coins. If the coin phone is ACTS compatible, the operator can attach a CDC to assist in the coin count. The operator must verify called answer before the operator requests the deposit.

If the called party answered, the ACTS handles coin recalls from post-pay stations.

Initial deposit request

To reach ACTS, a caller dials a 1+ 7-digit or 1+ 10-digit call from a coin telephone. The local office routes the call to the DMS TOPS on a trunk that can handle ACTS traffic. The DMS receives the called number and identifies the calling number. The DMS performs coin rating and computes the station rate initial period charges. The system sends the call to a CDC. The DRAM receives the initial period and charge information. When the automation conditions are met and the amount owed for the first period is calculated, the DRAM plays the following announcement:

```
{X dollar(s)}           {X dollar(s)and Y cents} please  {Y cents}
(2–s pause)               {X dollar(s)}  Please deposit {X dollar(s) and
Y cents}      {Y cents}  for the first Z minutes.
```

Initial coin prompt

The caller does not always begin to deposit coins in the timeout interval in Table ACTSOPTS, TOPS Customer Data Design after the end of the first

Automatic Coin Toll Service (continued)

announcement. When this action occurs, the DRAM plays the following prompt:

```
              {X dollar(s)}
Please deposit {X dollar(s) and Y cents}
               {Y cents}
```

Intercoin prompt

If the caller does not deposit coins in the specified timeout interval, the system routes the call to an operator. The caller can begin to deposit coins. If a timeout interval occurs between deposits before the deposit of the required amount, the DRAM plays the following announcement:

```
                 {X dollar(s)}
Please deposit  {X dollar(s) and Y cents} more.
                  {Y cents}
```

The DRAM can play this announcement more than one time for a call. The DRAM plays the announcement when the intercoin timeout interval occurs.

Acknowledgment of correct deposit

When a caller deposits the correct amount, the DRAM plays the “Thank you" announcement that acknowledges the deposit. After the DRAM plays the announcement, outpulsing to the called party begins. Disconnection of the CDC occurs. The call is floated.

Acknowledgment of overdeposit

If the caller overdeposits, the system records the credit. The DRAM plays the following announcement:

```
Thank you.  You have W cents credit towards overtime.
```

After the DRAM completes the announcement, outpulsing begins. The caller can overdeposit. If the caller wants to deposit the correct amount again, the caller must go on-hook to have the coins returned. The caller can perform this action anytime before the called party answers.

Deposits during announcements

The CDC monitors deposits during deposit requests. If the caller deposits a coin during any ACTS announcement, the system immediately terminates the announcement. If the caller deposits a coin during a “Thank you"

announcement, the system records the amount. The DRAM plays a new announcement that indicates the new credit amount. If the caller deposits a coin after the completion of a “Thank you " announcement, the system does not record the deposit. The caller can go on-hook any time before the called party answers to retrieve the deposited coins.

Subscriber abandon

If a caller abandons the call before the called party answers, the system returns any coins the caller deposits. The system takes the call down.

Calls without money due

If the call is not billable, the call routes according to current procedures. The routed call does not receive ACTS processing. An example of this type of call is a 1-800 call.

Operator assistance

If a caller wants to reach an operator, the caller can flash the switch hook to reach the operator. The caller can allow two consecutive timeout intervals to occur to reach an operator.

Coin notification

Notification occurs at the end of the initial period for coin calls. The system obtains and connects a DRAM and a 3-port conference circuit to the call. An alerting tone plays. The DRAM plays the following announcement:

```
Z minutes has ended.  Please signal when through.
```

Restrictions in the Limits section do not apply to coin notification.

Charge due contacts

Charge due contacts apply to overtime recalls during a call. Charge due contacts apply to the overtime recall at the end of a call. Most requirements in the Operation section apply to the automation of overtime charge due contacts. When the system obtains missing information, the system can automate the charge due contact. This action occurs for calls that require operator intervention. Examples of conditions that require operator intervention are ANI failure or non-machine ratability. The system can automate charge due contacts for person-to-person coin calls.

The sequence of deposit request, timing of coin deposits, prompting, and acknowledgment that applies to the initial contact are like charge due contacts. The announcement modification indicates that money is due for the earlier

Automatic Coin Toll Service (continued)

connection time. The timeouts are of different lengths. Charge due timeouts appear in the data design.

Charge due deposit request

If all conditions for automation apply, the system connects a DRAM, a CDC, and a 3-port conference circuit to the call. An alerting tone plays. The DRAM plays the following announcement without interruption in the conversation path.

```
  {X dollar(s)}
{X dollar(s) and Y cents please.} (CHARGE_DUE_ANNOUNCE
   {Y cents}                                MENT_DELAY)

                 {X dollar(s)}
 Please deposit  {X dollar(s) and Y cents}
                 {Y cents}
 for the past Z minutes.
```

If a caller overdeposits during the earlier collection sequence, the system automatically records the credit. The DRAM plays the following announcement to inform the caller that the system correctly processes the credits:

```
  You have W cents credit.
                 {X dollar(s)}
Please deposit  {X dollar(s) and Y cents} more
                 {Y cents}
for the past Z minutes.
```

After the charge due deposit request occurs, the deposit timing begins. If required, the prompt that paragraph “Intercoin Prompt" describes appears. If the caller satisfied the deposit request, the DRAM plays the “Thank you" announcement. Like the initial contact, the system connects an operator to the call if two consecutive timeouts occur without caller action. The system can connect an operator to the call if the caller flashes the switch hook. The system can connect an operator to the call if the caller goes on-hook during an announcement sequence. The two consecutive timeouts are in field CHARGE_DUE_TIMEOUT.

Overall timing for intermediate deposits

The connection between the calling and called party continues during intermediate coin collections. The caller deposits coins at a slow, steady rate.

The system uses a timing period COLLECT_TIME to prevent “free talk" during this coin collection. The deposit request occurs at the end of a specified time period from the end of the first charge due prompt. If the caller does not satisfy the deposit request, the system connects an operator to the call.

Acknowledgment of overdeposits

If the caller overdeposits during an intermediate deposit, the DRAM uses the same phrase and procedures for overdeposits during the initial contact. If the caller overdeposits at the end of the call, the DRAM only plays the “thank you" announcement. To obtain a refund, the caller must go on-hook. The caller must call the operator. If the caller anticipates that an overdeposit can occur, the caller can flash the switch hook. This action immediately connects the caller to the operator.

Walkaways

For example, the caller goes on-hook during a coin-paid call for which charges do not exceed the large charge amount. The DRAM was connected and the announcement sequence started. The system generates a ringback signal that causes the calling phone to ring. If the caller answers in RING_BACK_TIME, the DRAM plays the charge due announcement with a delay (RING_BACK_ANS_DELAY) at the beginning. This action allows the subscriber time to bring the receiver to an ear. If the caller does not answer in the specified RING_BACK_TIME, the following occurs. An operational measurement (OM) appears and the AMA report notes the walkaway. The system records the amount owed and the amount collected in the AMA record. If Bellcore AMA is in effect, a separate indication of the walkaway is present. The system does not connect an operator if the caller does not respond to an operator ringback. The system does not connect an operator if the caller did not respond to the machine-generated ringback. If the system connects an operator to the call and a walkaway occurs, the operator keys the walkaway CHG ADJ indicator. The CHG ADJ indicator indicates that the actions occurred. The TOPS uses this information to indicate the correct Station Signaling and Announcement Subsystem (SSAS) code.

A DRAM announcement began for charges due. If a caller goes on-hook during the announcement, the system brings the call to an operator.

Time and Charge (T&C) quotation

The ACTS can transfer the T&C quotations to the caller or the called user. This transfer depends on the user that pays for the call.

When a caller requests a T&C quotation for a call, the following occurs. The operator instructs the caller to remain off-hook at the end of the call. If the caller follows the instructions that the operator gives, the following occurs. A

Automatic Coin Toll Service (continued)

DRAM and a 3-port conference circuit are connected to the call. For the above action to occur, the caller must remain off-hook after the called party goes on-hook. A 2 s delay occurs. An alerting tone plays. The DRAM plays the following announcement:

```
                {X dollar(s)}
The charges are {X dollar(s) and Y cents} plus tax
                {Y cents}
  for Z minutes.
```

If the caller remains off-hook, the DRAM repeats the quote 3 s later. If one of the parties is on-hook at the end of the second announcement, the call terminates.

If the caller is on-hook at the end of the call before the DRAM starts the announcement, the following occurs. The system brings the call to an operator. The operator transfers the quotation. If the 2 s delay occurs, the following occurs. The DRAM starts the announcement and the caller goes on-hook. The system does not bring the call to an operator.

The same procedures are followed if the called user receives T&C announcements. In this condition, the operator instructs the called user to remain off-hook at the end of the call. The ACTS provides the T&C announcements.

The ACTS provide a T&C quotation. The AMA record records the information if Bellcore AMA format is in effect.

When ACTS provides an automatic T&C quotation, the following occurs. The standard T&C message is output on a TOPS Record teletypewriter associated with the toll office.

Non-coin notification

A caller can request that a non-coin call receive a notification message after a specified duration passes from an operator. If the caller requests this notification at the end of the interval, the following occurs. The system connects a DRAM and a 3-port conference circuit to the call. The DRAM plays the following announcement. An alerting tone: Z minutes has ended, plays before the DRAM plays the announcement.

ACTS flat rate charges

In some events, a call requires a flat rate charge, for example, a directory assistance call. The following DRAM announcement associates with flat rate calls:

Automatic Coin Toll Service (continued)

```
   {X dollar(s)}
{X dollar(s) and Y cents please.} (INITIAL_ANNOUNCEMENT
   {Y cents}                                      _DELAY)

                 {X dollar(s)}
  Please deposit {X dollar(s) and Y cents}
                 {Y cents}
```

ACTS Announcements

REASON (Refer to Note)	ANNOUNCEMENT
1	{X dollars}
	{X dollars and Y cents} please (INITIAL_ANNOUNCEMENT_DELAY)
	{Y cents}
	Please deposit X dollars
	{X dollars}
	{X dollars and Y cents}
	{Y cents}
	for the first Z minutes
2	Please deposit
	{X dollars}
	{X dollars and Y cents}
	{Y cents}
3	Please deposit
	{X dollars}
	{X dollars and Y cents} more
	{Y cents}
4	Thank you

Automatic Coin Toll Service (continued)

ACTS Announcements

REASON (Refer to Note)	ANNOUNCEMENT
5	Thank you. You have W cents credit towards overtime.
6	Z minutes has ended. Please signal when through.
7	Alerting tone
	{X dollars}
	{X dollars and Y cents} please (CHARGE_DUE_ANNOUNCEMENT_DELAY)
	{Y cents}
	Please deposit
	{X dollars}
	{X dollars and Y cents}
	{Y cents}
	for the past Z minutes.
8	Alerting tone
	Please deposit
	{X dollars}
	{X dollars and Y cents} please (CHARGE_DUE_ANNOUNCEMENT_DELAY)
	{Y cents}
	You have W cents credit.
	Please deposit
	{X dollars}
	{X dollars and Y cents} more
	for the past Z minutes
9	Alerting tone

ACTS Announcements

REASON (Refer to Note)	ANNOUNCEMENT
	The charges are
	{X dollars}
	{X dollars and Y cents} plus tax
	{Y cents}
	for the past Z minutes.
10	Alerting tone
	Z minutes has ended.

Reason

1. Initial deposit request
2. Initial coin prompt
3. Intercoin prompt
4. Acknowledgment of correct deposit
5. Acknowledgment of overdeposit
6. Coin notification
7. Charge due deposit request
8. Charge due deposit request, acknowledgment of overdeposit
9. T&C quotation
10. Non-coin (subscriber-requested) notification

Datafill

To use the ACTS feature, access the table TOPSACTS. The trunk group CLLI indexes table TOPSACTS. To index table TOPSACTS, associate a line with a trunk group. Use table TOPLNDIS for this purpose. A position type like TOPS or another type of interexchange carrier operator system indexes this table. The entry in the ZEROMPOS field for the LINEATTR entry of a line supplies the index for this table. Table TOPLNDIS associates the line with a TOPS trunk group CLLI. For example, observe the following entries in Table LINEATTR:

Automatic Coin Toll Service (continued)

MAP example for table LINEATTR

```
LNATTIDX    LCC CHGCLSS COST    SCRNCL  LTG     STS
  PRTNM    LCANAME  ZEROPOS HOT     TRAFSNO         MRSA
  SFC     LATANM
_____________________________________________________
0           CDF   NONE   LO      NSCR    0      919
COIN         RAL      TOPS   N        19            NIL
          NILLATA
```

If you enter the following data in the table TOPLNDIS, the TOPS entry in Table LINEATTR is an index to Table TOPLNDIS:

MAP example for table TOPLNDIS

```
              TLNKEY      CLLI
              ____________________
              TOPS        RALTODUR
```

The CLLI entry RALTODUR represents the TOPS trunk group CLLI.

Table OFCENG (Office Parameter TOPS_ACTS)

Office parameter TOPS_ACTS activates the ACTS feature when set to Y. Office parameter TOPS_ACTS does not activate the ACTS feature when set to N. The default value is N. Refer to the *Office Parameters Reference Manual*.

Table OFCVAR (Office Parameter TOPS_CLD_TIME_AND_CHG_NO_ACTS)

When this parameter is Y, the system routes the caller to an operator for time and charges. When set to N, the caller must remain off-hook. The caller must wait for a DRAM to quote the time and charges. The default value is N. Refer to the *Office Parameters Reference Manual*.

Table TOPSTRBL

New field SUSPCDC is added to Table TOPSTRBL. This entry is in use when the operator suspects that the CDC is defective.

When the operator keys KP TRBL 60 ST, the system marks the RCVRCOIN circuit as suspect. When three suspect CDC entries are associated with a specified RCVRCOIN circuit, the system calls a diagnostic. If the CDC fails the diagnostic, the system generates a TRK106 log report. If the CDC passes

the diagnostic, the system generates a TRK107 log report. Refer to *Log Report Reference Manual* for additional information on TRK106 and TRK107.

Table RECEIVER

Table RECEIVER defines receivers and contains information on audio tone detectors. For ACTS, the receiver is the CDC. In theory, the CDC resembles the receivers because the CDC connects to the calling station. The CDC analyzes tones and reports results. In ACTS, the CDC is like a receiver.

This table changes for ACTS to include a receiver (RCVRCOIN) for the CDC.

Call processing can use standard receiver utilities to obtain the CDC.

Refer to the TOPS Customer Data Design for additional information.

Table ACTSOPTS

This table contains the ACTS timeout parameters and ACTS variable parameters. If you enter data in this table, the field values default to the original parameters. See the data schema for a complete description of this table.

Table TOPSACTS

This table supports the ACTS feature.

To receive initial ACTS coin collection service, the caller must make calls from a coin phone that can generate coin deposit tones. These tones must have a dual frequency that the CDC can recognize.

Use table TOPSACTS to determine the ACTS compatibility of a coin phone. Table TOPSACTS is an extension of the TOPS trunk group data.

See the data schema for additional information.

Table SPLDNID

The Special Directory Number (DN) ID Table lists the DN of users with special services like Hotel, Motel, and Coin.

Use this table when you enter a value of MAYSERV in the ACTSSERV field of Table TOPSACTS. If the calling number is not in this table, the trunk on which the ACTS call arrived can be ACTS compatible. If the calling number is in the table, check the value ACTS_COMPATIBLE to determine ACTS compatibility.

See the data schema for additional information.

Automatic Coin Toll Service (continued)

DRAM datafill procedure

Because the system uses a DRAM with the ACTS feature, enter data in all DRAM-related tables.

DANGER

When you perform this task, make sure that other personnel in the office do not modify DRAMREC or DRAMTRK.

The following datafill sequence is for the DRAM tables:

1. Table CLLI
2. Table DRAMS
3. Table ANNS
4. Table ANNMEMS
5. CI increment DRAMREC
6. Table DRMUSERS

If these tables have data entries and you must make changes, follow the following special procedures in the order indicated:

1. Display and print the contents of DRAMUSER and DRAMREC.
2. Delete all ACTS tuples from Table DRMUSERS.
3. Delete all assigned ACTS tuples in DRAMREC.
4. Add new or changed ACTS tuples again with DRAMREC in the same order that appears in Step 1.
5. Add ACTS tuples again in Table DRMUSERS.

Example datafill for the ACTS environment appears in the following figure.

Notes:

- In Table DRAMS, the location of the cards in the DRAM shelf appears.
- The DRAMREC facility assigns specified phrase parts to specified locations on the DRAM. The facility assigns these phrase parts to define to the DRAM software the phrases that the DRAM can play. For ACTS to

perform in an office, add and assign new phrases to a specified card on a DRAM. The system normally assigns phrases at load build time.

- In Table DRMUSERS, the different ACTS announcements are linked and assigned.

MAP example for table CLLI

```
CLLI    TRKGRPSIZ  ADMININF
_____________________________________________________________________
ACTSTOPS    13         XX
```

MAP example for table TOPLNDIS

```
                TLNKEY      CLLI
                ____________________
                TOPS        RALTODUR
```

MAP example for table ANNS

```
   CLLI      ANTYPE   TRAFSNO   MAXCON   CYTIME   MAXCY
   ------------------------------------------------------
   ACTSTOPS    ACTS     25         1        0        1
```

MAP example for table ANNMEMS

```
ANNMEMBER         HDWTYPE         CARD       TRACKLIST
------------------------------------------------------------
ACTSTOPS 0          DRAM          DRA     0 MTM     0  2   $
ACTSTOPS 1          DRAM          DRA     0 MTM     0  4   $
ACTSTOPS 2          DRAM          DRA     0 MTM     0  6   $
ACTSTOPS 3          DRAM          DRA     0 MTM     0  8   $
```

MAP example for table DRAMS

```
 DRAMKEY TMTYPE TMNO TMCKT CARDCODE CARDINFO
_____________________________________________________________
   0 0    MTM      0    0    1X75BA  CTLR  DRAM0
   0 1    MTM      0    2    1X76CA  PROM 0 1
```

Automatic Coin Toll Service (continued)

Sample DRAMREC Input (Part 1 of 2)

DRAMREC

DRAM	PHRASENAME	LENGTH	BLOCK	PHRASENO
ASSIGN 0	ACTS_PAUSE	1	0	0
ASSIGN 0	ACTS_1	1	0	49
ASSIGN 0	ACTS_2	1	0	50
ASSIGN 0	ACTS_3	1	0	51
ASSIGN 0	ACTS_4	1	0	52
ASSIGN 0	ACTS_5	1	0	53
ASSIGN 0	ACTS_6	1	0	54
ASSIGN 0	ACTS_7	1	0	55
ASSIGN 0	ACTS_8	1	0	56
ASSIGN 0	ACTS_9	1	0	57
ASSIGN 0	ACTS_10	1	0	16
ASSIGN 0	ACTS_11	1	0	17
ASSIGN 0	ACTS_12	1	0	18
ASSIGN 0	ACTS_13	1	0	19
ASSIGN 0	ACTS_14	1	0	20
ASSIGN 0	ACTS_15	1	0	21
ASSIGN 0	ACTS_16	1	0	22
ASSIGN 0	ACTS_17	1	0	23
ASSIGN 0	ACTS_18	1	0	24
ASSIGN 0	ACTS_19	1	0	25
ASSIGN 0	ACTS_20	1	0	32
ASSIGN 0	ACTS_30	1	0	33
ASSIGN 0	ACTS_40	1	0	34
ASSIGN 0	ACTS_50	1	0	35
ASSIGN 0	ACTS_60	1	0	36
ASSIGN 0	ACTS_70	1	0	37
ASSIGN 0	ACTS_80	1	0	38
ASSIGN 0	ACTS_90	1	0	39
ASSIGN 0	ACTS_DOLLAR	1	0	42
ASSIGN 0	ACTS_DOLLARS	1	0	43
ASSIGN 0	ACTS_AND	1	0	46
ASSIGN 0	ACTS_CENTS	1	0	45
ASSIGN 0	ACTS_MINUTE	1	0	9
ASSIGN 0	ACTS_MINUTES	1	0	10
ASSIGN 0	ACTS_ALERT	1	0	5
ASSIGN 0	ACTS_MORE	1	0	47
ASSIGN 0	ACTS_NICKEL	1	1	22
ASSIGN 0	ACTS_DIME	1	1	23
ASSIGN 0	ACTS_QUARTER	1	1	24

Automatic Coin Toll Service (continued)

Sample DRAMREC Input (Part 2 of 2)

DRAMREC

DRAM	PHRASENAME	LENGTH	BLOCK	PHRASENO
ASSIGN 0	ACTS_PLEASE	1	1	8
ASSIGN 0	ACTS_PLS_DEPOSIT	1	1	9
ASSIGN 0	ACTS_FOR_FIRST	1	1	10
ASSIGN 0	ACTS_THANK_HAVE	1	1	11
ASSIGN 0	ACTS_CR_OVERTIME	1	1	12
ASSIGN 0	ACTS_THANK_YOU	1	1	13
ASSIGN 0	ACTS_END_SIGNAL	1	1	14
ASSIGN 0	ACTS_FOR_PAST	1	1	15
ASSIGN 0	ACTS_CHARGES_ARE	1	1	16
ASSIGN 0	ACTS_PLUS_TAX	1	1	17
ASSIGN 0	ACTS_HAS_ENDED	1	1	18
ASSIGN 0	ACTS_TST_ENDED	1	1	25
ASSIGN 0	ACTS_FOR_NEXT	1	1	26
ASSIGN 0	ACTS_YOU_HAVE	1	1	35
ASSIGN 0	ACTS_CREDIT	1	1	36
ASSIGN 0	ACTS_TST_DEPOSIT	1	1	37

Automatic Coin Toll Service (continued)

MAP example for table DRMUSERS

```
ACTSTOPS    1   ACTS_VAR_CHARGE ACTS_PLEASE ACTS_PAUSE +
                ACTS_PLS_DEPOSIT ACTS_VAR_CHARGE +
    ACTS_FOR_FIRST ACTS_VAR_PERIOD $
ACTSTOPS    2   ACTS_PLS_DEPOSIT ACTS_VAR_CHARGE $
ACTSTOPS    3   ACTS_PLS_DEPOSIT_ACTS_VAR_CHARGE$ACT_MORE $
ACTSTOPS    4   ACTS_THANK_YOU $
ACTSTOPS    5   ACTS_THANK_HAVE ACTS_VAR_CREDIT +
    ACTS_CR_OVERTIME $
ACTSTOPS    6   ACTS_ALERT ACTS_VAR_PERIOD ACTS_END_SIGNAL $
ACTSTOPS    7   ACTS_ALERT ACTS_VAR_CHARGE ACTS_PLEASE
    ACTS_PAUSE ACTS_PLS_DEPOSIT ACTS_VAR_CHARGE+
    ACTS_FOR_PAST  ACTS_VAR_PERIOD $
ACTSTOPS    8   ACTS_ALERT ACTS_VAR_CHARGE ACTS_PLEASE+
    ACTS_PAUSE ACTS_YOU_HAVE ACTS_VAR_CREDIT+
    ACTS_CREDIT ACTS_PLS_DEPOSIT+
    ACTS_VAR_CHARGE ACTS_MORE ACTS_FOR_PAST+
    ACTS_VAR_PERIOD $
ACTSTOPS    9   ACTS_ALERT ACTS_CHARGES_ARE ACTS_VAR_CHARGE
            ACTS_PLUS_TAX ACTS_VAR_PERIOD $
ACTSTOPS    10  ACTS_ALERT ACTS_VAR_PERIOD
    ACTS_HAS_ENDED $
ACTSTOP 11  ACTS_TST_DEPOSIT ACTS_VAR_COIN $
ACTSTOPS    12  ACTS_VAR_COIN $
ACTSTOPS    13  ACTS_TST_END
```

AL0011 - ACTS Coin tone generator test

This feature tests the ability of coin phones to generate coin tones that indicate the deposit of coins. These coins can be nickels, dimes and quarters.

The operating company personnel dials a number for datafill from a coin phone to cause the Coin Test. The operating company personnel must dial the number the method the operating company wants. This method must route the call to a TOPS ACTS switch. The operating company personnel dial standard ACTS calls as 1 + CLD.

The operating company personnel listens for prompts and deposits the correct coins. If the test detects the coin tone correctly, the operating company personnel hears an acknowledgment, like “Thank-you, nickel test has ended." The test prompts the operating company personnel to deposit the next coin in a circular nickel-dime-quarter sequence. The operating company personnel hears an end-of-cycle alert tone after the quarter test to indicate the end of a nickel-dime-quarter sequence. The system does not generate logs as a result of successful tests or tests that are not complete.

Automatic Coin Toll Service (continued)

If the test does not detect the coin tone correctly, the operating company personnel hears a failure alert tone. Detection does not occur before datafillable timeout. The test prompts the operating company personnel to deposit the next coin. If the operating company personnel deposit a coin that is not correct that the test detects, the timeout period is reset. The operating company personnel have another chance to correctly deposit the appropriate coin.

The operating company personnel can go off-hook at any time to end the test and receive back all coins deposited. The operating company personnel can hang up before the end of a nickel-dime-quarter sequence. A hang-up does not cause a failure unless following occurs. A failure occurs if the operating company personnel fail to hang up before the operating company personnel hear the failure alert tone. The next coin denomination prompt starts.

The ACTS Coin Tone Generation Tests can be performed at the same time. There is no limit on the number of tests performed at the same time, unless the following condition is present. For these tests to perform at the same time, an ACTS DRAM or CDC must be available for test purposes. If an ACTS DRAM or CDC is not available, the following occurs. The test aborts and the call routes to treatment No Service Circuit (NOSC). The NOSC is in table TMTCNTL. The system generates current TRK138 (TRMT) logs. Enter correct data in table TMTCNTL to turn the TRK138 (TRMT) log on or off.

Calls from non-coin phones or any phone that cannot make ACTS calls are blocked and routed to treatment Re-Order (RODR). The RODR is in table TMTCNTL.

A switchhook flash causes the coin test call to end, like an on-hook occurred. The coin test call does not go to a TOPS position.

The ACTS Coin Tone Generation Test generates an AMA record with the call marked as not answered.

New value 060 is for the ORIG CALL TYPE field for the new call origination type for the Coin Test. The ORIG CALL TYPE is associated with Module Code 311.

The following is an example of an AMA record.

Automatic Coin Toll Service (continued)

```
HEX ID:AA  STRUCTURE CODE:40752C  CALL CODE:192C
SENSOR TYPE:036C  SENSOR ID:0123456C
REC OFFICE TYPE:036C  REC OFFICE ID:0123456C
DATE:20501C  TIMING IND:00000C  STUDY IND:0200000C
SERVICE OBSERVED:0C  ORIG NPA:619C
ORIG NUMBER:5210003C  CONNECT TIME:1158350C
ELAPSED TIME:000000000C  OPERATOR IDS:0003101003101C
ACC OPERATOR WORK TIME:00000C  SERVICE FEATURE:001C
STATION SIGNALING IND:2C  SCREENING CODE:000C
CALLED NUMBER INPUT:1C  CALLING NUBER SOURCE:1C
MODULE CODE:316C  LOCAL INDICATOR:1C
MODULE CODE:311C  ORIG CALL TYPE:060C
MODULE CODE:051C  OVERSEAS IND:1C  TERM NPA:00619C
TERM NUMBER:2214321C  COMPLETION IND:008C
RATE IND:1C  OSS CALL COMPLETION CONDITIONS:3111110C
MODULE CODE:000C
```

Table TOPS

A TOPS call origination type (COINTEST) is added to Table TOPS. The COINTEST provides an identifier for the ACTS Coin Tone Generation Test calls. The following is the new default tuple in Table TOPS:

MAP example for table TOPS

```
CO           DISPLAY     NOAMA   POSTYPE     SERVTYPE
_____________________________________________________
COINTEST        S          Y       GEN         TASERV
```

Do not change this tuple.

The following are tables and tuple fields that the extension of the CALL_ORIGINATION type affects:

Automatic Coin Toll Service (continued)

Table	Field	New value
TOPS	CO	COINTEST
ADACCOPT	COTYPE	COINTEST
TOPSAMA	CO	COINTEST
AMASRVID	COTYPE	COINTEST
DABILL	COTYPE	COINTEST
TOPSOIC	CO	COINTEST
ACTSOPTS	OPTION	ACTS_COIN_TEST__TIME_OUT

Table HNPACONT

All translations must use Table HNPACONT to provide routes of test calls for this feature. The following is the new entry in subtable HNPACONT.RTEREF:

MAP example for table HNPACONT

```
RTE                                RTELIST
_______________________________________
<rte>                    T TOPS COINTEST
```

You can enter test numbers in subtable HNPACONT.HNPACODE to the maximum number in the current table control. You can enter the numbers in the control even if you dial the same number to cause simultaneous tests. Enter one number for each office. The following is the format of the new entry in subtable HNPACONT.HNPACODE:

MAP example for table HNPACONT

```
FROMDIGS    TODIGS      CDRR    TMT
_____________________________________
<test#>     <test#>     HRTE    <rte>
```

Table DRMUSERS

Table DRMUSERS contains three changed phrases:

Automatic Coin Toll Service (continued)

MAP example for table DRMUSERS

```
CLLI        ANNUM                PHRASES
_____________________________________________________________
ACTSTOPS     11   ACTS_PLS_DEPOSIT  ACTS_1  ACTS_VAR_COIN $
ACTSTOPS     12   ACTS_PAUSE  ACTS_ALERT  $
ACTSTOPS     13   ACTS_THANK_YOU  ACTS_VAR_COIN  +
                  ACTS_TST_ENDED  $
```

Table TMTCNTL

Enter the data in NOSC and RODR that the operating company wants. You can enter data in the TRK138 (TRMT) log to turn the log on or off.

Table ACTSOPTS

Table ACTSOPTS contains a new datafillable timeout value (ACTS_COIN_TEST_TIME_OUT) for the ACTS Coin Tone Generation Test. The timeout value is the length of time in seconds the system waits after the end of a prompt for a deposit. The system waits this long before the system determines test failure. The recommended timeout and default timeout value is 4 s. The data range allowed is 1-60. You can dynamically modify the ACTS_COIN_TEST_TIME_OUT without a switch restart.

Table RECEIVER

You can enter data in table RECEIVER with the new ACTS CDC (RCVRCOIN) card code 3X08AB. This card code allows the posting and tests of the enhanced card.

Table TOPSPARM

Table TOPSPARM new parameter ACTS_DOLLAR_COINTEST allows dollar tests for phones that accept dollars.

BK04339 - Tenths of seconds timer for rated calls (BCS36)

Tenths of seconds time accuracy is in use on rated calls. The rated calls are coin, hotel, and time and charges.

The TOPS rating calculates charges for coin, hotel, and time and charge calls based on the duration of the call. Call duration is the amount of time the caller and called user talk. Earlier, call duration was accurate to seconds. The TOPS rating used seconds time accuracy to calculate charges.

Call duration appears on the AMA record as the elapsed time. The elapsed time is accurate to tenths of seconds.

Automatic Coin Toll Service (continued)

The seconds accuracy of TOPS rating and the tenths of seconds accuracy of the elapsed time presents an error in the calculation of charges. When a call crosses into the next time period appears in the elapsed time. The amount of charge in the AMA record indicates that the call did not cross to another time period. The PRSDOC must conform the TOPS rating to a tenths of seconds time accuracy.

Before this PRSDOC, a call that ended at one tenth of a second in a minute period was not charged for that period. Currently, at one tenth of a second in a minute period, the call is charged for the minute period that appears in the following figure.

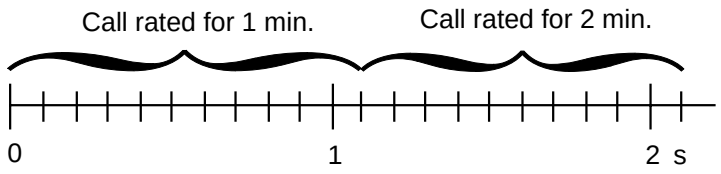

New call duration measured with 1/10 s accuracy

For coin calls, table ACTSOPTS determines initial and recall periods. Table CHARGE determines initial and overtime periods for hotel and time and charges.

Information on time and charges calls is in package TOPS Call Processing Features (rating), OSB00101.

Activation and Verification

Change the value of the TOPS_ACTS office parameter to Y to activate the ACTS feature. See the description of this office parameter in this part.

Hardware tests require the CDC in the earlier documents. Hardware tests require a DRAM that can play ACTS messages.

You can verify the ACTS feature for each trunk group in Table TOPSACTS.

Translations table flow

The Automatic Coin Toll Service translation process appears in the following flowchart.

Automatic Coin Toll Service (continued)

Table flow for Automatic Coin Toll Service

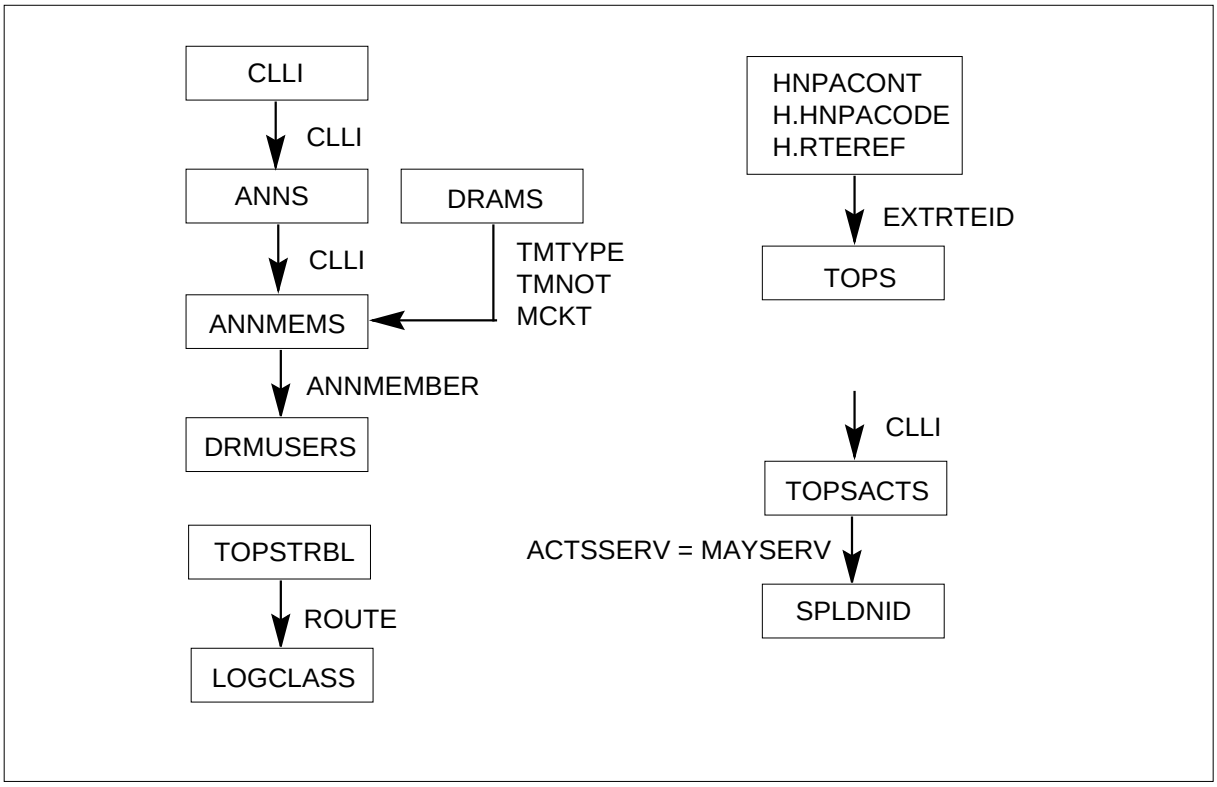

Limits

The following limits apply to Automatic Coin Toll Service:

- The conditions for automation in Operation must occur for ACTS processing to occur.
- In DMS-100/200 offices, 1FR lines, coin lines, and hotel lines can connect to TOPS without a looparound trunk requirement. The ACTS is compatible with this action. The limit that prevents the connection of lines to TOPS in a TOPS Equal Access office applies. Refer to GFX187AA for additional information on the TOPS Equal Access feature.

AL0011 - ACTS Coin tone generator test

The following are specified conditions about the ACTS Coin tone generator test:

- The ACTS cannot test calls from phones that are not ACTS compatible (like feature BV1860) or cannot access a Toll Switch with ACTS ability.
- The ACTS blocks calls from non-coin phones or a phone that normally cannot make ACTS calls.

- The ACTS allows calls from coin phones without an intermediate coin hopper for tests. Coins do not return.
- The ACTS cannot obtain calls in which a CLG ANI (Automatic Number Identification) are allowed for tests. The failure log does not contain the CLG number.
- An ACTS DRAM and CDC must be available for test purposes.
- The system can generate false failure logs because of loss or corruption of signals in the transmission path. An example of this action is the CDC used for tests.
- A number of nickel-dime-quarter test sequences can occur. The coin hopper fills up to prevent additional deposits. The operating company personnel must hang up and restart to continue tests on that phone. If the intermediate hopper fills up during the Coin Test, some coins can spill in the coin box. These coins are collected and not returned.
- Table TOPS contains a tuple with a new call origination type of COINTEST. Specified fields in the tuple are entered and ignored.
- Controlled limits to the number of ACTS Coin Tone Generation Tests that can perform at the same time. Review office provisioning for CDCs and DRAMs to consider increased use because of tests.
- The Coin Test automatically ends after 2 min. The test ends like the caller goes on-hook to retain resources like the CDC and DRAM. This action prevents the CDC and DRAM from allocation for very long periods. A standard test call completes in approximately 10 s.
- The coin test route datafill cannot include InterLATA translations.

Interactions

The following paragraphs describe the interactions between Automatic Coin Toll Service and other functionalities.

TOPS Alternate Announcement, OSB00101 is associated, but not required, with ACTS. TOPS Alternate Announcement allows the recording of customized differences of an announcement. This alternate announcement is for any call state. This alternate announcement must not affect the announcement for any other call state. For example, you can customize the “Thank you" announcement to include the name of the operating company and played on an initial call. You can play non-customized “Thank you" announcement later in the call sequence.

In the past, to change an announcement for one stage of the call changed all stages of the call. To use the example in the earlier paragraph, the customized announcement played for all stages of the call. The announcement played

Automatic Coin Toll Service (continued)

where the “Thank you" announcement was required, not only on the initial call.

This feature applies to Mechanized Calling Card Service (MCCS) and ACTS announcements.

If optional feature AF1715 TOPS Expanded BellCore AMA Format (EBAF) Extension in package TOPS EBAF, OSB00101, is present, the following condition occurs. The AMA ORIG CALL TYPE changes are in effect.

Activation/deactivation by the end user

The Automatic Coin Toll Service does not require activation or deactivation by the end user.

Billing

Automatic Coin Toll Service uses standard TOPS AMA.

The following SSAS codes are added in the TOPS BC AMA format. The codes are added if the operator assumes that an entry of 1 in Table TOPSTRBL is a suspected fraud. The operator assumes that an entry of 1 in Table CHGADJKY is a walkaway.

- 12—Handled by ACTS and operator suspected fraud. The ACTS handled and recalled the call to the operator through a subscriber flash or timeout. The operator suspected fraud and keyed the correct trouble code in Table CHGADJKY to indicate this suspicion.
- 22—Handled by ACTS operator override and operator suspected fraud. The ACTS handled and recalled the call to the operator. The operator overrode the CDC and indicated a suspected fraud.
- 28—Handled by ACTS operator override. The ACTS handled and recalled the call to the operator. The operator overrode the CDC.
- 52—Handled by ACTS, operator entered walkaway, and operator suspected fraud. The ACTS handled and recalled a call to the operator for a walkaway. The operator entered a walkaway with the correct charge adjust digit in Table CHGADJKY. The operator suspected fraud during the call.
- 58—Handled by ACTS and operator entered walkaway.
- 62—Handled by ACTS operator override, operator entered walkaway, operator suspected fraud. The ACTS handled the call. The operator, in this sequence, overrode the CDC, entered a walkaway, and entered suspected fraud.

- 92—Handled by ACTS, which detected walkaway and operator suspected fraud. The ACTS handled the call that detected the walkaway. The operator suspected fraud during the call.
- 98—Handled by ACTS and ACTS detected the walkaway.

If ACTS cannot obtain a DRAM, CDC, or a 3-port conference circuit for an ACTS call, the following occurs. The ACTS routes the call to a TOPS operator.

The ACTS creates the value 060 for the ORIG CALL TYPE field for the new call origination type for the Coin Test. The ORIG CALL TYPE is associated with Module Code 311.

The following is an example of an AMA record.

Example of an AMA record

```
HEX ID:AA  STRUCTURE CODE:40752C  CALL CODE:192C
SENSOR TYPE:036C  SENSOR ID:0123456C
REC OFFICE TYPE:036C  REC OFFICE ID:0123456C
DATE:20501C  TIMING IND:00000C  STUDY IND:0200000C
SERVICE OBSERVED:0C  ORIG NPA:619C
ORIG NUMBER:5210003C  CONNECT TIME:1158350C
ELAPSED TIME:000000000C  OPERATOR IDS:0003101003101C
ACC OPERATOR WORK TIME:00000C  SERVICE FEATURE:001C
STATION SIGNALING IND:2C  SCREENING CODE:000C
CALLED NUMBER INPUT:1C  CALLING NUBER SOURCE:1C
MODULE CODE:316C  LOCAL INDICATOR:1C
MODULE CODE:311C  ORIG CALL TYPE:060C
MODULE CODE:051C  OVERSEAS IND:1C  TERM NPA:00619C
TERM NUMBER:2214321C  COMPLETION IND:008C
RATE IND:1C  OSS CALL COMPLETION CONDITIONS:3111110C
MODULE CODE:000C
```

AL0011 - ACTS Coin tone generator test

The ACTS Coin Tone Generation Test generates an AMA record with the call marked as not answered.

If TOPS EBAF, OSB00101, is present, ACTS creates the value 061 for the ORIG CALL TYPE field for the new call origination type for the Coin Test. The ORIG CALL TYPE is associated with Module Code 311.

Station Message Detail Recording

The Automatic Coin Toll Service does not affect Station Message Detail Recording.

Automatic Coin Toll Service (continued)

Datafilling office parameters

The office parameters that Automatic Coin Toll Service uses appear in the following table. Refer to *Office Parameters Reference Manual* for additional information about office parameters.

Office parameters by Automatic Coin Toll Service

Table name	Parameter name	Explanation and action
OFCENG	TOPS_ACTS	If set to Y, office parameter TOPS_ACTS activates the ACTS feature. If the parameter is N, the system does not activate the ACTS feature. The default value is N. Refer to *Office Parameters Reference Manual.*
OFCVAR	TOPS_CLD_TIME_AND_CHG_NO_ACTS	When this parameter is Y, the system routes the called party to an operator for time and charges. When this parameter is N, the called party must remain offhook and wait for a DRAM to quote the time and charges. The default value is N. Refer to *Office Parameters Reference Manual.*

Datafill sequence

The following table lists the tables that require datafill to implement Automatic Coin Toll Service. The tables appear in the correct entry order.

Datafill requirements for Automatic Coin Toll Service

Table	Purpose of table
CLLI	Common Language Location Identifier. The CLLI identifies the far end of each announcement, tone, trunk group, test trunk, national milliwatt test lines, and service circuit.
LINEATTR	Line routing to TOPS.
TOPLNDIS	Associates a line with a trunk group.
HNPACONT	Call routing.

Automatic Coin Toll Service (continued)

Datafill requirements for Automatic Coin Toll Service

Table	Purpose of table
TOPS	Traffic Operator Position System. Use TOPS during translations to determine the type of service that a call requires based on the call origination type.
TMTCNTL	Treatment Control
TOPSTRBL	TOPS Operator Reporting Trouble Disposition
RECEIVER	Defines receivers and contains information on audio tone detectors
ACTSOPTS	ACTS Timeout Parameters. Contains the ACTS timeout parameters and ACTS different parameters.
TOPSACTS	Supports the ACTS feature
SPLDNID	Special Directory Number ID. Lists the DN of subscribers with special services like Hotel, Motel, and Coin.
DRAMS	Digital Recorded Announcement Machine
ANNS	Announcements.
ANNMEMS	Announcement members
CI increment DRAMREC	DRAM utility
DRMUSERS	DRAM users
TOPSPARM	TOPS parameter allows dollar coin tests

Datafilling table CLLI

Datafill example for table CLLI

Sample datafill for table CLLI appears in the following example.

MAP example for table CLLI

```
CLLI    TRKGRPSIZ  ADMININF
_____________________________________________________________
ACTSTOPS    13         XX
```

Datafilling table LINEATTR

Datafill for Automatic Coin Toll Service for table LINEATTR appears in the following table. The fields that apply to Automatic Coin Toll Service appear

Automatic Coin Toll Service (continued)

in this table. See the data schema section of this document for a description of the other fields.

Datafilling table LINEATTR

Field	Subfield or refinement	Entry	Explanation and action
ZEROMPOS		TOPS	This field entry indexes table TOPLNDIS

Datafill example for table LINEATTR

Sample datafill for table LINEATTR appears in the following example.

MAP example for table LINEATTR

```
LNATTIDX    LCC CHGCLSS COST    SCRNCL  LTG     STS
  PRTNM    LCANAME  ZEROPOS HOT     TRAFSNO         MRSA
  SFC     LATANM
_____________________________________________________
0           CDF   NONE   LO      NSCR    0       919
COIN         RAL      TOPS   N        19             NIL
          NILLATA
```

Datafilling table TOPLNDIS

Datafill example for table TOPLNDIS

If you enter data in table TOPLNDIS as follows, the TOPS entry in table LINEATTR is an index in table TOPLNDIS.

Sample datafill for table TOPLNDIS appears in the following example.

MAP example for table TOPLNDIS

```
                TLNKEY      CLLI
                ____________________
                TOPS        RALTODUR
```

The CLLI entry RALTODUR represents the TOPS trunk group CLLI.

Datafilling table HNPACONT

All translations must use table HNPACONT to provide test calls that route for this feature. The following can be the new entry in subtable HNPACONT.RTEREF.

Datafill examples for subtables HNPACONT.RTEREF and HNPACONT.HNPACODE

Sample datafill for subtable HNPACONT.RTEREF appears in the following example.

MAP example for subtable HNPACONT.RTEREF

```
RTE                                RTELIST
_____________________________________________
<rte>                       T TOPS COINTEST
```

You can enter test numbers in subtable HNPACONT.HNPACODE to the maximum number in the current table control. You can dial the same number to cause simultaneous tests. Enter only one number for each office. The following is the format of the new entry in subtable HNPACONT.HNPACODE:

Sample datafill for table HNPACONT.HNPACODE appears in the following example.

MAP example for table HNPACONT.HNPACODE

```
FROMDIGS    TODIGS      CDRR    TMT
_____________________________________
<test#>     <test#>     HRTE    <rte>
```

Datafilling table TOPS

Datafill for Automatic Coin Toll Service for table TOPS appears in the following table. The fields that apply to Automatic Coin Toll Service appear in this table. See the data schema section of this document for a description of the other fields.

Datafilling table TOPS

Field	Subfield or refinement	Entry	Explanation and action
CO		COINTEST	Add a new TOPS call origination type (COINTEST) to Table TOPS to provide an identifier for the ACTS Coin Tone Generation Test calls.

Automatic Coin Toll Service (continued)

Datafill example for table TOPS

Sample datafill for the new default tuple in table TOPS appears in the following example.

MAP example for table TOPS

```
CO          DISPLAY     NOAMA   POSTYPE     SERVTYPE
_____________________________________________________
COINTEST        S         Y       GEN         TASERV
```

Do not change this tuple.

Datafilling table TMTCNTL.TREAT

Datafill for Automatic Coin Toll Service for table TMTCNTL.TREAT appears in the following table. The fields that apply to Automatic Coin Toll Service appear in this table. See the data schema section of this document for a description of the other fields.

Datafilling table TMTCNTL.TREAT

Field	Subfield or refinement	Entry	Explanation and action
TREATMT		NOSC, RODR	Enter the data in NOSC and RODR that the operating company wants. You can enter data in the TRK138 (TRMT) log to turn the log on or off.

Datafilling table TOPSTRBL

New field SUSPCDC is added to Table TOPSTRBL. The system uses this entry when the operator suspects that the CDC is defective.

When the operator keys KP TRBL 60 ST, this procedure marks the RCVRCOIN circuit as suspect. When three suspect CDC entries are associated with a specified RCVRCOIN circuit, the system calls a diagnostic. If the CDC fails the diagnostic, the system generates a TRK106 log report. If the CDC passes the diagnostic, the system generates a TRK107 log report. Refer to the *Log Report Reference Manual* for additional information on TRK106 and TRK107.

Datafill for Automatic Coin Toll Service for table TOPSTRBL appears in the following table. The fields that apply to Automatic Coin Toll Service appear

in this table. Refer to the data design section of this document for a description of the other fields.

Datafilling table TOPSTRBL

Field	Subfield or refinement	Entry	Explanation and action
DISPOSN		SUSPCDC	The system uses this new entry when the operator suspects that the CDC is defective.

Datafilling table RECEIVER

Table RECEIVER defines receivers and contains information on audio tone detectors. For ACTS, the receiver is the CDC. In theory, the CDC resemble the receivers because the CDC connects to the calling station. The CDC analyzes tones and reports results. In ACTS, the CDC are treated as receivers.

Datafill for Automatic Coin Toll Service for table RECEIVER appears in the following table. The fields that apply to Automatic Coin Toll Service appear in this table. See the data schema section of this document for a description of the other fields.

Datafilling table RECEIVER

Field	Subfield or refinement	Entry	Explanation and action
CLLI		RCVRCOIN	You can enter data in table RECEIVER with the new ACTS CDC (RCVRCOIN) card code 3X08AB. This card code allows posting and tests of the enhanced card.
CARDCODE		3X08AB	

Datafilling table ACTSOPTS

This table contains the ACTS timeout parameters and ACTS variable parameters. If you do not enter data in this table, the field values default to the original parameters.

Datafill for Automatic Coin Toll Service for table ACTSOPTS appears in the following table. The fields that apply to Automatic Coin Toll Service appear

Automatic Coin Toll Service (continued)

in this table. See the data schema section of this document for a description of the other fields.

Datafilling table ACTSOPTS

Field	Subfield or refinement	Entry	Explanation and action
OPTION		ACTS_COIN_TEST_TIME_OUT	Table ACTSOPTS contains a new timeout value (ACTS_COIN_TEST_TIME_OUT) for the ACTS Coin Tone Generation Test that you can enter. The timeout value is the length of time, in seconds, the test waits after the end of a prompt for a deposit before the test determines that the test failed. The recommended and default timeout value is 4 s. The range allowed is 1-60. You can dynamically modify the ACTS_COIN_TEST_TIME_OUT without requiring a switch restart.

Datafilling table TOPSACTS

This table supports the Automatic Coin Toll Service (ACTS) feature.

To receive initial ACTS coin collection service, the caller must make calls from a coin phone. This coin phone can generate tones of the dual frequency coin deposit that the CDC can recognize.

Use table TOPSACTS to determine the ACTS compatibility of a coin phone. Table TOPSACTS is an extension of the TOPS trunk group data.

Datafilling table SPLDNID

The Special DN ID Table lists the DN of subscribers with special services like Hotel, Motel, and Coin.

Datafill for Automatic Coin Toll Service for table SPLDNID appears in the following table. The fields that apply to Automatic Coin Toll Service appear

in this table. See the data schema section of this document for a description of the other fields.

Datafilling table SPLDNID

Field	Subfield or refinement	Entry	Explanation and action
ACTS_COMPATIBLE		ACTS or NOACTS	This table is in use when you enter a value of MAYSERV in the ACTSSERV field of Table TOPSACTS. If the calling number is not in this table, the trunk on which the ACTS call arrived must be ACTS compatible. If the calling number is in the table, the value ACTS_COMPATIBLE is checked to determine ACTS compatibility.

DRAM datafill procedure

Because you use a DRAM with the ACTS feature, enter all DRAM-related tables.

DANGER

When you perform this task, make sure that another person in the office does not modify DRAMREC or DRAMTRK.

The following is the datafill sequence for the DRAM tables:

1. Table CLLI
2. Table DRAMS
3. Table ANNS
4. Table ANNMEMS
5. CI increment DRAMREC
6. Table DRMUSERS

If you enter data in these tables and you must make changes, follow the following special procedures in the order indicated:

1. Display and print the contents of DRAMUSER and DRAMREC
2. Delete all ACTS tuples from Table DRMUSERS

Automatic Coin Toll Service (continued)

3. Delete all assigned ACTS tuples in DRAMREC
4. Add new or changed ACTS tuples again with DRAMREC in the same order that appears in Step 1
5. Add ACTS tuples again in Table DRMUSERS

Example datafill for the ACTS environment appear in the following figures.

Note 1: Table DRAMS defines the location of the cards in the DRAM shelf.

Note 2: The DRAMREC facility assigns specified phrase parts to specified locations on the DRAM. The facility assigns these phrase parts to define to the DRAM software the phrases that the DRAM can play. For ACTS to perform in an office, add and assign new phrases to a specified card on a DRAM. The system normally assigns phrases at load build time. Sample datafill that assigns the ACTS phrases to logical cards 0 and 1 appears in the following figure.

Note 3: In Table DRMUSERS, the different ACTS announcements are linked and assigned.

Datafilling table DRAMS

Datafill example for table DRAMS

Sample datafill for table DRAMS appears in the following example.

MAP example for table DRAMS

```
DRAMKEY TMTYPE TMNO TMCKT CARDCODE CARDINFO
_____________________________________________________
  0 0    MTM      0    0    1X75BA  CTLR  DRAM0
  0 1    MTM      0    2    1X76CA  PROM 0 1
```

Datafilling table ANNS

Datafill example for table ANNS

Sample datafill for table ANNS appears in the following example.

MAP example for table ANNS

```
CLLI              ANTYPE   TRAFSNO   MAXCON   CYTIME   MAXCY
-----------------------------------------------------------------
ACTSTOPS           ACTS       25       1       0          1
```

Datafilling table ANNMEMS

Datafill example for table ANNMEMS

Sample datafill for table ANNMEMS appears in the following example.

MAP example for table ANNMEMS

```
ANNMEMBER          HDWTYPE          CARD       TRACKLIST
-------------------------------------------------------------------
ACTSTOPS 0             DRAM           DRA      0 MTM      0  2    $
ACTSTOPS 1             DRAM           DRA      0 MTM      0  4    $
ACTSTOPS 2             DRAM           DRA      0 MTM      0  6    $
ACTSTOPS 3             DRAM           DRA      0 MTM      0  8    $
```

Datafilling CI increment DRAMREC

Automatic Coin Toll Service (continued)

Sample DRAMREC Input (Part 1 of 2)

DRAMREC

DRAM	PHRASENAME	LENGTH	BLOCK	PHRASENO
ASSIGN 0	ACTS_PAUSE	1	0	0
ASSIGN 0	ACTS_1	1	0	49
ASSIGN 0	ACTS_2	1	0	50
ASSIGN 0	ACTS_3	1	0	51
ASSIGN 0	ACTS_4	1	0	52
ASSIGN 0	ACTS_5	1	0	53
ASSIGN 0	ACTS_6	1	0	54
ASSIGN 0	ACTS_7	1	0	55
ASSIGN 0	ACTS_8	1	0	56
ASSIGN 0	ACTS_9	1	0	57
ASSIGN 0	ACTS_10	1	0	16
ASSIGN 0	ACTS_11	1	0	17
ASSIGN 0	ACTS_12	1	0	18
ASSIGN 0	ACTS_13	1	0	19
ASSIGN 0	ACTS_14	1	0	20
ASSIGN 0	ACTS_15	1	0	21
ASSIGN 0	ACTS_16	1	0	22
ASSIGN 0	ACTS_17	1	0	23
ASSIGN 0	ACTS_18	1	0	24
ASSIGN 0	ACTS_19	1	0	25
ASSIGN 0	ACTS_20	1	0	32
ASSIGN 0	ACTS_30	1	0	33
ASSIGN 0	ACTS_40	1	0	34
ASSIGN 0	ACTS_50	1	0	35
ASSIGN 0	ACTS_60	1	0	36
ASSIGN 0	ACTS_70	1	0	37
ASSIGN 0	ACTS_80	1	0	38
ASSIGN 0	ACTS_90	1	0	39
ASSIGN 0	ACTS_DOLLAR	1	0	42
ASSIGN 0	ACTS_DOLLARS	1	0	43
ASSIGN 0	ACTS_AND	1	0	46
ASSIGN 0	ACTS_CENTS	1	0	45
ASSIGN 0	ACTS_MINUTE	1	0	9
ASSIGN 0	ACTS_MINUTES	1	0	10
ASSIGN 0	ACTS_ALERT	1	0	5
ASSIGN 0	ACTS_MORE	1	0	47
ASSIGN 0	ACTS_NICKEL	1	1	22
ASSIGN 0	ACTS_DIME	1	1	23
ASSIGN 0	ACTS_QUARTER	1	1	24

Sample DRAMREC Input (Part 2 of 2)

DRAMREC

DRAM	PHRASENAME	LENGTH	BLOCK	PHRASENO
ASSIGN 0	ACTS_PLEASE	1	1	8
ASSIGN 0	ACTS_PLS_DEPOSIT	1	1	9
ASSIGN 0	ACTS_FOR_FIRST	1	1	10
ASSIGN 0	ACTS_THANK_HAVE	1	1	11
ASSIGN 0	ACTS_CR_OVERTIME	1	1	12
ASSIGN 0	ACTS_THANK_YOU	1	1	13
ASSIGN 0	ACTS_END_SIGNAL	1	1	14
ASSIGN 0	ACTS_FOR_PAST	1	1	15
ASSIGN 0	ACTS_CHARGES_ARE	1	1	16
ASSIGN 0	ACTS_PLUS_TAX	1	1	17
ASSIGN 0	ACTS_HAS_ENDED	1	1	18
ASSIGN 0	ACTS_TST_ENDED	1	1	25
ASSIGN 0	ACTS_FOR_NEXT	1	1	26
ASSIGN 0	ACTS_YOU_HAVE	1	1	35
ASSIGN 0	ACTS_CREDIT	1	1	36
ASSIGN 0	ACTS_TST_DEPOSIT	1	1	37

Datafilling table DRMUSERS

Table DRMUSERS contains three changed phrases:

```
ACTSTOPS    11   ACTS_PLS_DEPOSIT  ACTS_1  ACTS_VAR_COIN $
ACTSTOPS    12   ACTS_PAUSE  ACTS_ALERT  $
ACTSTOPS    13   ACTS_THANK_YOU  ACTS_VAR_COIN  +
                 ACTS_TST_ENDED  $
```

Datafill example for table DRMUSERS

Sample datafill for table DRMUSERS appears in the following example.

Automatic Coin Toll Service (continued)

MAP example for table DRMUSERS

```
ACTSTOPS    1   ACTS_VAR_CHARGE ACTS_PLEASE ACTS_PAUSE +
                ACTS_PLS_DEPOSIT ACTS_VAR_CHARGE +
                ACTS_FOR_FIRST ACTS_VAR_PERIOD $
ACTSTOPS    2   ACTS_PLS_DEPOSIT ACTS_VAR_CHARGE $
ACTSTOPS    3   ACTS_PLS_DEPOSIT_ACTS_VAR_CHARGE$ACT_MORE $
ACTSTOPS    4   ACTS_THANK_YOU $
ACTSTOPS    5   ACTS_THANK_HAVE ACTS_VAR_CREDIT +
    ACTS_CR_OVERTIME $
ACTSTOPS    6   ACTS_ALERT ACTS_VAR_PERIOD ACTS_END_SIGNAL $
ACTSTOPS    7   ACTS_ALERT ACTS_VAR_CHARGE ACTS_PLEASE
    ACTS_PAUSE ACTS_PLS_DEPOSIT ACTS_VAR_CHARGE+
    ACTS_FOR_PAST  ACTS_VAR_PERIOD $
ACTSTOPS    8   ACTS_ALERT ACTS_VAR_CHARGE ACTS_PLEASE+
    ACTS_PAUSE ACTS_YOU_HAVE ACTS_VAR_CREDIT+
    ACTS_CREDIT ACTS_PLS_DEPOSIT+
    ACTS_VAR_CHARGE ACTS_MORE ACTS_FOR_PAST+
    ACTS_VAR_PERIOD $
ACTSTOPS    9   ACTS_ALERT ACTS_CHARGES_ARE ACTS_VAR_CHARGE
            ACTS_PLUS_TAX ACTS_VAR_PERIOD $
ACTSTOPS    10  ACTS_ALERT ACTS_VAR_PERIOD
    ACTS_HAS_ENDED $
ACTSTOP 11  ACTS_TST_DEPOSIT ACTS_VAR_COIN $
ACTSTOPS    12  ACTS_VAR_COIN $
ACTSTOPS    13  ACTS_TST_END
```

Datafilling table TOPSPARM

Add new parameter ACTS_DOLLAR_COINTEST. The following is a description of this parameter:

Datafilling table TOPSPARM

Field PARMNAME	Field PARMVAL	Explanation and action
ACTS_DOLLAR _COINTEST	Y or N	The ACTS dollar coin test. This parameter allows coin tests with dollars. Set this parameter to Y for phones that accept dollars. Set this parameter to N for phones that do not accept dollars. The default is N. If the test fails, the system generates a TOPS117 log. Refer to functionality ACTS, ENSV00102 for additional information on coin tests.

Datafill example for table TOPSPARM

Sample datafill for table TOPSPARM appears in the following example.

Automatic Coin Toll Service (end)

MAP example for table TOPSPARM

```
PARMNAME                                    PARMVAL
_______________________________________________________

ACTS_DOLLAR_COINTEST                         Y
```

Tools for verifying translations

The Automatic Coin Toll Service does not use tools for verifying translations.

SERVORD

The Automatic Coin Toll Service does not use SERVORD.

External RTRS Interface

Ordering codes

Functional group ordering code: ENSV0101

Functionality ordering code: ENSV0103

Release applicability

TOPS11 and up

External RTRS Interface was introduced in TOPS04.

Prerequisites

To operate, External RTRS Interface has the following prerequisites:

- Operator Services Basic, OSB00101, and table TOPSFTR parameter TOPS_ON_OFF_SWITCH = Y
- Table TOPSFTR parameter EXTERNAL_RATING = Y
- BAS Generic, BAS00003
- SPID Assignment, UNBN0101 and table TOPSFTR parameter UNBUNDLING_BRANDING_VIA_SPID = Y

Description

This functionality is provided by the following features:

Feature number	Feature name
AN1389	External Rater Interface TCAP Changes (TOPS04)
AN1457	TOPS Real-Time Rating Call Processing (TOPS04)
AN1504	TOPS Real-Time Rating TCAP Interface (TOPS04)
AN1505	TOPS Real-Time Rating Customer Datafill & SOC (TOPS04)
AN1506	TOPS Real-Time Rating XRate Tool (TOPS04)
AF7163	Unbundling: External Rater Protocol Changes (TOPS09)
AF7497	TOPS External Rating Enhancements (TOSP10)
59020353	TOPS External Rating ADACC Enhancement (TOPS14)

This functionality moves the real-time rating system from the TOPS switch to a separate computer system. Then, the external rater can perform real-time

External RTRS Interface (continued)

rating for multiple TOPS switches. This change makes administration easier and lower in cost than maintaining a separate rating system at each TOPS switch. The following figure shows a network view of the TOPS switch and the real-time rating system.

RTRS network configuration

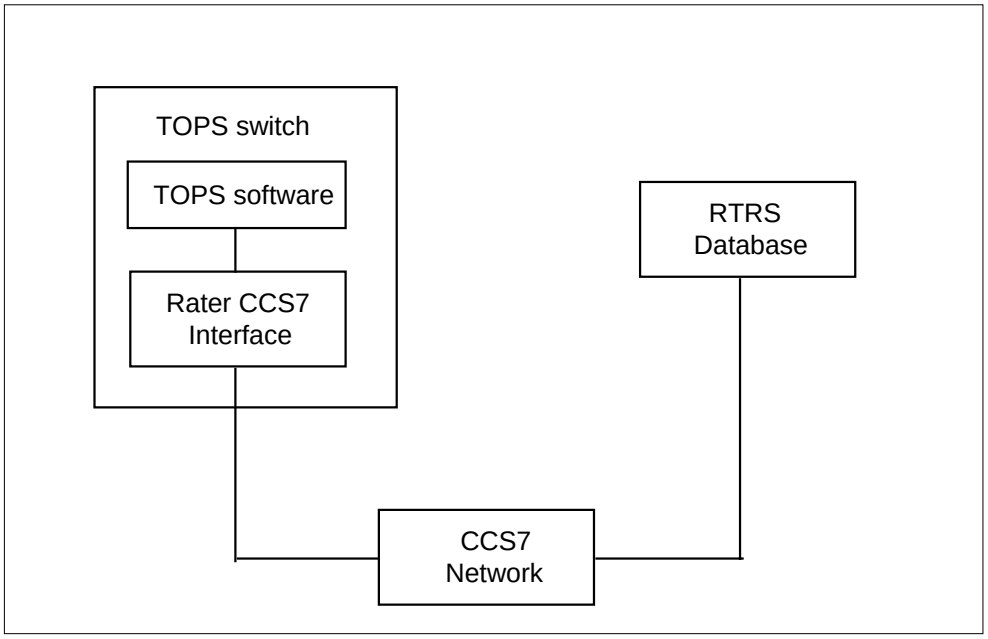

The releases of this functionality are the following:

- TOPS04 - Initial release
- TOPS09
  - — The calling account owner service provider identifier (AO SPID) is added to queries to the RTRS database. For information on SPIDs, refer to functionalities SPID Assignment (UNBN0101) and TOPS SPID Branding (UNBN0103).

    This change is a result of the recent Telecommunications Reform Act of 1996 (TRA96). Incumbent Local Exchange Carriers (ILEC) can

External RTRS Interface (continued)

resell Local Exchange Carrier (LEC) operator services to competing LEC (CLEC) providers. This process is referred to as unbundling.

The ILEC or CLEC is identified by two types of SPIDs:

– Account owner (AO) SPID: This value identifies the dialtone and local service provider.

– Billing service provider (BSP) SPID: This value identifies the service provider who collects and generates the bill to the subscriber.

The AO SPIDs can apply to the calling, called, billing, and requested numbers. The BSP SPIDs can apply to the calling, called, and billing numbers. The AO and BSP SPIDs can be different values. As mentioned above, only the calling AO SPID is used for this change.

— Limitations and restrictions section has subsection SPID.

— Interactions section has information under SPID.

— Table TOPSPARM parameter RTRS_VERSION is added. Refer to the datafill procedure section for details.

— XRATE CI tool parameter CLGAOSPID is added. Refer to section “Real-time rating tool XRATE" for details.

• TOPS10

— Functionality Estimated Call Charges, OSB00101, is now supported. Refer to section “Estimate of charges".

— Functionality Global TOPS Call Processing, GOS00101, is now supported. Refer to section “Open numbering plan".

— The XRATE tool command SRVMOD now supports parameter QUOTE. This parameter can be used to test the estimate of charge. Refer to the XRATE tool section.

— Table TOPSPARM parameter RTRS_VERSION may be automatically changed during a One Night Process (ONP). Refer to this parameter in the datafill procedure section.

— Limitations and restrictions section has new subsection “TOPS10 enhancements".

External RTRS Interface (continued)

- TOPS11
  - — TOPS externally rated hotel calls can generate AMA module code 60 (North America) or 36 (open numbering). Refer to “Hotel enhancements” in the Operation and Billing sections.

    No logs, operational measurements, or datafill are required or affected.
- TOPS14
  - — Table TOPSPARM new parameter RTRS_ADACC_DAS_ANN_QUERY allows an Automatic Directory Assistance Call Completion (ADACC) surcharge query to be skipped. This change is useful when the charges are fixed, so a query is not relevant. See the following sections:
    - – Operation - ADACC enhancement (TOPS14)
    - – Limitations and restrictions - ADACC enhancement (TOPS14)
    - – Billing - ADACC enhancement (TOPS14)
    - – Datafilling table TOPSPARM - parameter RTRS_ADACC_DAS_ANN_QUERY

Operation

The contents of this section are the following:

- Determining the rating system
- Simplification of rating procedures
  - — Rate step
  - — Initial, overtime, and recall periods
- External real-time rating TOPS call types and services
  - — Sent-paid coin, non-Automated Coin Telephone Service (ACTS) MTS
  - — Sent-paid coin, non-ACTS, DA service
  - — Sent-paid coin, operator handled DA call completion
  - — Sent-paid coin, non-ACTS, automated DA call completion
  - — Sent-paid hotel MTS
  - — Sent-paid hotel DA
  - — Sent-paid hotel, operator handled DA call completion
  - — Sent-paid hotel, automated DA call completion
  - — Automated Coin Telephone Service (ACTS) MTS calls
  - — ACTS DA calls

External RTRS Interface (continued)

  - — ACTS operator handled DA call completion
  - — ACTS automated DA call completion
  - — Calls requesting T&C service
  - — Estimate of charges (TOPS10)
  - — Open numbering plan (TOPS10)
  - — Hotel enhancements (TOPS11)
  - — ADACC enhancement (TOPS14)
- Operator actions resulting in rating of call
- TOPS-BP screen displays
- Query failure recovery procedures
- SCCP datafill
  - — SCCP datafill with GTT
  - — SCCP datafill without GTT
- TCAPTRID functionality replacement
- Operational measurements
- Real-time rating tool XRATE

Real-time rating is required when the charges for a TOPS call must be calculated while the call is in progress, or immediately following call conclusion. Prior to this functionality, the following TOPS call types received real-time rating:

- Calls billed to a coin phone: The charges must be collected as the call progresses.
- Calls billed to a hotel phone requiring a room or authorization number: The charges are reported to a device following call conclusion.
- Calls that requested Time and Charges (T&C) service: T&C is quoted to the billed party following call conclusion.

This functionality performs the following:

- Simplifies some of the rating procedures.
- Expands the number of TOPS call types that receive real-time rating.

External RTRS Interface (continued)

Determining the rating system

This functionality (TOPS RTRS) is optional via Software Optionality Control (SOC) with code ENSV0103. TOPS RTRS is delivered in the IDLE state and can be set to ON via the SOC utility.

When TOPS RTRS is in the IDLE state, all calls requiring real-time rating use internal rating regardless of datafill in table COMPCODE and TOPSPARM parameter RTRS_DEFAULT_SYSTEM. Also, the XRATE tool cannot be used.

When TOPS RTRS is in the ON state, determination of the rating system (external or internal) is by table COMPCODE. If information is not datafilled in Table COMPCODE, default information is obtained from parameter RTRS_DEFAULT_SYSTEM in table TOPSPARM.

Please refer to the *Software Optionality Control User's Manua*l, 297-8991-901, for instructions on using the SOC utility.

Simplification of rating procedures

The following rating procedures are simplified or unnecessary for external rating. Note that these procedures are not changed in the internal rating system that may be used if this functionality is not enabled by SOC or if indicated by tables COMPCODE and TOPSPARM.

Rate step

Calculation of the rate step, an intermediate value used in rate calculations, is not required for externally rated calls. Therefore, the rate step is not displayed to the operator and the operator is not able to enter a rate step. Also, the rate step does not appear on charge adjusted Hotel Billing Information Center (HOBIC) records.

Initial, overtime, and recall periods

Internal rating makes use of four time values when rating calls. These values are:

- *The initial period of the call:* This time interval is used for charging on sent-paid coin, hotel/motel, and T&C calls. For internal rating, the initial period is datafilled in field INP of Table CHARGE. On coin calls, the call is reconnected with an operator or automated announcement at the end of the initial period.
- *The overtime period of the call:* This time interval is also used for charging purposes on coin, hotel/motel, and T&C calls. When the total charge for a call is to be determined, the internal rating system calculates how many initial and overtime periods were consumed, and produces the charges. This period has no bearing on recalls to an operator or announcement; it is

External RTRS Interface (continued)

used only for charge calculation. For internal rating, the overtime period is datafilled in field OVTI of Table CHARGE.

- *The initial coin recall period of a coin call:* This is the amount of time a coin call should progress before recalling to the DMS to collect the coins in the coin phone's hopper. This period may or may not be equal to the initial period of the call. For internal rating, this period is datafilled in field CIRP of Table SCHED.
- *The coin recall period of a coin call:* This is the amount of time to wait before recalling to an operator or automated announcement, and collecting the coins deposited after the initial period. For internal rating, this period is datafilled in field CRP of Table SCHED.

External real-time rating TOPS call types and services

The following TOPS calls types require real-time rating. This list contains information about each call type, rating method, and screen displays.

Notes on the following call types:

- These are billable calls, as indicated by datafill. Rating is not performed on calls marked NoAMA, either by the operator or through datafill.
- Directory Assistance (DA) is an example of a service with no called party where the caller is connected to an operator for information.
- Message Telecommunication Service (MTS) is a voice grade connection between two end stations. Toll and Assist service (TA) is an example of MTS.
- Services are described as TA and DA. If the Queue Management System (QMS) is in use, and the QMS service is defined as a base service in Table TQMSSERV, the base service of TA or DA is used. If QMS custom services are in use, the rating query contains the enhanced service, and the RTRS must be aware of the QMS custom services. Furthermore, the QMS custom services must have the same value in table SERVNAME across all TOPS switches using a particular RTRS.
- A rating query failure can occur for several reasons:
  - — Automatic Code Gap (ACG): The RTRS instructed the DMS to slow the number of rating queries. This is implemented by instituting a temporary delay between rating queries. If an operator attempts to rate a call while this delay is in effect, the query is disallowed immediately. Although this is not considered a failure, the actions taken following ACG align with the other failure scenarios.
  - — Query timeout: The RTRS did not respond within a DMS specified time interval.

— Query encoding error: An error was detected while composing the query.

— Response decoding error: The response from the RTRS could not be interpreted.

— Subsystem failure: The query could not be sent because the RTRS subsystem is out of service.

- The TOPS Basic Purpose (TOPS-BP) position can provide DA service on sent-paid calls. This position is also known as a TOPS-MPX Release 1 or TOPS-MPX Auxiliary Operator Services System (AOSS) position. Its screen cannot display the charge amount; therefore, it is recommended that sent-paid coin calls be routed to other position types. Sent-paid hotel calls, however, can be billed using the TOPS-BP position, but table VROPT parameter DA_BP_HOTEL_ROOM_REQUIRED must be set to N, because the TOPS-BP operator cannot enter a room number. Therefore, sent-paid hotel DA calls can be rated and must have screen displays.
- The TOPS-BP position cannot provide TA service or DA call completion. If calls requesting these services are routed to TOPS-BP positions, they should be transferred to another call queue with multipurpose positions.

Sent-paid coin, non-Automated Coin Telephone Service (ACTS) MTS

Sent-paid coin calls consist of an initial period followed by zero or more overtime periods. The caller deposits money prior to the initial period. For overtime periods, the caller may deposit money prior to each overtime period (pre-paid), or following each overtime period (post-paid). The overtime payment method depends on switch datafill. The queries, however, are sent at the same call locations regardless of the overtime payment method. The default is post-paid. Pre-paid is an option provided by functionality Pre-paid Coin, OSB00101, and enabled by SOC.

Following are the processing steps:

- *Initial query:* Sent when the call is connected to the operator position, or after an operator entry that results in rating. Refer to section “Operator actions resulting in rating of call."
- *Initial response:* Contains the duration and charges for the initial period.
- *Screen displays:* Waiting icon while query is outstanding.
- *Initial query successful:* Waiting icon is erased. Time and charges for initial period are displayed. Operator ensures amount due is deposited by caller and releases the call.

External RTRS Interface (continued)

- *Initial query failure:* Waiting icon is erased. Query failure is displayed. Invalid charge amount indication is displayed. The operator may employ one or more of the following actions:
  - — Attempt to send the query again by using one of the actions described in Operator actions resulting in rating of call."
  - — Query the caller for alternate billing.
  - — Provide the service for free. Since no time interval was obtained, the call continues until the parties go onhook.
  - — Cancel the call.
- *Subsequent query:* Sent at end of initial period.
- *Subsequent response:* Contains duration and charges for upcoming period.
- *Screen displays:* None. The query is sent and the response is received before the operator is attached.
- *Subsequent query successful:* The call arrives at the operator position for collection of charges or only notification (in the case of post-pay overtime).
- *Subsequent query failure:* The call arrives at the operator with a query failure display and an invalid charge amount display. Billing cannot be changed mid-call, so the operator performs one or more of the following:
  - — Attempts to send the query again by using one of the actions described in section “Operator actions resulting in rating of call."
  - — Provides the service for free. Since no time interval was obtained, if the call is released for free, the call continues until the parties go onhook.
  - — Cancels the call.
- *End of call query:* Sent when a party goes onhook in the middle of an overtime period on a post-paid overtime call.
- *End of call response:* Contains the charges for the entire call. The DMS compares the charges to the amount already deposited by the calling party, and returns the call to the operator for collection of the amount owed.
- *Screen displays:* The charges due are displayed to the operator, along with the call time.
- *End of call query successful:* The call time and charges due are displayed to the operator.
- *End of call query failure:* The call arrives at the operator with a query failure display and an invalid charge amount display. The billing cannot be

changed at the end of the call so the operator can perform one or more of the following actions:

— Attempt to send the query again by using one of the actions described in “Operator actions resulting in rating of call."

— Provide the service for free. If the operator releases the call, it will end, and the caller will not have to pay for the previous overtime period.

Sent-paid coin, non-ACTS, DA service

The caller dials a DA service number from a coin phone and is connected to the operator.

Following are the processing steps:

- *Query:* Sent when the call is connected to the operator position, or after an operator entry that results in rating. Refer to “Operator actions resulting in rating of call."
- *Response:* Contains the charge for the DA service.
- *Screen displays:* Waiting icon while query is outstanding.
- *Query successful:* Waiting icon is erased. Charges for service are displayed. The operator ensures the amount due is deposited by caller. If audio response units (ARUs) are available, the operator releases the caller to an ARU, which quotes the announcement. If ARUs are not available, the operator verbally quotes the listing and keys DA Service which generates an automatic message accounting (AMA) record.
- *Query failure:* Waiting icon is erased. Query failure is displayed. Invalid charge amount indication is displayed. The operator may employ one or more of the following actions:

  — Attempt to send the query again by using one of the actions described in “Operator actions resulting in rating of call."

  — Query the caller for alternate billing.

  — Provide the service for free.

  — Cancel the call.
- *Multiple DA requests, verbal:* Each time the operator keys DA service, an AMA record is generated and a rating query is launched so the next DA request can be rated.
- *Multiple DA requests, ARU:* The caller remains offhook after the listing is announced by the ARU. If datafill allows, the call is reconnected to a DA operator. At this time a rating query is sent to calculate the charges for the next DA service.

External RTRS Interface (continued)

Sent-paid coin, operator handled DA call completion

The DA service is provided to the caller (verbally or by an ARU). The caller requests DA call completion from the operator. The operator keys for the TA service, causing a query to be sent to determine charges for the initial period of the TA portion of the call, plus any surcharge for DA call completion.

Following are the processing steps:

- *Query:* Sent as a result of keying TA service.
- *Response:* Contains the charge for the initial period of the coin call, plus the surcharge for the DA call completion service.
- *Screen displays:* Waiting icon while query is outstanding.
- *Query successful:* Waiting icon is erased, and the TA screen is displayed. The DACC surcharge is added to the initial period charge and displayed to the operator, who ensures the caller deposits this amount.
- *Query failure:* Waiting icon is erased. Query failure is displayed. The call transitions to the TA screen, and displays invalid charges. The operator has the following options:
  - — Attempt to send the query again by using one of the actions described in “Operator actions resulting in rating of call."
  - — Query the caller for alternate billing.
  - — Provide the two services, MTS and OHDACC, for free. Since no time interval was obtained, the call continues until the parties go onhook.
  - — Cancel the call.

Sent-paid coin, non-ACTS, automated DA call completion

The operator releases the call to the DA ARU. Prior to connection to the ARU, a rating query is sent to determine the surcharge for automated DA call completion (ADACC). This surcharge is forwarded to the DA system (DAS), which provides the caller with the option to complete the call for the surcharge. If the caller accepts, the call moves into the TA portion.

Following are the processing steps:

- *Query:* Sent as a result of the operator releasing the call to the ARU.
- *Response:* Contains the untaxed, unrounded surcharge for the DA call completion service.
- *Screen displays:* None; this query occurs after operator is released.
- *Query successful:* The surcharge is sent to the DAS, which offers call completion to the caller. If accepted, and the datafill is set up so that the sent-paid billing used for DA service is automatically used for TA service,

another query is sent for the initial period time and charges. The RTRS includes the DACC surcharge in this amount. The call is presented to the operator, who ensures the caller deposits the charge amount.

- *Query failure:* The action taken depends on the value of TOPSPARM parameter RTRS_ADACC_QUERY_FAIL_ACTION:
  - — BLOCK: The caller hears the ARU announcement, but DACC is not offered.
  - — OPER: The caller hears the announcement, and then the call is connected to an operator position with a query failure display. The invalid charges display appears as well. The call is in the DA billing screen, and the operator must attempt operator handled DA call completion.
  - — FREE: The DMS indicates to the DAS that there is no surcharge. The DAS offers call completion for free. If call completion is accepted, and the datafill is set up so that the sent-paid billing used for the DA service is automatically used for TA service, another query is sent for the initial period time and charges. The RTRS does not include the DACC surcharge in this amount. The call is presented to the operator, who ensures the caller deposits the charge amount.

Sent-paid hotel MTS

The caller dials a sent-paid call from a hotel, and the operator enters a room number. The called party is connected and conversation proceeds. When both parties go onhook, a rating query is sent.

Following are the processing steps:

- *Query:* Sent as a result of the parties going onhook at the end of the call.
- *Response:* Contains the time and charges for the hotel call.
- *Screen displays:* None. The only operator involvement is to collect the room number prior to connecting the call. This can also be accomplished using Automatic Room Authorization Number (ARAN).
- *Query successful:* The time and charges for the call are output on the appropriate hotel billing device.
- *Query failure:* The invalid charge (99999) is output on the hotel billing device.

Sent-paid hotel DA

The caller dials a DA service number from a hotel phone, and is connected to the operator. Usually, the operator must enter a room number before releasing to announcement. The room number, however, does not impact rating.

External RTRS Interface (continued)

Following are the processing steps:

- *Query:* Sent when the call is connected to the operator position, or after the operator performs an action which results in rating. Refer to “Operator actions resulting in rating of call."
- *Response:* Contains the charge for the DA service.
- *Screen displays:* Waiting icon while query is outstanding.
- *Query successful:* Waiting icon is erased. No charges are displayed, because this is a hotel call and the caller cannot deposit any money. If ARUs are available, the operator releases the caller to an ARU, which quotes the announcement. If ARUs are not available, the operator verbally quotes the listing and keys DA Service which generates an AMA record. In both cases, a charge record is output on the appropriate hotel billing device.
- *Query failure:* Waiting icon is erased. Query failure is displayed. The operator may employ one or more of the following actions:
  - — Attempt to send the query again by using one of the actions described in “Operator actions resulting in rating of call."
  - — Query the caller for alternate billing.
  - — Provide the service for free by releasing the caller to the announcement, or verbally quoting the listing and generating the AMA record. The invalid charge (99999) is output on the hotel billing device.
  - — Cancel the call.
- *Multiple DA requests, verbal:* Each time the operator keys DA service, an AMA record is generated, and a rating query is launched so the next DA request can be rated.
- *Multiple DA requests, ARU:* The caller remains offhook after the listing is announced by the ARU. If datafill allows, the call is reconnected to a DA operator who keys DA service, which generates an AMA record and launches a rating query so the next request can be rated.
- *TOPS-BP Screen Displays:* This call type can be handled by a TOPS-BP position. It does not have any coin displays so datafill should not route coin traffic to TOPS-BP positions. Hotel calls can be handled by TOPS-BP positions, but the room number cannot be entered. Therefore, parameter DA_BP_HOTEL_ROOM_REQUIRED in table VROPT must be set to N.

Sent-paid hotel, operator handled DA call completion

The DA service is provided to the caller (verbally or by an ARU). The caller requests DA call completion from the operator. The operator keys for the TA

service and releases the call. When the parties go onhook, a query is sent to for the TA charges and the DACC surcharge.

Following are the processing steps:

- *Query:* Sent at the end of the hotel TA call.
- *Response:* Contains the charges for the TA portion of the call, including the surcharge for the DA call completion service.
- *Screen displays:* None; this query occurs at the end of the call, and no operator is attached.
- *Query successful:* A hotel billing record is generated, containing the TA charge plus the DACC surcharge.
- *Query failure:* The hotel billing record contains invalid charges.
- *TOPS-BP Screen Displays:* None; this query occurs at the end of the call, and no operator is attached.

Sent-paid hotel, automated DA call completion

The operator releases the call to the DA ARU. Prior to connection to the ARU, a rating query is sent to determine the surcharge for automated DA call completion (ADACC). This surcharge is forwarded to the DA system (DAS), which provides the caller with the option to complete the call for the surcharge. If the caller accepts the call moves into the TA portion.

Following are the processing steps:

- *Query:* Sent as a result of the operator releasing the call to the ARU.
- *Response:* Contains the untaxed, unrounded surcharge for the DA call completion service.
- *Screen displays:* None. This query occurs after the operator is released.
- *Query successful:* The surcharge is sent to the DAS. Later, when the MTS portion of the call is rated, the RTRS adds the ADACC surcharge to the charge for the MTS portion.
- *Query failure:* The action taken depends on the value of TOPSPARM parameter RTRS_ADACC_QUERY_FAIL_ACTION:
  - — BLOCK: The caller hears the ARU announcement, but DACC is not offered.
  - — OPER: The caller hears the announcement, and then the call is connected to an operator position with a query failure display. The call

External RTRS Interface (continued)

is in a DA billing screen, and the operator must attempt operator handled DA call completion.

— FREE: The call proceeds to the TA portion. At the end of the call, the DMS queries the charges, without indicating to the rater that DACC was provided. Therefore the response from the rater does not include a DACC surcharge.

- *TOPS-BP Screen Displays:* The ADACC query takes place after the operator is released. If the query fails, the TOPSPARM parameter mentioned above is set to OPER, and the call recalls to a TOPS-BP operator, then query failure is displayed. The TOPS-BP operator cannot perform DACC and must transfer the call to another queue.

Automated Coin Telephone Service (ACTS) MTS calls

Sent-paid coin calls consist of an initial period followed by zero or more overtime periods. The caller deposits money prior to the initial period. For overtime periods, the caller may deposit money prior to each overtime period (pre-paid), or following each overtime period (post-paid). The overtime payment method depends on switch datafill. The queries, however, are sent at the same call locations regardless of the overtime payment method. The default is post-paid. Pre-paid is an option provided by functionality Pre-paid Coin, OSB00101, and enabled by SOC.

Following are the processing steps:

- *Initial query:* Sent during call setup. ACTS call are always sent-paid
- *Initial response:* Contains the duration and charges for the initial period.
- *Screen displays:* None, this is an automated call.
- *Initial query successful:* The ACTS system uses automated announcements and Coin Detection Circuits (CDCs) to collect the charges.
- *Initial query failure:* The action taken depends on the value of TOPSPARM parameter RTRS_FIRST_MTS_COIN_QRYFL_ACTION:

  — BLOCK: The call is taken down.

  — OPER: The call is sent to an operator and the call arrives at position with a query failure indication and invalid charges. The operator has the same options as listed in the initial query failure section of “Sent-paid coin, non-Automated Coin Telephone Service (ACTS) MTS."

  — FREE: ACTS connects the parties and releases the call. Since no time interval was obtained, the call continues until the parties go onhook.

- *Subsequent query:* Sent at the end of the initial period.

- *Subsequent response:* Contains duration and charges for the upcoming period.
- *Screen displays:* None. This is an automated call.
- *Subsequent query successful:* The ACTS system collects coins or notifies the caller (for postpay overtime).
- *Subsequent query failure:* The action taken depends on the value of TOPSPARM parameter RTRS_SUBSE_MTS_COIN_QRYFL_ACTION:
  - — OPER: The call ID is sent to an operator and the call arrives at position with a query failure indication and invalid charges. The operator has the same options as listed in the subsequent query failure section of “Sent-paid coin, non-Automated Coin Telephone Service (ACTS) MTS."
  - — FREE: ACTS connects the parties and releases the call. Since no time interval was obtained, the call continues until the parties go onhook.
- *End of call query:* Sent when a party goes onhook in the middle of an overtime period on a post-paid overtime call.
- *End of call response:* Contains the charges for the entire call. The DMS compares the charges to the amount already deposited by the calling party, and returns the call to the ACTS system for collection of the amount owed.
- *Screen displays:* None, the coin collection is handled by the ACTS system.
- *End of call query successful:* The call time and charges due are quoted to the calling party.
- *End of call query failure:* The call arrives at the operator with a query failure display and an invalid charge amount display. The billing cannot be changed at the end of the call so the operator can perform one or more of the following actions:
  - — Attempt to send the query again by using one of the actions described in section “Operator actions resulting in rating of call."
  - — Provide the service for free. If the operator releases the call, it will end, and the caller will not have to pay for the previous overtime period.

ACTS DA calls

The caller dials a DA service number and is connected to ACTS. ACTS collects the charge and connects the caller to the operator for DA service.

Following are the processing steps:

- *Query:* Sent during call setup. ACTS calls are always sent-paid.
- *Response:* Contains the charges for the service.

External RTRS Interface (continued)

- *Screen displays:* None. This is an automated call.
- *Query successful:* The ACTS system ensures that the appropriate amount is deposited and connects the DA operator.
- *Query failure:* The call is transferred to the operator with the query failure display and invalid charges indicated. The operator may attempt to send the query again by class charging the call as sent-paid. The operator may query the caller for alternate billing. The operator may provide the service for free.

ACTS operator handled DA call completion

This scenario is the same as “Sent-paid coin, operator handled DA call completion" with the exception that subsequent period queries of the TA portion are handled by ACTS instead of an operator. In operator handled DA call completion, the operator handles the billing for the initial period of the TA portion of the sent-paid coin call.

ACTS automated DA call completion

The operator releases the call to the DA ARU. Prior to connection to the ARU, a rating query is sent to determine the surcharge for automated DA call completion (ADACC). This surcharge is forwarded to the DA system (DAS), which provides the caller with the option to complete the call for the surcharge. If the caller accepts, the call moves into the TA portion.

Following are the processing steps:

- *Query:* Sent as a result of the operator releasing the call to the ARU.
- *Response:* Contains the untaxed, unrounded surcharge for the DA call completion service.
- *Screen displays:* None. This query occurs after operator is released.
- *Query successful:* The surcharge is sent to the DAS, which offers call completion to the caller. If accepted, and the datafill is set up so that the sent-paid billing used for the DA service is automatically used for TA service, another query is sent for the initial period time and charges. The RTRS includes the DACC surcharge in this amount. The ACTS system ensures the caller deposits the charge amount.
- *Query failure:* The action taken depends on the value of TOPSPARM parameter RTRS_ADACC_QUERY_FAIL_ACTION:
  - — BLOCK: The caller hears the ARU announcement, but DACC is not offered.
  - — OPER: The caller hears the announcement and then the call connects to an operator position with a query failure display. The invalid charges

display appears as well. The call is in the DA billing screen and the operator must attempt operator handled DA call completion.

— FREE: The DMS indicates to the DAS that there is no surcharge. The DAS offers call completion for free. If call completion is accepted, and the datafill is set up so that the sent-paid billing used for the DA service is automatically used for TA service, another query is sent to for the initial period time and charges. The RTRS does not include the DACC surcharge in this amount. The ACTS system ensures the caller deposits the charge amount.

Calls requesting T&C service

An MTS call billed in any manner may provide time and charges (T&C), if requested by the calling or called party. The call must go to the operator to request T&C. Note, TOPS call origination types 1155 and 1156 automatically mark the call as requiring T&C. The call proceeds to conclusion, and then a rating query is sent to determine T&C.

Following are the processing steps:

- *Query:* Sent at the conclusion of the call.
- *Response:* Contains the time and charges for the MTS service.
- *Screen displays:* None. The query occurs at the end of the call.
- *Query successful:* The time and charges are quoted to the calling or called party. The quote is from either recorded announcements or an operator. The time and charges can be sent to an output device if the billed party did not remain on-line to hear the charges.
- *Query failure:* The call is taken down and T&C is not provided. If T&C are to be sent to an output device and the query failed, the invalid charges (99999) are output on the device.

Estimate of charges (TOPS10)

Release TOPS07 functionality Estimated Call Charges, OSB00101, is supported by external RTRS in release TOPS10.

Estimated Call Charges allows an operator to quote charges for a call to a subscriber, given the call attributes defined by the subscriber. External RTRS Interface uses the external database to perform the charge calculations rather than the tables internal to the DMS switch.

External and internal rating operate the same except for the call duration. Internal rating does not require the duration, although it can be specified. If duration is not given for internal rating, the display shows the initial and

External RTRS Interface (continued)

overtime values and charges are displayed. For external rating, an operator message requests the duration before the query can be sent.

An estimate is performed by the external rating database when either external rating has been enabled for the entire office or if is selected for external rating by table COMPCODE.

For further information on the Estimated Call Charges, refer the functionality (OSB00101) description. For billing, Module Code 611 is appended for an estimate of charges.

It is possible for an external database to send a surcharge for an estimate query. This surcharge is not supported at this time. Charges for the Estimate of Charges service are currently handled by AMA downstream processing. Module code 611 contains only a context identifier and digits string field.

SOC option OSB00101 (Estimated Call Charges) must be ON for this capability to operate.

Open numbering plan (TOPS10)

Functionality Global TOPS Call Processing, GOS00001, is supported in release TOPS10.

Before release TOPS10, external rating was applicable only to the North American numbering plan. Release TOPS10 allows open numbering plan (global) calls to be rated by an external database, rather than tables internal to the DMS switch.

> ***Note:*** Not all automated operator systems are supported in an Open numbering system. For a complete list of automated systems supported in an Open numbering system refer to functionality Global TOPS Call Processing, GOS00001.

Table TOPSPARM parameter RTRS_DEFAULT_SYSTEM selects INTERNAL or EXTERNAL rating on an officewide basis for calls on trunks that do not have an entry in table COMPCODE. The index into table COMPCODE can be set for external rating of all calls on the incoming trunk, or NPA-NXX combinations. Because the open numbering plan does not use an NPA-NXX format, the index would typically specify all calls on the incoming trunk to be externally rated.

Another area of special consideration for Open numbering is table C7GTT. The key for table C7GTT consists of a GTTNAME and a vector of digits. Care must be used in selecting the digits when using Open numbering. The ability of Open numbering systems to route calls of varying digit lengths have to be

taken into consideration when deciding what digits to enter into table C7GTT as the routing index. The digit selection requires consideration of minimum digit lengths that may be used on calls entering the office.

Hotel enhancements (TOPS 11)

For release TOPS11, TOPS switch externally rated hotel calls can generate AMA module code 60 (North America) or 36 (open numbering).

Before this release, the same capability was used for internally rated hotel calls. But, externally rated hotel calls did not append AMA module code 60 or 36. The external rater query only provided information that was sent to the hotel device. AMA was generated before the query. Therefore, the charge data returned by the database was not included in the AMA information.

ADACC enhancement (TOPS14)

During an externally rated call that uses ADACC, the TOPS switch sends a query to the external real-time rating system to determine the ADACC only surcharges. This surcharge is then sent to the Directory Assistance System (DAS), which plays an announcement offering ADACC for the specified charges.

In certain Operating Companies, all ADACC calls have the same surcharge. The charges are not announced, a static announcement is given, or the charges are hardcoded in the Directory Assistance System (DAS), so the charges are not based on the result of a query.

This feature allows the query to be turned off. Therefore, this feature should not be used if ADACC surcharges can vary or ADACC announcements are not hardcoded.

Control of this query is performed by table TOPSPARM new parameter RTRS_ADACC_DAS_ANN_QUERY. For further information on this parameter, refer to the datafill procedure section, table TOPSPARM.

The default state of the parameter enables an ADACC surcharge query. Additional background information is provided in the Real-Time Rating System (RTRS) protocol (NIS Q234-1).

External RTRS Interface (continued)

Example scenarios: To understand the functionality of this activity, it is best to provide an example call scenario of an ADACC call which is externally rated. The ADACC call scenario is as follows:

1. The caller dials a directory assistance (DA) service access number (such as 411) from a station, coin, hotel phone and is connected to a DA operator.
2. A query is sent to determine the charges for the DA service.
3. The operator selects a listing and releases the call to the announcement.
4. A query is sent to determine the untaxed, un-rounded ADACC surcharge.
5. The surcharge is sent to the directory assistance system which plays an announcement based on the charge and offers ADACC.
6. The caller accepts the DAS offer of call completion
7. The TOPS switch sets up the rest of the call. Since ADACC was provided, a rating query is sent with a Service Indicator of “MTS with ADACC”. If this is a hotel call, the query is not sent until the end of the call. This step is not performed for a station line.

For informational purposes, an operator handled (OH) DACC call scenario is presented. Note the functionality provided by this activity does not affect operator handled DACC calls.

1. The caller dials a directory assistance (DA) service access number (such as 411) from a station, coin or hotel phone and is connected to a DA operator.
2. A query is sent to determine the charges for the DA service
3. The operator selects the listing and verbally quotes the listing, or releases the call to an announcement.
4. The caller stays on the line following the announcement and is reconnected to the operator if necessary. The caller requests DACC.
5. The operator keys “TA service”.
6. The TOPS switch sets up the rest of the call. Since OHDACC was provided, a rating query is sent with a Service Indicator of “MTS with OHDACC”. If this call is a hotel call, the query is not sent until the end of the call. This step is not performed for a station line.

Please refer to the Nortel Networks Real Time Rating System Protocol (NIS Q234-1) document for further information and explanation of the above call scenarios.

External RTRS Interface (continued)

A side by side comparison of the values of the parameter are shown below. The shaded sections indicate what behavior is changed when this feature is activated.

Parameter discussion

Default Functionality (query on)	(query off)
RTRS_ADACC_DAS_ANN_QUERY = Y	**RTRS_ADACC_DAS_ANN_QUERY = N**
The caller dials a directory assistance (DA) service access number (such as 411) from a coin, station, or hotel phone and is connected to a DA operator.	The caller dials a directory assistance (DA) service access number (such as 411) from a coin, station, or hotel phone and is connected to a DA operator.
A query is sent to determine the charges for the DA service.	A query is sent to determine the charges for the DA service.
The operator selects a listing and releases the call to the announcement.	The operator selects a listing and releases the call to the announcement.
A query is sent to determine the untaxed, un-rounded, ADACC surcharge.	No query is sent
The surcharge is sent to the directory assistance system which plays an announcement based on the charge and offers ADACC.	The standard message is sent to the DAS except the ADACC surcharge is hardcoded to zero. The DAS ignores this value and plays its hardcoded ADACC offering announcement.
The caller accepts the DAS offer of call completion.	The caller accepts the DAS offer of call completion.
The TOPS switch sets up the rest of the call. Since ADACC was provided, a rating query is sent with a Service Indicator of “MTS with ADACC”. If this call is a hotel call, the query is not sent until the end of the call. This step is not performed when dealing with a station line.	The TOPS switch sets up the rest of the call. Since ADACC was provided, a rating query is sent with a Service Indicator of “MTS with ADACC”. If call this is a hotel call, the query is not sent until the end of the call. This step does not occur when dealing with a station line.

Operator actions resulting in rating of call

The following operator actions cause a call at the operator position to launch a rating query, if enough rating information is present. If the call has already been rated, the operator action may have changed the data used to rate the call, requiring another query to rate the call again.

- Input or change the calling or called number
- Class charge an MTS or DA coin call as sent-paid

External RTRS Interface (continued)

- Class charge a DA hotel call as sent-paid
- Mark a sent-paid MTS or DA call as coin
- Mark a sent-paid DA call as hotel
- Service switch (coin or hotel)
- Generate AMA (coin or hotel)
- Input a new interLATA carrier number on an MTS coin call
- Enable or disable “dial rate" on a coin MTS or DA call, or a hotel DA call. Dial rate is a function which rates the operator handled call as if it was direct dialed.
- Release a DA call to announcement when ADACC is possible.
- Block or unblock calling number on an MTS coin call

TOPS-BP screen displays

The TOPS-BP position can handle sent-paid DA traffic. It does not have any coin displays, so datafill should not route coin traffic to TOPS-BP positions. Hotel calls can be handled by TOPS-BP positions, but the room number cannot be entered. Therefore, parameter DA_BP_HOTEL_ROOM_REQUIRED in Table VROPT must be set to N.

Query failure recovery procedures

If a query to the RTRS fails, the following recovery options are available:

Coin call (pre or post pay overtime)

First Query: Rate for initial coin query could not be obtained from the external rater. This is controlled by table TOPSPARM RTRS_FIRST_MTS_COIN_QRYFL_ACTION:

- Block the call (if at ACTS)
- Transfer to an operator (if at ACTS)
- Perform call for free (if at ACTS)

Subsequent Query: Rate for a non-initial query could not be obtained from the external rater. This is controlled by table TOPSPARM RTRS_SUBSE_MTS_COIN_QRYFL_ACTION:

- Transfer to an operator (if at ACTS)
- Perform call for free (if at ACTS)

If not at ACTS, then the call is at an operator. The operator is notified of the rate failure and determines the course of action.

External RTRS Interface (continued)

Directory Assistance

This takes place from a coin or hotel phone.

Coin phone:

- If at ACTS, the call is transferred to an operator.
- If not at ACTS, the call is at an operator so they determine the course of action.

Hotel phone: The call is at an operator so they determine the course of action.

Automated Directory Assistance Call Completion

This takes place from a coin or hotel phone. This is controlled by table TOPSPARM RTRS_ADACC_QUERY_FAIL_ACTION:

- Block the call completion service
- Transfer to an operator
- Perform the ADACC portion for free

Operator Handled Directory Assistance Call Completion

This takes place from a coin or hotel phone. The call is already at an operator so they determine the course of action.

Time and Charges (T&C)

This can originate from any phone. In case of an external rater failure, T&C are not offered at the end of the call.

Others

Table TOPSPARM provides the following additional recovery options:

- RTRS_TIMEOUT: Indicates the time out period for a query to the external rater.
- RTRS_DEFAULT_COMPANY_CODE: A company code to be used if none is supplied by table COMPCODE.
- RTRS_DEFAULT_SYSTEM: This selects internal or external rating if it cannot be determined from table COMPCODE.

SCCP datafill

The SCCP routing tables are used to route RTRS queries over the CCS7 network. These tables (C7RPLSSN, C7LOCSSN, C7GTTYPE, and C7GTT) are modified to allow entry of RTRS as a valid subsystem name. Also, RTRSGT is added as a valid translation name.

External RTRS Interface (continued)

These tables can be datafilled to route RTRS queries using GTT or without using GTT as shown in the following datafill examples.

SCCP datafill with GTT

Following is datafill for routing an RTRS query using GTT.

MAP display example for table C7NETSSN

```
PCNAME      SSNAMES
----------------------------------------------------------
RTESET1     (RTRS 197)$
```

MAP display example for table C7LOCSSN

```
SSNAME  SSNUMBER  MININST  REPLINFO  TFMI  PCNAMES
----------------------------------------------------------
 RTRS     197       1         N      N       $
```

MAP display example for table C7GTTYPE

```
GTTNAME  GTTYPE        GTTID
----------------------------------------------------------
RTRSGT   ANSI7 11     (RTRSGT)
```

MAP display example for table C7GTT

```
GTTKEY      GTTRSLT
----------------------------------------------------------
RTRSGT 0 9  PCONLY  (RTESET1 0) $  GT
```

SCCP datafill without GTT

Following is datafill for routing an RTRS query without using GTT.

MAP display example for table C7NETSSN

```
PCNAME      SSNAMES
----------------------------------------------------------
RTESET1     (RTRS 197)$
```

External RTRS Interface (continued)

MAP display example for table C7LOCSSN

```
SSNAME  SSNUMBER  MININST  REPLINFO  TFMI  PCNAMES
-------------------------------------------------------
 RTRS     197       1         N      N       $
```

MAP display example for table C7GTTYPE

```
GTTNAME  GTTYPE        GTTID
-------------------------------------------------------
RTRSGT   ANSI7 11     (RTRSGT)
```

MAP display example for table C7GTT

```
GTTKEY      GTTRSLT
-------------------------------------------------------
RTRSGT 0 9  PCSSN  (RTESET1 RTRS 0) $  SSN
```

TCAPTRID functionality replacement

With the TCAPTRID Replacement functionality (TOPS07), the Transaction Identifier (TRID) interface is replaced by the Identifier Pool (IDPL) interface. A TRID is used in each Transaction Capabilities Application Part (TCAP) query to a database. A TCAP query is used by the External Real-Time Rating System (RTRS) and Originating Line Number Screening (OLNS).

Before this functionality, TRID usage was calculated and allocated in table TCAPTRID. Now, IDPL usage is automatic, so no calculation or datafill allocation is required. Therefore, prior datafill in table TCAPTRID can be removed for functionalities External RTRS Interface (ENSV0103) and TOPS OLNS Interface (ABS00101). It is recommended to remove this datafill to avoid unnecessary memory allocation of extension blocks.

Operational measurements

OM groups RTRSCCP and RTRTCAP are added to measure RTRS SCCP and TCAP statistics, respectively.

OM group RTRSCCP contains registers which are pegged as follows:

- RTRNOXLA - No translation of such nature
- RTRNOXLS - No translation for this specific address
- RTRSUBCG - Subsystem Congestion

External RTRS Interface (continued)

- RTRSUBFL - Subsystem Failure
- RTRUNEQ - Unequipped User
- RTRNETFL - Network Failure
- RTRNETCG - Network Congestion
- RTRMISCE - Condition other than the previous seven listed

OM group RTRTCAP contains the following registers. Note, none of these registers are pegged for the XRATE tool queries.

- QWPSNT - Pegged when a RTRS Query With Permission package is successfully handed off to CCS7 software for transmission to an SCP.
- QWPSNT2 - Overflow register for QWPSNT.
- RESPRCV - Pegged when a RTRS Response Package is received from an SCP.
- RESPRCV2 - Overflow register for RESPRCV.
- ABORTSNT - Pegged when a RTRS Abort package is successfully handed off to CCS7 software for transmission to an SCP.
- ABORTRCV - Pegged when a RTRS Abort package is received from an SCP.
- UNIDSNT - Pegged when a RTRS Unidirectional package is successfully handed off to CCS7 software for transmission to an SCP.
- INVKSNT - Pegged when a RTRS Invoke (Last) component is successfully handed off to CCS7 software for transmission to an SCP.
- INVKSNT2 - Overflow register for INVKSNT.
- INVKRCV - Pegged when a RTRS Invoke (Last) component is received from an SCP.
- RTRNRES - Pegged when a RTRS Return Result (Last) component is received from the SCP.
- RTRNRES2 - Overflow register for RTRNRES.
- RTERRSNT - Pegged when a RTRS Return Error component is successfully handed off to CCS7 software for transmission to an SCP.
- RTERRRCV - Pegged when a RTRS Return Error component is received from an SCP.
- REJSNT - Pegged when a RTRS Reject component is successfully handed off to CCS7 software for transmission to an SCP.
- REJRCV - Pegged when a RTRS Reject component is received from an SCP.

- NOTRID - Pegged when a request for a Transaction ID fails.
- PKGTMOUT - Pegged when a time-out occurs on a RTRS query sent to an SCP.

Real-time rating tool XRATE

The XRATE (eXternal RATEr) tool allows testing of the real-time rating system. Queries can be generated and sent, causing a pass/fail response message. The XRATE tool is entered by the following command at the CI level of a Maintenance and Administration Position (MAP):

```
CI:
> XRATE <cr>
```

If the SOC state for this functionality is not ON, the XRATE tool cannot be entered and the following error message is displayed:

```
CI:
> XRATE <cr>
THE SOC STATE OF OPTION ENSV0103 MUST
BE ON TO ENTER THE XRATE INCREMENT
>SELECT OPTION ENSV0009
GROUP:ENSV
OPTION   NAME         RTU STATE USAGE LIMIT UNITS LAST_CHG
-------------------------------------------------------------
ENSV0103 External    N   IDLE   -    -      -   96/08/16
RTRS Intrfce
```

The XRATE CI increment contains all the commands for creating and sending an external rating query that can be used for testing purposes. Following is the sequence for testing a query:

1. Set up the query parameters using the query parameter commands and/or the SELQUERY control command.
2. Launch the query using command CALCCHG. This results in a pass or fail message.

External RTRS Interface (continued)

Following are the control commands. Note, the query parameter commands are listed separately after the control commands.

XRATE control commands

Command	Description

CALCCHG	Calculate calling charges. After the query parameters are set up, this command is used to launch the query. Then, a pass/fail message is returned. Following are sample commands and responses:
	
	Query success: Following is a successful query response. Time interval and Automatic Code Gapping (ACG) data are optional, so are not always present. If ACG data is returned, ACG controls are initiated. ACG reduces the number of rating queries when the RTRS becomes overloaded.
	
	`>calcchg`
	`XRATE sent rating query. Waiting for response...`
	`elapsed time = 0.6 secs`
	`DURATION SENSITIVE CHARGE = 70 default`
	`TIME INTERVAL = 1:00.00`
	`acg data:`
	`ACG DURATION = XXX SECS  ACG GAP = 0.50 SECS`
	
	RTRS detects error. In the following example, the RTRS detected an error in the received query message. Optional time interval and ACG data are returned, but are not always returned. If ACG data is returned, ACG controls are initiated.
	
	`>calcchg`
	`XRATE sent rating query. Waiting for response...`
	`elapsed time = 2.0 secs`
	`QUERY FAILURE - ERROR IN XRATE QUERY`
	`TIME INTERVAL = 1:00.00`
	`acg data:`
	`ACG DURATION = 489 SECS ACG GAP = 9.00 SECS`
	
	Action: Check if RTRS has the necessary data for calculating charges.
	
	Error in RTRS response: In the following example, TOPS detected an error in the RTRS query response. All rating and ACG data are ignored. A severe error generates a TCAP log.
	
	`>calcchg`
	`XRATE sent rating query. Waiting for response...`
	`elapsed time = 0.7 secs`
	`QUERY FAILURE - ERROR IN RTRS RESPONSE`
	
	Action: Check for software or hardware problems on the RTRS.

External RTRS Interface (continued)

XRATE control commands

Command	Description

	Timeout waiting for query response: In the following example, the XRATE tool timed-out waiting for a response to a rating query. The time-out period is set via the TIMEOUT command.
	
	`>calcchg`
	`XRATE sent rating query. Waiting for response...`
	`elapsed time = 30.0 secs`
	`QUERY FAILURE - RTRS RESPONSE TIME OUT`
	
	Action: Check for problems on the RTRS.
	
	Query returned: In the following example, the rating query was returned before reaching the RTRS. This is usually caused by a network routing failure.
	
	`>calcchg`
	`XRATE sent rating query. Waiting for response...`
	`elapsed time = 0.47 secs`
	`QUERY FAILURE - RETURNED TO SENDER`
	
	Action: Check CCS7 network datafill and connections.
	
	Query blocked by ACG: In the following example, ACG controls are active and the gap period specified by the controls has not elapsed since the last rating query was sent to the RTRS. Therefore, the query was never sent from the DMS.
	
	`>calcchg`
	`XRATE sent rating query. Waiting for response...`
	`QUERY FAILURE - QUERY BLOCKED BY ACG CONTROLS`
	`acg data:`
	`ACG DURATION = 512 SECS  ACG GAP = 10.00 SECS`
	
	Action: Wait until the ACG gap period has expired before making a query or wait until ACG duration has expired.
	
	Query blocked by TOPS: In the following example, TOPS did not send the query because it detected an error or inconsistency in the query data. Therefore, the query was never sent from the DMS.
	
	`>calcchg`
	`XRATE sent rating query. Waiting for response...`
	`QUERY FAILURE - QUERY BLOCKED BY TOPS ERROR CHECKS`
	`NO TRANSACTION IDS ARE AVAILABLE`
	
	Action: Check and revise the XRATE parameters.

External RTRS Interface (continued)

XRATE control commands

Command	Description
HELP <command>	Help. This command describes the other commands. The following is a sample response: `>HELP CLGAOSPID` `Display or update clgaospid information.` `Alphanumeric format supporting digits 0-9 and uppercase alphas A-Z only. Select NIL to clear current CLGAOSPID parameter value. (eg. clgaospid `1234', clgaospid `1234', clgaospid `AB1D', clgaospid NIL)` `Parms: [<clgaospid> STRING]`

QACG	Query Automatic Code Gapping (ACG). This command queries the ACG status. ACG reduces the number of rating queries when the RTRS becomes overloaded. The response indicates if ACG controls are initiated. And if initiated, the response indicates duration controls are in effect and gap between queries necessary while controls are in effect. Following is a sample response:
	
	`>QACG`
	`AUTOMATIC CODE GAPPING IS ACTIVE`
	`ACG DURATION = 57 SECS`
	`ACG GAP = 5.87 SECS`
	`ACG DURATION EXPIRES IN 12 SECONDS`
	
	`>QACG`
	`AUTOMATIC CODE GAPPING IS NOT ACTIVE`

QUIT	Quit. This command exits the XRATE CI increment. Following is the response:
	
	`>QUIT`
	`CI:`

External RTRS Interface (continued)

XRATE control commands

Command	Description

SELQUERY <option> <query type #>	Select query. Selecting correct parameter values for a query can be difficult, time consuming and error prone. Therefore, this command assists by selecting or displaying default data for a query type. This command has two arguments:
	• Option: This argument has the following values:
	— SELECT: Select default data for query type in the second argument. Also, parameters without default data that must be set are displayed. Note, this argument value does not display all parameters associated with the query type. Therefore, use DISPLAY to see all parameters for the query type.
	— DISPLAY: Display parameter values for query type in second argument.
	— DISPALL: Display for all query types.
	• Query type: This argument is only available with argument option values SELECT and DISPLAY. This argument has the following values:
	— 0: Coin call query
	— 1: Hotel call query
	— 2: Directory assistance call query
	— 3: Time and charges call query
	— 4: Directory assistance call completion
	Following are sample responses:
	SELECT: The SELECT option provides the query type and parameters to be initialized. The parameters are initialized by the query parameter commands.
	`>selquery select 0`
	`please check the values for the following parameters`
	`CARRID`
	`CLDNO`
	`CLGNO`
	`CMPNY`
	`TIME`

External RTRS Interface (continued)

XRATE control commands

Command	Description

	DISPLAY: The DISPLAY option provides the query type and parameter values.
	
	`>selquery display 1`
	`BILLOPT = LINE`
	`BILLPRTY = ORIG`
	`CLDNAT = NAT`
	`CLGAOSPID = NIL`
	`CLDNAT = UNRESTR`
	`EQUIP = AQ_TAX`
	`FGDSTAT = NO`
	`HANDLING = STATION`
	`OPRHAND = OPR_ASSIST`
	`PREFIX = 1_PLUS`
	`SRVDESC = STANDARD MTS`
	`SRVMOD = SERVICE`
	`TIMEDESC = CONCL`
	
	DISPALL: The DISPALL option lists available query types for the second argument.
	
	`>SELQUERY DISPALL`
	`0 = COIN CALL QUERY`
	`1 = HOTEL CALL QUERY`
	`2 = DIRECTORY ASSISTANCE CALL QUERY`
	`3 = TIME AND CHARGES CALL QUERY`
	`4 = DIRECTORY ASSISTANCE CALL COMPLETION`

External RTRS Interface (continued)

XRATE control commands

Command	Description

SHOW	Show. This command displays the value of every parameter. Following is a sample command and response.
	
	`>SHOW`
	`BILLOPT = LINE`
	`BILLPRTY = ORIG`
	`CARRID = NONE 0000`
	`CLDNO = 0123456789`
	`CLDNAT = NAT`
	`CLGAOSPID = TRM1`
	`CLGNO = 0123456789`
	`CLGNAT = UNRESTR`
	`CMPNY = 000000`
	`TIME = WED 1996 MAR 22 14:36:29`
	`EQUIP = POTS`
	`FGDSTAT = NO`
	`HANDLING = STATION`
	`INTERVAL = 1:00:00`
	`OPRHAND = NO_OPR`
	`PREFIX = 1_PLUS`
	`SRVDESC = STANDARD MTS`
	`SRVMOD = T_AND_C`
	`TIMEDESC = CURR`
	`TIMEOUT = 60`

TIMEOUT <seconds> <hundredths of seconds>	Timeout. This command specifies the maximum waiting period for receiving a reply from an RTRS query. The argument value range is 0 to 60 (seconds). Following are sample commands and responses.
	
	`>TIMEOUT`
	`TIMEOUT = 2`
	`>TIMEOUT 3`
	`TIMEOUT = 3`

External RTRS Interface (continued)

XRATE control commands

Command	Description

TRACE <format>	Trace. This command displays a dump of the last TCAP message sent by the RTRS query response. The argument has the following values:
	• RAW: An unformulated message display.
	• FORMAT: An unformulated and formatted message display.
	Following are sample responses:
	Success: Following is a raw hexadecimal dump of a successful query response received from the RTRS with the same message in a formatted form. This response also contains the optional ACG component.
	`>TRACE FORMAT`
	`RESPONSE MSG = E818EA16CF0183F211DF45060A03000000E3DF4A05`
	`0200200000E90DCF00D0020701F205810303`
	`PKG TYPE ID = RESPONSE  TRANS ID = 9182F9D0`
	`COMP TYPE ID = EA  CORR ID = 0  CHG AMT ID = 45`
	`CHG DESC = TIME & DHARGES  CHG UNITS = DEFAULT`
	`CHARGE = 227  TIME INTERVAL ID = 4A`
	`TIME DESC = DURATION OF CALL SEGMENT`
	`TIME INTERVAL = 2:00.00  COMP TYPE ID = E1`
	`OPER FMLY LNGTH = 07  OPER SPEC = AUTOMATIC CODE GAP`
	`ACG ID = 03  CONTROL CAUSE = DATABASE OVERLOAD`
	`ACG DUR = 128 SEC  ACG GAP = 2.00 SEC`
	Error code response: The following query was not successful. The RTRS returned an error response. This type of message may also contain an optional problem data component.
	`>TRACE FORMAT`
	`RESPONSE MSG = E80AEB08CF01D8D30108F200`
	`PKG TYPE ID = RESPONSE  TRANS ID = 4D90DF41`
	`COMP TYPE ID = EB  CORR ID = 0  ERROR CODE ID = 06`
	`ERROR CODE = DATA UNAVAILABLE`
	Action: Check the error code for clues on the error condition.

External RTRS Interface (continued)

XRATE control commands

Command	Description

	Problem code response: The following query was not successful. The RTRS sent a reject component in indicating a protocol or application error caused by a TCAP message with incorrect Component sections.
	
	`>TRACE FORMAT`
	`MSG RESPONSE = E80BEC09CF0187D5020202F200`
	
	`PKG TYPE ID = RESPONSE  TRANS ID = F90D7810`
	`COMP TYPE ID = EC  CORR ID = 0  PROB CODE ID = D5`
	`PROB CODE LNGTH = 02  PROB TYPE = INVOKE`
	`PROB SPEC = UNRECOGNIZED COMPONENT TYPE`
	
	Action: Check the problem type field.
	
	Abort response: The following query was not successful. An abort message was returned from the RSC or RTRS because an error was detected in the Transaction section of the TCAP message.
	
	`>TRACE FORMAT`
	`MSG RESPONSE = D70103`
	`PKG TYPE ID = ABORT  TRANS ID = 85FD90A7`
	`PABORT CAUSE ID = D7`
	`PABORT CAUSE = UNRECOGNIZED PACKAGE TYPE ID`
	
	Action: Check the PABORT CAUSE field.
	
	Unable to format response: The following query was not successful. The XRATE tool was unable to format the response from the last query.
	
	`>TRACE FORMAT`
	`MSG RESPONSE = E420C7049182F9D0E818EA16CF0183F211DF45060`
	`A03000000E3DF4A050200200000`
	
	`UNABLE TO FORMAT RESPONSE`
	
	Action: Attempt to decode the raw hexadecimal stream.
	
	Response to RAW option: The following query contains no formatted message display nor pass or fail information. The user requested only a raw hexadecimal dump of the last RTRS query response.
	
	`>TRACE RAW`
	`MSG RESPONSE = E818EA16CF0183F211DF45060A03000000E3DF4A`
	`050200200000`

External RTRS Interface (continued)

The following are the parameter commands. These commands check the status or setup the query parameters. Note, control command SELQUERY can also be used to select or check the query parameters.

XRATE parameter commands

Command	Description

BILLOPT <billmode>	Billing mode. This command sets or displays the method of payment. Values for the argument are:
	• CASH - Cash
	• LINE - Bill to line (default))
	• CLG_CARD - Calling card
	• DEBIT_CARD - Debit card (not supported)
	• CASH_CARD - Cash card (not supported)
	• CREDIT_CARD - Credit card
	The following are sample commands and responses that request (without argument), set (with supported argument), and set (with unsupported argument) the billing mode.
	
	`>BILLOPT`
	`BILLOPT = CASH`
	`>BILLOPT LINE`
	`BILLOPT = LINE`
	`>BILLOPT DEBIT_CARD`
	`DEBIT_CARD IS NOT CURRENTLY SUPPORTED`

BILLPRTY <billed party>	Billed party. This command sets or displays the party being billed. Values for the argument are:
	• ORIG - Originating party (default)
	• TERM - Terminating party
	• 3RD_NUM_ORIG - Third number - originator
	• 3RD_NUM_TERM - Third number - terminator
	Following are sample commands and responses.
	
	`>BILLPRTY`
	`BILLPRTY = TERM`
	`>BILLPRTY ORIG`
	`BILLPRTY = ORIG`

External RTRS Interface (continued)

XRATE parameter commands

Command	Description

CARRID <lata type,> <4 to 6 digits>	Carrier identifier. This command sets or displays the carrier type and identifier. Values for the lata type argument are:
	• INTER - InterLATA carrier
	• INTRA - IntraLATA carrier (not supported)
	• NONE - No carrier (default)
	The carrier identifier is 4 to 6 digits. The carrier id default is: 0000.
	Following are sample commands and responses.
	`>CARRID`
	`CARRID = NONE 888888`
	`>CARRID INTER 999999`
	`CARRID = INTER 999999`
	`>CARRID INTRA 999999`
	`INTRA IS CURRENTLY NOT SUPPORTED`

CLDNAT <cldnat>	Called number nature. This command sets or displays the nature of the called number. Values for the argument are:
	• NAT - national (default)
	• INTERNAT - international
	Following are sample commands and responses.
	`>CLDNAT`
	`CLDNAT = NAT`
	`>CLDNAT INTERNAT`
	`CLDNAT = INTERNAT`

CLDNO <up to 15 digits>	Called number. This command sets or displays the called party digits or the service access code. The call party number can be up to 15 digits. The default is 0000000000. Following are sample commands and responses.
	`>CLDNO`
	`CLDNO = 4085024587`
	`>CLDNO 0123456789`
	`CLDNO = 0123456789`

External RTRS Interface (continued)

XRATE parameter commands

Command	Description

CLGAOSPID <4 alphanumeric characters or NIL)	Calling account owner service provider identifier. This command sets or displays the calling AO SPID. Exactly 4 alphanumeric characters or NIL must be entered for the argument. If NIL is entered, this parameter is not sent in the query message to the RTRS database. The default is NIL. Use NIL to clear the CLGAOSPID parameter. The AO SPID is the company that is responsible for the calling party's end service.
	
	The entered SPID does not have to be datafilled in table SPID.
	
	The entered SPID must be in single quotes.
	
	If more or less than 4 alphanumeric characters are entered, an error message is displayed. An error message is also displayed if non-alphanumeric characters (neither digits nor alphabetic) are entered.
	
	Following are sample commands and responses.
	
	`>CLGAOSPID 'TRM1'`
	`CLGAOSPID = TRM1`
	`>CLGAOSPID`
	`CLGAOSPID = TRM1`
	
	`>CLGAOSPID NILTHE`
	`CLGAOSPID VALUE HAS BEEN CLEARED.`
	`>CLGAOSPID`
	`CLGAOSPID = NIL`

CLGNAT <clgnat>	Calling number nature. This command sets or displays the nature of the calling number. Values for the argument are:
	
	• RESTR - presentation restriction
	
	• UNRESTR - no presentation restriction (default)
	
	Following are sample commands and responses.
	
	`>CLDNAT`
	`CLDNAT = RESTR`
	`>CLDNAT UNRESTR`
	`CLDNAT = UNRESTR`

CLGNO <10 digits>	Calling number. This command sets or displays the calling party digits. The calling party number is 10 digits. The default is 0000000000. Following are sample commands and responses.
	
	`>CLGNO`
	`CLGNO = 4085024587`
	`>CLGNO 0123456789`
	`CLGNO = 0123456789`

External RTRS Interface (continued)

XRATE parameter commands

Command	Description

CMPNY <up to 6 digits>	Company code. This command sets or displays the company code. The company code can be up to 6 digits, enclosed in single quotes. The default is table TOPSPARM parameter RTRS_DEFAULT_COMPANY. Following are sample commands and responses.
	
	`>CMPNY`
	`CMPNY = 408502`
	`>CMPNY '012345'`
	`CMPNY = 012345`

External RTRS Interface (continued)

XRATE parameter commands

Command	Description
EQUIP <equipment>	Company code. This command sets or displays the equipment in the originating station. Following are the equipment argument values: • AQ_NOTAX: Auto quote - without tax (unsupported) • AQ_TAX: Auto quote - with tax • CENTREX: Centrex line (unsupported) • DORM: Dormitory line (unsupported) • HOSP: Hospital (unsupported) • IC_ALT: IC public - standard interface (unsupported) • IC_STAND: IC public - alternate interface (unsupported) • IPP_ALT: IPP alternate interface (unsupported) • IPP_STAND: IPP standard interface (unsupported) • LEC_ALT: LEC - alternate interface (unsupported) • LEC_CARD: LEC prepaid telecommunications card station (unsupported) • LEC_POSTPAY: LEC public - standard interface, postpay overtime • LEC_PREPAY: LEC public - standard interface, prepay interface • LEC_SEMI: LEC semi-public (unsupported) • MOBILE: Cellular/mobile (unsupported) • NOCOIN: Coinless (non intelligent payphone provider(IPP)) (unsupported) • NONCOIN_IPP: Coinless IPP (unsupported) • PAGER: Pager (unsupported) • PBX: Private branch exchange (PBX) line (unsupported) • PCS: Personal communication service (unsupported) • POTS: Plain old telephone service (POTS) line - business/residential • POTS_BIZ_FLAT: POTS line - business, flat rate (unsupported) • POTS_BIZ_MSG1: POTS line - business, message rate 1 (unsupported) • POTS_BIZ_MSG2: POTS line - business, message rate 2 (unsupported)

External RTRS Interface (continued)

XRATE parameter commands

Command	Description

EQUIP <equipment> (continued)	Company code (continued).
	• POTS_RES_FLAT: POTS line - residential, flat rate (unsupported)
	• POTS_RES_MSG1: POTS line - residential, message rate 1 (unsupported)
	• POTS_RES_MSG2: POTS line - residential, message rate 2 (unsupported)
	• PRIS_IPP: Prison (IPP) (unsupported)
	• PRIS_NOIPP: Prison (non-IPP) (unsupported)
	• RESERVED: reserved (unsupported)
	• VQ_NOTAX: Voice quote - without tax (unsupported)
	• VQ_TAX: Voice quote - with tax
	• WATS: Wide area telecommunication service (WATS) line (unsupported)
	The default is POTS. Following are sample commands and responses.
	
	`>EQUIP`
	`EQUIP = VQ_TAX`
	`>EQUIP POTS`
	`EQUIP = POTS`
	`>EQUIP POTS_RES_FLAT`
	`POTS_RES_FLAT IS NOT CURRENTLY SUPPORTED`

FGDSTAT <value>	Feature Group D status. This command sets or displays whether a call uses Feature Group D service. Values for the argument are YES or NO. The default is NO. Following are sample commands and responses.
	
	`>FGDSTAT`
	`FGDSTAT = NO`
	`>FGDSTAT YES`
	`FGDSTAT = YES`

HANDLING <handling>	Handling. This command sets or displays handling of the call for call types Station to Station and Person to Person. Values for the argument are STATION or PERSON. The default is STATION. Following are sample commands and responses.
	
	`>HANDLING`
	`HANDLING = PERSON`
	`>HANDLING STATION`
	`HANDLING = STATION`

External RTRS Interface (continued)

XRATE parameter commands

Command	Description

INTERVAL <minutes> <seconds> <hundredths of seconds>	Interval. This command sets or displays the time interval for calls (e.g. coin) that bill for a specified time interval. Command TIMEDESC indicates the meaning of this time interval. Following are the argument values:
	• minutes: 0 to 9999
	• seconds: 0 to 59
	• hundredths of seconds: 0 to 99
	The default is 1:00.00. Following are sample commands and responses.
	
	`>INTERVAL`
	`INTERVAL = 2:24.00`
	`>INTERVAL 3 15 00`
	`INTERVAL = 3 15 00`

OPRHAND <action>	Operator handled. This command sets or displays the type of operator intervention. Values for the argument are:
	• OPR_HAND - Operator handled
	• OPR_ASSIST - Operator assisted
	• AUTO_OPR - Automated operator
	• NO_OPR - Direct dialled (default)
	Following are sample commands and responses.
	
	`>OPRHAND`
	`OPRHAND = OPR_HAN`
	`>OPRHAND OPR_ASSIST`
	`OPRHAND = OPR_ASSIST`

PREFIX <prefix>	Prefix. This command sets or displays the dialed prefix digits. Values for the argument are 1_PLUS, 0_PLUS, 0_MINUS, 01_PLUS, 011_PLUS, 00_MINUS, and NO_PFX. The default is 1+. Following are sample commands and responses.
	
	`>PREFIX`
	`PREFIX = 0_PLU`
	`>PREFIX 1_PLUS`
	`PREFIX = 1_PLUS`

External RTRS Interface (continued)

XRATE parameter commands

Command	Description

SRVDESC <service description>< standard service type> or <enhanced service number>	Service description. This command the name (description) and type of service. Following are the arguments and values:
	• The service description argument values are:
	— STANDARD (default)
	— ENHANCED
	— AIN
	• The type of service argument is valid only when the service description is set to STANDARD. Values for the type of service are:
	— MTS - Message Telecommunications Service (default)
	— BLV - Busy line verification (unsupported)
	— DA - Directory assistance
	— DACC - Directory assistance call completion
	— MTS_OHDACC - Operator handled DACC with MTS
	— MTA_ADACC - Automated DACC with MTS
	• The enhanced service number argument is in the range 0 to 62. This argument is valid only when the service description is set to ENHANCED.
	Following are sample commands and responses.
	`>SRVDESC`
	`SRVDESC = AIN`
	`>SRVDESC STANDARD MTS`
	`>SRVDESC STANDARD BLV`
	`>BLV IS NOT CURRENTLY SUPPORTED`

External RTRS Interface (continued)

XRATE parameter commands

Command	Description

SRVMOD <query reason>	Service mode. This command sets or displays the purpose of the query. Values for the argument are:
	• SERVICE - Service (default)
	• QUOTE - Rate quotation (supported in release TOPS10). Use this parameter to test the estimate of charge capability. The XRATE tool sends the call characteristics to the external database for a charge calculation in the same way as an operator position.
	• T_AND_C - Time and charges
	• NOTIFY - Charge notification
	Following are sample commands and responses.
	`>SRVMOD`
	`SRVMOD = NOTIF`
	`>SRVMOD SERVICE`
	`SRVMOD = SERVICE`
	`>SRVMOD QUOTE`
	`SRVMOD = QUOTE`

External RTRS Interface (continued)

XRATE parameter commands

Command	Description

TIME <month> <day> < hour> <minute> <second>	Time. This command sets or displays the date and time for a query. Following are the arguments and values:
	• Month: JAN, FEB, MAR, APR, MAY, JUN, JUL, AUG, SEP, OCT, NOV, DEC}
	• Day: 1 to 31
	• Hour: 0 to 23
	• Minute: 0 to 59
	• Second: 0 to 59
	The default is the date and time XRATE was entered. Following are a sample commands and responses:
	• In the following response, the current year is used and the day of the week is calculated. Since valid argument values were entered, the query is updated.
	`>TIME MAR 8 11 21 18`
	`TIME = WED 1995 MAR 8 11:21:18`
	• The following command uses an invalid argument value for the number of days in April. Therefore, the query is not updated. Note, this command supports leap year. Therefore, February can have 29 days in leap years.
	`>TIME APR 31 20 04 10`
	`APR HAS ONLY 30 DAYS`

TIMEDESC <time description>	Time description. This command sets or displays the meaning of the time interval in the INTERVAL command. The default is CURR_CALL_DUR. Values for the argument are:
	• CURR: Duration of time for a current call
	• CONCL: Length of time for a concluded call (default)
	Following are sample commands and responses.
	`>TIMEDESC`
	`TIMEDESC = CURR`
	`>TIMEDESC CONCL`
	`TIMEDESC = CONCL`

Upon entry into XRATE, the parameters are not initialized to default values. Only COLD and RELOAD RESTART will automatically initialize these

External RTRS Interface (continued)

values. These values are given in the previous listing of commands and the following list.

Parameter command	Default value
BILLOPT	LINE
BILLPRTY	ORIG
CARRID	NONE 000000
CLDNAT	NAT
CLDNO	0000000000
CLGAOSPID	NIL
CLGNAT	UNRESTR
CLGNO	0000000000
CMPNY	Table TOPSPARM parameter RTRS_DEFAULT_COMPANY_CODE
EQUIP	POTS
FGDSTAT	NO
HANDLING	STATION
INTERVAL	1:00.00
OPRHAND	NO_OPR
PREFIX	1_PLUS
SRVDESC	STANDARD MTS
SRVMOD	SERVICE
TIME	Date and time XRATE was entered.
TIMEDESC	CURR

External RTRS Interface (continued)

Translations table flow

The External RTRS Interface translations tables are described in the following list:

- Table TRKGRP defines the incoming trunks
- Table COMPCODE defines internal/external rating for calls on trunk
- Table C7NETSSN defines CCS7 network nodes and subsystem names
- Table C7RPLSSN provides the set of remote subsystem replicate pairs
- Table C7LOCSSN provides information on the local subsystem,
- Table C7GTTYPE defines a profile of a global title
- Table C7GTT defines a translation from a digit to a result

The External RTRS Interface translation process is shown in the flowchart that follows.

Table flow for External RTRS Interface

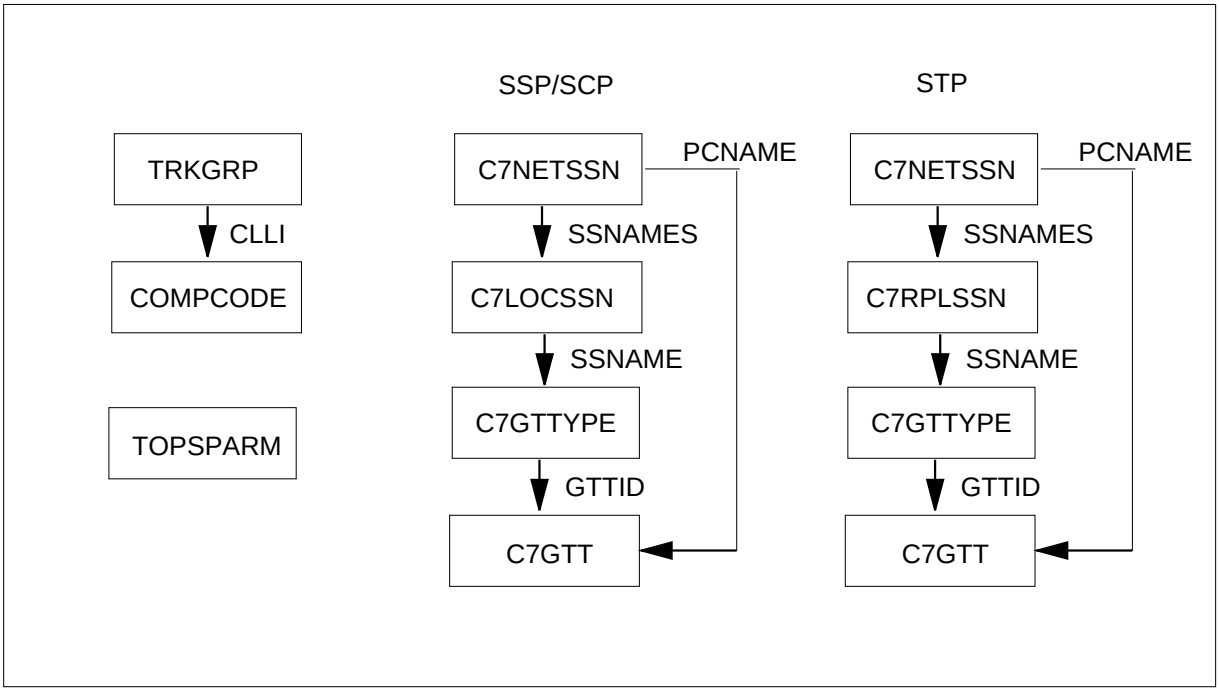

External RTRS Interface (continued)

The following table lists the datafill content used in the flowchart.

Datafill example for External RTRS Interface

Datafill table	Example data
TRKGRP	TRKCLLI1 TOPS 0 NPRT NCRT IC MIDL 919 PRT2 NLCA NSCR N RC HOTEL Y Y 0 0000 NONE SMT5 20 10 10 N SMD N BCNAME 56KDATA
COMPCODE	TRKCLLI1 201 220 $ N 007355 COMPANY_A Y
C7NETSSN	RTESET1 (RTRS 197)$
C7RPLSSN	RTRS (RTESET1 RTESET2 N)$
C7LOCSSN	RTRS 197 1 N N $
C7GTTYPE	RTRSGT 0 9 PCONLY (RTESET1 0) $ GT
C7GTT	RTESET1 (RTRS 197)$

Limitations and restrictions

The following limitations and restrictions apply to External RTRS Interface:

TOPS-IV Positions

TOPS-IV positions, which handle only TA traffic, are manufacture discontinued (MD), and have no new or changed screen displays. Therefore these positions do not display when a rating query is in progress, or when a rating query fails. On an externally rated call, the operator may experience a short time period when the rating query is outstanding and their keystrokes are ignored. The TOPS-IV operator receives invalid charges when rating fails on a coin call.

If a rating query fails, the TOPS-IV operator receives some indication via existing displays. This is because coin calls display invalid charges, and hotel TA calls are not rated while at an operator position. DA and DACC services are not handled by TOPS-IV operators. If an ACTS rating query fails, and the call is routed to the operator, the invalid charges are displayed on call presentation.

ADACC Enhancement (TOPS14)

The functionality defined by new table TOPSPARM parameter RTRS_ADACC_DAS_ANN_QUERY is office wide.

This activity does not add any internal real-time rating functionality nor does it impact internal real-time rated calls.

External RTRS Interface (continued)

The activity should only be activated if the DAS does use a hardcoded announcement for the ADACC surcharge of all calls or does not announce the charges for the ADACC service.

If the DAS depends on a numeric value determining what announcement is played when informing a customer of a ADACC surcharge, this activity would potentially cause an incorrect announcement to be played.

Rating periods

In accordance with the RTRS protocol document (NIS: Q234-1), the initial period of a coin call is equal to the coin initial recall period, and the overtime period of a coin call is equal to the coin recall period. See section “Initial, overtime, and recall periods" for more information.

The rating periods on a coin call must be evenly divisible by 60 seconds. The ACTS system cannot handle sub-minute coin periods.

The rating periods on a coin call must be less than or equal to 60 minutes. The DMS cannot set a timer for greater than 60 minutes.

A TOPS 125 log is generated if the RTRS returns an invalid rating period on a coin call. The query is handled as a failure.

The DMS does not send a coin query when a caller goes onhook in the middle of an overtime period of a post-paid overtime call. The caller is charged for the entire period, using the charge amount from the query/response at the start of the overtime period. This is the current method employed for internally rated calls.

There is no default initial coin period. For internally rated calls, the default initial coin period is hardcoded at 3 minutes. Neither rating system offers default overtime coin periods.

Coin charges

Externally rated calls of all types offer precise charging of up to 65534 units. Above this amount, a multiplier is used and the least significant digits are lost. This method is also used for Global TOPS.

As with Global TOPS, certain coin interactions such as overcollect are not supported when the charge amount is greater than 65534 units. Processing of the call continues as if the query succeeded.

External RTRS Interface (continued)

Time and Charges

When the ACTS system or the operator announces Time and Charges (T&C) to the billed party, the charge amount does not include tax. If the RTRS includes tax in an additional charge parameter of a response, it is ignored by the DMS.

Intercept calls

In accordance with the RTRS protocol document (NIS: Q234-1), intercept calls are not rated.

Busy Line Verification and Interrupt (BLV/INT)

The BLV/INT services currently cannot be real-time rated using the internal rating system. Therefore, BLV/INT is not rated with the external rating system.

TCAP interface

Communication with the Real Time Rating System database must be over a CCS7 ANSI-2 TCAP interface.

The functionality supports only the North American numbering plan (i.e. NPA-NXX-XXXX) for calling numbers.

CCS7 type MSB7s cannot exist in an office which uses this functionality. Each DMS TCAP application has a corresponding subsystem name (RTRS). Internally, subsystem names are represented by a numeric value. The numerical value is not to be confused with the subsystem number. CCS7 type MSB7s only support applications with a value of 70 or less. The RTRS application value is greater than 70. Therefore, LIU7s must be used instead of MSB7s. A table control description of the limitation is as follows:

- The datafill of table C7LOCSSN with one of the subsystem names with a numeric value above 70 is not permitted when an MSB7 with a C7 and or N7 Hardware Class is datafilled in table MSBINV.
- Similarly, datafill of C7 or N7 in the MSB7's HW_CLASS is denied when at least one of the subsystem names with a numeric value greater than 70 is datafilled in table C7LOCSSN.

DMS TCAP applications have the option of using the TESTSS facility to test CCS7 Subsystems.

SPID

If the RTRS_VERSION TOPSPARM parameter is set to Version_1, SPID encoding is not performed. This condition occurs even if SPID processing is active. And, the SPID optional parameter is not sent in the RTRS query.

External RTRS Interface (continued)

XRATE tool

Only one user at a time is allowed inside the XRATE increment. If a second user attempts to access XRATE, the following error message is displayed:

```
XRATE IS ALREADY IN USE BY <username>
```

TOPS10 enhancements

The index into table COMPCODE can be set to have all calls on the incoming trunk for externally rated, or to specify NPA-NXX combinations for external rating. Because the Open numbering plan does not use an NPA-NXX format, the index should typically specify all calls on the incoming trunk to be externally rated. See the datafill procedure section on table COMPCODE.

This feature creates a version range of support for the external rating protocol of X to X-3, with X as the highest supported version. During a new load application, the protocol version in table TOPSPARM is updated as necessary if the new load supports a version that is more than 3 greater than the current value in RTRS_VERSION. For example, if parameter RTRS_VERSION is currently set to VERSION_2, and a new load supports up to VERSION_6, the parameter is updated to VERSION_3 during the ONP in order to meet the X-3 support rule.

The Estimate of Charges feature is limited to OPP operator positions only.

When performing an Estimate of Charges with external rating, no rater query is sent until the mandatory information of calling number, called number, billing method, and duration have been satisfied.

Station paid coin calls requesting an estimate create a unique situation. If the rating query fails on the estimate, the operator must re-class charge the call if the call is to be completed. Rating queries on coin calls include the reconnect times for initial and overtime periods in the query response. When the coin call is initially class charged as station paid, this information is returned. If an estimate of charges is then performed, and the rating query fails, the recall time periods are reset to zero. The operator must then re-class charge the call so that these time periods can be resent and the call completed with the correct recall periods.

The Estimate of charges using external rater is available only for table TOPSPARM parameter RTRS_VERSION value VERSION_2 and above of the rater protocol. The Estimate of Charges key function is disallowed if external rater is in force and RTRS_VERSION is VERSION_1.

External RTRS Interface (continued)

The RTRS protocol uses an ANSI-2 TCAP interface. Therefore all layers below TCAP including the network must be ANSI versus CCITT in order to use external rating, regardless of the numbering system employed.

This functionality is subject to the limitations and restrictions in the supported functionality Estimated Call Charges, OSB00101. Refer to that functionality for details.

Hotel enhancements (TOPS11)

The external rating query must successfully return charges for the call in order for the module code containing charges to be appended to the AMA record.

Interactions

The following paragraphs describe the interactions between External RTRS Interface and other functionalities.

ACTS: ACTS calls can be rated externally.

OC: External rating can be used in an Operator Centralization (OC) environment. As with LIDB, the query originates from the remote switches, so the remote switches must be included in the SS7 network. The external rating functionality must be enabled in remote TOPS switches.

OPP: The external rating system functionality makes some modifications to the Open Position Protocol.

QMS: If the Queue Management System (QMS) is in use, calls can be rated externally. If the QMS service is datafilled as a base service in table TQMSSERV, the base service is used for the query. If the QMS service is datafilled as a custom service, this service is sent as an enhanced service in the query message. The external rater must be aware of how to rate custom QMS services. Furthermore, custom QMS services must have the same value in table SERVNAME across all TOPS switches using a particular RTRS.

SPID:

- Support of SPID is dependent on functionalities TOPS SPID Branding (UNBN0103) and SPID Assignment (UNBN0101).
- The new XRATE functionality associated with adding the CLGAOSPID parameter must interact with current XRATE tool functionality and have no impact.
- If the RTRS_VERSION TOPSPARM parameter is set to Version_1, SPID encoding is not performed and the SPID optional parameter is not sent in the RTRS query.

Activation/deactivation by the end user

External RTRS Interface requires no activation or deactivation by the end user.

Billing

This functionality does not impact AMA. Calls rated as invalid charges have identical AMA records whether the call was rated internally or externally.

The rate step is not recorded on AMA so its absence on externally rated calls does not affect AMA.

Hotel enhancement (TOPS11)

For release TOPS11, TOPS switch externally rated hotel calls can generate AMA module code 60 (North America) or 36 (open numbering). Before this release, the same capability was used for internally rated calls. But, externally rated hotel calls did not append AMA module code 60 or 36 for hotel calls.

The external rating query must successfully return charges for the call in order for the module code containing charges to be appended to the AMA record

The actual structure code of the AMA record varies depending on site parameters. This feature only enables a module code containing charges to be appended to the AMA record.

ADACC enhancement (TOSP14)

There are no new AMA changes associated with this feature. If new parameter RTRS_ADACC_DAS_ANN_QUERY = N, there is no impact to the AMA record. Only the DAS receives the surcharge value of 0. The AMA record reflects the surcharge indicated by the External RTRS regardless of the announcement played by the DAS.

Station Message Detail Recording

External RTRS Interface does not affect Station Message Detail Recording.

Datafilling office parameters

Before the TCAPTRID Replacement functionality, the parameter max_no_of_trans_id was used to identify the maximum value of Transaction IDs. This value is no longer used. However, the parameter will not be removed.

External RTRS Interface (continued)

Datafill sequence

The following table lists the tables that require datafill to implement External RTRS Interface. The tables are listed in the order in which they are to be datafilled.

- Table TRKGRP defines the incoming trunks
- Table COMPCODE defines internal/external rating for calls on trunk
- Table C7NETSSN defines CCS7 network nodes and subsystem names
- Table C7RPLSSN provides the set of remote subsystem replicate pairs
- Table C7LOCSSN provides information on the local subsystem
- Table C7GTTYPE defines a profile of a global title
- Table C7GTT defines a translation from a digit to a result

Datafill tables required for External RTRS Interface

Table	Purpose of table
COMPCODE	Company Code defines internal/external rating for calls on trunk
TOPSPARM	TOPS Parameters contains new parameters for RTRS
VROPT	Voice Response Option controls TOPS-BP positions.
C7NETSSN	CCS7 Network Subsystem Routing defines CCS7 network nodes and subsystem names
C7RPLSSN	CCS7 Replicate Subsystem provides the set of remote subsystem replicate pairs
C7LOCSSN	CCS7 Local Subsystem provides information on the local subsystem
C7GTTYPE	CCS7 Global Title Translation Type defines the profile of a global title
C7GTT	CCS7 Global Title Translation defines a translation from a digit to a result

Datafilling table COMPCODE

Table COMPCODE associates a six digit company code against an incoming trunk and NPA-NXX. Also, the table indicates which incoming trunks and NPA-NXXs use RTRS instead of the internal rating system

When external real-time rating is performed on a call, table COMPCODE is consulted for the company code to send to the external rater database (the RTRS).

Note: Incoming trunks can serve more than one company so the NPA-NXX is an optional part of the key for determining the company code.

Table TRKGRP must be datafilled before table COMPCODE. The CLLI name must be deleted from this table before it can be deleted from table TRKGRP.

This table can be datafilled with 0 to 8191 tuples. Restart is not required to increase the size.

Following are the fields.

Datafilling table COMPCODE

Field	Subfield or refinement	Entry	Explanation and action
IINCOMING		See subfields	Incoming. Key to the table. This field consists of subfields TRUNK and NPANXX.
	TRKCLLI	clli name from table TRKGRP	Trunk clli. An incoming or two-way trunk CLLI that is one of the following types: TOPS, IT, ATC, RONI.
	NPANXX	0 to 2 numbers in range 200 to 999	The NPA or the NPA and NXX can be used to further qualify the incoming trunk in associating a company code. This field is optional (just enter a $). If no NPA-NXX is specified, the company code for this entry applies to all calls coming in from the trunk specified in TRUNK which require real-time rating, regardless of NPA-NXX. If the NPA is specified, the NXX is optional (just enter a $). If only the NPA is specified, the company code for this entry applies to all real-time rated calls coming in from the trunk specified in TRUNK with an NPA equal to the one entered in this field, regardless of NXX. Attempting to datafill a duplicate tuple results in an error message. For example, if a tuple with a key of TRKCLLI1 $ is already present, and an attempt is made to datafill a tuple with a key of TRKCLLI1 703 $, an error message is displayed and the add operation will fail. Note that if the first entry had been TRKCLLI1 919 $, datafilling TRKCLLI1 703 $ would be legal because there is no duplication. Note, this field is not applicable for Open Numbering.

External RTRS Interface (continued)

Datafilling table COMPCODE

Field	Subfield or refinement	Entry	Explanation and action
COMPCODE		see subfield	Company Code. This field consists of subfield CCODESEL and refinement.
	CCODESEL	Y or N	Company Code Select. This subfield indicates if the default company code specified in table TOPSPARM is to be used. A value of Y (yes) means that the default company code is used for all externally rated calls originating from the specified TRUNK and NPA-NXX. A value of N (no) means that the company code specified in field COMPCODE is used for calls requiring real-time rating which come in from the specified TRUNK and NPA-NXX. If N is entered, datafill refinement COMPCODE.
	COMPCODE	000000 to 999999	Company Code. Enter code assigned to company. This field only appears if subfield CCODESEL is set to N.
COMPNAME		alphanumeric (up to 16 characters)	Company Name. This field indicates the name of the company associated with the traffic coming in from the supplied TRUNK and NPA-NXX. This field is for informational purposes only. It is not used by other tables or by any software. Any string up to 16 characters in length can be entered.
XRATESRV		Y or N	External Rating System. This field indicates if the real-time rated calls originating from the specified TRUNK and NPA-NXX are to be served by the external real-time rating system or the internal rating system. Value Y (yes) selects the external rater and value N (no) selects the internal rater.

Datafill example for table COMPCODE

The following example shows sample datafill for table COMPCODE.

MAP display example for table COMPCODE

```
INCOMING             COMPCODE    COMPNAME   XRATESRV
-------------------------------------------------------
TRKCLLI1 201 220 $    N 007355    COMPANY_A     Y
TRKCLLI2 704 552 $    N 102275    COMPANY_Y     Y
TRKCLLI2 704 644 $     Y          COMPANY_X     Y
TRKCLLI3 $            N 002616    COMPANY_X     N
TRKCLLI4 919 $        N 000922    COMPANY_X     Y
```

In the above example, the following calls are served by the external rater for their real-time rating needs:

- calls with NPA-NXX = 201-220 on incoming trunk TRKCLLI1
- calls with NPA-NXX = 704-552 on incoming trunk TRKCLLI2
- calls with NPA-NXX = 704-644 on incoming trunk TRKCLLI2
- calls with NPA = 919 on incoming trunk TRKCLLI4

In the above example, the following calls are not served by the external rater for their real-time rating needs:

- calls on incoming trunk TRKCLLI3
- all calls on incoming trunks not datafilled in this table (unless RTRS_DEFAULT_SYSTEM = EXTERNAL in TOPSPARM)
- calls on incoming trunk TRKCLLI1 with NPA-NXX not equal to 201-220
- calls on incoming trunk TRKCLLI2 with NPA-NXX not equal to 704-644 or 704-552
- calls on incoming trunk TRKCLLI4 with NPA not equal to 919

Note that calls on TRKCLLI2 with NPA-NXX = 704-644 use the default company code datafilled in table TOPSPARM.

Different companies can share the same incoming trunk. This is the case with TRKCLLI2 in the example. COMPANY_X and COMPANY_Y both use TRKCLLI2. The NPA-NXX is used to distinguish between the two companies. Note that this is only possible if the NPA-NXX is different for COMPANY_X traffic than COMPANY_Y traffic. If COMPANY_Y also served 704-644 on TRKCLLI2, then it would not be possible with this table to give them unique company codes and the external rater would be unable to rate differently for COMPANY_X and COMPANY_Y based on company code.

External RTRS Interface (continued)

The company name is for informational purposes only for the craftsperson. Note that any legal table control string can be input under company name. Also note that the following example is legal:

MAP display example for table COMPCODE

```
INCOMING              COMPCODE    COMPNAME   XRATESRV
-------------------------------------------------------
TRKCLLIA 201 220 $    N 000222      XYZ         Y
TRKCLLIB 704 644 $    N 000222      ABC         Y
```

That is, a company code can be associated with multiple company names.

Datafilling table TOPSPARM

Six new parameters are added to table TOPSPARM.

The following table shows the datafill specific to External RTRS Interface for table TOPSPARM. Only those fields that apply directly to External RTRS

External RTRS Interface (continued)

Interface are shown. For a description of the other fields, refer to the data schema section of this document.

Datafilling table TOPSPARM

Parameter name	Explanation and action
RTRS_ADACC_DAS_ANN_QUERY	This parameter enables/disable the ADACC surcharge query sent to the external real-time rating system. The values are as follows: • Y - Perform the ADACC surcharge query. Use this value when ADACC calls can have different surcharges. This value is the default. • N - Disable the ADACC surcharge query. This value should only be used if all of the following conditions are met: — All ADACC calls have the same surcharge. — The DAS has a pre-recorded hardcoded announcement of the static surcharge or the charges are not announced.
RTRS_ADACC_QUERY_FAIL_ACTION	This parameter indicates the error recovery action if a rate could not be obtained for the ADACC portion of a real-time rated call. This takes place from a coin or hotel phone. Following are the values: • BLOCK: The subscriber is given an announcement indicating technical difficulties and the call is terminated. • OPER: The subscriber is connected to an operator. • FREE: The subscriber is not charged for the ADACC service and the call progresses.
RTRS_DEFAULT_COMPANY_CODE	This parameter provides the default company code for calls requiring real-time rating which do not have an associated company code in table COMPCODE per their origination status (trunk, NPA-NXX). The range is 000000 to 999999.
RTRS_DEFAULT_SYSTEM	This parameter determines the real-time rating system (INTERNAL or EXTERNAL) for calls requiring real-time rating which do not have an entry in table COMPCODE per their origination status (trunk, NPA-NXX), A value of INTERNAL selects the older table driven real-time rating system is used in determining the call's rate(s). A value of EXTERNAL selects the external real-time rating system (the RTRS) to query the call's rate(s).

External RTRS Interface (continued)

Datafilling table TOPSPARM

Parameter name	Explanation and action
RTRS_FIRST_MTS_COIN_ QRYFL_ACTION	This parameter indicates the error recovery action if a rate could not be obtained from the RTRS for the first period of a coin call (pre or post pay overtime) if at ACTS. Following are the values: • BLOCK: The subscriber is given an announcement indicating technical difficulties and the call is terminated. • OPER: The subscriber is connected to an operator. • FREE: The subscriber is not charged for the first coin time period and the call progresses.
RTRS_SUBSE_MTS_COIN_ QRYFL_ACTION	This parameter indicates the error recovery action if a rate could not be obtained from the RTRS for a non-initial period of a coin call (pre or post pay overtime) if at ACTS. • OPER: The subscriber is connected to an operator. • FREE: The subscriber is not charged for the coin time period and the call progresses.

External RTRS Interface (continued)

Datafilling table TOPSPARM

Parameter name	Explanation and action
RTRS_TIMEOUT	This parameter indicates the time in seconds when a query to the RTRS is considered timed-out. The range is 0 to 600 (seconds).
RTRS_VERSION	This parameter indicates the external rater protocol version. The values are: • VERSION_1 - This version is the original release (TOPS04) of this functionality. This is the default value. • VERSION_2 - This version is the current release (TOPS09) and beyond of this functionality. In release TOPS10, during a One Night Process (ONP), if the protocol version in the new load is up to 3 versions higher than in the existing load, parameter RTRS_VERSION is increased by one version. For example, if the current value is VERSION_2 and the new load is VERSION_6, RTRS_VERSION is changed from VERSION_2 to VERSION_3. Caution must be used when upgrading to a new version of rater protocol. The external rater database must be able to support the new version. Also, if other switches are using the database, the other switches must be coordinated with the database protocol version upgrade. Refer to document NIS Q234-2.1 for detailed information on external rating protocol.

Datafill example for table TOPSPARM

The following example shows sample datafill for table TOPSPARM.

External RTRS Interface (continued)

MAP display example for table TOPSPARM

```
PARMNAME                                                PARMVAL
--------------------------------------------------------------
RTRS_ADACC_DAS_ANN_QUERY                                Y
RTRS_ADACC_QUERY_FAIL_ACTION                            BLOCK
RTRS_DEFAULT_COMPANY_CODE                               121543
RTRS_DEFAULT_SYSTEM                                     INTERNAL
RTRS_FIRST_MIT_COIN_QRYFL_ACTION                        OPER
RTRS_SUBSE_MTS_COIN_QRYFL_ACTION                        OPER
RTRS_TIMEOUT                                            1
RTRS_VERSION                                            VERSION_2
```

Datafilling table VROPT

The following table shows the datafill specific to External RTRS Interface for table VROPT. Only those fields that apply directly to External RTRS Interface are shown. For a description of the other fields, refer to the data schema section of this document.

Datafilling table VROPT

Parameter name	Explanation and action
DA_BP_HOTEL_ROOM_ REQUIRED	The TOPS-BP position can handle sent-paid DA traffic. It does not have any coin displays so datafill should not route coin traffic to TOPS-BP positions. Hotel calls can be handled by TOPS-BP positions, but the room number cannot be entered. Therefore, parameter DA_BP_HOTEL_ROOM_REQUIRED must be set to N.

Datafill example for table VROPT

The following example shows sample datafill for table VROPT.

MAP display example for table VROPT

```
PARM                                                    VALUE
------------------------------------------------------------
DA_BP_HOTEL_ROOM_REQUIRED                                 N
```

Datafilling table C7NETSSN

This table is not modified. However, the new valid subsystem name RTRS must be datafilled for use by the other CCS7 tables.

The following table shows the datafill specific to External RTRS Interface for table C7NETSSN. Only those fields that apply directly to External RTRS Interface are shown. For a description of the other fields, refer to the data schema section of this document.

Datafilling table C7NETSSN

Field	Subfield or refinement	Entry	Explanation and action
SSNAMES	SSNAME	RTRS	Subsystem Name. Enter new valid subsystem name RTRS.

Datafill example for table C7NETSSN

The following example shows sample datafill for table C7NETSSN.

MAP display example for table C7NETSSN

```
PCNAME      SSNAMES
------------------------------------------------------------
RTESET1     (RTRS 197)$
```

Datafilling table C7RPLSSN

The following table shows the datafill specific to External RTRS Interface for table C7RPLSSN. Only those fields that apply directly to External RTRS Interface are shown. For a description of the other fields, refer to the data schema section of this document.

Datafilling table C7RPLSSN

Field	Subfield or refinement	Entry	Explanation and action
SSNAME		RTRS	Subsystem Name. New subsystem name RTRS can be datafilled.

Datafill example for table C7RPLSSN

The following example shows sample datafill for table C7RPLSSN.

External RTRS Interface (continued)

MAP display example for table C7RPLSSN

```
SSNAME    REPLIST
-------------------------------------------------------
 RTRS    (RTESET1  RTESET2  N)$
```

Datafilling table C7LOCSSN

The following table shows the datafill specific to External RTRS Interface for table C7LOCSSN. Only those fields that apply directly to External RTRS Interface are shown. For a description of the other fields, refer to the data schema section of this document.

Datafilling table C7LOCSSN

Field	Subfield or refinement	Entry	Explanation and action
SSNAME		RTRS	Subsystem Name. New subsystem name RTRS can be datafilled. If datafill of the subsystem name is prevented, refer to the “Limitations and restrictions" section.

Datafill example for table C7LOCSSN

The following example shows sample datafill for table C7LOCSSN.

MAP display example for table C7LOCSSN

```
SSNAME  SSNUMBER  MININST  REPLINFO  TFMI  PCNAMES
-------------------------------------------------------
 RTRS     197       1         N       N       $
```

Datafilling table C7GTTYPE

The following table shows the datafill specific to External RTRS Interface for table C7GTTYPE. Only those fields that apply directly to External RTRS

Interface are shown. For a description of the other fields, refer to the data schema section of this document.

Datafilling table C7GTTYPE

Field	Subfield or refinement	Entry	Explanation and action
GTTID		RTRSGT	GTT Identifier. New translation name RTRSGT can be datafilled.

Datafill example for table C7GTTYPE

The following example shows sample datafill for table C7GTTYPE.

MAP display example for table C7GTTYPE

```
GTTNAME  GTTYPE        GTTID
-------------------------------------------------------
RTRSGT   ANSI7 11     (RTRSGT)
```

Datafilling table C7GTT

The following table shows the datafill specific to External RTRS Interface for table C7GTT. Only those fields that apply directly to External RTRS Interface are shown. For a description of the other fields, refer to the data schema section of this document.

Datafilling table C7GTT

Field	Subfield or refinement	Entry	Explanation and action
GTTRSLT	SSNAME	RTRS	Subsystem Name. New subsystem name RTRS can be datafilled. This field appears when subfield RESULT is set to PCSSN, SSNONLY, or NEWGT. This name was defined in table C7NETSSN.

Datafill example for table C7GTT

The following example shows sample datafill for table C7GTT.

External RTRS Interface (end)

MAP display example for table C7GTT

```
GTTKEY      GTTRSLT
-------------------------------------------------------
RTRSGT 0 9  PCSSN  (RTESET2 RTRS 0) $  SSN
```

Translation verification tools

External RTRS Interface does not use translation verification tools.

SERVORD

External RTRS Interface does not use SERVORD.

IN Operator Backup

Ordering codes

Functional group ordering code: ENSV0101

Functionality ordering code: ENSV0106

Release applicability

TOPS12 and up

IN Operator Backup was introduced in TOPS12.

Prerequisites

To operate, IN Operator Backup has the following prerequisites:

- Base Generic, BAS00003
- Operator Services Basic, OSB00101, and table TOPSFTR parameter TOPS_ON_OFF_SWITCH = Y
- Table TOPSFTR parameter IN_OPERATOR_BACKUP = Y

Description

This functionality provides operator backup for an intelligent (IN) network service when there is a need for a human attendant. This may be due to subscriber input (for example, pressing 0 for an operator), subscriber error (for example, invalid calling card), system outage (for example, an IN node is out of service), and so forth.

IN operator backup is one capability within IN Interworking. Future functionalities will provide other IN capabilities within IN Interworking. Therefore, when this functionality refers to IN Interworking, consider it as operator backup.

This functionality is provided by the following feature:

Feature number	Feature name
AF7805	TOPS IN Interworking

Operation

Over the years, the telephony network has evolved to become a distributed network, which includes different types of intelligent nodes that interwork to provide services. The following figure shows an example network.

IN Operator Backup (continued)

Example IN Interworking network

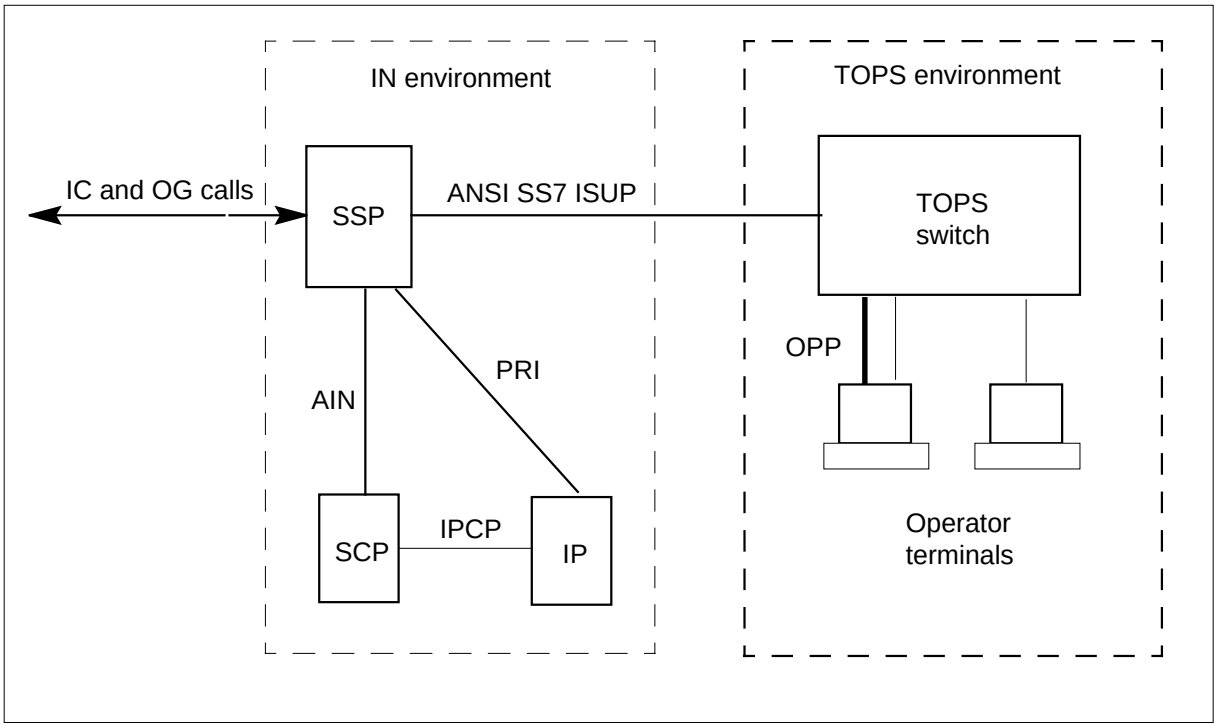

The IN nodes in the above network are as follows:

- Service switching point (SSP)

  The SSP processes incoming call originations and outgoing call terminations. If the appropriate criteria are met, the call may be presented to the service control point (SCP) for service processing. The SSP provides connectivity to the above IP over a primary rate interface (PRI). And, the SSP provides connectivity over ANSI SS7 ISUP to the TOPS switch for IN Interworking.

- Service Control Point (SCP)

  The SCP provides service control logic for the SSP and connects to the switch using a TCAP interface which carries call data and control but no voice.

- Intelligent peripheral (IP)

  The IP provides voice processing, which plays announcements, prompts the subscriber, and collects subscriber input.

The SSP, SCP, and IP work together to provide services.

For an IN Interworking call, the TOPS switch does not have control of the call, the IN environment is in control. However, the TOPS swich can release the call at any time. The TOPS switch is responsible for the following:

- Call setup - route calls to operators that can serve the call and provide the operator with information to serve the call.
- Call in progress - pass information between the IN environment (SCP/SSP) and operator terminal.
- Call release - release the connection between the TOPS and IN environments once the call has ended.

Originating connection

The TOPS switch receives calls over an ANSI SS7 ISUP trunk. ISUP trunks running different types of traffic can be used for IN Interworking traffic. Therefore, dedicated trunks are not required for IN Interworking calls.

Note, functionality GR317/GR394 ISUP to/from TOPS, OSEA0102, provides information on translating ISUP calls.

Selection of the IN calls on the trunk is with new call origination (CO) type ININTWRK.

The new CO can be datafilled in any of the TOPS tables that use call origination: TOPS, AMASRVID,, QMSTOPS, TOPSAMA, and TDBNORM. The CO may also be added to tables DABILL, TOPSOIC, and ADACCOPT, although Directory Assistance (DA) is not supported for IN Interworking calls.

Also, the new CO can be passed to the existing protocols that have a call origination field except for the open automated protocol (OAP) and automated alternate billing service (AABS). These protocols are not affected since IN Interworing calls cannot be routed to OSSAIN or AABS.

For IN calls, the new CO can be used to route calls to an operator queue in the queue management system (QMS). Table TRKGRP can route to a pretranslator that points to table TOPS as shown in the following example.

MAP display example for subtable STDPRTCT.STDPRT

```
FROMDIGS   TODIGS      PRETRTE
-------------------------------------------------------
0302       0320        T NL 0 TOPS  ININTWRK 11 11 NONE
```

IN Operator Backup (continued)

Then, table TOPSTOPT selects QMS (table QMSTOPS) for the trunk instead of table TOPS. Table QMSTOPS uses the new CO type ININTWRK to select the initial call type for queueing (CT4Q).

QMS can refine the CT4Q according to many criteria, which is dependent on the available information. The possible refinements are as follows:

- prefix (OA or DD)
- originating class of service
- originating trunk group or originating (calling) number
- TOPS billing restrictions
- terminating (called) number
- inter-LATA carrier identification code (CIC)
- time of day
- language
- legacy TOPS automated system
- service provider identifier (SPID)
- billing satisfied
- call type category (for example, national-local, national-non-local, international)

For IN calls, information is available for the following criteria:

- Originating trunk group or originating (calling) number

  The originating trunk group is the ISUP trunk used to route the call to the TOPS switch. The trunk is datafilled in table ISUPTRK.

  The calling number is sent in the ISUP IAM Calling Number Parameter. If the display calling number field is set to Y in table TOPSTOPT, then the calling number is displayed at the operator terminal.

- Terminating (called) number

  The terminating number in the ISUP IAM Called Number Parameter is used by the SSP to route the IN Interworking call to the TOPS switch. It does not represent the subscriber's called number.

  Once the operator is selected, the terminating number is cleared from the TOPS data (and not sent to the operator terminal). This number is not stored as the called number in the TOPS switch since it is not the true called party directory number.

- Inter-LATA Carrier Identification Code (CIC)

The CIC may be sent in the ISUP IAM Carrier Identification Code Parameter. If sent, the CIC is displayed at the operator terminal.

- Language

  The calling party's language is sent in the Language parameter in the INCP message. This value overrides the language that may have been sent in the ISUP Calling Party Category parameter. The language must be datafilled in table TOPSLANG.

  This value is also sent to the operator terminal at call begin.

- Coin/Hotel

The ISUP Originating Line Identifier (OLI) parameter specifies the station class of the call. If the call is from a coin or hotel phone, this information is sent to the operator. However, the IN Interworking call does not receive any coin or hotel processing for billing purposes. The following areas are sent the correct service class (for example, coin, hotel). The call origination type should be used to determine if the service class was used for billing by the TOPS switch.

- open position protocol (OPP) (for operator display)
- personal audio response system (PARS)
- automatic message accounting (AMA) record
- operator centralization (OC) (to send the correct service class to OC Host)
- service analysis
- management information system (MIS)
- QMS routing

SOC

This functionality is optional, controlled by software optionality code (SOC) option ENSV0106, IN Interwrking.

This SOC option is state controlled, not usage controlled. If an IN call is routed to the TOPS switch and the SOC option is IDLE, the call is taken down. And, log TOPS 303 is generated in this case. A REL is sent to the SSP.

Functionality GR317/GR394 ISUP to/from TOPS, OSEA0102 must also be ON for this IN Fall Back functionality.

IN Operator Backup (continued)

Logs

The following logs are generated:

- TOPS 303, IN Interworking SOC Not On: This log is generated when the TOPS switch receives an IN Interworking call and the SOC state is not set to ON.
- TOPS 603, IN Interworking Protocol Violation: This log is generated when the TOPS switch determines there was a protocol violation in the ISUP message sent by the SSP.
- TOPS 604, IN Interworking Reject Received: This log is generated when the TOPS switch receives a Reject message from the SSP.
- TOPS 605, Invalid ISUP message Received: This log is generated when an unexpected ISUP message is received and the trunk group is not datafilled in table ISUPTRK.
- TOPS 606, Bad Route for IN Interworking Call: This log is generated when a call with CO type of INTERWORKING routes incorrectly.
- TOPS 607, IN Interworking ReturnError Sent: This log is generated when the TOPS switch sends a ReturnError to the SSP.
- TOPS 608, IN Intworking Response Timer Popped: This log is generated when the IN_INTERWORKING_RESPONSE timer expires when waiting for a message from the SSP.

OMs

The operational measurement changes are as follows:

- New OM group ININTWRK is added to peg the number of messages sent and received for IN Interworking calls. A tuple is added for every trunk group datafilled in table ISUPTRK.
- New OM registers are added for the New OAP Pass Through Request operation. The registers are added to OM group OAPCALP9.

Translations table flow

The IN Operator Backup translations tables are described in the following list:

- Table CLLI defines the names of trunk groups.
- Table ISUPTRK provides information for ISUP trunks that interact with the TOPS environment.
- Table TRKGRP defines trunk group characteristics.
- Table TRKSGRP defines the trunk subgroups.
- Table TRKMEM defines trunk group members.

IN Operator Backup (continued)

- Table STDPRTCT provides a list of standard pretranslation tables.
- Subtable STDPRTCT.STDPRT is used to check the called digits for IN Interworking calls and direct the call.
- Table TOPSTOPT defines options for TOPS office trunks.
- Table QMSTOPS defines a starting CT4Q for a call origination type.

The IN Operator Backup translation process is shown in the flowchart that follows.

Table flow for IN Operator Backup

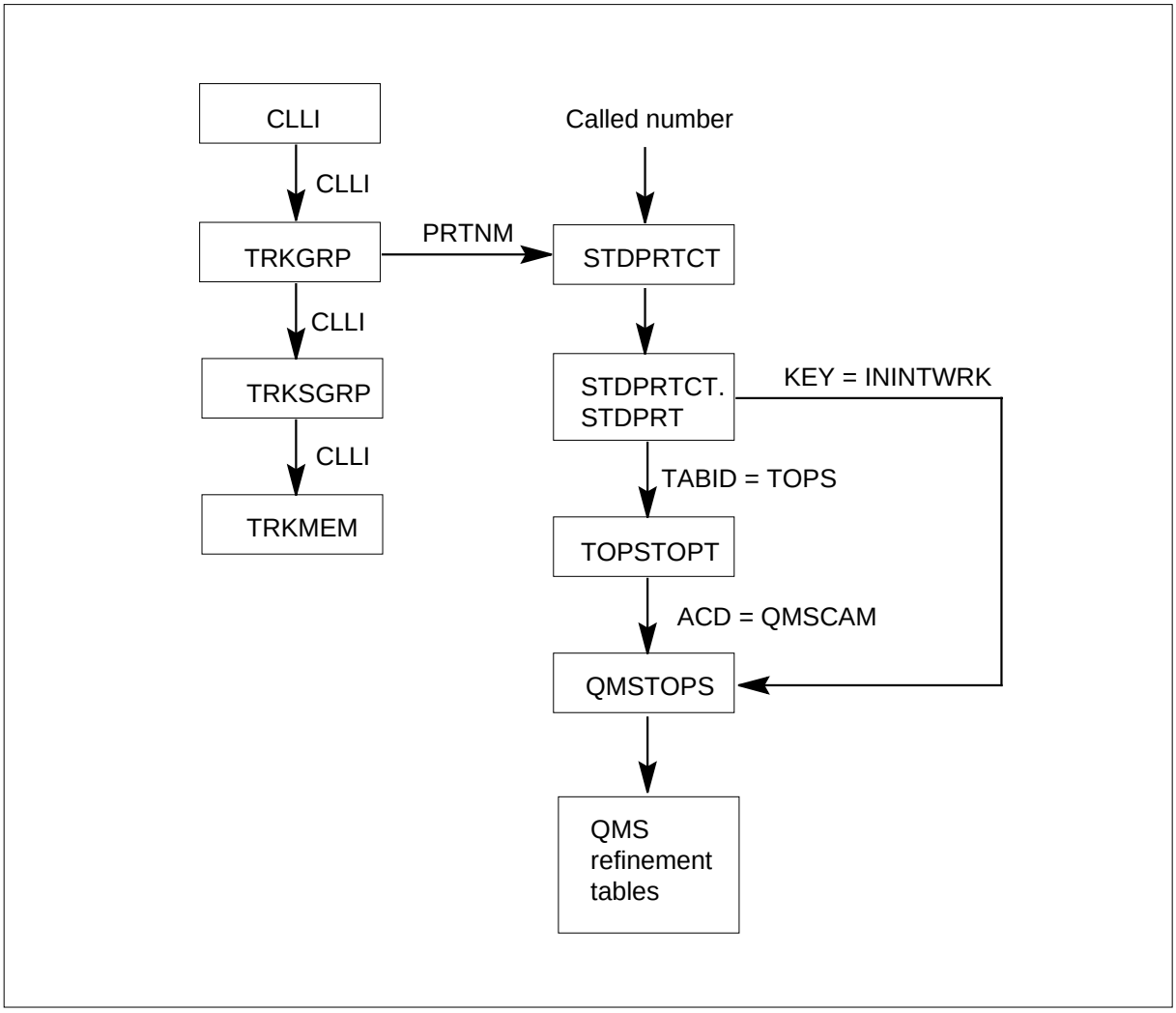

IN Operator Backup (continued)

The following table lists the datafill content used in the flowchart.

Datafill example for IN Operator Backup

Datafill table	Example data
CLLI	SSP1 225 8 IN_INTERWORKING
ISUPTRK	SSP1 NONE NLCA TOPSBC 0 ORIG Y RLT__FAR N N 0 FAR
TRKGRP	SSP1 IT 0 EL0 NCRT 2W NIL MIDL 407 PTOP NSCR 619 000 N N $
TRKSGRP	SSP1 0 DS1SIG C7UP 2W F N UNEQ ACTIVEA Q764 THRL 0 ISUP $ NIL CIC
TRKMEM	SSP1 0 0 DTC 0 5 15
STDPRTCT	PTOP 1 65021
STDPRTCT. STDPRT	0302 0320 T NL 0 TOPS ININTWRK 11 11 NONE
TOPSTOPT	SSP1 QMSCAM CORECAM N N NONE NA N NONE 0 N N Y N
QMSTOPS	ININTWRK IN_INTWRK_CT4Q

Limitations and restrictions

The following limitations and restrictions apply to IN Operator Backup:

- Only QMS routing and queuing is supported.
- IN Interworking calls only route to OPP compatible operators (for example, IWS positions). If the call routes to a non-OPP compatible operator, log TOPS 606, Bad Route for IN Interworking Call, is generated and a Return Error is sent to the SSP.
- IN operator fall back calls are only supported for North America. Only ANSI SS7 ISUP is supported for IN Interworking. ANSI GOSS7 ISUP and ETSI GOSS7 are not supported.
- Only the FlexParameterBlock value is supported as the IP Resource Type.
- Only CONNECT-1129-STYLE IPI is supported for communication between TOPS and the SSP.
- LNP processing is not performed for IN Interworking calls.
- An OLNS query is not done for the calling number.
- No coin or hotel processing is done for billing purposes. The following areas are sent the correct service class of the call (for example, coin, hotel).

However, the call origination type should be used to determine if the TOPS switch used the service class for billing purposes.

— OPP (for operator display)

— PARS

— AMA record

— OC (to send the correct service class to OC Host)

— Service Analysis

— MIS

— QMS routing

Interactions

IN Interworking may interact with various existing TOPS features. The following are valid interactions with IN Interworking calls:

- Branding: The call receives front-end branding by the operator if the INCP parameter FEBrandingRequested is sent to the TOPS switch. However, back-end branding is not done by the TOPS switch. Branding cannot be automated by the TOPS switch.

  The OFCENG parameter TOPS_BRANDING_DISPLAY should be set to DISPLAY_WHEN_NOT_BRANDED to display the branding indicator at the operator terminal.

- Management Information System (MIS): QMS MIS statistics are collected for IN Interworking call queues.

- Music and Announcement in Queue: IN Interworking calls can use the capabilities provided by the music and announcement in queue feature. This is provided through datafill in table CT4QNAMS. Refer to functionality Music and Announcement in Queue, ADVQ0008, for more information.

- Operator Centralization (OC): IN Interworking calls can be routed to operators centralized in an OC network.

- QMS Customer Assistance Service Enhancements (CASE): Operators servicing IN Interworking calls can request assistance from a Customer Service Expert (CSE) operator.

The following capabilities cannot interact with IN Interworking calls. If an IN Interworking call routes incorrectly (for example, calls route to an automated system), a REL with an RO ReturnError component is returned and log TOPS

IN Operator Backup (continued)

606, Bad Route For IN Interworking Call, is generated. The error id returned is resourceTypeNotSupported.

- Automated Alternate Billing Service (AABS): IN Interworking calls do not route to AABS.
- Assistance and In Charge (IC) operators: Operators servicing IN Interworking calls cannot request assistance from assistant or in charge (IC) operators.
- Coin/Hotel: No coin or hotel processing (for example, billing) is done for IN Interworking calls. However, the display at the terminal indicates if the call is a coin or hotel call.
- Directory Assistance (DA): DA is not supported for IN Interworking calls. If the call routes as a DA or intercept service call, a ReturnError is returned and a log is generated.
- Local Number Portability (LNP): LNP processing is not performed for IN Interworking calls. The called party DN and the billing number are not available at the TOPS switch (data is passed in INSP). Therefore, no LNP processing can be done on those numbers. Field LNPCLGAM in table TOPSTOPT should be set to N to prevent LNP processing on the calling numbers if the trunk group is dedicated for IN Interworking calls.
- Mechanized Calling Card Service (MCCS): IN Interworking calls do not route to MCCS. If the call routes to MCCS, a ReturnError is returned and a log is generated.
- Originating Line Number Screening (OLNS): An OLNS query is not done for the calling number since the data is not used by the TOPS switch. Field OLNSQRY in table TOPSTOPT should be set to NONE if the trunk group is dedicated for IN Interworking calls.
- OSSAIN: OSSAIN is not supported for IN Interworking calls. A ReturnError is returned and a log is generated if the call routes to OSSAIN.
- OSSAIN Preprocessing: IN Interworking calls should not be routed to OSSAIN for preprocessing. Otherwise, a ReturnError is returned and a log is generated.

Activation/deactivation by the end user

IN Operator Backup requires no activation or deactivation by the end user.

Billing

All billing information collected by the operator is sent to the SCP. The information is not kept or used by the TOPS switch in anyway. All information is validated by the SCP. Therefore, the TOPS switch does not have any call context information to generate a subscriber billing record. The billing record

generated at the TOPS switch represents the operator involvement in the call (for example. operator work time). The subscriber billing record is generated at the SSP.

The format of the AMA records generated at the TOPS switch is based on office wide datafill in tables CRSMAP and CRSFMT. The format is either Extended Bellcore AMA Format (EBAF) or Call Detail Recording (CDR).

Functionality TOPS/Carrier Interworking, OSB00101, (feature AF7817) creates a new format for AMA records called TOPS Data Record (TDR). It's based on the CDR format. Therefore, a new TDR format is created for IN interworking calls. Refer to that functionality for the format of the TDR for IN operator backup.

If the billing record generated is a TDR and the SSP sends the billing sequence number, then the billing sequence number is included in the TDR. This aids in matching billing records between the TOPS switch and the SSP.

For EBAF, a general assistance record is generated (call code 196, structure code 752). A billing sequence number is not added to the record.

A new AMA option is added for IN operator backup calls. The option is whether to generate an AMA record at the TOPS switch. The AMA record at the TOPS switch may not be needed since the actual subscriber billing record is generated in the IN environment. Also, if the same operating company owns both the SSP switch and the TOPS switch, then record matching between the two switches may not be needed.

The AMA option is datafilled in table TOPAMAOP parameter GENERATE_IN_INTERWORKING_AMA on an office wide basis. Refer to the datafill procedure section.

Station Message Detail Recording

IN Operator Backup does not affect Station Message Detail Recording.

Datafilling office parameters

IN Operator Backup does not affect office parameters.

IN Operator Backup (continued)

The following table shows the office parameters used by IN Operator Backup. For more information about office parameters, refer to *Office Parameters Reference Manual.*

Office parameters used by IN Operator Backup

Table name	Parameter name	Explanation and action
OFCENG	OSSAIN_NUM_RU	The number of OSSAIN recording unit (ORU) extension blocks is increased. An additional extension block is needed for each ANSI ISUP trunk member used for IN operator backup calls. If the trunk group also is used for OSSAIN, then only one extension block (total) is needed per trunk member.
OFCENG	NO_OF_HIS_DATA_BLKS	Additional Xlarge history data blocks (HDB) are needed for IN interworking as follows: • An Xlarge HDB is required for each ANSI ISUP trunk member used for IN Interworking calls. • When the OSSAIN Simultaneous Interactions in functionality OSSAIN 07 Enhancements (OSAN0003) is used, an Xlarge HDB is required for each ANSI ISUP trunk member used for IN operator backup calls. If the trunk group also is used for IN interworking, then only one extension block (total) is needed per trunk member.

Datafill sequence

The following table lists the tables that require datafill to implement IN Operator Backup. The tables are listed in the order in which they are to be datafilled.

Datafill tables required for IN Operator Backup

Table	Purpose of table
STDPRTCT. STDPRT	Standard pretranslator is used to check the called digits for IN operator backup calls and direct the call.
ISUPTRK	Integrated Services Digital Network User Part Trunk provides information for ISUP trunks that interact with the TOPS environment.

Datafill tables required for IN Operator Backup

Table	Purpose of table
TOPSPARM	TOPS Parameters contains office wide parameters for the TOPS system.
TOPAMOP	TOPS Automatic Message Accounting Options contains TOPS office wide parameters for billing purposes.
TOPS	Traffic Operator Position System provides information for operator services.

Datafilling subtable STDPRTCT.STDPRT

The following table shows the datafill specific to IN Operator Backup for subtable STDPRTCT.STDPRT. Only those fields that apply directly to IN Operator Backup are shown. For a description of the other fields, refer to the data schema section of this document.

Datafilling table STDPRTCT.STDPRT

Field	Subfield or refinement	Entry	Explanation and action
			This table is not changed. However, the following datafill is recommended for IN operator backup calls.
PRETRTE		see subfield	Pretranslation route. This field consists of subfield PRERTSEL and refinements TYPCALL, NOPREDIG, EXTRTEID, MINDIGSR, MAXDIGSR, and POS.
	PRERTSEL	T	Pretranslator route selector. Enter T to route to another table.
	TYPCALL	NL	Type of call. Ente NL (nil), which means to use call information from signalling.
	NOPREDIG	0	Number of prefix digits. Enter 0.
	EXTRTEID	see subfields	External route identifier. This field contains subfields TABID and KEY.
	TABID	TOPS	Table name. Enter TOPS to route to the QMS system.
	KEY	ININTWRK	Index. Enter the new call origination index into table QMSTOPS.

IN Operator Backup (continued)

Datafilling table STDPRTCT.STDPRT

Field	Subfield or refinement	Entry	Explanation and action
	MINDIGSR	11	Minimum digits received. Enter 11 minimum digits to wait for before routing.
	MAXDIGSR	11	Maximum digits received. Enter 11 maximum digits to wait for before routing.
	POS	NONE	Position. Enter NONE to not route using table POSITION.

Datafill example for subtable STDPRTCT.STDPRT

The following example shows sample datafill for subtable STDPRTCT.STDPRT.

MAP display example for subtable STDPRTCT.STDPRT

```
FROMDIGS   TODIGS      PRETRTE
-------------------------------------------------------
0302       0320        T NL 0 TOPS  ININTWRK 11 11 NONE
```

Datafilling table ISUPTRK

The following table shows the datafill specific to IN Operator Backup for table ISUPTRK. Only those fields that apply directly to IN Operator Backup are shown. For a description of the other fields, refer to the data schema section of this document.

Datafilling table ISUPTRK

Field	Subfield or refinement	Entry	Explanation and action
ININTWRK		NONE, FAR, FAC	Intelligent network interworking. This new field indicates the type of IN interworking messaging with the SSP on an ANSI SS7 ISUP trunk for IN operator backup calls. The values are as follows: • NONE: IN interworking is not supported for this trunk group. • FAR: ISUP FAR messages are used. • FAC: ISUP FAC messages are used.

Datafill example for table ISUPTRK

The following example shows sample datafill for table ISUPTRK.

MAP display example for table ISUPTRK

```
GRPKEY   CONNTYPE          LCANAME  BILLCD           CALLSRC  ANI2CLI
  RLT          SNTPDRST  DNLKUP  DISPLAY  ININTWRK
-------------------------------------------------------------------
SSP1      NONE              NLCA    TOPSBC 0          ORIG     Y
  RLT_FAR       N        N       0        FAR
SSP2      NONE              NLCA    TOPSBC 0          ORIG     Y
  RLT_FAR       N        N       0        FAC
```

Datafilling table TOPSPARM

The following table shows the datafill specific to IN Operator Backup for table TOPSPARM. Only those parameters that apply directly to IN Operator Backup are shown. For a description of the other parameters, refer to the data schema section of this document.

Datafilling table TOPSPARM

Field PARMNAME	Field PARMVAL	Explanation and action
IN_INTERWORKING_RESPONSE_TIMER	1 to 60 (seconds)	This parameter indicates the amount of time the TOPS switch waits for a message from the SSP after sending a response to a previous Invoke. The default value is 5. The timer is started when the TOPS switch sends an ISUP FAR or FAC message to the SSP. When the timer expires, the following occurs: • The ISUP connection is released. • The operator terminal is notified of the release. • New log TOPS 608, IN Interworking Response Timer Popped, is generated.

Datafill example for table TOPSPARM

The following example shows sample datafill for table TOPSPARM.

IN Operator Backup (continued)

MAP display example for table TOPSPARM

```
PARMNAME                                        PARMVAL
-------------------------------------------------------
IN_INTERWORKING_RESPONSE_TIMER                  5
```

Datafilling table TOPAMAOP

The following table shows the datafill specific to IN Operator Backup for table TOPAMAOP. Only those parameters that apply directly to IN Operator Backup are shown. For a description of the other parameters, refer to the data schema section of this document.

Datafilling table TOPAMAOP

Field AMAOPT	Field OPTINFO	Explanation and action
GENERATE_IN_INTERWORKING_AMA	Y or N	This parameter indicates whether to generate billing records for IN operator backup calls. Enter Y to generate the records. Or, enter N to not generate the records. The default value is Y. All billing information collected by the operator is sent to the SCP. Therefore, the TOPS switch does not have any call context information to generate a subscriber billing record. The billing record generated at the TOPS switch represents the operator involvement in the call (for example. operator work time). The subscriber billing record is generated at the SSP. Therefore, the AMA record at the TOPS switch may not be needed since the actual subscriber billing record is generated at the SSP. Also, if the same operating company owns both the SSP switch and the TOPS switch, then record matching between the two switches may not be needed.

Datafill example for table TOPAMAOP

The following example shows sample datafill for table TOPAMAOP.

MAP display example for table TOPAMAOP

```
AMAOPT                                          OPTINFO
------------------------------------------------------
GENERATE_IN_INTERWORKING_AMA                     Y
```

Datafilling table TOPS

The following table shows the datafill specific to IN Operator Backup for table TOPS. Only those fields that apply directly to IN Operator Backup are shown. For a description of the other fields, refer to the data schema section of this document.

Datafilling table TOPS

Field	Subfield or refinement	Entry	Explanation and action
CO		ININTWRK	Call origination. New default value ININTWRK is added for IN operator backup calls. This value also is added as a default tuple to tables QMSTOPS and TOPSAMA for IN operator backup. And, the new call origination may be datafilled in any of the other TOPS tables that use call origination: AMASRVID, and TDBNORM. The call origination can also be added to tables DABILL, TOPSOIC, and ADACCOPT, although Directory Assistance (DA) is not supported for IN operator backup calls.

Datafill example for table TOPS

The following example shows sample datafill for table TOPS.

MAP display example for table TOPS

```
CO         DISPLAY   NOAMA    POSTYPE     SERVTYP     HOLDREQ
_____________________________________________________________
ININTWRK   S          N        GEN         TASERV      N
```

Translation verification tools

IN Operator Backup does not use translation verification tools.

IN Operator Backup (end)

SERVORD

IN Operator Backup does not use SERVORD.

OLNS Foreign Language

Ordering codes

Functional group ordering code: ENSV0101

Functionality ordering code: ENSV0104

Release applicability

TOPS11 and up

OLNS Foreign Language was introduced in TOPS11.

Prerequisites

To operate, OLNS Foreign Language has the following prerequisites:

- Base Generic, BAS00003
- Operator Services Basic, OSB00101, and table TOPSFTR parameter TOPS_ON_OFF_SWITCH = Y
- Table TOPSFTR parameter OLNS_FOREIGN_LANGUAGE = Y
- TOPS OLNS Interface, ABS00101 and table TOPSFTR parameter ORIGINATING_LINE_NUMBER_SCREENING = Y

Description

Early in the TOPS system call processing, an originating line number screening (OLNS) query is made for information about the calling party. The OLNS response includes a foreign language parameter with the calling number. This feature uses the parameter to set the calling party language. Then, the language is sent to other nodes in the network. The primary advantages of this feature are as follows:

- The subscriber's preferred language is known early in call processing and automated nodes do not need to prompt for a preferred language.
- Calls can be routed to an operator speaking the calling party's preferred language. This ability saves operator keying time and customer waiting time.
- Automated announcements can be made in the preferred language of the subscriber. The subscriber is able to understand and follow the announcements instead of timing out to an operator for assistance. Note, subscriber interaction with an automated node depends on how the node uses this feature.

This feature does not set the called party language.

OLNS Foreign Language (continued)

This functionality is provided by the following feature:

Feature number	Feature name
AF7728	OLNS Foreign Language

Operation

Before this feature, the calling and called party languages were set by the following:

- Operator keying
- Selection by an automated system
- Incoming integrated services digital network user part (ISUP) trunks by the initial address message (IAM)
- Release Link Trunking (RLT)
- IN Operator Backup(functionality IN Fall Back, ENSV0106)

The calling party language is sent by the DMS switch through existing fields only in the protocols to the nodes as follows:

- automated alternate billing system (AABS) protocol to AABS interactive voice system (IVS) and AABS voice service node (VSN)
- standard directory assistance (DA) protocol to automated directory assistance system plus (ADAS+), IVS DA, and intelligent services node (ISN) DA
- open automated protocol (OAP) to operator services system advance intelligent network (OSSAIN) service node (SN)
- American standard code for information interchange (ASCII) protocol to TOPS MP and TOPS IV positions.
- open position protocol (OPP) to OPP compatible positions

Note: Although the calling party language is sent to the above listed nodes, the nodes may not use the foreign language indicator. Check with the node supplier for further details.

The above protocols are not changed.

The above supported protocols and nodes are shown in the following figure.

OLNS Foreign Language (continued)

Supported protocols and nodes

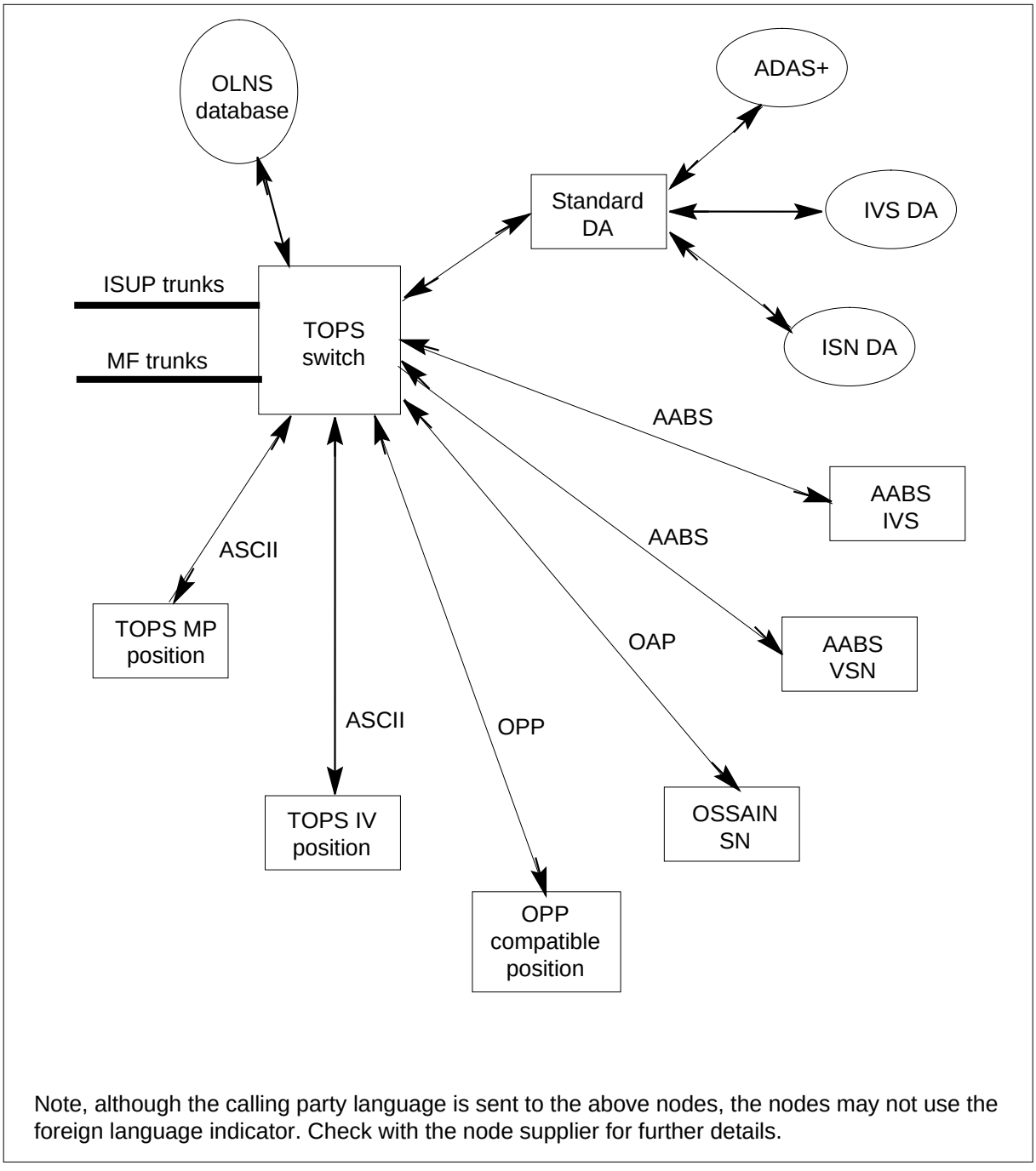

Note, although the calling party language is sent to the above nodes, the nodes may not use the foreign language indicator. Check with the node supplier for further details.

OLNS Foreign Language (continued)

The following systems are not supported to receive the calling party language

- automted coin toll system (ACTS)
- personal audio response system (PARS)
- ADAS
- International Business Machine (IBM) DA

Datafill

New table OLNSLANG defines languages derived from the OLNS query. These languages must be previously defined in table TOPSLANG. Refer to the datafill procedure section for more details.

Since the calling language is determined early in translations, the language can be used for call refinement in the queue management system (QMS) to route to an operator that speaks the language. QMS table CT4QLANG refines by language.

In addition to the above method of deriving language specific queues, there are two other methods as follow:

- incoming trunk group - An incoming trunk group or calling digits can be dedicated to a language. The calls can be refined by table CT4QORIG.
- called digits - A called number can be dedicated to a language, for example, a 1-800-SPANISH access code. The calls can be refined by table CT4QCLD.

Since there are three possible criteria of creating language specific queues, there can be a conflict between the criteria. For example, one path indicates FRENCH while the other path indicates SPANISH. Therefore, refinement must be set up to prevent this problem. First, decide on a precedent criteria. Then, check the relationship of the key tables. For example, if CT4QLANG should have precedence, then consider the other key tables as follows:

- If CT4QLANG is late in ordering in tables CQORDERA/CQORDERB, route all calls with possible language variants through CT4QLANG.
- If CT4QLANG is early in ordering, do not route the output of CT4QLANG to CT4QORIG or CT4QCLD.

OLNS Foreign Language (continued)

Translations table flow

The OLNS Foreign Language translations tables are described in the following list:

- Table TOPSLANG defines languages used by the TOPS system.
- Table OLNSLANG defines languages received from an OLNS query as valid for use by the system.

The OLNS Foreign Language translation process is shown in the flowchart that follows.

Table flow for OLNS Foreign Language

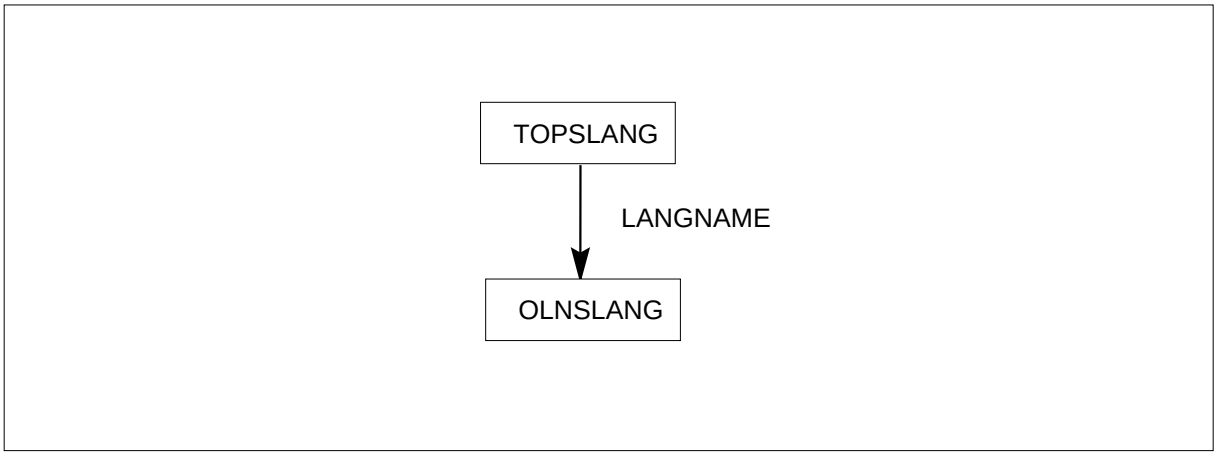

The following table lists the datafill content used in the flowchart.

Datafill example for OLNS Foreign Language

Datafill table	Example data
TOPSLANG	19 FRE Y 2 N
OLNSLANG	FRENCH FRE

Limitations and restrictions

The following limitations and restrictions apply to OLNS Foreign Language:

- If the caller does not want the preferred language associated with a calling number for a specific call, the caller must tell the operator to change the language, or select a new language if an automated node prompts for it.
- When a call comes to an operator through a special language CT4Q without a calling party language display, the operator must enter the language of the caller in order to set the calling party language.

OLNS Foreign Language (continued)

Interactions

The following paragraphs describe the interactions between OLNS Foreign Language and other functionalities.

There are various methods to set the calling party language for a call. As the call proceeds through TOPS call processing, each new calling party language replaces any previous calling party language.

In ISUP signalled calls, the Calling Party's Category (CPC) in an IAM is currently processed before the OLNS query is made. Hence, at OLNS query, the OLNS foreign language replaces a calling party language set by IAM.

When an RLT call is re-originated to the TOPS switch, it contains the calling party language in the Context Block. When the call comes into the TOPS switch, an OLNS response currently is processed before the RLT Context Block. This calling party language in the Context Block replaces the one set by the OLNS query.

Functionality IN Operator Backup, ENSV0106, uses intelligent network (IN) Control Protocol (INCP) to communicate between a signalling control point (SCP) and the TOPS switch. When a call comes in from SCP to the TOPS switch, it can also contain the language selected by the caller. Currently no OLNS queries are launched with IN Fallback, hence IN Fallback has no interaction with this feature.

This feature does not interact with the bilingual concept in DA calls which allows for a call to have either a primary or a secondary language on a trunk basis based on the datafill in DATRKOPT.

Activation/deactivation by the end user

OLNS Foreign Language requires no activation or deactivation by the end user.

Billing

OLNS Foreign Language does not affect billing.

Station Message Detail Recording

OLNS Foreign Language does not affect Station Message Detail Recording.

Datafilling office parameters

OLNS Foreign Language does not affect office parameters.

OLNS Foreign Language (continued)

Datafill sequence

The following table lists the tables that require datafill to implement OLNS Foreign Language. The tables are listed in the order in which they are to be datafilled.

Datafill tables required for OLNS Foreign Language

Table	Purpose of table
TOPSLANG	TOPS language defines languages used by the TOPS system.
OLNSLANG	OLNS language defines languages received from an OLNS query as valid for use by the system.

Datafilling table TOPSLANG

The following table shows the datafill specific to OLNS Foreign Language for table TOPSLANG. Only those fields that apply directly to OLNS Foreign Language are shown. For a description of the other fields, refer to the data schema section of this document.

Table TOPSLANG must be datafilled before table OLNSLANG.

Datafilling table TOPSLANG

Field	Subfield or refinement	Entry	Explanation and action
			The only change to this table is the new error message given below.

Datafill example for table TOPSLANG

The following example shows sample datafill for table TOPSLANG.

OLNS Foreign Language (continued)

MAP display example for table TOPSLANG

```
LANGDIGT   LANGNAME  AUTOLANG  ISUPLANG
-------------------------------------------------------
2          SPA       N         N
3          JAP       N         N
17         ENG       Y 1       N
19         FRE       Y 2       N
26         SPA       Y 3       N
27         MAN       Y 4       N
29         ITA       Y 5       N
36         MOP       Y 6       N
37         MOE       Y 7       N
39         MOF       Y 8       N
99         TAI       N         N
```

Error messages for table TOPSLANG

The following error messages apply to table TOPSLANG.

Error messages for table TOPSLANG

Error message	Explanation and action
LANGUAGE MUST FIRST BE DELETED FROM TABLE OLNSLANG TUPLE/TUPLES.	A tuple referenced by table OLNSLANG cannot be deleted without first deleting the references in table OLNSLANG. If an attempt is made that does not meet this requirement, the entry is blocked.

Datafilling table OLNSLANG

OLNS language is a new table that defines languages received from an OLNS query as valid for use by the system. The table maps the language to a language name used by table TOPSLANG. After mapping the language, it is passed through different protocols like AABS, DA, OAP, and OPP.

OLNS Foreign Language (continued)

Table TOPSLANG must be datafilled before table OLNSLANG.

Datafilling table OLNSLANG

Field	Subfield or refinement	Entry	Explanation and action
OLNSLANG		DEFAULT, AMHARIC, ARABIC, ARMENIAN, BENGALI CAJUN, CANTONESE, CROATIAN, CZECH, DANISH, DRU, DUTCH, FINNISH, FORMOSAN, FRENCH, FRENCH_ CREOLE, GERMAN, GREEK, GUJARATHI, HEBREW, HINDI, HUNGARIAN, ILOCANO, ITALIAN, JAPANESE, KOREAN,. LITHUANIAN, MALAYALAM, MANDARIN, MIAO, MON_KHMER, NAVAHO, NORWEGIAN, PANJABI, PENN_DUTCH, PERSIAN, POLISH, PORTUGUESE,	Originating line number screening language. This field is the key field. Enter a language that is returned by the OLNS database. The valid entries are shown. The following are comments on some of the entries. • DEFAULT -used if the OLNS response does not contain a foreign language parameter. • HINDI - Urdu • MIAO - Hmong • MON-KHMER - Cambodian • PENN_DUTCH - Pennsylvania dutch • THAI - Laotian If table OLNSLANG does not contain an OLNS foreign language, it is not used. Therefore, the calling language is not changed. All languages returned by OLNS may not be supported, so are not defined in table TOPSLANG. Therefore , an alternate language may be suitable. For example, if CZECH is not supported, FRENCH may be appropriate.

OLNS Foreign Language (continued)

Datafilling table OLNSLANG

Field	Subfield or refinement	Entry	Explanation and action
OLNSLANG (continued)		RUMANIAN, RUSSIAN, SAMOAN, SERBO_CROA, SLOVAK, SPANISH, SWEDISH, SYRIAC, TAGALOG. THAI, TIAN, TURKISH, UKRAINIAN, VIETNAMESE, YIDDISH	
LANGNAME		name from table TOPSLANG	Language name. Enter an language name that is sent in the different protocols to notify the system.

Datafill example for table OLNSLANG

The following example shows sample datafill for table OLNSLANG.

MAP display example for table OLNSLANG

```
OLNSLANG        LANGNAME
--------------------------------------------------------
DEFAULT         ENG
SPANISH         SPA
FRENCH          FRE
GERMAN          GER
TAGALOG         ENG
ITALIAN         ITA
MANDARIN        MAN
CZECH           FRE
```

The above datafill shows that TAGALOG and CZECH are not supported, so alternate languages ENGLISH and FRENCH are used.

The LANGNAME can be used for QMS refinement by language in table CT4QLANG as follows:

MAP display example for table CT4QLANG

```
OLDCT4Q    LANGCRIT    NEWCT4Q
--------------------------------------------------------
0_MINUS    FRE         0_MINUS_FRE
```

The above example shows that operator handled calls from French subscribers are routed to a call queue staffed by French speaking operators.

Translation verification tools

OLNS Foreign Language does not use translation verification tools.

SERVORD

OLNS Foreign Language does not use SERVORD.

OLNS Support of No Automation

Ordering codes

Functional group ordering code: ENSV0101

Functionality ordering code: ENSV0105

Release applicability

TOPS11 and up

OLNS Support of No Automation was introduced in TOPS11.

Prerequisites

To operate, OLNS Support of No Automation has the following prerequisites:

- Base Generic, BAS00003
- TOPS OLNS Interface, ABS00101 and table TOPSFTR parameter ORIGINATING_LINE_NUMBER_SCREENING = Y
- Operator Services Basic, OSB00001, and table TOPSFTR parameter TOPS_ON_OFF_SWITCH = Y
- Table TOPSFTR parameter OLNS_NO_AUTOMATION = Y

Description

This feature allows a subscriber to request service from a TOPS operator instead of a TOPS automated system. This preference is stored in the originating line number screening (OLNS) line information database (LIDB).

The feature TOPS MP Support for No Automation (50096306) provides support on the MP position for the DMS switch feature OLNS Support of No Automation (AF7727). Feature 50096306 also removes the capability of operators to override a block command from the DMS switch by disabling the Automation/No Automation toggle key.

The functionality OLNS Support of No Automation is provided by the following features:

Feature number	Feature name
AF7727	OLNS Support of No Automation
50096306	TOPS MP Support for No Automation

OLNS Support of No Automation (continued)

Operation

The call flow is as follows:

1. When the call arrives at the TOPS switch, perform an OLNS query..
2. Queue the call and route to a final call queue as normal.
3. If the queue is for a TOPS automated system, block the call. The TOPS automated systems are as follows:
   - Automated Alternate Billing Service (AABS)
   - Operator Services System Advanced Intelligent Network (OSSAIN) function that is an automated system (not an operator)
   - Mechanized Calling Card Service (MCCS)
   - Automated Directory Assistance Service (ADAS)
   - ADAS Plus
   - IBM directory assistance (DA) and standard DA release to audio
   - Automated Coin Toll Service (ACTS)
4. For a No Automation call, re-route to a TOPS operator.

The No Automation functionality is supported for both the QMS and ACD queuing system. The interactions between TOPS queuing and the No Automation feature are described below.

- Routing ACD calls

  No Automation ACD calls are prevented from routing to an automated system (AABS, MCCS, ACTS, ADAS, and ADASPLUS) during call setup. These calls are assigned an ACD queue and sent directly a live Operator.

- Routing Non-OSSAIN QMS calls

  No Automation QMS calls which are non-OSSAIN are prevented from routing to an automated system (AABS, MCCS, ACTS, ADAS, and ADASPLUS) during call setup. These calls are assigned a CT4Q and sent directly to a live Operator.

  For No Automation calls that are specified for QMS, existing QMS refinement criteria are used to refine the call. The resulting final QMS Call Type For Queueing (CT4Q) is either a TOPS operator CT4Q or an OSSAIN CT4Q.

- Routing OSSAIN calls

Existing QMS and OSSAIN datafill determines the OSSAIN function for the call. However, if this function is associated with an automated service, it is

OLNS Support of No Automation (continued)

necessary to prevent routing to an automated system for No Automation calls. Table OAFUNDEF contains the following function types that are affected by this functionality:

- Function type = TOPSAUTO. No Automation calls which are mapped to the TOPS Automated system functions are transferred to a live Operator using the CT4Q datafilled in the field OPRONF.
- Function type = SN. New field ISAUTOFN allows the reassignment of the OSSAIN function.
- Notify open position protocol (OPP) compatible and TOPS MP positions of the No Automation call. TOPS 04 and Auxiliary Operator Services System (AOSS) positions are not notified.
- The operator provides full handling of the call. Or, during heavy work volume, the operator can consult with the subscriber, override the block, and transfer the call to an automated system. Then, the call follows normal, instead of No Automation, processing. The block override is supported only for OPP compatible positions. Therefore, TOPS MP, AOSS, and O4 positions cannot override the block.

  If block override is not used, the operator is blocked from transferring the call to an automated system.

The request for No Automation in the database is divided into the following reasons called treatment indicators:

- Operator handling at customer request (treatment indicator = 4)
- Handicapped (treatment indicator = 5)
- Deaf (treatment indicator = 6)

The treatment indicator indexes table OLNSTARS or OLNSDARS as field TRMT to obtain the screen code and operator display indexes.

The treatment indicator is reported in the AMA record. This is an existing functionality of the AMA record. If the treatment indicator cannot be received from the OLNS database, as with OLNS failure, the call proceeds as a normal TOPS call instead of a No Automation call.

Operator branding is not affected.

Tables OLNSTARS and OLNSDARS do not require datafill. Operator displays and screen codes are automatically controlled by the system.

Logs and OMs

No logs or operational measurements (OMs) are used by this feature.

OLNS Support of No Automation (continued)

Translations table flow

OLNS Support of No Automation has no translations table flow.

Limitations and restrictions

The following limitations and restrictions apply to OLNS Support of No Automation:

- Manufactured Discontinued products (TOPS IV and MPs) are not enhanced to completely support this feature.
- OLNS Treatment indicator values 4 (Operator handling at customer request), 5 (handicapped), and 6 (Deaf) are all handled as just No Automation calls without any distinction. These calls can only be distinguished in the AMA records since the treatment value is reported.
- The operator overriding capability (using a keying action) for transfer of No Automation calls may only be provided on OPP compatible positions and is not provided on TOPS MPs or TOPS IV positions.
- The No Automation screen information is provided only on OPP compatible and MP positions and is not provided for TOPS IV positions.
- No Automation blocking and unblocking for DA release to ARU is provided only by the position and not the DMS switch.

Interactions

The following interactions apply to OPP compatible and TOPS MP positions only.

AABS

Prior to arrival at the TOPS Operator position at call origination, No Automation calls are blocked from being routed to AABS. After the call arrives at the TOPS position, Handoff to AABS can only occur if the TOPS operator performs an overriding action to unblock the No Automation status of the call.

MCCS

No Automation calls are blocked from being routed to MCCS at call origination. This blocking can be overridden only by a TOPS Operator if transfer to MCCS is required to complete the call.

MCCS sequence calls are not supported for No Automation calls. Call sequencing can only occur if an OSSAIN trigger routes the call to the Operator who manually outpulses the call to a new directory number (DN)

OLNS Support of No Automation (continued)

DA/ADAS /ADASPLUS

Blocking No Automation calls from being released to the Audio Response Unit (ARU) to provide listings, is implemented at the position. OPP compatible positions can implement the ability for the position to block and unblock release to ARU. This feature is not implemented on TOPS MP and TOPS IV positions. Therefore for No Automation calls, release to ARU is unblocked for all positions except on an OPP compatible position that supports the ability to block and unblock Operator Release to ARU.

At call origination (prior to arrival at the TOPS Operation position) No Automation calls are blocked from being routed ADAS and ADASPLUS services. The TOPS Operator verbally completes the listing, or at the caller's request, overrides blocking on the automated systems and transfers the call to be completed by the automated system if the position supports overriding of blocking to release the listings to the ARU.

Branding

No change is made on the existing Branding service, since table BRANDANN and BRANDOPT can be datafill to provide only Operator Front End Branding. Operating Companies that don't need Branding can turn Branding off through datafill in table BRANDOPT.

PARS

No change is made on the existing PARS system. Operating Companies that prefer not to use the PARS system can turn PARS off using datafill in table PARSMBR.

OSSAIN

Calls can be transferred or routed to OSSAIN at call origination (prior to arrival at the operator), when the operator transfers the call to OSSAIN, and when an OSSAIN trigger is generated. OSSAIN supports both automated and non-automated services. No Automation calls can only be routed to OSSAIN functions that provide non-automated services.

At call origination, No Automation calls are blocked from OSSAIN service functions that provide automated services and the calls are handled by a TOPS operator.

Transfer of No Automation calls to OSSAIN service by a TOPS operator can only be achieved if the operator performs an overriding action to unblock the No Automation status of the call.

When an OSSAIN Trigger is generated for a No Automated call, the call is routed to the TOPS operator if the function assigned to the call is an automated function; otherwise, the call is routed to OSSAIN.

ACTS

No Automation calls are blocked from the ACTS system. Presently, there is no functionality in the TOPS system that permits the transfer from the operator position to ACTS for call completion.

When a coin call is recalled, the call can either route to the ACTS service or to a TOPS operator. No Automation calls are blocked from being routed to ACTS during a recall.

Activation/deactivation by the end user

OLNS Support of No Automation requires no activation or deactivation by the end user.

Billing

AMA modules are not changed.

The subscriber's preferred treatment indicator is reported in the AMA record, Structure 0772 Table 675.

Station Message Detail Recording

OLNS Support of No Automation does not affect Station Message Detail Recording.

Datafilling office parameters

OLNS Support of No Automation does not affect office parameters.

Datafill sequence

The following table lists the tables that require datafill to implement OLNS Support of No Automation. The tables are listed in the order in which they are to be datafilled.

Datafill tables required for OLNS Support of No Automation

Table	Purpose of table
OAFUNDEF	OSSAIN Function Definition specifies functions for OSSAIN.

OLNS Support of No Automation (continued)

Datafilling table OAFUNDEF

The following table shows the datafill specific to OLNS Support of No Automation for table OAFUNDEF. Only those fields that apply directly to OLNS Support of No Automation are shown. For a description of the other fields, refer to the data schema section of this document.

Datafilling table OAFUNDEF

Field	Subfield or refinement	Entry	Explanation and action
			New subfield ISAUTOSN_AREA is added for SNs.
FUNCAREA		see subfield FUNCTYPE	Function area. This field consists of subfield FUNCTYPE and refinements.
	FUNCTYPE	SN, TOPSOPER, TOPSAUTO	Function type. The function provider. Following are the values: • SN - service node. Datafill refinements ORIGSERV, TRIGGER_AREA, SBTIMER_AREA, ISAUTOSN_AREA, and CAMHERE. • TOPSAUTO - existing TOPS automated system. Datafill refinements AUTOSYS and OPRONFL. • TOPSOPER - a live operator. Datafill refinement OPRCT4Q. Note, if a function has FUNCTYPE = TOPSOPER and that FUNCNAME is datafilled in field NEWFUNC, then FUNCTYPE cannot be changed to SN or TOPSAUTO.
	ISAUTOFN_AREA	see subfields	Is auto function area. This new field consists of subfield ISAUTOFN.

OLNS Support of No Automation (continued)

Datafilling table OAFUNDEF

Field	Subfield or refinement	Entry	Explanation and action
	ISAUTOFN	Y or N	Is auto function. Indicate if this function should be reassigned for a no automation service call. Enter Y for reassignment and datafill subfield NEWFUNC. Otherwise, enter N for no reassignment. The default is N. Originating line number service (OLNS) indicates if the subscriber has requested service from an operator instead of an automated system.
	NEWFUNC	name from table OAFUNDEF	New function. Datafill this field if field ISAUTOFN = Y. Enter a TOPS operator function defined in table OAFUNDEF.

Datafill example for table OAFUNDEF

The following example shows sample datafill for table OAFUNDEF.

MAP display example for table OAFUNDEF

```
FUNCID  FUNCNAME         FUNCAREA
------------------------------------------------------------------------
0       0_MINUS_OPER     TOPSOPER  0_MINUS
1       1_PLUS_OPER      TOPSOPER  1_PLUS
2       TOPS_AABS        TOPSAUTO  AABS  0_PLUS
3       YELLOW_PAGES     SN  DASERV N N Y EBAS_DA_AGENT_F Y CQ3
4       OSSAIN_DA         SN  DASERV  N  N N Y CQ4
5       EBAS_DA_AGENT_F   TOPSOPER  EBAS_DA_NODE_TO_OPR
```

The datafill example above indicates the following:

- Tuples 0, 1, and 5 belong to the TOPSOPER functions and are not affected by No Automation calls.
- Tuple 2 belongs to the TOPSAUTO function and the data in the field OPRONFL is used to route the call to a live operator.
- Tuple 3 belongs to the OSSAIN SN function and field ISAUTOFN is Y. The SN function is re-assigned by field NEWFUNC to a TOPS operator function for No Automation calls.
- Tuple 4 belongs to the OSSAIN SN function and the field ISAUTOFN is N. No new function is assigned. Therefore all calls, including No

OLNS Support of No Automation (end)

Automation calls that route to the CT4Q mapped to this function, are serviced by the function.

Error messages for table OAFUNDEF

The following error messages apply to table OAFUNDEF.

Error messages for table OAFUNDEF

Error message	Explanation and action
`Field NEWFUNC must be datafilled with a function from table OAFUNDEF that has a functype value of TOPSOPER.`	This error message is displayed if an attempt is made to enter a value in field NEWFUNC that does not meet the following requirements:: • A function must already be present in table OAFUNDEF before it can be assigned to NEWFUNC. • Only functions of type TOPSOPER can be assigned to NEWFUNC.
`This function name is in use in NEWFUNC field of table OAFUNDEF.` `You must remove all references to this function name before you can delete it.`	A tuple cannot be deleted if its function name is assigned to a NEWFUNC field. If an attempt is made to delete the tuple this message is displayed.
`This function is datafilled in table OAFUNDEF.` `Since field FUNCTYPE is being changed from TOPSOPER, you must remove any references to this function from the NEWFUNC field in table OAFUNDEF.`	TOPS operator functions that are assigned as NEWFUNC cannot be changed to an OSSAIN SN or TOPS Automated System type function. If an attempt is made to change the function, this message is displayed.

Translation verification tools

OLNS Support of No Automation does not use translation verification tools.

SERVORD

OLNS Support of No Automation does not use SERVORD.

Seconds Based Announcements

Ordering codes

Functional group ordering code: ENSV0101

Functionality ordering code: ENSV0103

Release applicability

TOPS12 and up

TOPS12 introduced Seconds Based Announcements.

Requirements

To operate, Seconds Based Announcements requires the functional groups that follow:

- Base Generic, BAS00003
- Operator Services Basic, OSB00101, and table TOPSFTR parameter TOPS_ON_OFF_SWITCH = Y
- Automatic Coin Toll Service, ENSV0103
- External RTRS Interface, ENSV0103, and table TOPSFTR parameter EXTERNAL_RATING = Y
- Table TOPSFTR parameter SECONDS_BASED_ANNOUNCEMENTS = Y

Description

This functionality provides time duration in seconds granularity as follows:

- A certain type of Automatic coin toll service (ACTS) announcement
- ACTS Time and Charges calls
- Hotel billing information center (HOBIC) devices

This functionality consists of the feature as follows:

Feature number	Feature name
59006873	Seconds Based Announcements for External Real-Time Rated Calls

Operation

This section provides details on the functionality.

Seconds Based Announcements (continued)

ACTS announcements

Before this functionality, ACTS provided announcements in minutes granularity for external real time rating of post paid calls in an overtime period from coin phones. The external real time rater could rate calls in seconds granularity, but there was never a need to play the announcements in seconds granularity.

An example coin call is shown below where the caller is charged for one minute of overtime.

Example coin call

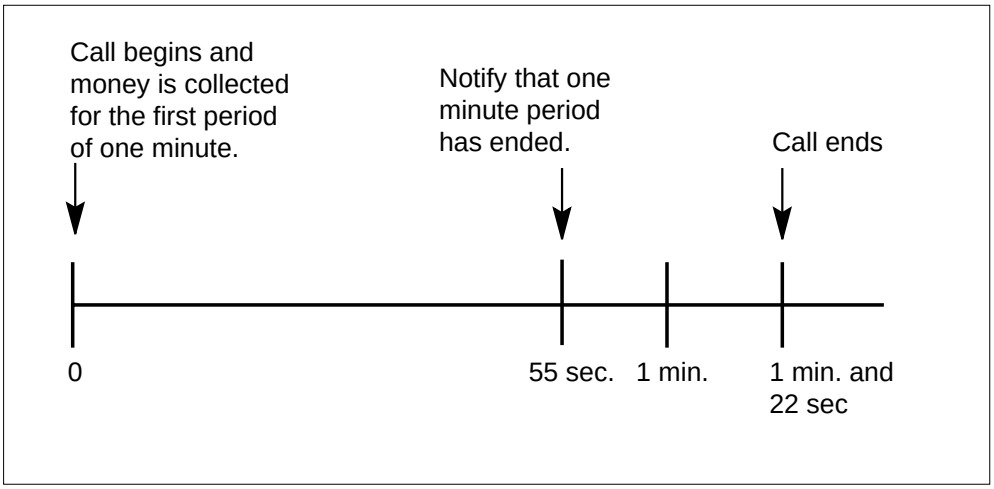

With this functionality, the above call type announcement can be played in seconds granularity. That is, the call is an ACTS call with external real time rating that is post paid, in an overtime period, and from a coin phone.

For the example coin call above, the ACTS announcement indicates 22 seconds of overtime. However, tariffing controls the actual rated time that is billed, so the time can be either seconds or minutes granularity.

If ACTS is not available to quote information to the subscriber, the duration time on the operator position displays the billing period in minutes and seconds for coin calls.

Internal real time rating does not change and continues to play time duration in minutes granularity.

ACTS Time and Charge calls

Before this functionality, ACTS provided time and charge quotes for Time and Charges in minutes granularity for calls from a coin phone that use the external

real time rater. With this functionality, these calls use seconds granularity. If ACTS is not available to quote information to the subscriber, the duration time on the operator position displays the billing period in minutes and seconds.

Internal real time rating does not change and continues to use minutes granularity.

HOBIC devices

HOBIC devices, including internet protocol (IP), now reflect call duration in seconds granularity when enabled as follows:

- Set table TOPSPARM parameter SEND_SECONDS_TO_HOBIC to Y.
- Update downstream equipment that works with HOBIC information to handle the new seconds value.
- This software optionality code (SOC) is on.

The HOBIC device does not require an update.

An example output follows.

HOBIC example output

```
0004  519–320–1234  <HDSO  201–220–1234  01041446  1:20  100  050
          555
0005  519–320–1234  <HDSO  201–220–1234  01041451  0:25  050  025
          555
                                                      ↑
                                                Minutes : seconds
```

IWS

The “stopwatch" capability on the operator position displays the time in minutes and seconds and is only applicable to Intelligent Workstation (IWS) positions.

Hardware

To receive the new phrases “second" and “seconds" as part of the announcement reflecting sub-minute increments, the Operating Company must request these recordings from the Nortel Networks Audio Technical Group. Without them, there is no announcement, only silence, and logs DFIL 116, TOPS 102, and TOPS 104 are produced to indicate a datafill error. These recordings are two new ACTS announcements and follow the same naming

Seconds Based Announcements (continued)

convention as other acts announcements. For example, “Minutes" are provisioned as ACTS_MINUTES, “Seconds" are ACTS_SECONDS, and so forth.

SOC

This functionality is controlled by SOC ENSV0103. For North America, this feature is fully activated by this option.

For a global load, the conditions apply as follows:

- With the table TOPSPARM parameter SEND_SECONDS_TO_HOBIC set to Y, seconds are delivered to the HOBIC device. To receive seconds at the HOBIC device, both the parameter and the SOC option must be set appropriately.
- Time and Charge information is accurate in seconds increments for recorded announcements and operator position display.
- Global loads do not support coin signalling. ACTS announcement functionality is not available and therefore does not support Seconds-Based Announcements even with this option set to ON.

Translations table flow

Seconds Based Announcements does not have a table flow.

Limitations and restrictions

The limitations and restrictions that follow apply to Seconds Based Announcements:

Seconds based announcements are only supported in the North American market as coin signalling is not supported for the Global market. However, HOBIC information for the global market displays call duration in seconds granularity. Also, Time & Charges reports call duration in seconds granularity for the global market.

If the SOC for this feature is ON and phrases “second" and “seconds" are not datafilled through DRAMREC, logs DFIL 116, TOPS 102, and TOPS104 are produced to indicate a datafill error. Also, the call is terminated when the announcement would have normally played.

Interactions

Seconds Based Announcements does not interact with other functionalities.

Seconds Based Announcements (continued)

Activation and deactivation by the user

Seconds Based Announcements does not require activation or deactivation by the user.

Billing

AMA records support minutes and seconds increments already. There are no new or changed billing formats as a result of this feature.

AMA billing records containing Modules 60 and 36 (the charges module), and TOPS Detail Recording (TDR) accurately reflect the charges for the call based on second increments. This capability is provided by off-board vendor equipment (External Real-Time Rater).

Station Message Detail Recording

Seconds Based Announcements does not require Station Message Detail Recording.

Office parameters used by Seconds Based Announcements

Seconds Based Announcements does not generate office parameters.

Datafill sequence

The table that follows lists the tables that require datafill to put Seconds Based Announcements into operation. You must enter data into the tables in this order.

Datafill requirements for Seconds Based Announcements

Table	Purpose of table
TOPSPARM	TOPS Parameters contains office-wide parameters for the TOPS office.

Seconds Based Announcements (end)

Datafill related to Seconds Based Announcements for table TOPSPARM

The table that follows provides the datafill related to Seconds Based Announcements for table TOPSPARM. This table includes only those parameters that apply directly to Seconds Based Announcements.

Datafill related to table TOPSPARM

Parameter name	Explanation and action
SEND_SECONDS_TO_HOBIC	This parameter enables sending of minutes and seconds to the HOBIC device for display. This parameter applies only to the external real-time rater, not the internal rater. The values are as follows: • Y—send minutes and seconds • N—send only minutes. This value is the default, the process before this functionality. Since down stream processors must be ready to use the seconds based information, use value N during preparation.

Datafill example for table TOPSPARM

The figure that follows shows sample datafill for table TOPSPARM.

MAP example for table TOPSPARM

```
PARMNAME                                          PARMVAL
--------------------------------------------------------
SEND_SECONDS_TO_HOBIC                             Y
```

Translation verification tools

Seconds Based Announcements does not use translation verification tools.

SERVORD

Seconds Based Announcements does not use the Service Order System (SERVORD).

3 Datafilling Operator Services AIN

This chapter contains the operator services advanced intelligent network (AIN) functionalities.

OSSAIN Initial Release

Ordering codes

Functional group ordering code: OSAN0101

Functionality ordering code: not applicable

Release applicability

TOPS08 and up

OSSAIN Initial Release was introduced in TOPS06.

Prerequisites

To operate, OSSAIN Initial Release has the following prerequisites:

- BAS Generic, BAS00003
- Operator Services Basic, OSB00101, and table TOPSFTR parameter TOPS_ON_OFF_SWITCH = Y
- Table TOPSFTR parameter OSSAIN_INITIAL_RELEASE = Y

Description

Operator Services Systems Advanced Intelligent Network (OSSAIN) allows nodes to provide services to switches independently of switch software releases. This allows for faster development of new services. New services can be developed and deployed on OSSAIN service nodes without Digital Multiplex Switch (DMS) switch software development.

This functionality is provided by the following features:

Features in this functionality

Feature number	Feature name
AN1516	TOPS Connection Manager (TOPS06)
AN1526	OSSAIN Prep Development (TOPS06)
AN1527	OSSAIN Data Communications (TOPS06)
AN1528	OSSAIN Protocol (TOPS06)
AN1529	OSSAIN Call Processing (TOPS06)
AN1530	OSSAIN Transitions (TOPS06)
AN1531	OSSAIN Triggers (TOPS06)

OSSAIN Initial Release (continued)

Features in this functionality

Feature number	Feature name
AN1532	OSSAIN Routing and Queueing (TOPS06)
AN1535	OSSAIN Billing (TOPS06)
AN1537	OSSAIN OA & M (TOPS06)
AN1589	OSSAIN TL Changes (TOPS06)
AN1625	CCM Changes for OSSAIN (TOPS06)
AN1629	TOPS Connection Manager TL Changes (TOPS06)
AN1866	OSSAIN - DA interworking (TOPS06)
AN1867	OSSAIN Enhancements (TOPS06)
BY65801	Expand OSSAIN Trigger Table Indicies (TOPS08)

Operation

The contents of this section are the following:

- Optionality
- Defining OSSAIN nodes - changed
- Defining voice links
- Selecting functions (services)
  - — Select OSSAIN
  - — Select initial service
  - — DA calls
  - — Routing ADACC alternate billing calls to OSSAIN
  - — Base service type
  - — Block initial service
  - — Error handling (new)
  - — Non-OSSAIN calls
  - — Call float
  - — Transfer to IC
  - — Trigger processing for subsequent service
  - — Block subsequent service

OSSAIN Initial Release (continued)

  - — Call and tables timing diagram
  - — Examples
  - — Selecting services for operator floated and automated system calls
- Sessions
  - — Trigger event inform session (new)
- Transitions
- Sanity timers
- Extension blocks
- Logs
- OMs

OSSAIN Initial Release (continued)

History

The history of OSSAIN is the following:

- TOPS06 - Initial Release, OSAN0002.
- TOPS07 - Release of functionality OSSAIN 07 Enhancements, OSAN0003, affected this functionality as follows:
  - — Datafill
    - – New table OANODNAM is added to define node ids and names.
    - – Table EXNDINV is no longer used for OSSAIN. The OSSAIN information is moved into modified table OANODINV.
    - – Table OAINPARM parameter NOTIFY_TIMER range is changed from 0-3600 to 0-32400.
    - – Table OAINPARM parameter ALT_BILL_HANDOFF_METHOD is added.
    - – Table OADTFPRF field DTMFIDX range is increased from 0-99 to 0-2046.
    - – Table OAFUNDEF is changed to allow trigger event inform session pools with new field TRIGGER_AREA.
    - – Table OASESNPL is changed to allow trigger event inform session pools with new fields TRIGEVNT and TRIGGER_AREA.
    - – Table TRKGRP, for TOPSVL trunk groups, field DIR is added.
    - – Table QAPLNDEF field NUMAGNTS, the maximum value is increased for OSSAIN applications.
  - — OMs
    - – AABSHAND has new registers for tracking service node handoffs to AABS.
  - — LOGS
    - – TCCI100-101 are used, 102 is new. These logs indicate DAS protocol errors.
- TOPS08 - The following tables are changed:
  - — OATPRFIX: For fields CPROFIDX, TPROFIDX, and DPROFIDX the range of subfield PROFIDX is expanded to 0-2046.
  - — OACNNPRF: Tthe ranges of fields DTMFIDX and CAUSEIDX are expanded to 0-2046.
  - — OACAUPRF: Tthe range of field IDX is expanded to 0-2046.
  - — OATLKPRF: Tthe range of field TALKIDX is expanded to 0-2046.

OSSAIN Initial Release (continued)

— OADSCPRF: Tthe ranges of fields DISCIDX and DTMFIDX are expanded to 0-2046.

Optionality

This functionality is optional, controlled by Software Optionality Control (SOC). The SOC optionality provides two possible states: IDLE and ON. This functionality is delivered in the IDLE state and must be set to ON for operation.

When the functionality is set to IDLE, all new data fields and tables are present and may be datafilled, but calls can not be routed to an OSSAIN service node. Calls attempting to route to a call type for queue (CT4Q) with the table CT4QNAMS field SYSAREA set to OSSAIN receive Reorder treatment. In addition, OSSAIN trigger processing from the operator and Traffic Operator Position System (TOPS) switch automated systems are ignored when the OSSAIN SOC option is set to IDLE.

For information on using SOC, please refer to the *Software Optionality Control User's Manual*, 297-8991-901.

Defining OSSAIN nodes

In an OSSAIN network, switches and service nodes are called OSSAIN nodes. OSSAIN nodes are defined in tables OANODNAM, OANODINV, ENTYPES, and ENSITES.

OSSAIN utilizes the ethernet interface unit (EIU) to interface internet protocol (IP) traffic to the ethernet. Therefore, the existing IP related tables (LIUINV, IPNETWRK, IPROUTER, and IPTHRON) must be datafilled for the EIU associated with each switch (host or remote) to route IP messages.

Table IPNETWRK, field PARMAREA, allows screening from the Ethernet to prevent being bombarded with messages. Refer to the datafill procedure section for more details.

Descriptions of these tables and sample datafill are provided in the datafill procedure section. The following figure shows the table flow:

OSSAIN Initial Release (continued)

Datafill tables for defining OSSAIN nodes

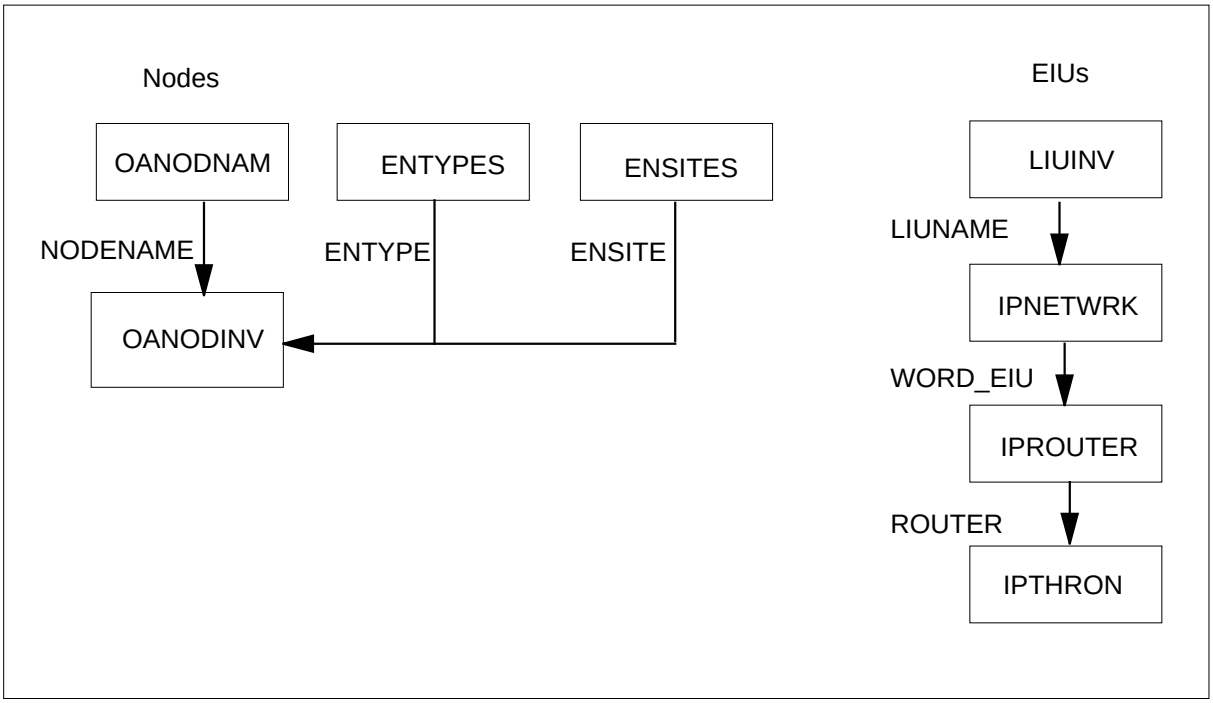

OSSAIN nodes can be configured as either standalone or OSSAIN centralized (OSAC). The OSAC configuration is supported by functionality OSSAIN 07 Enhancements, OSAN0003. This functionality, OSSAIN Initial Release (OSAN0002), only supports the standalone configuration.

Standalone configuration

In a standalone configuration, service node(s) provide services to a host switch. The host performs automatic call distribution (ACD), voice connections, and maintenance for each service node. The host switch does not need to communicate with other switches regarding the service nodes. Each service node communicates with one switch, the host, for call processing.

The following is an example standalone configuration where service nodes 1 and 2 provide services to a host switch:

OSSAIN Initial Release (continued)

Complete standalone configuration example

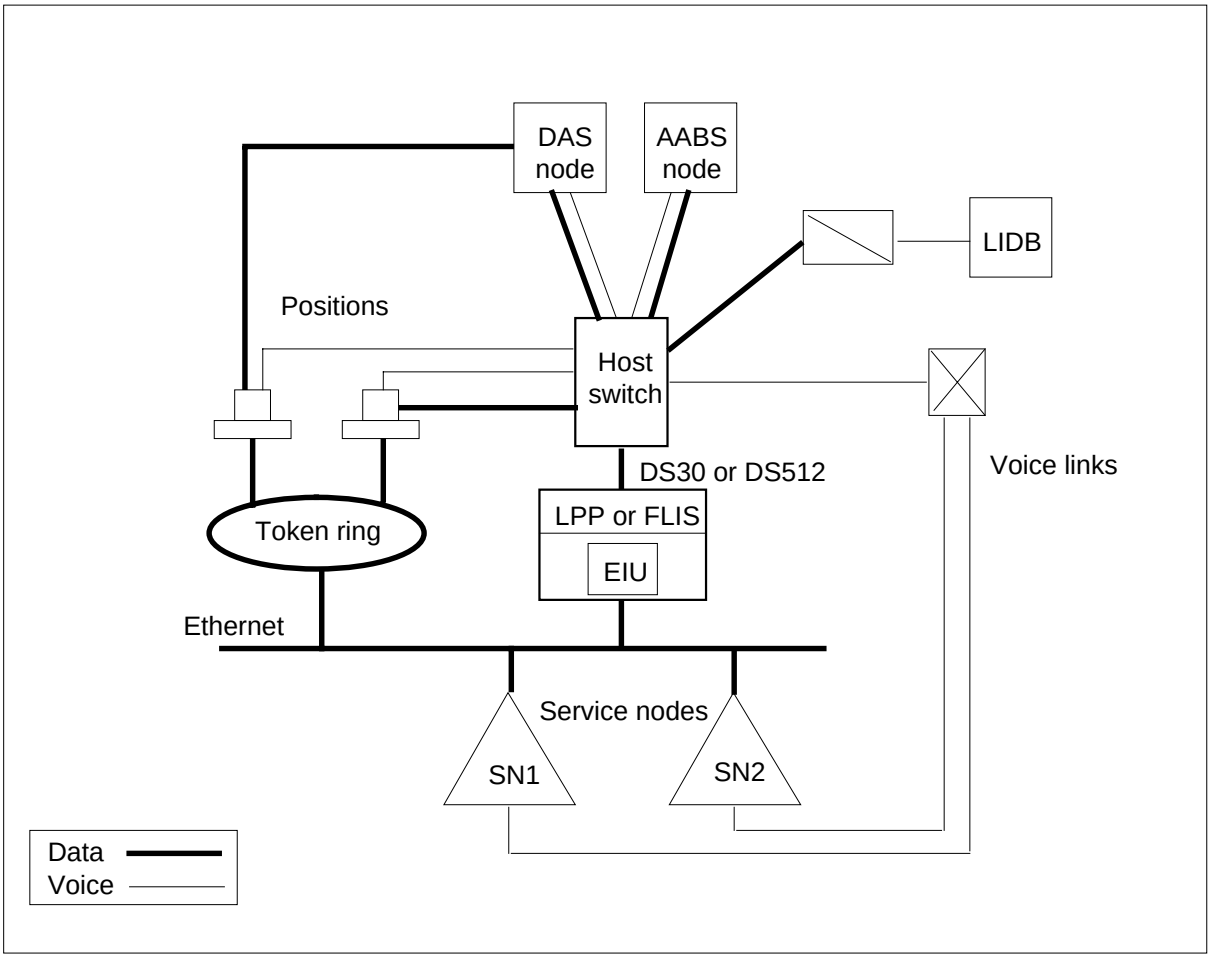

In the above figure, service nodes are centralized off the host switch by using an ethernet local area network (LAN). The service nodes are networked together by the LAN and the host switch is interfaced to the LAN by an ethernet interface unit (EIU).

All service node voice links are connected to the host switch.

The following is a simplified version of the standalone configuration:

OSSAIN Initial Release (continued)

Example configuration

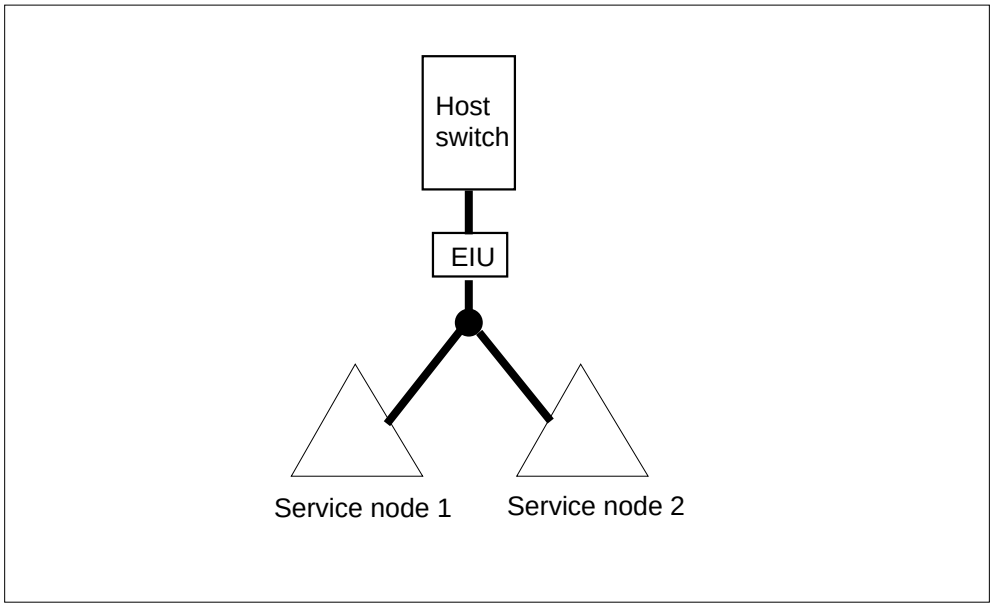

For the above network, tables OANODNAM and OANODINV in the host are datafilled as follows:

MAP display example for table OANODNAM

```
NODEID     NODENAME
-----------------------------------------------------------
0          SN_01
1          SN_02
```

MAP display example for table OANODINV

```
NODENAME  NODEAREA
-------------------------------------------------------------------------
SN_01     OSNM 0 UDP IPV4  47 245 1 34  7001 Y 2 20 240 60 SN
                                          4 BB 3  LOCAL RTP_1
SN_02     OSNM 1 UDP IPV4  47 245 1 35  9001 Y 2 20 240 60 SN
                                          4 BB 4  LOCAL  RTP_2
```

The above examples show that a tuple is datafilled for each service node. Each service node tuple contains the IP and port addresses. The port addresses are then associated with applications in table OASESNPL (discussed later in this document).

Defining voice links

This functionality only supports the standalone configuration. For the OSAC configuration, refer to functionality OSSAIN 07 Enhancements, OSAN0003.

Standalone configuration

Dedicated trunk groups must be defined for voice channels between the host switch and service nodes. Voice channels to one or more service nodes can be combined in the same trunk group. The dedicated voice trunks must be trunk group type TOPSVL, datafilled in tables CLLI, TRKGRP, TRKSGRP, and TRKMEM.

Then, table OAVLMAP maps the logical channel numbers received from the service nodes to the actual circuits in table TRKMEM. The nodename from table OANODINV is used to index table OAVLMAP.

Datafill for the logical voice channels must match between the host and service nodes.

Details of these tables are given in the datafill procedure section. Table flow is given in the following figure:

Datafill tables for voice links

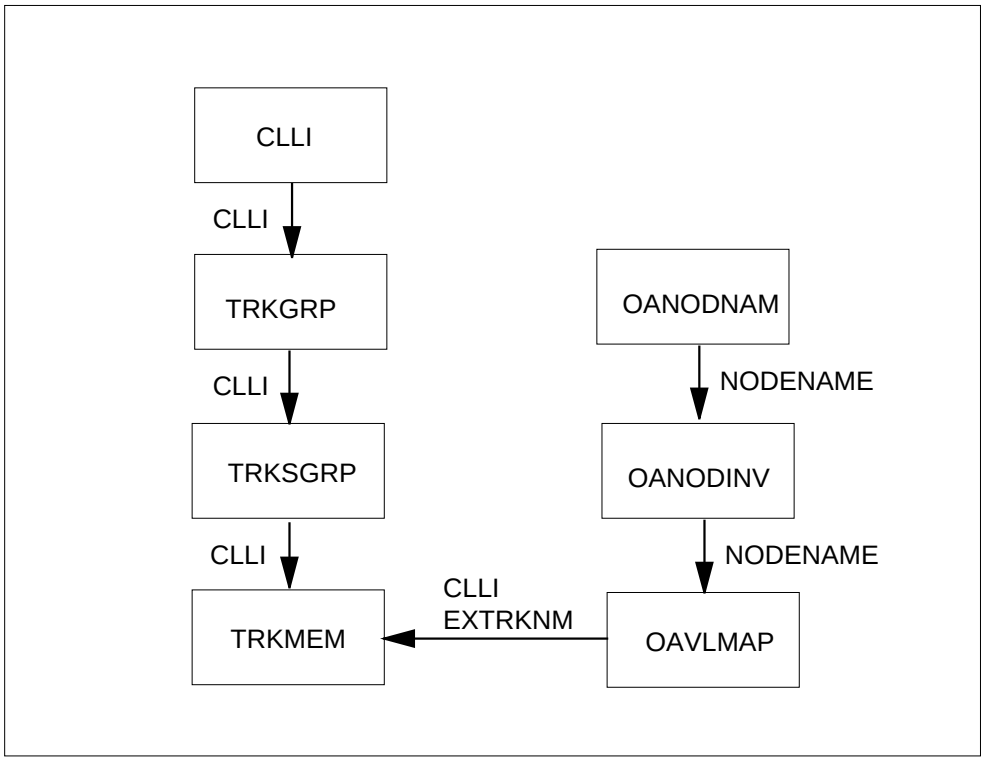

OSSAIN Initial Release (continued)

Selecting services (functions)

When a call is received, datafill selects the types of services. Note, OSSAIN uses the word `function' for a service. The following figures show the call and table flow:

OSSAIN Initial Release (continued)

Call flow for selecting services (initial)

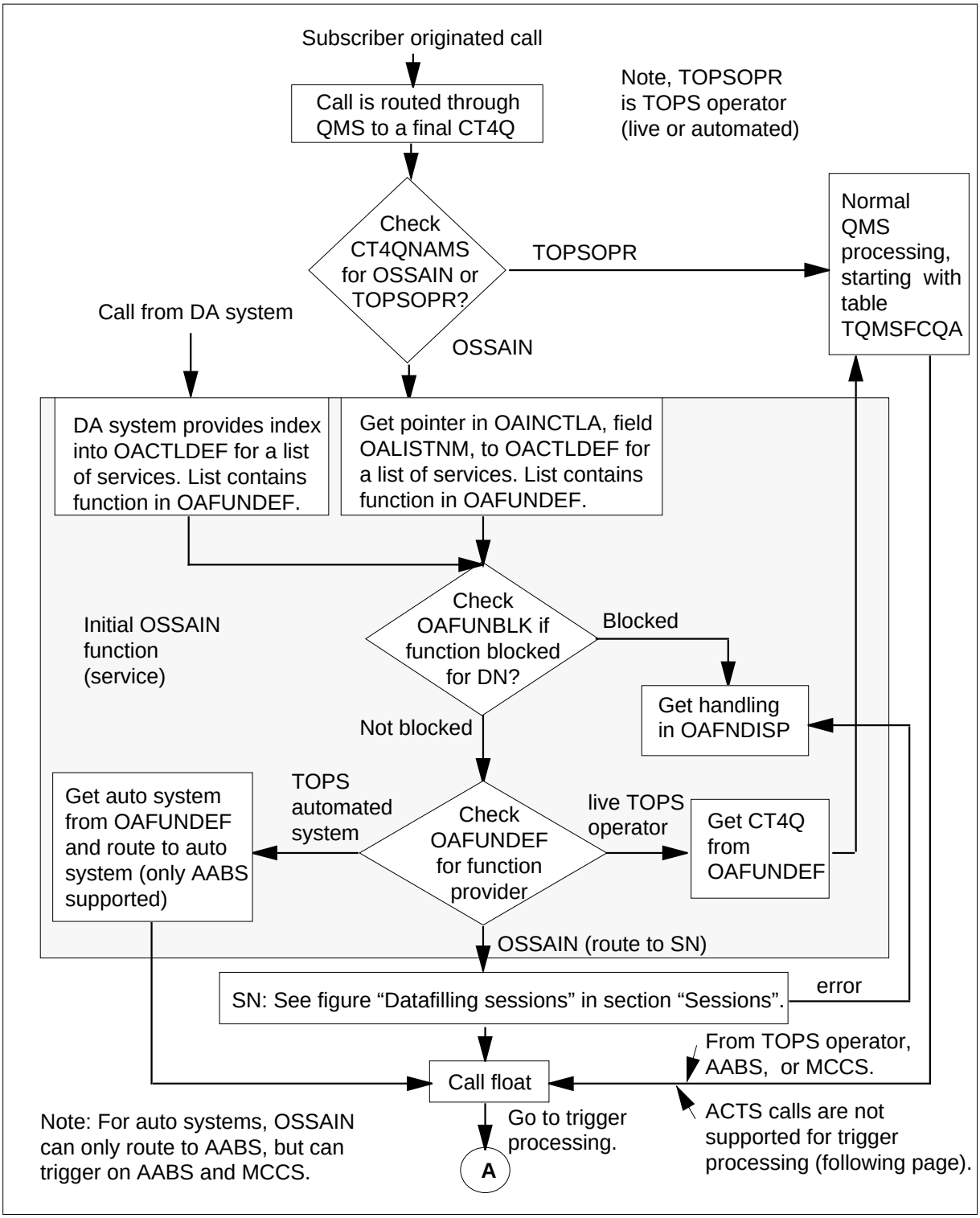

OSSAIN Initial Release (continued)

Call flow for selecting services (continued) (subsequent)

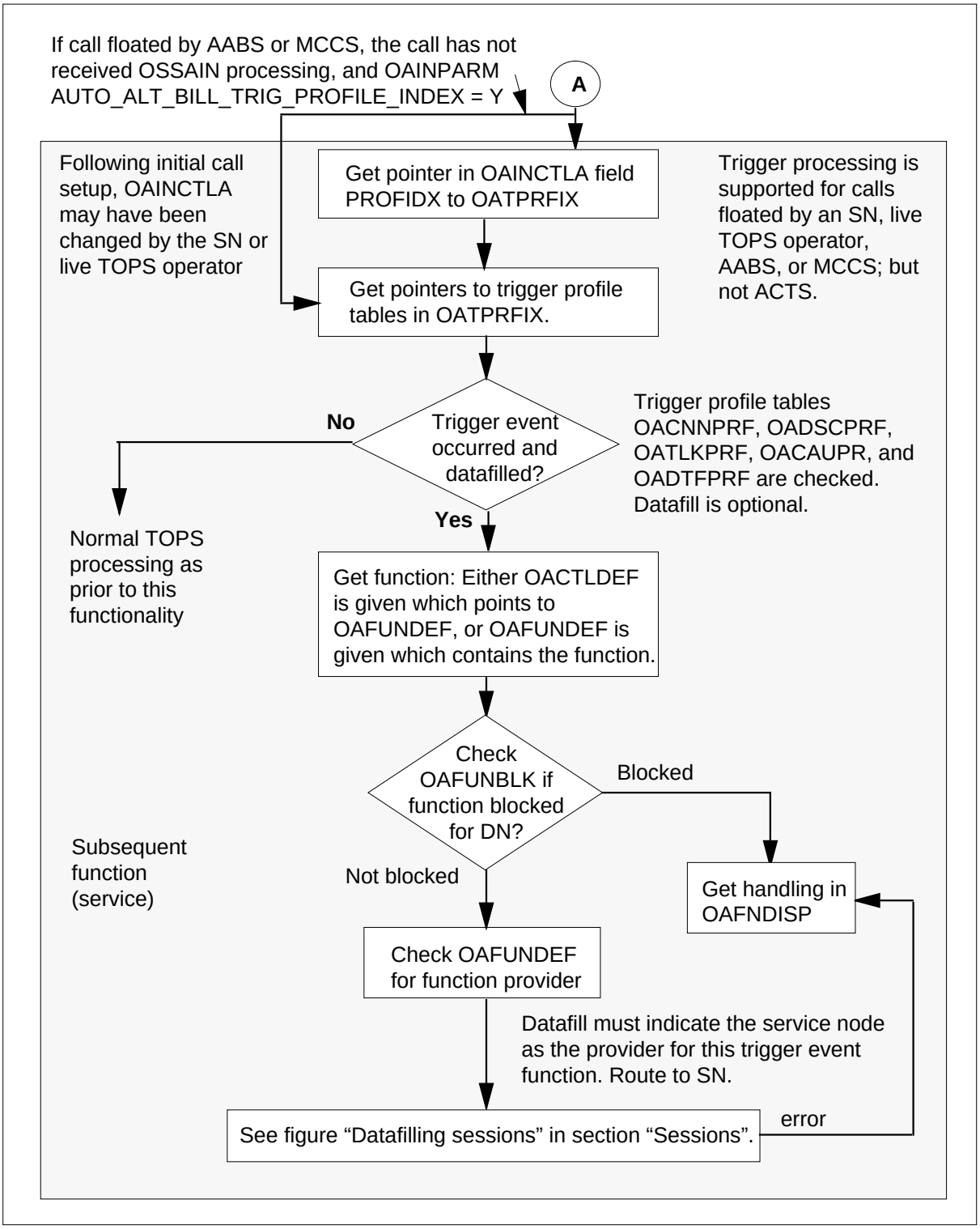

OSSAIN Initial Release (continued)

Table data flow for selecting an initial service during initial call set-up

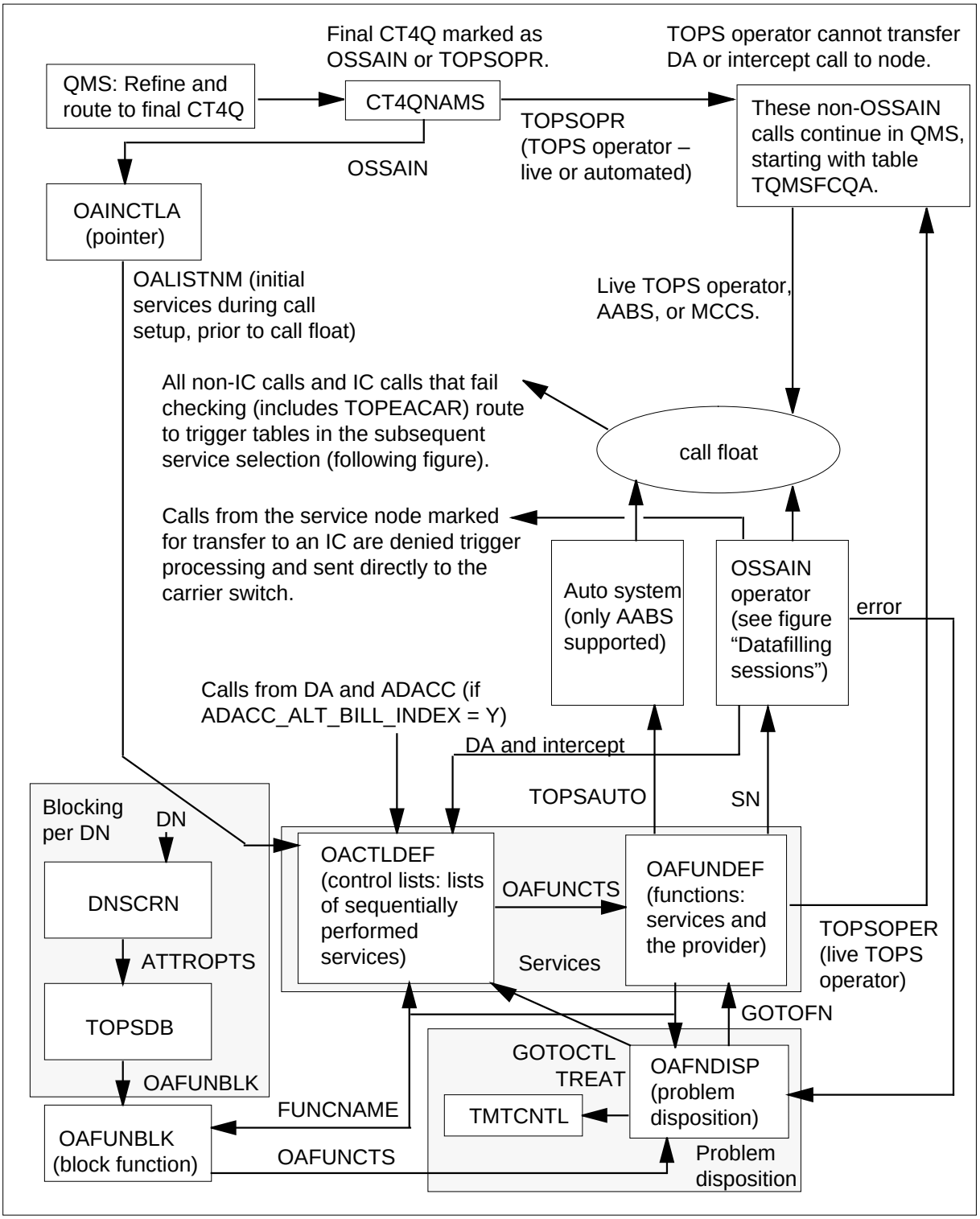

OSSAIN Initial Release (continued)

Table data flow for selecting subsequent service(s) during call float - optional

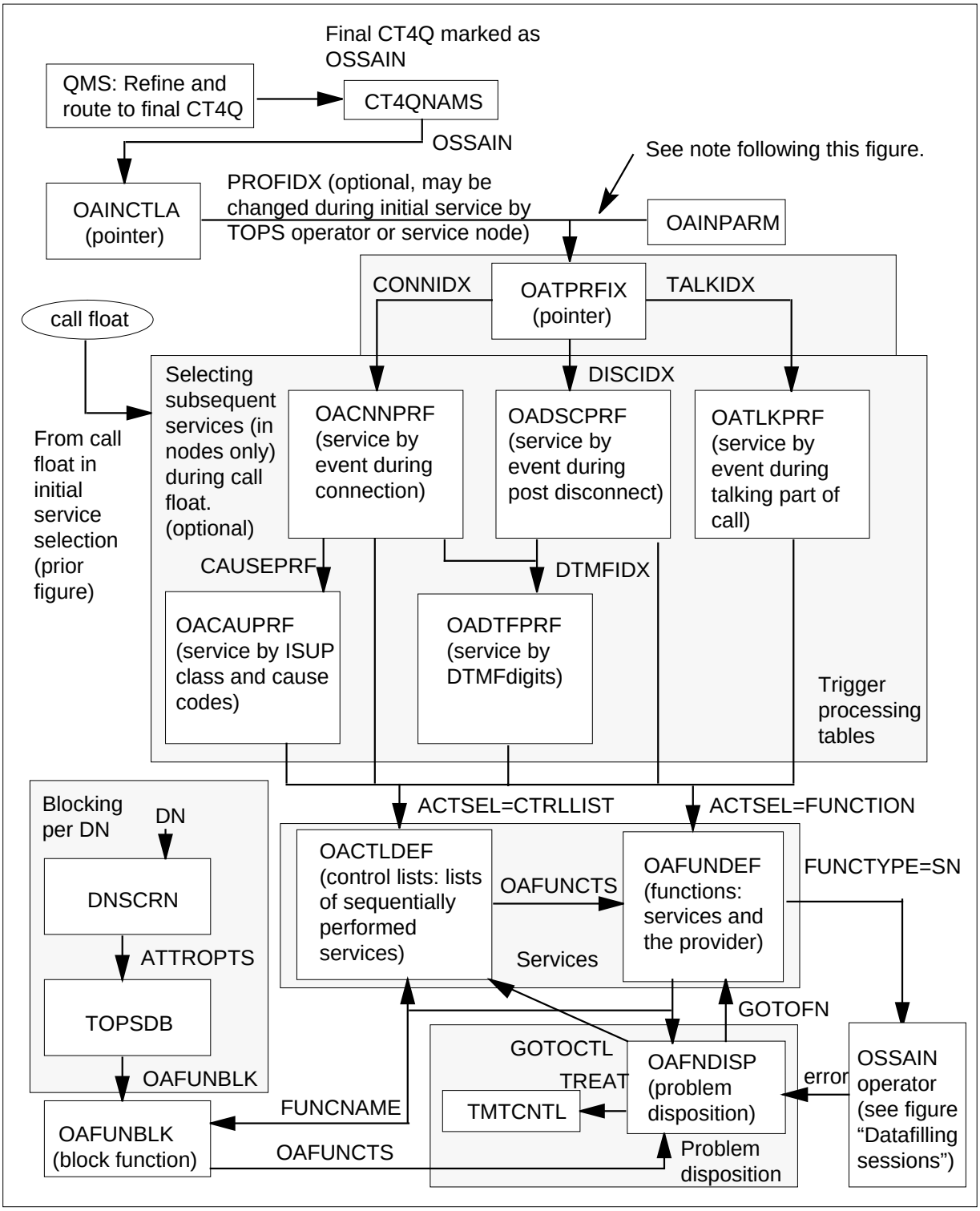

OSSAIN Initial Release (continued)

Note: Table OAINCTLA provides an index into table OATPRFIX. This index can be changed if either of the following conditions occurs:

- the call is floated by AABS or MCCS, the call has not received OSSAIN processing (the call is marked in table CT4QNAMS as TOPSOPR), and table OAINPARM parameter AUTO_ALT_BILL_TRIG_PROFILE_INDEX = Y
- the call is floated by an operator, the call has not received OSSAIN processing (the call is marked in table CT4QNAMS as TOPSOPR), and table OAINPARM parameter OPR_TRIGGER_PROFILE_INDEX = Y

The tables in the above figures are described in detail in the datafill procedure section.

In the above figures, only calls routed to the queue management system (QMS) are eligible for OSSAIN. In QMS, calls receive normal processing when routing through the refinement tables to a final CT4Q. Then, a new field in table CT4QNAMS marks the final CT4Qs for OSSAIN processing by a service node (field SYSTEM = OSSAIN) or processing by the switch as prior to this functionality (field SYSTEM = TOPSOPR).

Note, new dedicated refinement and final CT4Qs for OSSAIN must be datafilled. These refinement tables are ordered under field PREOPR in tables TQORDERA and TQORDERB. Refer to the Host QMS functionality, ADVQ0003, for further details on datafilling QMS. The following figure shows the QMS tables to be datafilled for OSSAIN:

OSSAIN Initial Release (continued)

QMS tables for OSSAIN

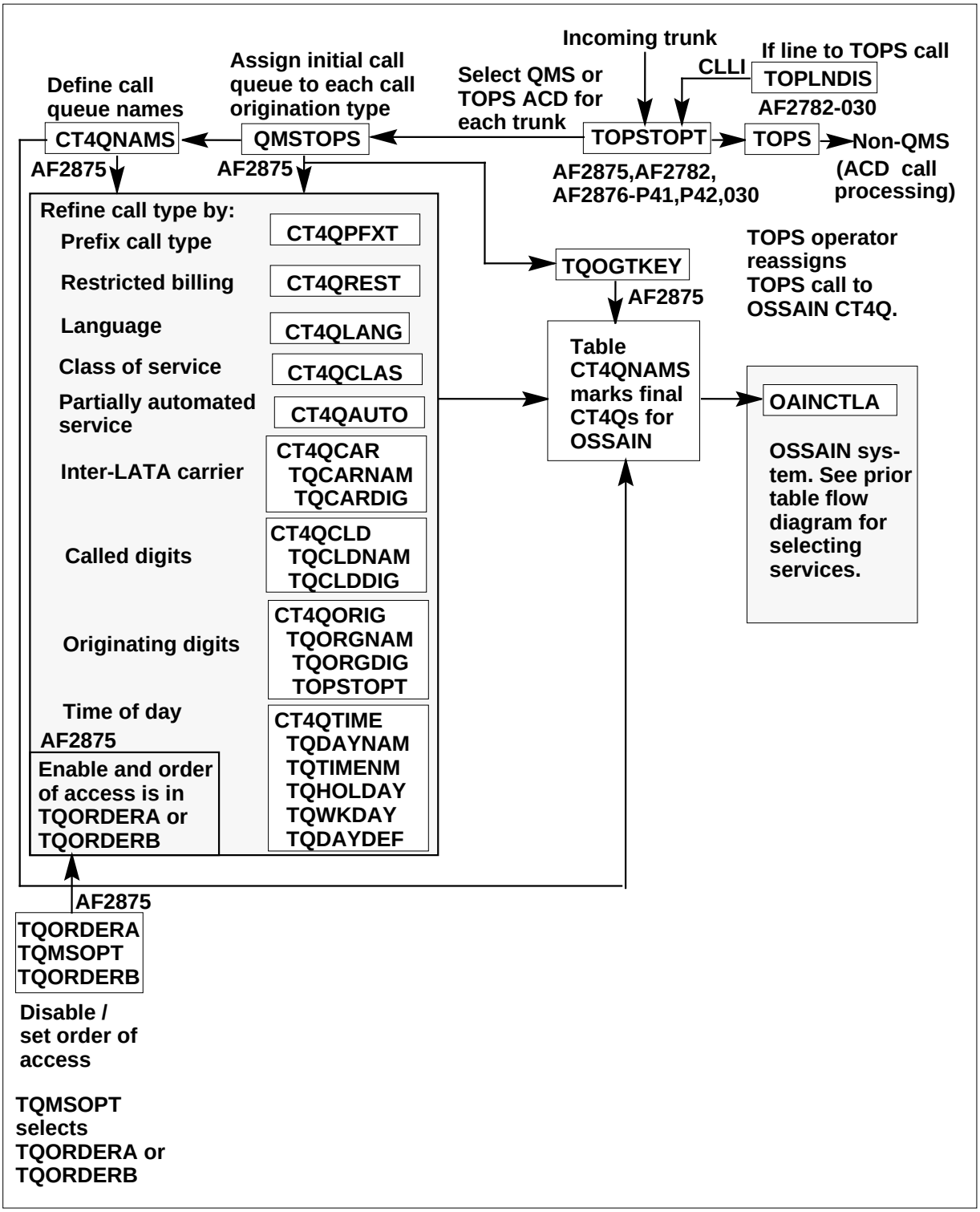

OSSAIN Initial Release (continued)

QMS tables for OSSAIN (continued)

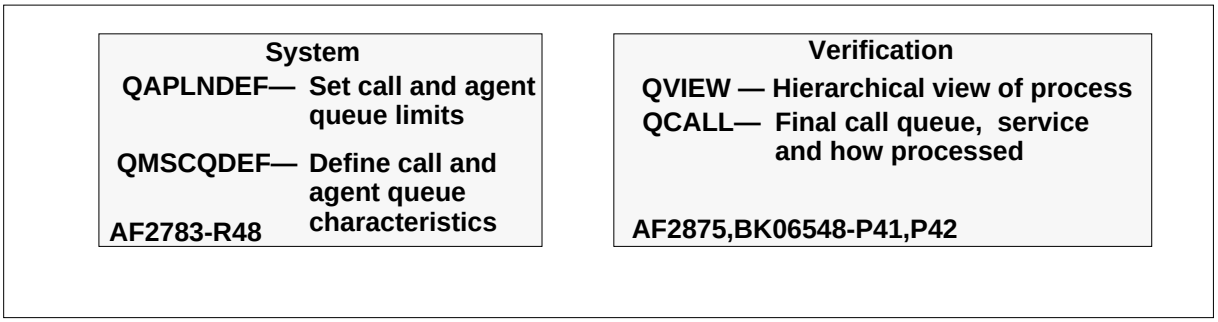

The prior figures are discussed in the following subsections.

Select OSSAIN

After a call is routed by QMS to a final CT4Q according to active table TQORDERA or TQORDERB, the call is directed to either a TOPS operator (live or automated) or a service node. This is determined in CT4QNAMS by new field SYSAREA with values OSSAIN (service node) and TOPSOPR (TOPS operator). A TOPS operator is either live or automated (that is, AABS, ACTS, or MCCS). When set to TOPSOPR, the call is processed as prior to this functionality. When set to OSSAIN, the call is directed to the service selected by the new OSSAIN tables discussed in the following subsections.

Call types: OSSAIN supports a limited number of call origination types. QMS table QMSTOPS assigns an initial call queue according to the call origination type. Therefore, starting with table QMSTOPS, datafill the QMS tables to route only supported call types through QMS to OSSAIN. Otherwise, unsupported call types routed to OSSAIN are sent to treatment. The supported call types are the following:

- UNSPEC (unspecified)
- OH (operator handled, 0-)
- OA (operator assisted)
- DD (direct dialed, 0+)
- DELAY
- 555
- TS (toll station)
- TSUB (toll subscriber)
- 211, 311, 411, 511, 611, 711, 811, 911, 999
- HOM555 (home 555)

OSSAIN Initial Release (continued)

- FOR555 (foreign 555)
- SPARE1, SPARE2, SPARE3, SPARE4, SPARE5
- INTS (service intercept)

*DD calls:*Subtable STDPRTCT.STDPRT must properly mark direct dialed calls for operator assistance. Then, the call routes to table QMSTOPS for selection of QMS and later selection of OSSAN. Otherwise, the call tandems through the TOPS office. Refer to the datafill procedure section, subtable STDPRTCT.STDPRT, for details.

Select initial service

Table CT4QNAMS indexes into new table OAINCTLA (OSSAIN Control List Assignment) with the CT4QNAM. Note, when an operator changes the CT4Q, the index into table OAINCTLA is also changed. Table OAINCTLA contains field OALISTNM which selects the initial service. Field OALISTNM points to a list of sequentially performed services in new table OACTLDEF (OSSAIN Control List Definition). The services are defined in new table OAFUNDEF (OSSAIN Function Definition).

DA calls

Also, the directory assistance (DA) system can indicate that a DA call should be routed to a service node. Then, the DA system provides an index into table OACTLDEF. This is only supported for Nortel Standard DA Protocol. Following are the call processing sequence of events for successful processing of a DA call and transfer to a service node:

1. The calling party dials DA service with NPA+555 or 411.
2. The caller is presented to DA and the DA operator.
3. If needed by the service, DA performs service eligibility screening on the calling party and their attributes.
4. Requested listing information is returned to the operator.
5. If needed by the service, DA performs service eligibility screening on the called party and its attributes.
6. If attached, the operator selects the line and releases to audio.
7. If the call is not eligible, or does not require additional services, the DA system requests that the DMS switch transfer the call to an audio response unit for normal audio treatment using existing processes.
8. If screening has passed and additional services provided by another service node are desired, a new Nortel Standard DA Protocol message from the DA system indicates to the DMS switch that the call is to be transferred to an appropriate OSSAIN service node.

9. The DMS switch receives the message and executes the Control List index specified in the message. Also, the message indicates the service node for subsequent processing.
10. The DMS switch closes out pending AMA associated with DA, and changes the call to toll and assist (TA). If there are any restrictions to the calling party, such as a coin or hotel originator, the DMS switch changes the class charge to unspecified, and forces the call to sent-paid restricted billing. The call is transferred to OSSAIN whether or not DA has been completed. If there is a `B' party as determined by DA, the call is sent to OSSAIN as a zero plus (0+) call. If there is no `B' party, the call is transferred to OSSAIN as a zero minus (0-).
11. The DMS switch notifies the appropriate OSSAIN service node.
12. The service node takes over the call.

Routing ADACC alternate billing calls to OSSAIN

ADACC calls requiring alternate billing can optionally be routed to an OSSAIN service node by a Control List for billing verification. This is done with table OAINPARM parameter ADACC_ALT_BILL. When this parameter is set to N (no, do not attempt to route to OSSAIN), ADACC alternate billing calls are sent to AABS. When set to Y (yes, attempt to route to OSSAIN) and a valid Control List is specified, ADACC alternate bill calls are sent to an OSSAIN service node.

There are some exceptions to routing ADACC calls to an OSSAIN service node, where the table is datafilled but DMS call processing continues as if the parameter was set to N. If the specified control list routes the call when any one of the following is true, the call is routed as if the parameter was set to N:

- The call is not sent to a control list that routes to a service node.
- OSSAIN is not available due to lack of software resources.
- OSSAIN is not SOCed on.
- The call is not using the QMS queuing system.

Base service type

The base service type is determined by datafill against the OSSAIN function, field ORIGSERV in table OAFUNDEF. The service is only applied once, at call setup for calls originating at the DMS switch. Calls originated by the service node always receive TA service.

DA and Intercept call types can only be disposed of by the service node by an End Call or transfer to Control List operation. Any request to float a DA or Intercept service call is denied by the DMS switch.

OSSAIN Initial Release (continued)

The service node cannot transfer DA calls (which originated at the DMS switch) to a toll and assist operator.

The service from the ORIGSERV field in table OAFUNDEF is not applied to calls originated by the service node and the service is not applied to calls transferred by the service node or operator.

Block initial service

However, a service may be blocked according to the originating directory number. This is indicated in new table OAFUNBLK (OSSAIN Function Block). The directory numbers are listed in table DNSCRN which uses table TOPSDB to index into table OAFUNBLK. If the service (function) is blocked, new table OAFNDISP (OSSAIN Function Disposition) determines handling.

If a service is not blocked, table OAFUNDEF determines the service provider: an OSSAIN node, live TOPS switch operator, or TOPS switch automated system. Only Automated Alternate Billing Service (AABS) is supported. Service by an OSSAIN node is described in later section “Sessions". Then after one of these services, the call reaches call float (defined in a later subsection). During call float, events occur that can optionally be used to select subsequent services according to datafill in new tables that are described in later paragraphs. This process is referred to as trigger processing; that is, a call float event can be datafilled to trigger processing of the call.

Error handling (new)

Table OAFNDISP is used to handle the following errors:

- Deflection and overflow: Calls sent to OSSAIN queues may deflect or overflow as determined by the QMS CAM the same way as for operator calls.
- Blocked calls: Calls that were blocked from a function.
- Failed session: Calls that failed to send an OAP Session Begin message to a service node once an agent for that function was already selected.

For these errors, table OAFNDISP allows the call to be routed to treatment, transferred to another function, or transferred to another control list.

Non-OSSAIN calls

Also, non-OSSAIN calls that reach call float are candidates for trigger processing. These are the calls marked in table CT4QNAMS with field SYSAREA set to TOPSOPR which receive normal TOPS processing as prior to this functionality. These calls are from a live TOPS switch operator or automated TOPS switch operator—AABS or Mechanized Calling Card Service (MCCS). Calls from ACTS that reach call float are not supported for

trigger processing due to interactions with coin recalls during the talking and disconnect periods of the call. Note that during call float an AABS call can come from either OSSAIN initial selection (table OAFUNDEF) or non-OSSAIN processing (TOPSOPR in table CT4QNAMS). But, an MCCS call can only come from non-OSSAIN processing.

A TOPS operator cannot transfer a DA or intercept service call to an OSSAIN service node.

Call float

Call float is defined as follows:

Call float occurs when a service node, operator, or TOPS automated system (only AABS and MCCS are supported for trigger processing) releases the call and the parties are connected. Calls can be floated by the three systems under the following circumstances:

- Service node:
  - — prior to connecting to the forward party, or
  - — after connecting to the forward party, but prior to answer, or
  - — once the parties are connected and talking
- Operator:
  - — after connecting the parties, or
  - — as part of connecting the parties

  Note, at disconnect, normally the call routes to ACTS or an operator for Time and Charges. However, OSSAIN trigger processing is not supported for calls requiring Time and Charges.
- TOPS automated system (AABS or MCCS):
  - — Calls floated by AABS automated systems use dualtone multifrequency (DTMF) digit `#' to initiate a sequence call. Value OCTO datafilled in table OADTFPRF overrides this processing and routes the call to an OSSAIN node.
  - — Calls floated by AABS automated systems use DTMF digit `*' to initiate pre-OSSAIN Message Delivery Service (MDS). Value STAR datafilled in Table OADTFPRF overrides this processing and routes the call to an OSSAIN node.

Transfer to IC

Calls that reach call float are candidates for trigger processing as is described later. However, there is an exception, calls at the service node requiring an

OSSAIN Initial Release (continued)

interLATA carrier (IC). When the service node determines an IC is required, the following checks are performed in table TOPEACAR:

- Whether a query should be launched for billing validation according to field OPSERV (set to SERV or NOSERV).
- Whether queries are blocked for the carrier according to the carrier number of the call as follows:
  - — Is carrier associated with the call?
  - — Is a valid carrier number associated with the call?
  - — Is the carrier valid in the office but not allowed to complete this call?
- Whether a valid service type provided by the operating company for the carrier.
- Whether the class charge is valid for the particular station class of the calling party.

If the call passes these checks, the call is marked for transfer to an IC, reaches call float, is denied trigger processing, and transferred to the carrier switch. If the call fails any of these checks, it passes to trigger processing.

Trigger processing for subsequent service

For non-IC calls, after the call reaches call float, table OAINCTLA field PROFIDX can optionally point to new table OATPRFIX (OSSAIN Trigger Profile Index) for selection of subsequent services (may only be provided by an OSSAIN node) based on events during call float. Note, fields OALISTNM and PROFIDX are maintained on a call basis and can be changed by the service node or live TOPS operator during the initial call service. The operator changes this according to table TQOGTKEY which changes the final CT4Q. Also, the index into table OATPRFIX can be changed by table OAINPARM parameters if either of the following conditions occurs:

- the call is floated by AABS or MCCS, the call has not received OSSAIN processing (the call is marked in table CT4QNAMS as TOPSOPR), and table OAINPARM parameter AUTO_ALT_BILL_TRIG_PROFILE_INDEX = Y
- the call is floated by an operator, the call has not received OSSAIN processing (the call is marked in table CT4QNAMS as TOPSOPR), and table OAINPARM parameter OPR_TRIGGER_PROFILE_INDEX = Y

However, either index change can be overridden by changes to the pointer in OAINCTLA from the service node or TOPS operator.

Then, table OATPRFIX is used to index into new tables OADSCPRF, OATLKPRF, and OACNNPRF (described below) that select subsequent

services only on nodes (after the initial call service). Services are selected according to call processing characteristics by the following new tables:

- OACNNPRF (OSSAIN Connecting Profile) selects services according to events during call connection. Also, this table contains indices into tables OACAUPRF and OADTFPRF.
- OATLKPRF (OSSAIN Talking Profile) selects services according to events during the talking portion of the call.
- OADSCPRF (OSSAIN Post Disconnect Profile) selects services according to events during post disconnect. Also, this table contains an index into table OADTFPRF.
- OACAUPRF (OSSAIN Cause Profile) selects services according to ISUP class and cause codes. This table can be used during call connection.
- OADTFPRF (OSSAIN DTMF Digits Profile) selects services according to DTMF digits. This table can be used during call connection and post disconnect.

The above trigger tables select subsequent services defined in tables OACTLDEF and OAFUNDEF. Subsequent services can only be provided by an OSSAIN node. Tables OACTLDEF and OAFUNDEF also define initial services which can be provided by an OSSAIN node, TOPS switch operator, or TOPS switch automated system (only AABS is supported). Therefore, table OAINCTLA, field OALISTNM (the initial service selector) can point either directly or through OACTLDEF to services datafilled in table OAFUNDEF with any of the 3 providers. And, table OAINCTLA, field PROFIDX (the subsequent service selector) can only point (through the trigger tables) to services datafilled in table OAFUNDEF with the an OSSAIN node provider.

Block subsequent service

After a service (function) is selected in OAFUNDEF, service blocking is checked and processed the same as in initial service processing.

If a call is deflected or overflows, a function is blocked, or a session begin message is not sent, table OAFNDISP redirects the call to treatment, another function, or a control list. Table QMSCQDEF contains values for determining overflow and deflection. These values can also be specified through profile specific priorities in table OQCQPROF, which overrides table QMSCQDEF.

Summary figure

The following figure shows the tables and call events used to select services:

OSSAIN Initial Release (continued)

Sequence of selecting services

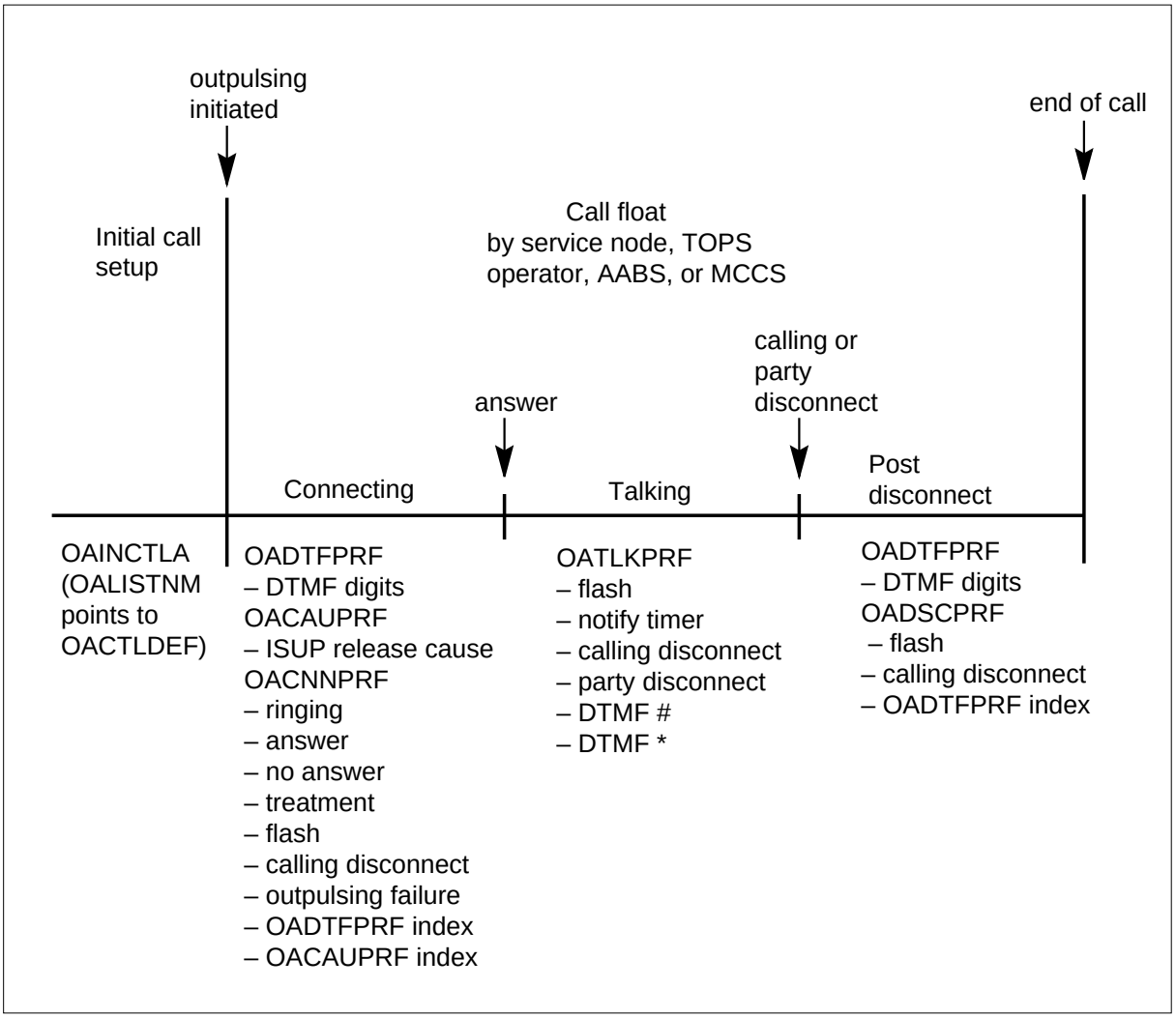

Examples

Following are call flow examples:

Yellow pages call completion with message delivery (MDS) example: In this example the subscriber dials a yellow pages service with call completion capability. Sample datafill follows this description. The call is routed to CT4Q 0+YELLOW in tables CT4QNAMS and OAINCTLA (sequentially) which points to profile 0 in the Connecting, Talking, and Disconnect profiles with no triggers datafilled, denoted below with $ signs.

Profile 0

- Connecting Profile $
- Talking Profile $
- Disconnect Profile $

The call arrives at the yellow pages service node with a trigger profile of 0. The service node offers the subscriber call completion and the subscriber accepts. The yellow pages node then provides access to an MDS node should the DMS switch detect no answer at the terminating party. The service node modifies the trigger profile index to 6 (table OATPRFIX) which provides MDS access in table OACNNPRF.

Profile 6

- Connecting Profile
  - NOANS - MDS
  - Cause User Busy - MDS
  - DTMF * - MDS
- Talking Profile $
- Disconnect Profile $

With this profile in table OACNNPRF, the subscriber is automatically routed to Message Delivery if No Answer (field PROFILE) or ISUP Cause User Busy (field CAUSEPRF) is detected. Message Delivery can also be accessed by the subscriber keying a * (field DTMFPRF).

Following is sample datafill for this and the following call flow examples:

MAP display example for table CT4QNAMS

```
CT4QNUM  CT4QNAME    NOAMA  SYSAREA
---------------------------------------------------------
0        UNSPEC      N      TOPSOPR  N  N  N
1        DA_411      N      TOPSOPR  Y 411_OPR  N  N
2        0+YELLOW    N      OSSAIN
3        DEBIT_CARD  N      OSSAIN
4        PCS_OPR     N      TOPSOPR  Y PCSOPR  N  N
```

OSSAIN Initial Release (continued)

MAP display example for table OAINCTLA

```
CT4Q          OALISTNM         OATPRFIX
-------------------------------------------------------
0+YELLOW       YEL_PAGE        Y 0
DEBIT_CARD     DEB_CD          Y 0
```

MAP display example for table OATPRFIX

```
IDX  CONNIDX  TALKIDX  DISCIDX
-------------------------------------------------------
0     Y 0      Y 0      Y 0
6     Y 2      Y 0      Y 0
8     Y 3      Y 4      Y 5
```

MAP display example for table OACNNPRF

```
CONNIDX  PROFILE
                                          DTMFPRF  CAUSEPRF
-------------------------------------------------------
0        $                                  N        N
2       (NOANS Y FUNCTION MDS_NODE) $   Y 7      Y 8
3       (CLGD Y FUNCTION DEBIT_NODE) $  N        N
```

MAP display example for table OATLKPRF

```
TALKIDX   PROFILE
                                    STAR  OCTO  HOLDRCVR
-------------------------------------------------------
0          $                         N     N    N
4        (NOTFY N N N Y CTRLLIST DEBIT_NODE)
         (CLGD N N N Y CTRLLIST DEBIT_NODE)
         (PTYD N N N Y CTRLLIST DEBIT_NODE) $
                                    N     N    N
```

MAP display example for table OADSCPRF

```
DISCIDX  PROFILE                                          DTMFPRF
-------------------------------------------------------------
0         $                                                N
5       (PTYD Y CTRLLIST DEBIT_NODE)
        (CLGD Y CTRLLIST DEBIT_NODE) $                     N
```

MAP display example for table OADTFPRF

```
DTMFIDX  PROFILE                                        HOLDRCVR
-------------------------------------------------------------
7       (STAR N N FUNCTION MDS_NODE)$                      Y
```

MAP display example for table OACAUPRF

```
IDX   PROFILE
-------------------------------------------------------------
8    (NORM 17 FUNCTION MDS_NODE)
     (NORM 18 FUNCTION MDS_NODE)
     (NORM 19 FUNCTION MDS_NODE)
     (CL2 FUNCTION MDS_NODE) $
```

Debit card example: In this example a subscriber makes a call billed to the subscriber's debit card. The call arrives at the DMS switch and is assigned a Profile Index of 0. There are no triggers associated with trigger profile 0. Refer to the datafill examples in the prior call flow example.

Profile 0

- Connecting Profile $
- Talking Profile $
- Disconnect Profile $

The call arrives at the debit billing node. The debit node determines that the subscriber has only 5 minutes of conversation time remaining on the debit card. The debit node should be notified when a talking time of 5 minutes has transpired. In the call float operation to the DMS switch the debit card sets the profile index and a notification timer. For this example the debit node sets the profile index to 8 and the notification timer to 5 minutes. Profile index 8 has a notification trigger for the talking state as follows:

OSSAIN Initial Release (continued)

Profile 8

- Connecting Profile $
  - CLGD - DEBIT
- Talking Profile
  - NOTIFY - DEBIT
  - CLGD - DEBIT
  - PTYD - DEBIT
- Disconnect Profile
  - CLGD - DEBIT

Upon answer, the call is floated, enters the talking state, and a 5 minute notification timer is started by the DMS switch. If the notification timer expires the Debit node is brought back into the call. It then debits the card, informs the subscribers, and discontinues the call.

Alternatively, either party could disconnect prior to the expiration of the 5 minute notification timer. In this scenario, the debit node is brought back into the call to debit the card.

Selecting services for operator floated and automated system calls

Operator floated, AABS, and MCCS calls can be processed by OSSAIN. This includes DA calls since they involve an operator. Selection of services for these calls is controlled by new table OAINPARM (OSSAIN Parameters). Refer to the datafill procedure section for details.

OSSAIN processing is not available for ACTS calls.

Sessions

An OSSAIN service node provides sessions to a host switch. A session consists of an agent (operator) performing a function (service). Sessions serve OSSAIN call queues just as TOPS operators serve TOPS call queues. A session pool is a group of sessions that provide the same function or functions. There is an ID for the session pool. Session pools are defined in new table OASESNPL (OSSAIN Session Pool). Table flow is shown in the following figure:

OSSAIN Initial Release (continued)

Datafilling sessions (OSSAIN operators)

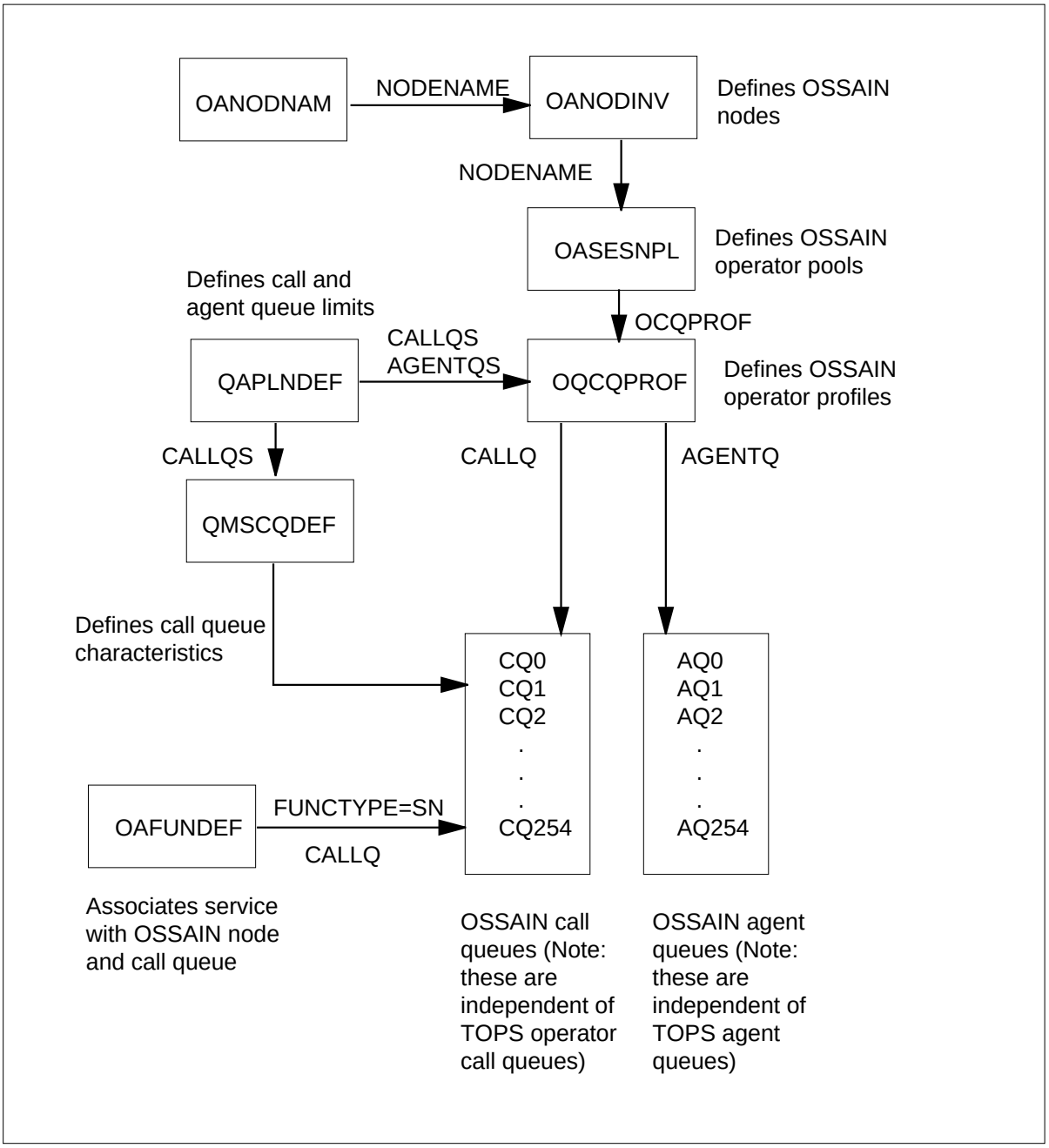

Details of the above tables are given in the datafill procedure section. In the above figure, node names are defined in tables OANODNAM and OANODINV. A node may contain zero or more session pools, defined in table OASESNPL. Each session pool may provide one or more services (functions). Table OASESNPL contains an index into table OQCQPROF which defines

OSSAIN Initial Release (continued)

agent and call queue profiles. The call queue profile specifies which call queues (which are dedicated to functions) are served by the session pool with this profile index. The agent and call queue sizes are limited by table QAPLNDEF. The function (service) of each call queue is defined in table OAFUNDEF.

Following is sample datafill for table OASESNPL:

MAP display example for table OASESNPL

```
SESNPLID SESNPLNM     MAXSESN   NODENAME
                                                                ORIGAREA
-------------------------------------------------------------------------
0       BRAND_NODE1   50         NODE_1
                SUBSCRIBER  S  USEDEFLT  USEDEFLT N 51 UDP 3000 3001
1       BRAND_NODE1   100        NODE_2
                SUBSCRIBER  S  USEDEFLT  USEDEFLT N 52 UDP 4000 4001
2       YELPG_NODE1   50         NODE_1
                SUBSCRIBER  S  USEDEFLT  USEDEFLT N 53 UDP 3000 3001
3       BRDYP_NODE1   150        NODE_1
                SUBSCRIBER  S  USEDEFLT  USEDEFLT N 54 UDP 3000 3001
4      AUTOBILL_NODE3 100        NODE_3
                SUBSCRIBER  S  USEDEFLT  USEDEFLT N 55 UDP 5000 5001
```

Table OASESNPL defines the session pool ID (SESNPLID), session pool name (SESNPLNM), and service node (NODENAME) for these sessions. The above example shows the following configurations:

- One function on one service node

  Node_3 only has autobilling with 100 agents in the fifth tuple. No other tuples contain session pools that provide services on node_3 and this service is not provided by session pools on any other nodes. This is the simplest configuration.

- Multiple functions on one service node

  Node_1 contains 3 session pools that provide services: branding, yellow pages, and a combination pool of yellow pages/branding. These pools are of 2 types: dedicated (50 agents for each service) and combination (150 agents). This ensures that at least 50 agents are dedicated to each service, while 150 agents can be used for either service. Or, the combination pool could be located on a separate node.

- One function on multiple service nodes

  The branding service is located on nodes 1 (50 agents) and 2 (100 agents).

OSSAIN Initial Release (continued)

Table OASESNPL contains an index into new table OQCQPROF (OSSAIN Call Queue Profiles). This table is very similar to its TOPS counterpart, table TQCQPROF (TOPS QMS Call Queue Profiles table). The only difference between the tables is that table TQCQPROF includes information on how to handle delay calls from operators with a given call queue profile. This information is not needed for OSSAIN. Table OQCQPROF indicates the call queues a session pool can serve. The size of the call and agent queues are limited by table QAPLNDEF. Following is sample datafill:

MAP display example for table OQCQPROF

```
CQPROFNM  AGENTQ                                PRIOAREA
-------------------------------------------------------
0         AQ0        OFC (CQ0)$
1         AQ1        OFC (CQ1)$
2         AQ3        OFC (CQ0)(CQ1)$
3         AQ4        PROF (CQ0 10)(CQ1 80)$ (CQ2 10)$
```

Trigger event inform session (new)

The previously discussed sessions include the following:

- The service node sends trigger event information to the switch.
- Either the switch or service node has call control.

Sometimes the switch needs trigger event information before call control can be used or is available.

The solution is a trigger event inform session for subscriber originated calls. This session provides one trigger event inform message to the switch. This session is immediate, that is the next available session is selected. This session is datafilled in table OAFUNDEF as a subscriber originated session with field TRIGEVNT = Y. The following is sample datafill:

MAP display example for table OASESNPL

```
SESNPLID SESNPLNM      MAXSESN   NODENAME
                                                          ORIGAREA
-------------------------------------------------------------------
50      SN_A_SPT       100       SN_A
                SUBSCRIBER S USEDEFLT USEDEFLT Y UDP 7001 7002
51      SN_A_SPT       100       SN_A
                SUBSCRIBER S USEDEFLT USEDEFLT N 51 UDP 7001 7002
```

OSSAIN Initial Release (continued)

The above example shows tuple 50 as the trigger evemt inform session since TRIGEVNT = Y. Tuple 51 session provides trigger event informs and call control since TRIGEVNT = N. Note that both session types are datafilled as pairs.

The above trigger event sessions can be datafilled against functions in table OAFUNDEF with field TRIGEVNT = Y. The following is sample datafill:

MAP display example for table OAFUNDEF in the OSAC remote

```
FUNCNUM   FUNCNAME     FUNCAREA
-------------------------------------------------------
1         FN_1         SN TASERV N  Y CQ1
2         FN_2         SN TASERV Y SN_A_SPT  N
```

The above example shows that if a call routes to function FN_2, then a SN_A_SPT session pool is used for trigger event information.

Transitions

Transitions between services are not always allowed. Table OAINPARM parameter MAX_ALLOWED_TRANSITIONS limits the number of successful transitions. When this number is exceeded, the call is routed to the treatment in parameter DEFAULT_TREATMENT of table OAINPARM. For all transfers, table OACTLDEF is checked for the requested control list name. If not datafilled, the node (service node or switch for an operator or automated service) receiving the request asks for another service from the requesting node. Then, table OAFNDISP is accessed for an alternate service. Following are possible transitions and if allowed:

- service node to service node

  This transfer is allowed if the control list name is datafilled in table OACTLDEF.

- service node to operator

  This transfer is allowed if the control list name is datafilled in table OACTLDEF. Once an agent is obtained, the position type is checked. If the agent is a TOPS IV or a TOPS MP position, a log is generated, a return error message is sent, and the call is taken down since these position types are not supported for OSSAIN. Therefore, datafill should not route calls to these positions. These position types can not receive OSSAIN calls; however, these positions can still receive 0- traffic which can then be directed to an OSSAIN control list.

  Since transitions are allowed from a service node to TOPS MPs, OSSAIN can be utilized without replacing existing TOPS MP terminals. However,

a TOPS MP terminal does not have equivalent functionality—the ability to pass Context Block, custom automatic message accounting (AMA)—to that of an open position protocol (OPP)-compatible position, but, the MPs can still be utilized for operator backup.

For transfers from the service node to a TOPS MP position, a display message is passed for the operator. Therefore, the language of the message must be considered. For example, a calling subscriber has arrived at the SN and selected Spanish as the language for their interaction with the SN. If the SN is going to transfer to an human operator for backup and place the call in a Spanish queue, the SN may want to place the string in Spanish. This type of decision making relies on development and coordination between the Operating Company and the SN provider.

If a call recalls to a service node as the result of a trigger or if a called party is connected, the service node should not transfer this call to an operator. If the service node attempts this transfer, the called party is released and an AMA record is automatically generated along with an OAIN604 log. Alternatively, the node can request a `GEN AMA' to complete billing for the call, and then transfer to an operator.

- service node to AABS

  This transfer is allowed if the requested control list name and call details are valid. The required call details are listed in the “Limitations and restrictions" section. If the call details fail, the call is routed to an operator using the datafilled CT4Q in field OPRONFL of table OAFUNDEF.

- position (TOPS IV, TOPS MP, or OPP-compatible) to service node

  This transfer is accomplished by setting a new CT4Q which maps to a control list where the datafilled function is provided by a service node.

- position (TOPS IV, TOPS MP, or OPP-compatible) to operator

  This transfer is not allowed for OSSAIN transitions. If the requested CT4Q maps to a control list where the datafilled function is provided by an operator, the position release is not acknowledged (NACKed) and the call remains in the initial operator's control. However, standard TOPS transfers from operator to operator are not impacted.

- position (TOPS IV, TOPS MP, or OPP-compatible) to existing TOPS automated system

  This transfer is not allowed for OSSAIN direct transitions. If the requested CT4Q maps to a control list where the datafilled function is provided by AABS, the position release is NACKed and the call remains in the initial

OSSAIN Initial Release (continued)

operator's control. However, standard TOPS operator handoff to AABS is not impacted.

- DA system to service node

  This occurs if the DA system indicates a DA call should be routed to a service node. Then, the DA system provides an index into table OACTLDEF. This is only supported for Nortel Standard DA Protocol.

Sanity timers

The following sanity timers are provided to ensure that resources are not left connected to a dead call:

- On-hook - refer to table OAINPARM, parameter ON_HOOK_TIMER_DURATION
- Call - refer to table OAINPARM, parameter CALL_SANITY_TIMER_DURATION.
- Queued - This timer clears up calls that are queued for a service node but the session pools that serve the call queue are out of service or are drained.. This timer is set if a call is queued with all remaining parties on-hook or the remaining parties go on hook while queued. The timer is set for 10 seconds. When the timer expires, the call is taken down by the switch and an OAIN601 log is generated. This timer is not controlled by a datafillable parameter.

Extension blocks

The number of TOPSRU2 extension blocks is determined by the sum of three existing table OFCENG parameters:

- TOPS_NUM_CAMA_RU
- NUM_TOPS_RU
- GOS_NUM_RU

Note, the DEBUG and DISPCALL tools are used to display extension blocks.

Logs

The following logs are new or modified:

- AUD607 - This log is generated when an OSSAIN call traps or dies and there is an OSSAINRU extension block attached to the call.
- AUD609 - This log is generated when an TOPS call traps or dies and there is a TOPSRU2 extension block attached to the call.
- DAS105 - This log indicates a failure when transferring to an OSSAIN service node because of resource problems. This could indicate an

insufficient number of available software resources, that OSSAIN is turned off in the DMS switch, or that the call is not using the required QMS CAM queuing system. A message is printed out in the log to indicate which of these checks failed.

- DAS106 - This log indicates a failure when transferring to an OSSAIN service node due to an invalid Control List Identifier. This log could indicate either bad data from the DA system or a datafill problem in the DMS switch.
- OAIN200 - This log is generated when an attempt is made to find the disposition for an OSSAIN call and there is no entry for the current function name in table OAFNDISP. The function should be datafilled in table OAFNDISP.
- OAIN201 - This log is generated when a service node requests a connection to a logical voice channel that is not datafilled in table OAVLMAP. The failure is reported to the service node and then the node may choose to select another logical voice channel for the voice connection. The craftsperson should datafill table OAVLMAP.
- OAIN202 - This log is generated when an attempt is made to transfer to a TOPS operator for an OSSAIN call and the position selected is a TOPS IV or TOPS MP. The craftsperson should correct the service profile datafilled against the chosen position (that is, TOPS IV and TOPS MP positions should not have service profiles which include OSSAIN calls).
- OAIN203 - This log is generated when the control list (for a transfer) is not datafilled in table OACTLDEF. The craftsperson should datafill table OACTLDEF.
- OAIN204 - This log is generated when a service node attempts to set a profile index not yet datafilled in Table OATPRFIX. This log contains the profile index number. The craftsperson should datafill table OATPRFIX.
- OAIN205 - This log is generated when an attempt is made to select a CT4Q assigned to receive OSSAIN processing with no corresponding entry in table OAINCTLA. The craftsperson should datafill table OAINCTLA.
- OAIN206 - This log is generated when a post-auto, recall, or assistant refinement (table TQORDERA or TQORDERB) of a TOPS CT4Q results in an OSSAIN CT4Q.
- OAIN300 - This log is generated when an unexpected message arrives during OSSAIN call processing (for example, loss of a voice connection due to network integrity failure).
- OAIN301 - This log is generated when a switch resource for an OSSAIN call cannot be obtained. An example is failure to obtain an OSSAIN recording unit.

OSSAIN Initial Release (continued)

- OAIN302 - This log is generated when a call is assigned an OSSAIN CT4Q but processing cannot continue due to the SOC option being set to IDLE. The call is routed to treatment when this log is generated.
- OAIN303 - This log is generated when a call floated trigger reassigns an OSSAIN Control list or Function that routes the call to an automated system, TOPS operator, or treatment.
- OAIN304 - This log is generated when OSSAIN trigger processing attempts to inform the service node of a trigger event, but fails to obtain a session with the service node.
- OAIN500 - This log is generated whenever a session pool fails an out of service test.
- OAIN502 - This log is generated whenever a session pool goes system busy due to either a failure to return to service or an audit fail.
- OAIN503 - This log is generated whenever a session pool is placed in the offline state.
- OAIN504 - This log is generated whenever a session pool is deleted from table OASESNPL.
- OAIN505 - This log is generated whenever a session pool is placed in the MANB state.
- OAIN506 - This log is generated whenever a session pool comes into service as a result of either a successful session pool audit or a manual action.
- OAIN507 - This log is generated whenever an inservice session pool goes c-side busy due to the service node that it is dependent upon going out of service.
- OAIN600 - This log is generated when the on-hook sanity timer expires. This timer is set to the value in table OAINPARM, parameter ON_HOOK_TIMER_DURATION.
- OAIN601 - This log is generated when the call sanity timer expires. This timer is set to the value in table OAINPARM, parameter CALL_SANITY_TIMER_DURATION. Also, this log is generated if the queue sanity timer expires. This timer clears calls that are hung up while queued for a service node session. The queue timer is set to 10 seconds rather than controlled by a parameter in table OAINPARM.
- OAIN602 - This log is generated when a service node requests connection to a logical voice channel that the switch determines is already in use. The failure is reported to the node and then the node requests another logical voice channel.

OSSAIN Initial Release (continued)

- OAIN603 - This log is generated when a service node requests a connection to a logical voice channel that is in the busy state. The switch reports the error to the service node so it can select a new voice channel.
- OAIN604 - This log is generated when a node attempts to transfer to an operator at any time other than initial call setup.
- OAIN605 - This log is generated when data communications receives a message with an OAP protocol version that is not optimal. The originating service node should be upgraded to a supported OAP protocol version as needed.
- OAIN606 - This log is generated when data communications cannot determine where to route a service node originated message.
- OAIN607 - This log is generated when an error is encountered by data communications while interfacing with the data transport software.
- OAIN608 - This log is generated whenever data communications message tracing has been enabled for the session pool or node specified by an incoming or outgoing call processing class message.
- OAIN609 - This log is generated whenever data communications message tracing has been enabled for the node specified by an incoming or outgoing node class message.
- OAIN610 - This log is generated whenever data communications message tracing has been enabled for the session pool or node specified by an incoming or outgoing session pool class message.
- OAIN611 - This log is generated whenever data communications message tracing has been enabled and a message of undetermined format is processed.
- OAP600 - This log is generated when an invalid value is received in an OAP message or when an invalid message is received for the receiving application.
- OAP601 - This log is generated when an unrecognized operation is requested.
- OAP602 - This log is generated when an unrecognized data block is received with an operation or when an expected data block for an operation is missing.
- OAP603 - This log is generated when a reject response is received.
- PM100 - This log is generated when an out of service test has failed on an OSNM.
- PM103 - This log is generated when an operator services node maintained (OSNM) (defined in table EXNDINV) goes system busy.

OSSAIN Initial Release (continued)

- PM100 - This log is generated when an OSNM is placed into an off-line state.
- PM105 - This log is generated when an OSNM is place in the manual busy state from either the INSV, ISTB, SYSB, or OFFL state.
- PM106 - This log is generated when an OSNM is returned to service by either a successful node audit or manual action.
- PM1028 - This log is produced anytime the service node goes from INSV to ISTB due to a session pool going out of service (SYSB or MANB).
- TOPS107 - This log is generated when a TOPS call requests a TOPSRU2 and one is not available.
- TCCI100-102 - These logs indicate DAS protocol errors.

OMs

The following operational measurements are new or modified:

- AABSHAND - This group is modified with new registers for OSSAIN/operator handoffs.
- EXT - OSSAIN RU extension block is added.
- OADATCOM - This new OM record data communication events for OSSAIN
- OAFLTRIG - This new OM provides peg counts for actions related to OSSAIN float trigger processing. These measurements cover float trigger processing causing call control to transfer to an OSSAIN function or control list.
- OAINQMS - This new OM provides peg counts for OSSAIN calls on a queue basis. It provides counts for calls that request an OSSAIN session from the QMS CAM and also counts on the action taken by the CAM in response to the request.
- OANODEDC - This new OM record data communication events per OSSAIN nodes
- OAPCALP1-OAPCALP4 - These new OMs record the number of times each incoming and outgoing call processing operation and response is used on a per session pool basis.
- OAPMERRN - This new OM records the number of times a specific error occurs in node maintenance messages on a per node basis.
- OAPMERRS - This new OM records the number of times a specific error occurs in call processing and session pool maintenance messages on a session pool basis.

OSSAIN Initial Release (continued)

- OAPMTYPN - This new OM records the number of times each node maintenance message type is used on a node basis.
- OAPMTYPS - This new OM records the number of times each call processing and session pool maintenance message type is used on a session pool basis.
- OAPNMTC - This new OM record the number of times each incoming and outgoing node maintenance operation and response is used on a node basis.
- OAPSPMTC - This new OM record the number of times each incoming and outgoing session pool maintenance operation and response is used on a session pool basis.
- OASNPLDC - This new OM record data communications events for an OSSAIN session pool
- OASVNDCP - This new OM provides peg counts for OSSAIN calls on a session pool basis. It provides counts for all service node call processing activities.
- TOPPACT3 - New ActIDs and registers are added for OSSAIN.
- TOPPDID5 - New DIDs and registers are added for OSSAIN.
- TOPSDA - When a successful transfer from DA to OSSAIN occurs, a new DA Call OM field is pegged directly prior to the transition to OSSAIN. If the transfer to OSSAIN fails a new DA Call OM field is pegged just prior to sending a CALL_STATUS message to the DA system. It is possible therefore to have two separate OM fields pegged for the same call.

Translations table flow

The OSSAIN Initial Release translations tables are described in the following list:

- Table LIUINV provides link interface inventory for EIUs.
- Table IPNETWRK defines IP information for EIUs.
- Table IPROUTER provides IP routing information for EIUs.
- Table IPTHRON defines IP throttling numbers for EIUs.
- Table ENTYPES defines node types.
- Table ENSITES defines node sites.
- Table OANODNAM defines node ids and names.
- Table OANODINV defines OSSAIN node information.
- Table CT4QNAMS selects OSSAIN or operator processing.
- Table QAPLNDEF sets call and agent queue limits.

OSSAIN Initial Release (continued)

- Table OQCQPROF defines OSSAIN agent and call queue profiles.
- Table OASESNPL defines session pools (OSSAIN operator teams) for OSSAIN.
- Table CLLI defines service node voice links.
- Table TRKGRP defines service node voice links.
- Table TRKSGRP defines service node voice links.
- Table TRKMEM defines service node voice links.
- Table OAVLMAP defines voice links between the switch and service nodes.
- Table OAFUNDEF lists OSSAIN functions (services) and the provider.
- Table OACTLDEF contains control lists (sequentially performed OSSAIN services). Currently limited to a list of one service.
- Table DNSCRN receives directory numbers to index into table TOPSDB for blocking functions in control list based on directory (DN).
- Table TOPSDB is indexed from table DNSCRN for index into table OAFUNBLK for blocking functions in control list based on DN.
- Table OAFUNBLK blocks functions defined in table OAFUNDEF, based on DN.
- Table OAFNDISP determines handling of call deflection or overflow, blocked functions, or failure to send a session begin.
- Table OADTFPRF selects services by DTMF digits.
- Table OACAUPRF selects services by ISUP class and cause codes.
- Table OADSCPRF selects services by types of events during post disconnect.
- Table OATLKPRF selects services by types of events during the talking portion of a call.
- Table OACNNNPRF selects services by types of events during call connect.
- Table OATPRFIX provides indices into tables OACNNPRF, OATLKPRF, and OADSCPRF.
- Table OAINCTLA selects trigger profiles and control lists for CT4Qs marked for OSSAIN service nodes. The table contains an optional index into table OATPRFIX.
- Table OAINPARM provides controls for various OSSAIN operations.

OSSAIN Initial Release (continued)

The OSSAIN Initial Release translation process is shown in the flowchart that follows.

OSSAIN Initial Release (continued)

Table flow for OSSAIN Initial Release

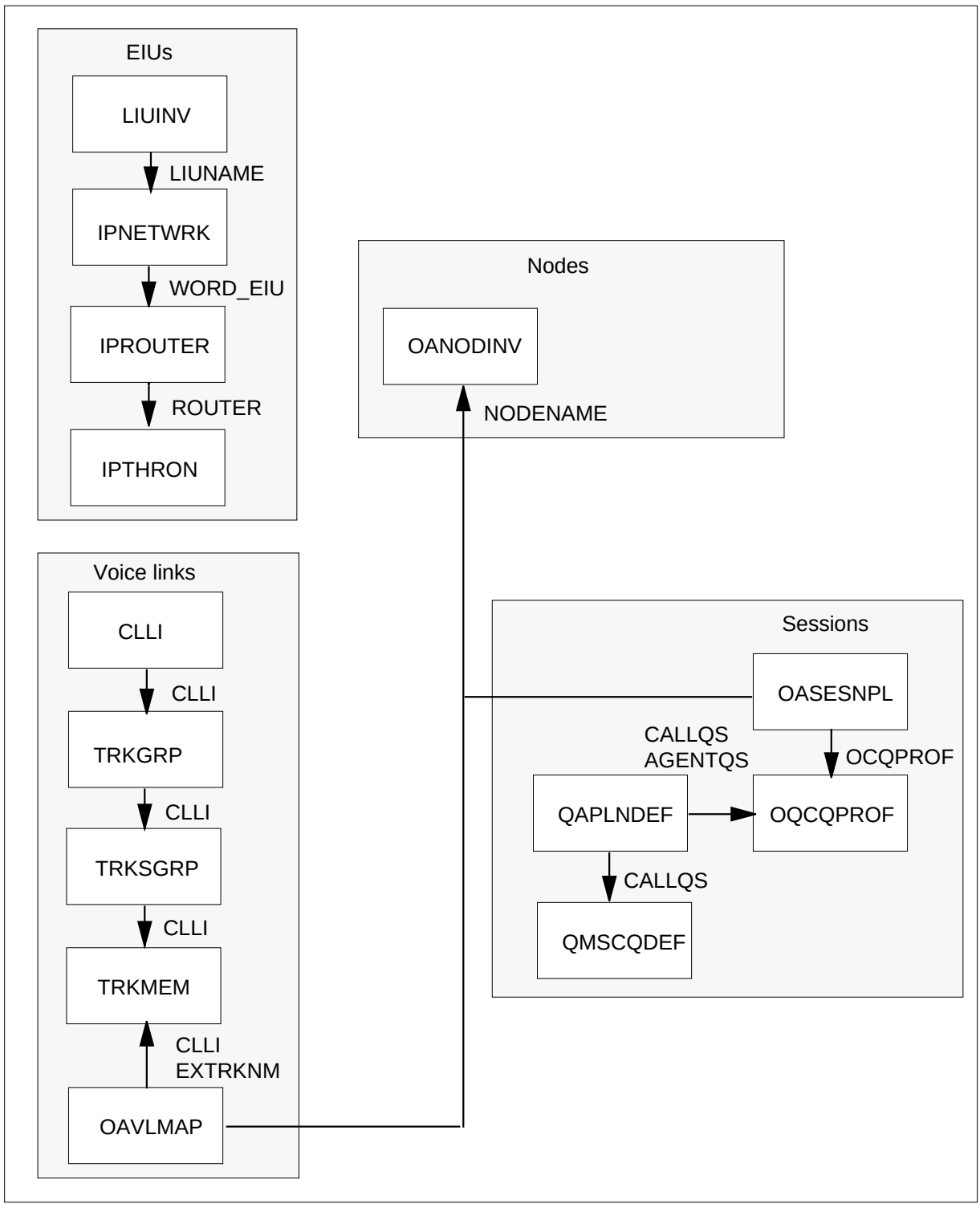

OSSAIN Initial Release (continued)

Table flow for OSSAIN Initial Release(continued)

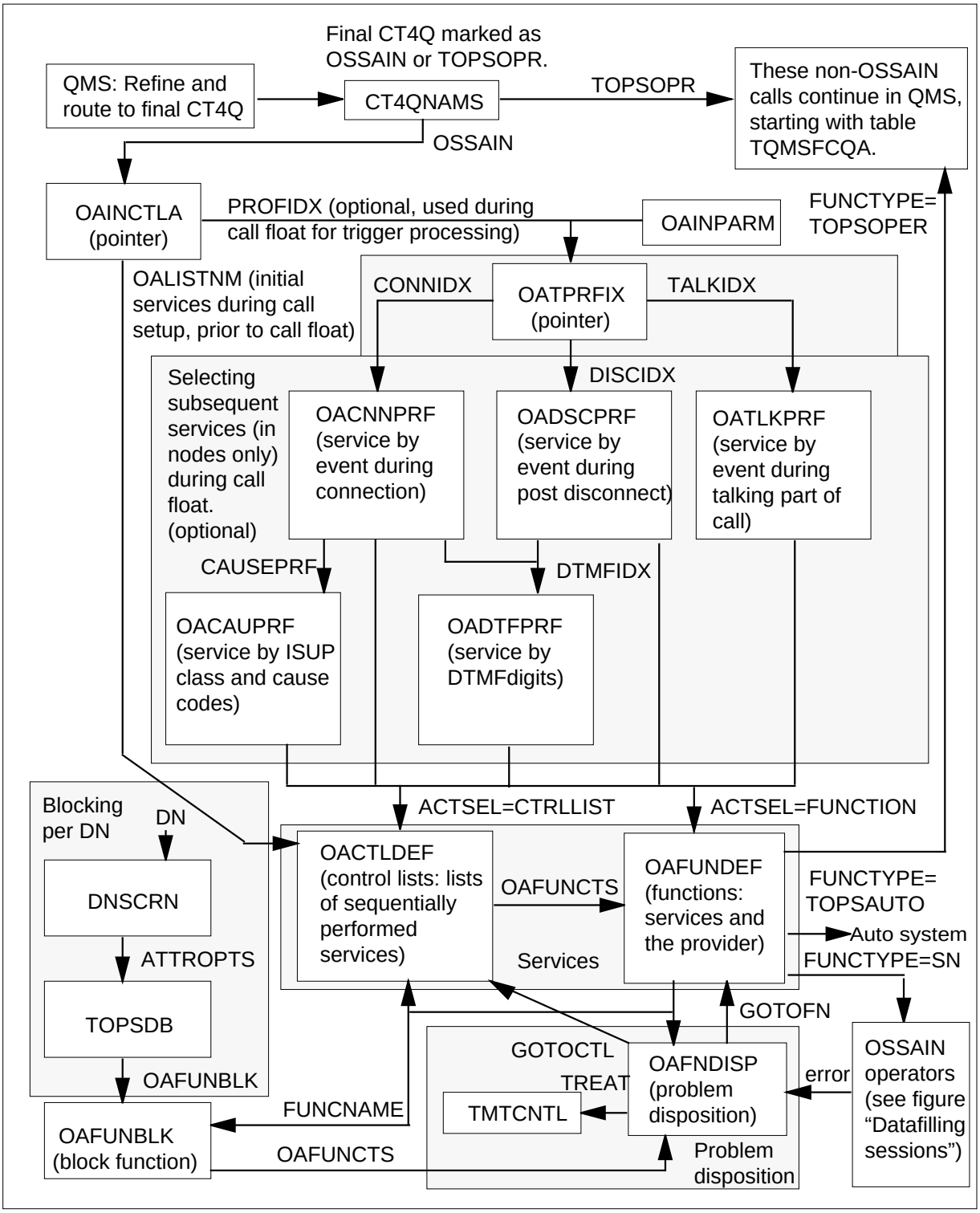

OSSAIN Initial Release (continued)

The following table lists the datafill content used in the flowchart.

Datafill example for OSSAIN Initial Release

Datafill table	Example data
ENTYPES	SN
ENSITES	LOCAL
OANODNAM	0 BRAND_01
OANODINV	BRAND_01 OSNM 1 UDP IPV4 47 245 1 35 9001 Y 2 20 240 60 SN 4 BB 4 LOCAL DURHAM_1
LIUINV	EIU 0 LIM 0 1 12 ETC35nn NTEX22BB NT9X84AA NT9X85AA NO 000075F00000
IPNETWRK	0 47 245 9 1 16 (EIU 0)$ (SCRNFLAG Y)$
IPROUTER	0 EIU 47 245 9 2 47 245 0 21 YES YES
IPTHRON	EIU 0 10 40 CM 25$
CT4QNAMS	2 0+YELLOW N OSSAIN
OASESNPL	0 BRAND_NODE1 100 NODE_1 UDP SUBSCRIBER S USEDEFLT USEDEFLT N 51 UDP 3000 3001
OQCQPROF	0 AQ0 OFC (CQ0)$
CLLI	OSSAINVL1 258 24 OSSAIN_VOICE_LINK_1
TRKGRP	OSSAINVL1 TOPSVL 31 NPDGP NCRT MIDL OG
TRKSGRP	OSSAINVL1 0 DS1SIG STD OG NP IM 0 0 NO NO N N Y 70
TRKMEM	OSSAINVL1 2 0 DCM 0 0 21
OAVLMAP	NODE_1 10 OSSAINVL1 2
OAINCTLA	0+YELLOW 0+YEL Y 7
OAINPARM	OPR_TRIGGER_PROFILE_INDEX Y 7
OATPRFIX	7 Y 4 Y 2 Y 6
OACNNPRF	4 (NOANS F ROUTE_NODE) $ Y 8 Y 3
OATLKPRF	2 (FLASH N N N Y FUNCTION TOLL_OPER) (NTFY Y N N N FUNCTION NEW_ACTS) $ N

Datafill example for OSSAIN Initial Release

Datafill table	Example data
OADSCPRF	6 (PTYD F ROUTE_NODE) Y
OADTFPRF	8 (0 N N FUNCTION TOLL_OPR) (STAR N N FUNCTION MDS_NODE)
OACAUPRF	3 (NORM 17 F NDS_NODE)
OACTLDEF	0 0+YEL 3 YELLOW_PAGES
OAFUNDEF	YELLOW_PAGES OSSAIN Y CQ0
OAFNDISP7	YELLOW_PAGES TREAT VACT GOTOFN YELPGS_OPER GOTOCTL CTLLIST3 TREAT VACT
DNSCRN	6193229801 TOPSDB 1
TOPSDB	1 0 0 0 0 1
OAFUNBLK	1 INCLUDE BRANDING NODE_AABS YELLOW_PAGES$

Limitations and restrictions

The following limitations and restrictions apply to OSSAIN Initial Release:

Call float

The DMS switch performs call floated trigger processing[1]* for OSSAIN calls in the call floated state. The following restrictions/limitations apply for calls in the floated state:

- Call floated trigger datafill and processing cannot be used to route the call to an operator, TOPS automated system (that is, ACTS, MCCS or AABS), or treatment as a blocked OSSAIN function. An OAIN303 log is produced if one of these conditions is encountered during call floated trigger processing. Note, table OAINPARM is used to route calls floated after MCCS or AABS to OSSAIN.
- If a call is floated prior to reaching the last function in a control list, the remaining functions in that control list are not processed. Subsequent OSSAIN processing can only be initiated by a call floated trigger event.
- If a trigger is hit while outpulsing to a forward connection (for example, calling party keys a DTMF digit), the forward connection is released. This prevents calls from arriving at a node in a partially connected state. The

[1] * Call floated trigger processing is performed according to the OSSAIN trigger datafill tables. This includes tables OAINCTLA, OATPRFIX, OADSCPRF, OATLKPRF, OACNNPRF, OADTFPRF, and OACAUPRF.

OSSAIN Initial Release (continued)

forward DN is part of the call context so the service node has the ability to establish the forward connection when it has control of the call.

Calls floated by ACTS do not receive OSSAIN trigger processing. This restriction is necessary due to possible coin recalls during the talking and disconnect points in a call.

A hookswitch flash event from a subscriber may not always be propagated to the TOPS DMS switch for trigger processing due to the custom calling feature environment available in the network.

Datafill

The following limitations apply to OSAC which is not supported. (OSAC is supported in functionality OSSAIN 07 Enhancements, OSAN0003.)

- OSSAIN Centralization is not supported.
- Reporting of service node originated logs and alarms on the DMS switch is not supported.
- In table OANODINV, field ONPMTYPE, values OSN, OSNM, and OSAC are listed on the DMS switch. However, only OSNM is supported.
- In table OASESNPL, field ORIGTYP, value OSAC is not supported.
- In table OASESNPL, field SWTCHTYP, only value S is supported.
- In table OAFUNDEF, field CAMHERE, only value Y is supported.

A maximum of 32 nodes can be datafilled per OSSAIN PM type.

There are restrictions for datafilling tables EXNDINV and OANODINV. Refer to the datafill procedure section of this document for details of those restrictions.

The maximum number of functions that can be datafilled in table OAFUNDEF is 1022.

The maximum number of session pools that can be datafilled in table OASESNPL is 4094.

In table TRKGRP, a TOPSVL trunk must have a selection sequence of most idle (MIDL), even though OSSAIN ignores this since the service node selects the voice link.

In table TRKSGRP, a TOPSVL trunk must have a direction of outgoing (OG), an outpulsing type of no pulse (NP), an immediate start signal (IM), and Remote Make Busy (RMB) must be set to Y.

OSSAIN Initial Release (continued)

The maximum number of control lists that can be datafilled in table OACTLDEF is 4095. Each control list can consist of 1 function (for the initial release in TOPS06), which must first be datafilled in table OAFUNDEF.

In table OACTLDEF, field OAFUNCTS, only one function is supported.

The maximum number of indices which can be datafilled in table OAFUNBLK is 1K. Each index specifies a list of 0 to 5 functions to be excluded or included for that index (which is obtained from a DN). `Excluded' means that all functions in table OAFUNDEF are allowed except for the datafilled ones. `Included' means that only the functions listed are valid for that index.

The service from the ORIGSERV field in table OAFUNDEF is not applied to calls originated by the service node and the service is not applied to calls transferred by the service node or operator.

The No Charge (NC) field, in tables TDBCLASS and SPLDNID, is currently not processed by OSSAIN.

In tables TDBCLASS and SPLDNID, No Charge is an option by Directory Number that can be set for hotel calls. When No Charge is set to N, the room number is only required for the call if the call is to be billed to the calling station (that is, the room phone). When No Charge is set to Y, the room number is required regardless of how the call is to be billed, in which case the hotel is likely to be charging the user an access fee for using the phone.

In table OAFUNDEF, field AUTOSYS, only value AABS is supported. Values ACTS, ACCS, and BRANDING are not supported.

Transfers

If a call recalls to a service node as the result of a trigger or if a called party is connected, the service node should not transfer this call to an operator. If the service node attempts this transfer, the called party is released and an AMA record is automatically generated along with an OAIN604 log. Alternatively, the node can request a `GEN AMA' to complete billing for the call, and then transfer to an operator.

Calls cannot be transferred to the LATA Equal Access System (LEAS).

Calls transferred to an interLATA carrier are not eligible for OSSAIN trigger processing.

OSSAIN Initial Release (continued)

For calls transferred between TOPS MP positions and OSSAIN:

- Transition from the TOPS MP to the SN do not have context information passed from the TOPS MP terminal.
- Calls that transition to a TOPS MP position do not have Context Block or Custom AMA information passed to the position.

  Although a TOPS MP has the above limitations, the MPs can still be utilized for operator backup.

Transitions to AABS (similar to current AABS Handoff) require the following conditions:

- The incoming facility is configured to allow AABS.
- The calling number is present.
- The called number is present.
- The billing method is established.
- The billed number passes validation checks.
- Equal access checks must pass.
- Room number is obtained for hotels that require room number.
- The call must not be marked as DA or Intercept.
- The billed number is not an overseas number.
- The call must not be marked for notify.

When a call with both originating and terminating parties is routed to treatment, the terminating party is released. Only the originating party receives the treatment.

The following conditions must exist for an operator to transfer a call to an OSSAIN control list:

- The service type is TA.
- The type of automatic call distribution (ACD) is QMS.
- The call origination type (table TOPS) is one of the following:
  - UNSPEC (unspecified)
  - OH (operator handled, 0-)
  - OA (operator assisted)
  - DD (direct dialed, 0+)
  - DELAY

— 555

— TS (toll station)

— TSUB (toll subscriber)

— 211, 311, 411, 511, 611, 711, 811, 911, 999

— HOM555 (home 555)

— FOR555 (foreign 555)

— SPARE1, SPARE2, SPARE3, SPARE4, SPARE5

— INTS (service intercept)

- The class charge is one of the following:

  unspecified, person paid, person collect, person special calling, person special called, station paid, station collect, station special calling, station special called, auto collect

- The equal access route status must indicate that operator services should be provided for this call.
- AMA verification is not in progress (no validation query outstanding).
- The call cannot be one of the following types:

  billed coin, billed hotel, notify, time and charges, DA, or intercept

- If a class charge is entered, a billing number must also be entered. Then, the operator must either enter the billing number or remove the class charge for the transfer to succeed.
- If a 4 digit pin is entered in the Special number field, a called number must also be present. Then, the operator must either enter the called number or remove the special number for the transfer to succeed.

For calls transferred from directory assistance to OSSAIN:

- The size of the context information is fixed and limited by the Nortel Standard DA Protocol.
- This capability is not supported for the IBM-DA Protocol.
- Context information that is being transferred, must be compatible between the nodes and terminals involved in processing the information. Context information is about the service to be passed from DA to the node.
- If OSSAIN is not enabled by SOC, the Transfer With Context message is rejected by means of a Call Status message indicating an `Invalid Service'.
- Attempts to redirect calls from coin or hotel station calls from DA to OSSAIN cause the DMS switch to close out pending AMA associated with directory assistance, and changes the call to TA. The DMS switch changes

OSSAIN Initial Release (continued)

the class charge to unspecified, and forces the call to be sent-paid restricted billing, prior to transferring to the OSSAIN service node.

- This capability should not be used in conjunction with intercept call completion scenarios.

The service node cannot transfer DA calls to a toll and assist operator.

ADACC calls requiring alternate billing by an OSSAIN service node must be sent to a service node by an OSSAIN control list. Routing an ADACC call to an operator by a control list is disallowed, and if this occurs, the call is re-routed to an existing AABS node, if available.

Supported capabilities

OPP-compatible and TOPS MP positions are supported. TOPS IV positions are not supported for OSSAIN calls transferred from the service node to an operator. If an OSSAIN call is routed to a TOP IV position, the call is rerouted to treatment. However, a TOPS IV position can still receive 0- traffic which can then be directed to an OSSAIN control list.

R2 signaling is not supported. Refer to functionality R2 on TOPS, GOS00001.

Outgoing OP trunks are not supported. Refer to functionality TOPS E911, OSB00101.

Enhanced 800 is not supported. Refer to feature AL0249, 800+ Capability for Bell Canada.

The OPP compatible position may only provide a maximum of 62 charge adjust services unless a Gen AMA function is used before the limit is reached.

OAP currently does not support hotel room number collection, and thus OSSAIN cannot support the above functionality. If any hotel calls on a given trunk group require a room number, all hotel calls on that trunk group must be routed to existing TOPS (non-OSSAIN) functionality. Note that this likely involves the use of QMS refinements.

Billing

Only the following call codes are supported: 190, 191, 192, 193, 196 and 197.

The size of an AMA record is limited to 2K bytes. This includes the size of the structure and all appended modules. To ensure the 2K limit is not exceeded, this functionality enforces an 800 byte limit on the total number of bytes the Service Node Formatted modules can take up. A counter in the switch tabulates the storage used by the Service Node Formatted modules. For each

Service Node Formatted - Small module appended, the counter is incremented by 26 bytes. And, the counter is incremented by 76 bytes for each Service Node Formatted - Large module appended. If processing an Append AMA Module request would result in the counter overrunning the 800 byte limit, the request is not performed and the switch returns an error response.

Interactions

The following paragraphs describe the interactions between OSSAIN Initial Release and other functionalities.

This functionality uses the QMS call and agent manager (CAM) to achieve its functionality. A new QMS application is created for OSSAIN with its own set of call and agent queues. This interaction does not adversely affect the existing TOPS QMS functionality.

The service node must send a Generate AMA Record request to generate a billing record when performing multiple instances of the same service. Then the DMS switch generates an AMA record at call termination and at the end of call completion. Therefore, for single service calls or for the last service performed in a call, where multiple services are performed, the service node does not need to perform a Generate AMA Record request.

The existing TOPS EBAF Phase 2 capabilities are extended but not changed.

For transfers from the service node to an interLATA carrier, there is interaction with the TOPS InterLATA Carrier System (TICS), functionality TOPS InterLATA Carrier (OSEA0101).

DA to OSSAIN transfers

Directory Assistance interacts with OSSAIN using the Nortel Standard DA Protocol.

A possible example of the usage of this new generic capability is the Non-Published Automated Message Delivery service (NPAMD).

Call float interactions with a service node

The Service Node can float the call under one of the following conditions:

- prior to connecting to the forward party
- after connecting to the forward party, but prior to answer
- once the parties are connected and talking

OSSAIN Initial Release (continued)

Call float interactions with an operator

The Operator has two options when attempting to float a call.

1. The operator can either connect the parties prior to the float operation or
2. The operator can connect the parties as part of the float operation.

If the operator performs option one and connects the parties prior to float, the DMS switch starts trigger processing when the parties are in the talking state following the reception of answer from both the terminating party and call float from the operator. No attempt is made to deny the float request from an operator prior to answer.

If the operator performs option two and connects the parties as part of the float operation, the DMS switch immediately starts trigger processing as part of the float request.

Operator keyed notifications take precedence over the float trigger notification timer. Similarly, time and charge notifications at disconnect take precedence over the disconnect trigger events.

Activation/deactivation by the end user

OSSAIN Initial Release requires no activation or deactivation by the end user.

Billing

For directory assistance calls transferred to OSSAIN, AMA billing is closed out after completion of DA and then the call is reclassified as Toll and Assist prior to transfer to OSSAIN. If there are any restrictions to the calling party, such as a coin or hotel origination, the DMS switch changes the class charge to unspecified, and forces the call to sent-paid restricted billing.

TOPS and OPP-compatible positions can append custom billing modules to the AMA record in the DMS. TOPS uses Expanded Bellcore AMA Format (EBAF) for its AMA recording. And, EBAF phase two is used which makes use of the latest Bellcore defined structure codes, call codes and module codes.

Structure codes

OSSAIN calls uses the following existing TOPS structure codes:

- 0751 - Used for calls originating on an intertoll (IT) or Access Tandem to Carrier (ATC) trunk from a corporate entity utilizing the North American dialing plan.
- 0752 - Used for calls originating on a Remote Operator Number Identification (RONI) trunk or TOPS trunk directly from an end office utilizing the North American dialing plan.

- 0106 - Used for Open Numbering Plan Environment (ONPE) calls originating from a subscriber. Calls arrive on TOPS trunks.
- 0107 - Used for Open Numbering Plan Environment calls that do not originate from a subscriber. Calls arrive on IT trunks.

Call codes

OSSAIN calls use the existing set of TOPS call codes:

- Call Code 189 - Originating with credit recording service. Also, OSSAIN now allows AMA module codes 186 and 187 to be appended to the AMA record with call code 189.
- Call Code 190 - Originating with carrier identification processing, but no service processing.
- Call Code 191 - Terminating with carrier identification, but no service processing.
- Call Code 192 - Originating with call completion service.
- Call Code 193 - Terminating with call completion service.
- Call Code 194 - Originating with listing services service.
- Call Code 195 - Terminating with listing services service.
- Call Code 196 - Originating with general assistance service.
- Call Code 197 - Terminating with general assistance service.
- Call Code 198 - Originating with busy line verification service.
- Call Code 199 - Terminating with busy line verification service.
- Call Code 215 - Intercept service.

For the initial release (TOPS06), only the following call codes are supported: 189, 190, 191, 192, 193, 196 and 197.

Module codes

The existing TOPS module codes are used along with the following new module codes:

- Module 184 - Service Node ID
- Module 185 - Service ID
- Module 186 - Service Node Formatted - Small
- Module 187 - Service Node Formatted - Large

OSSAIN Initial Release (continued)

Module code 184 - Service node ID

This module records information on a service node and is replicative. This module is appended for each service node involved in a call. The maximum number of service nodes allowed in a call can be determined by the MAX_ALLOWED_TRANSITIONS parameter in table OAINPARM. Following is the information in the module:

Module code 184

Information	Field number	Number of characters
Module code	88	4
Service node ID	105	6
Sequence number	140	6
Service provider elapsed time	403	6
Transactions	130	6

Following is a description of the information:

- Service node ID - This value is datafilled in table OANODINV.
- Sequence number - The sequence when the service node is brought into the call.
- Service provider elapsed time - The connection time at the service node.
- Transactions - The number of outgoing and incoming OAP messages to and from the service node.

Following is an example AMA record with module code 184:

Example AMA record with module code 184

```
HEX ID:AA STRUCTURE CODE:40752C CALL CODE:192C
SENSOR TYPE:036C SENSOR ID:0123456C  REC OFFICE TYPE:036C
REC OFFICE ID:0123456C DATE:40707C TIMING IND:00000C
STUDY IND:0200000C SERVICE OBSERVED:0C ORIG NPA:629C
ORIG NUMBER:5201234C CONNECT TIME:1237548C
ELAPSED TIME:000000036C OPERATOR IDS:0009999009999C
ACC OPERATOR WORK TIME:00000C SERVICE FEATURE:000C
STATION SIGNALING IND:2C SCREENING CODE:000C
CALLED NUMBER INPUT:1C CALLING NUMBER SOURCE:1C
MODULE CODE:051C OVERSEAS IND:0C TERM NPA:00201C
TERM NUMBER:2201234C COMPLETION IND:001C RATE IND:1C
OSS CALL COMPLETION CONDITIONS:3111860C MODULE CODE:185C
SERV CODE:00033C MODULE CODE:184C SERV CODE:00003C
SN SEQUENCE NUMBER:00001C
SMALL INTERVAL ELAPSED TIME:03145C TRANSACTIONS:00007C
MODULE CODE:184C SERV CODE: 00010C
SN SEQUENCE NUMBER:00002C
SMALL INTERVAL ELAPSED TIME:12345C TRANSACTIONS:00002C
MODULE CODE:000C
```

The SERV CODE field in Module 184 records the Service Node ID. The SMALL INTERVAL ELAPSED TIME field records the Service Provider Elapsed Time.

Module code 185 - Service ID

This module records the Network Service ID of the OSSAIN service provided. This module is included in all AMA records for calls utilizing an OSSAIN service. The Network Service ID is datafilled in the NETWRKID field of table OACTLDEF.

This module is not replicative; there is only one instance of this module per record.

The following table provides information for module code 185:

Module code 185

Information	Field number	Number of characters
Module code	88	4
Network service ID	105	6

OSSAIN Initial Release (continued)

Following is an example AMA record with module code 185:

Example AMA record with module code 185

```
HEX ID:AA STRUCTURE CODE:40752C CALL CODE:192C
SENSOR TYPE:036C SENSOR ID:0123456C  REC OFFICE TYPE:036C
REC OFFICE ID:0123456C DATE:40707C TIMING IND:00000C
STUDY IND:0200000C SERVICE OBSERVED:0C ORIG NPA:629C
ORIG NUMBER:5201234C CONNECT TIME:1237548C
ELAPSED TIME:000000036C OPERATOR IDS:0009999009999C
ACC OPERATOR WORK TIME:00000C SERVICE FEATURE:000C
STATION SIGNALING IND:2C SCREENING CODE:000C
CALLED NUMBER INPUT:1C CALLING NUMBER SOURCE:1C
MODULE CODE:051C OVERSEAS IND:0C TERM NPA:00201C
TERM NUMBER:2201234C COMPLETION IND:001C RATE IND:1C
OSS CALL COMPLETION CONDITIONS:3111860C MODULE CODE:185C
SERV CODE:00033C MODULE CODE:184C SERV CODE:00003C
SN SEQUENCE NUMBER:00001C
SMALL INTERVAL ELAPSED TIME:03145C TRANSACTIONS:00007C
MODULE CODE:000C
```

The SERV CODE field in module 185 records the Network Service ID.

Module code 186 - Service node formatted - small

This module records custom billing data from a service node or an OPP-compatible position. Using OAP or OPP, a service node or OPP-compatible position can request the switch to append its formatted billing data to the billing record. The DMS switch is unaware of the contents of the billing data. The knowledge of the data is in the service node and the downstream processor.

This module is replicative. The Service Node Data Identifier field specifies the data format of the Service Node Data - Small field. Hexadecimal is the only data format supported at this time. The size of the Service Node Data - Small field is 20 bytes. For custom billing data that is less than 20 bytes, the data is padded to the right with #Fs to fill the 20 byte field.

This module can be appended to an AMA record multiple times, but there is an 800 byte limit on the total number of bytes the Service Node Formatted modules (Small and Large) can use.

The following table provides information for module code 186:

Module code 186

Information	Field number	Number of characters
Module code	88	4
Service node ID	105	6
Service node data ID	613	2
Service node data - small	614	40

Field 613, Service Node Data Identifier, is a new AMA field with the following definition:

Field 613

Character	Meaning
1	0 = Not used 1 = BCD 2 = EBCDIC 3 = Hexadecimal 4 = ASCII 5-9 = Reserved
2	Sign (Hex C)

Note: For Module 186 and 187, the Service Node Data Identifier is always set to 3 (Hexadecimal).

Field 614, Service Node Data - Small, is a new AMA field with the following definition:

Field 614

Character	Meaning
40	Data from service node

Following is an example AMA record with module code 186:

OSSAIN Initial Release (continued)

Example AMA record with module code 186

```
HEX ID:AA STRUCTURE CODE:40752C CALL CODE:192C
SENSOR TYPE:036C SENSOR ID:0123456C  REC OFFICE TYPE:036C
REC OFFICE ID:0123456C DATE:40707C TIMING IND:00000C
STUDY IND:0200000C SERVICE OBSERVED:0C ORIG NPA:629C
ORIG NUMBER:5201234C CONNECT TIME:1237548C
ELAPSED TIME:000000036C OPERATOR IDS:0009999009999C
ACC OPERATOR WORK TIME:00000C SERVICE FEATURE:000C
STATION SIGNALING IND:2C SCREENING CODE:000C
CALLED NUMBER INPUT:1C CALLING NUMBER SOURCE:1C
MODULE CODE:051C OVERSEAS IND:0C TERM NPA:00201C
TERM NUMBER:2201234C COMPLETION IND:001C RATE IND:1C
OSS CALL COMPLETION CONDITIONS:3111860C MODULE CODE:185C
SERV CODE:00033C MODULE CODE:184C SERV CODE:00003C
SN SEQUENCE NUMBER:00001C
SMALL INTERVAL ELAPSED TIME:03145C TRANSACTIONS:00007C
MODULE CODE:186C SERV CODE:00010C SERVICE NODE DATA
IDENTIFIER:3C SERVICE NODE DATA SMALL:
000048454C5021204920414D2054524150454421 CODE:000C
```

The SERV CODE field in module 186 records the Service Node ID.

Module code 187 - Service node formatted - large

This module records custom billing data from a service node or an OPP-compatible position. Using OAP or OPP, a service node or OPP-compatible position can request the switch to append its formatted billing data to the billing record. The DMS switch is unaware of the contents of the billing data. The knowledge of the data is in the service node and the downstream processor.

This module is replicative. The Service Node Data Identifier field specifies the data format of the Service Node Data - Large field. Hexadecimal is the only data format supported at this time. The size of the Service Node Data - Large field is 70 bytes. For custom billing data that is less than 70 bytes, the data will be padded to the right with #Fs to fill the 70 byte field.

This module can be appended to an AMA record multiple times, but there is an 800 byte limit on the total number of bytes the Service Node Formatted modules (Small and Large) can use.

The following table provides information for module code 187:

Module code 187

Information	Field number	Number of characters
Module code	88	4
Service node ID	105	6
Service node data ID	613	2
Service node data - large	615	140

Field 615, Service Node Data - Large, is a new AMA field with the following definition:

Field 615

Character	Meaning
140	Data from service node

Following is an example AMA record with module code 187.

OSSAIN Initial Release (continued)

Example AMA record with module code 187

```
HEX ID:AA STRUCTURE CODE:40752C CALL CODE:192C
SENSOR TYPE:036C SENSOR ID:0123456C  REC OFFICE TYPE:036C
REC OFFICE ID:0123456C DATE:40707C TIMING IND:00000C
STUDY IND:0200000C SERVICE OBSERVED:0C ORIG NPA:629C
ORIG NUMBER:5201234C CONNECT TIME:1237548C
ELAPSED TIME:000000036C OPERATOR IDS:0009999009999C
ACC OPERATOR WORK TIME:00000C SERVICE FEATURE:000C
STATION SIGNALING IND:2C SCREENING CODE:000C
CALLED NUMBER INPUT:1C CALLING NUMBER SOURCE:1C
MODULE CODE:051C OVERSEAS IND:0C TERM NPA:00201C
TERM NUMBER:2201234C COMPLETION IND:001C RATE IND:1C
OSS CALL COMPLETION CONDITIONS:3111860C MODULE CODE:185C
SERV CODE:00033C MODULE CODE:184C SERV CODE:00003C
SN SEQUENCE NUMBER:00001C
SMALL INTERVAL ELAPSED TIME:03145C TRANSACTIONS:00007C
MODULE CODE:187C SERV CODE:00010C  SERVICE NODE DATA
IDENTIFIER:3C SERVICE NODE DATA
LARGE:000000574859204152452059 4F55204445434F44494E47205448
495320444154413F204745420412 04C494645212020
4C495645204C4F4E4720414E442050524F5350455221
MODULE CODE:000C
```

The SERV CODE field in module 187 records the Service Node ID.

Custom AMA enhancement

Custom AMA data is appended to the Call Code 189 (Originating with credit recording service) AMA record for the TOPS Charge Adjust service. If the OPP compatible position wishes to append custom AMA with the Charge Adjust AMA record, it must send the custom AMA data prior to providing the service. Similarly, if the service node wishes to append any custom AMA with the Charge Adjust AMA record, it must send the custom AMA data prior to transferring to an OPP compatible position that provides the service.

The attached data is module codes 186 (Service Node Formatted - Small) and 187 (Service Node Formatted - Large)

Following is an example AMA record with call code 189.

Example AMA record with call code 189

```
HEX ID:AA  STRUCTURE CODE:40772C  CALL CODE:189C
SENSOR TYPE:036C SENSOR ID:0123456C  REC OFFICE TYPE:036C
REC OFFICE ID:0123456C DATE:00522C  TIMING IND:00000C
STUDY IND:0200000C  SERVICE OBSERVED:0C ORIG NPA:619C
ORIG NUMBER:5200000C  CONNECT TIME:1048392C ELAPSED
TIME:000000000C  OPERATOR IDS:1060211009999C
ACC OPERATOR WORK TIME:00000C  MOD SERV OR EQUIP IND:256C
STATION SIGNALING IND:2C  MODIFIED TRMT IND:256C
CALLED NUMBER INPUT:3C CALLING NUMBER SOURCE:1C
ADDITIONAL SERV INFO:998C  MODULE CODE:311C
ORIG CALL TYPE:002C  MODULE CODE:058C
SERVICE DIFFICULTY DATE:00522C
SERVICE DIFFICULTY TIME:1048392C  OVERSEAS IND:0C
TERM NPA:00201C TERM NUMBER:2200000C  COMPANY ID:FFFFFF
SERVICE DIFFICULTY:0C NUMBER OF OCCURRENCES:001C
CHARGE ADJ INDICATOR:1C AMOUNT OF CREDIT:FFFFFF
MINUTES OF CREDIT:022C  MODULE CODE:187C SERV CODE:00000C
SERVICE NODE DATA IDENTIFIER:3C SERVICE NODE
DATA LARGE: 12345678ABCD
1234567890ABCDEF12345678ABCDAAAABBBBCCCCDDDDEEEEAAAABBBB
CCCCDDDDEEEEAAAABBBBCCCCDDDDEEEEAAAABBBBCCCCDDDDEEEE
AAAAAAAAAAAA4373BBBB MODULE CODE:186C  SERV CODE:00000C
SERVICE NODE DATA IDENTIFIER:3C SERVICE NODE DATA SMALL:
EEEEAAAABBBB CCCCDDDDEEEEAAAABBBBCCCCDDDD
MODULE CODE:310C  KEYING ACTIONS:111111111C
MODULE CODE:104C TRUNK FACILITY ID:104060001C
MODULE CODE:000C
```

Account code billing

For account code billing at an OSSAIN service node, the service node sends the DMS switch a four digit account code in the Alternate Billing Directory Number data block (DB). The four digit account code is then recorded in the standard AMA Account Code billing module. If the account code entered by the subscriber contains less than four digits, the service node pads the account code in front with zeroes. An account code billing call must be class charged as Station Paid by the service node.

Station Message Detail Recording

OSSAIN Initial Release does not affect Station Message Detail Recording.

OSSAIN Initial Release (continued)

Datafilling office parameters

The following table shows the office parameters used by OSSAIN Initial Release. For more information about office parameters, refer to *Office Parameters Reference Manual.*

Office parameters used by OSSAIN Initial Release

Table name	Parameter name	Explanation and action
OFCENG	OSSAIN_NUM_RU	This parameter determines how many OSSAIN recording units (extension blocks) are necessary for processing OSSAIN call traffic. Each OSSAIN call requires an OSSAIN recording unit. An OAIN301 log indicating resource trouble is generated if an OSSAIN recording unit cannot be obtained for a call and the call is routed to a no software resources (NOSR) treatment. The range of this parameter is 0 to 32767. The default is 100. When this functionality is not activated, the value is 0. Activation is immediate for either an increase or a decrease. However, store is not automatically deallocated for a decrease since calls in progress may be using the affected store. A subsequent cold or reload restart is required for store deallocation. *Calculation:* Each active OSSAIN call requires an OSSAIN recording unit. The following calculation can be used as a guideline for determining how many active OSSAIN calls are possible in the switch. This number is used to provision the number of OSSAIN RUs: (% of calls incoming on TOPS trunks that route to OSSAIN) x (number of TOPS trunk group members) + (% of calls incoming on ATC trunks that route to OSSAIN) x (number of ATC trunk group members) + (% of calls incoming on IT trunks that route to OSSAIN) x (number of IT trunk group members) + (the summation of MAXCALLS in all OSSAIN session pools excluding those defined as OSAC origination types) This equation is applicable to both standalone and remote switches.

OSSAIN Initial Release (continued)

Office parameters used by OSSAIN Initial Release

Table name	Parameter name	Explanation and action

		Under provisioning prevents calls from being processed, generates an OAIN301 log, and routes the call to NOSR treatment. Over provisioning allocates memory that is not used.
		
		An allocated RU is held until the call is taken down.
		
		Verification: To verify that OSSAIN recording units have been provisioned sufficiently, use the CI command OMSHOW EXT ACTIVE OSSAINRU. An entry similar to the following is displayed:
		
		`EXTSEIZ EXTOVFL EXTHI EXTSEIZ2 EXTHI2`
		`134 OSSAINRU`
		`100`
		`0 0 1 0`
		`0`
		
		Any nonzero value in field EXTOVFL indicates under provisioning.

OFCENG	CRS_SUBRU_POOL 1_SIZE	Provisioning for this parameter is updated. The extension block governed by this parameter is now used for OSSAIN calls. This extension block is used by AMA to store the Network Service ID of the OSSAIN call. Each call requires only one extension block. The following formula is added to the existing formula: <existing equation> + # of OSSAIN calls

OSSAIN Initial Release (continued)

Office parameters used by OSSAIN Initial Release

Table name	Parameter name	Explanation and action
OFCENG	CRS_SUBRU_POOL 2_SIZE	Provisioning for this parameter is updated. The extension block governed by this parameter is now used for OSSAIN calls. This extension block is used by AMA to store service node information related to OSSAIN calls. An extension block is used for each service node involved in the call. The maximum number of service nodes allowed in a call is determined by parameter MAX_ALLOWED_TRANSITIONS in table OAINPARM. This extension block is also used to store service node formatted billing data (sent through OAP or OPP) that is less or equal to 20 bytes. An extension block is used for each Append AMA Module request that contains AMA data that is less or equal to 20 bytes. The following formula is added to the existing formula: <existing equation> + 1 * (# of OSSAIN calls involve 1 service node) + 2 * (# of OSSAIN calls involve 2 service nodes) + . . . MAX_ALLOWED_TRANSITIONS * (# of OSSAIN calls involve MAX_ALLOWED_TRANSITIONS service nodes) + (MAX_ALLOWED_TRANSITIONS+1) * (# of OSSAIN calls involve (MAX_ALLOWED_TRANSITIONS+1) service nodes) + # of TOPS OSSAIN Append AMA Module requests with AMA data less or equal to 20 bytes.

OSSAIN Initial Release (continued)

Office parameters used by OSSAIN Initial Release

Table name	Parameter name	Explanation and action
OFCENG	CRS_SUBRU_POOL 4_SIZE	Provisioning for this parameter is updated. The extension block governed by this parameter is now used for OSSAIN calls. This extension block is used to store service node formatted billing data (sent through OAP or OPP) that is between 21 to 70 bytes. An extension block is used for each append AMA module request that contains AMA data that is between 21 and 70 bytes. The following formula should be added to the existing formula: <existing equation> + # of TOPS OSSAIN Append AMA Module requests with AMA data between 21 to 70 bytes.

Datafill sequence

The following table lists the tables that require datafill to implement OSSAIN Initial Release. The tables are listed in the order in which they are to be datafilled.

Datafill tables required for OSSAIN Initial Release

Table	Purpose of table
Define the EIUs	
LIUINV	Link interface inventory for EIUs
IPNETWRK	Internet Protocol Network for EIUs
IPROUTER	Internet Protocol Router for EIUs
IPTHRON	Internet Protocol Throttling Numbers for EIUs
Define the nodes	
ENTYPES	External Node Types defines node types for table EXNDINV.
ENSITES	External Node Sites defines node names for table EXNDINV.
OANODNAM	OSSAIN Node Name defines OSSAIN node identifiers and names.
OANODINV	OSSAIN Node Inventory defines OSSAIN node device hardware.
Define the voice links	

OSSAIN Initial Release (continued)

Datafill tables required for OSSAIN Initial Release

Table	Purpose of table
CLLI	Common Language Location Identifier names voice links to service nodes.
TRKGRP	Trunk group defines service node voice links.
TRKSGRP	Trunk subgroup defines service node voice links.
TRKMEM	Trunk Member defines service node voice links.
OAVLMAP	OSSAIN Voice Link Mapping defines voice links between the switch and service nodes.
Route through QMS	
STDPRTCT. STDPRT	Standard Pretranslator Control Subtable provides pretranslations.
QAPLNDEF	QMS Application Definition sets call and agent queue limits.
QMSCQDEF	QMS Call Queue Definition defines call and agent queues.
QMSTOPS	Queue Management System TOPS provides an initial call queue assignment according to the call origination type.
CT4QNAMS	Call Type for Queue Names selects OSSAIN or operator processing.
QMS tables	Calls marked for OSSAIN are routed through QMS, including optional refinement tables. Therefore, new dedicated queues for OSSAIN must be datafilled. Refer to the Host QMS functionality, ADVQ0003, for further details.
OQCQPROF	OSSAIN QMS Call Queue Profile defines agent and call queues for use by OASESNPL.
OASESNPL	OSSAIN Session Pool defines OSSAIN agent pools.
Select services	
OAFUNDEF	OSSAIN Function Definition indicates the OSSAIN service provider.
OAFUNBLK	OSSAIN Function Blocking indicates the functions in OACTLDEF that are blocked per DN by tables DNSCRN and TOPSDB.
TOPSDB	TOPS Data Base associates DN with index into table OAFUNBLK for blocking functions based on DN.
DNSCRN	Directory Number Screening associated DN with index into table TOPSDB for blocking functions based on DN.

OSSAIN Initial Release (continued)

Datafill tables required for OSSAIN Initial Release

Table	Purpose of table
OACTLDEF	OSSAIN Control Lists Definition contains lists of sequentially performed OSSAIN services.
OAFNDISP	OSSAIN Function Definition for treatment of call deflection or overflow, blocking, or failure to send a session begin message.
OADTFPRF	OSSAIN DTMF Profile selects services by DTMF digits.
OACAUPRF	OSSAIN Cause Profile selects services by ISUP class and cause codes.
OADSCPRF	OSSAIN Post Disconnect Profile selects services by types of post disconnects.
OATLKPRF	OSSAIN Talking Profile selects services by types of events during the talking portion of a call.
OACNNPRF	OSSAIN Connecting Profile selects services by types of call connects.
OATPRFIX	OSSAIN Trigger Profile Index provides indices into tables OACNNPRF, OATLKPRF, and OADSCPRF.
OAINCTLA	OSSAIN Control List Assignment selects services and control lists for CT4Qs marked for OSSAIN service nodes.
OAINPARM	OSSAIN Parameters contains parameters for OSSAIN.
TOPSPARM	TOPS Parameters contains a new parameter that displays the called number.

Datafilling table LIUINV

Table LIUINV describes the hardware configuration for all Application Specific Units (ASUs) which includes the EIU. The EIU hardware information is datafilled in this table. A total of eight EIUs are allowed per SuperNode. All eight EIUs may be placed on a single LPP (or FLIS) or they may span across several LPPs.

The following table shows the datafill specific to OSSAIN Initial Release for table LIUINV. Only those fields that apply directly to OSSAIN Initial Release

OSSAIN Initial Release (continued)

are shown. For a description of the other fields, refer to the data schema section of this document.

Datafilling table LIUINV

Field	Subfield or refinement	Entry	Explanation and action
LIUNAME	LIUTYPE	EIU	Datafill a primary and secondary EIU for each host and remote.
CARDINFO	MAC_ ADDRESS	obtain from NORTEL	For EIU and NT9X84AA, the MAC_ADDRESS is unique to each EIU and must be obtained from Nortel

Datafill example for table LIUINV

The following example shows sample datafill for table LIUINV.

MAP display example for table LIUINV

```
LIUNAME     LOCATION     LOAD          PROCINFO
                                                CARDINFO
_____________________________________________________________
EIU 0       LIM  0 1 12  ETC35nn       NTEX22BB
                      NT9X84AA NT9X85AA  NO 000075F00000
```

Datafilling table IPNETWRK

Table IPNETWRK stores all of the Internet specific information about the internet network and SuperNode subnetwork. This table specifies the default EIU router to use when communicating with the DMS switch CM. Each LAN subnet that communicates with the DMS switch CM does so through a primary EIU. A secondary EIU can be designated as an alternative router to the subnet if the primary EIU fails*[2]. If an IP message is destined for a LAN subnet that is not supported by one of the primary EIUs, the default EIU can be used. The default EIU is used anytime the IP routing software resident on the CM determines that a message is not bound for a supported subnet.

In order to datafill this table, the specified EIU must be datafilled in LIUINV, the EIU must be off-line, and the IPROUTER table must be empty.

[2] * Note that the EIUs act as routers between the DMS switch CM and the LAN subnets. The IP address of the DMS switch CM is specified as the destination address when sending a UDP message to the DMS switch.

The following table shows the datafill specific to OSSAIN Initial Release for table IPNETWRK. Only those fields that apply directly to OSSAIN Initial Release are shown. For a description of the other fields, refer to the data schema section of this document.

Datafilling table IPNETWRK

Field	Subfield or refinement	Entry	Explanation and action
KEYREF		0	Enter 0, the only allowable value. This table can only have one tuple.
CMIPADDR		full 4-part IP address	Enter the full 4-part IP address of the CM. IP addresses are obtained from the Network Information Center (NIC) prior to installation by the Operating Company.
SUBNET		number of bits	Enter the number of bits in the subnet mask.
OPTION	WORD_EIU	EIU	An entry for EIU 0 must be datafilled for connection to the network.
PARMAREA		SCRNFLAG Y$	Enter SCRNFLAG Y$.

Datafill example for table IPNETWRK

The following example shows sample datafill for table IPNETWRK.

MAP display example for table IPNETWRK

```
KEYREF    CMIPADDR      SUBNET                    OPTION
                                                  PARMAREA
_____________________________________________________________
0         47 245 9 1    16              (      EIU   0)$
                                                (SCRNFLAG Y)$
```

Datafilling table IPROUTER

This table stores the Internet specific information for each of the eithernet interface units (EIUs) that are acting as internet protocol (IP) routers between the DMS switch computing module (CM) and ethernet local area network (LAN).

Tables LIUINV and IPNETWRK must be datafilled before IPROUTER and the corresponding EIUs referred to in the datafill must be off line.

OSSAIN Initial Release (continued)

The following table shows the datafill specific to OSSAIN Initial Release for table IPROUTER. Only those fields that apply directly to OSSAIN Initial Release are shown. For a description of the other fields, refer to the data schema section of this document.

Datafilling table IPROUTER

Field	Subfield or refinement	Entry	Explanation and action
RKEY		0 to 63	Router key. Add tuples for new EIUs.
SNIPADR		full SuperNode side of EIU 4-part IP address	Enter the full SuperNode side of EIU 4-part IP address. This is the same value as in table IPHOST, field SNADDR, for the EIU.
ETHIPADR		from IPHOST, field LANADOR	Enter LAN side of EIU 4-part IP address. This is the same value as in table IPHOST, field LANADDR, for the EIU.

Datafill example for table IPROUTER

The following example shows sample datafill for table IPROUTER.

MAP display example for table IPROUTER

```
RKEY   ROUTER   SNIPADR      ETHIPADR       ETHARP ETHPARP
-------------------------------------------------------------
  0     EIU    47 245 9 2   47 245 0 21     YES     YES
```

Datafilling table IPTHRON

The IP throttling numbers are datafilled in this table. IP messages between the CM and EIU require throttling in order to control congestion in the Local Message Switch (LMS) of the LPP and the Message Switch (MS) of the SuperNode. The throttling numbers datafilled in IPTHRON controls this throttling.

The following table shows the datafill specific to OSSAIN Initial Release for table IPTHRON. Only those fields that apply directly to OSSAIN Initial

Release are shown. For a description of the other fields, refer to the data schema section of this document.

Datafilling table IPTHRON

Field	Subfield or refinement	Entry	Explanation and action
LMSNODE	LIUNAME	EIU	Add EIUs to prevent bottlenecks in IP communications.
TXCAPCT and RXCAPCT		0 to 32767	Transmit and receive capacity in Kbits/sec The IP throttling numbers for EIUs datafilled in LIUINV default to zero which is 100% throttling (that is, value 0 means no data is transmitted). Which means, the EIU cannot communicate with the CM across the DS30 (DS512) links. Each throttling number must be changed to a non-zero number to allow communication.

Datafill example for table IPTHRON

The following example shows sample datafill for table IPTHRON.

MAP display example for table IPTHRON

```
LMSNODE   TXCAPCT    RXCAPCT                    OPTION
-------------------------------------------------------
EIU  0    10         40                         CM 25$
```

Datafilling table ENTYPES

The following table shows the datafill specific to OSSAIN Initial Release for table ENTYPES. Only those fields that apply directly to OSSAIN Initial Release are shown. For a description of the other fields, refer to the data schema section of this document.

Datafilling table ENTYPES

Field	Subfield or refinement	Entry	Explanation and action
ENTYPE		aphanumeric (1 to 12 characters)	External node type. This table is not changed. Enter a tuple for each node type used in table OANODINV.

OSSAIN Initial Release (continued)

Datafill example for table ENTYPES

The following example shows sample datafill for table ENTYPES.

MAP display example for table ENTYPES

```
ENTYPE
------------------------------------------------------
SN
```

Datafilling table ENSITES

The following table shows the datafill specific to OSSAIN Initial Release for table SITES. Only those fields that apply directly to OSSAIN Initial Release are shown. For a description of the other fields, refer to the data schema section of this document.

Datafilling table ENSITES

Field	Subfield or refinement	Entry	Explanation and action
ENSITE		aphanumeric (1 to 12 characters)	External node site. This table is not changed. Enter a tuple for each node site used in table OANODINV.

Datafill example for table ENSITES

The following example shows sample datafill for table ENSITES.

MAP display example for table ENSITES

```
ENSITE
------------------------------------------------------
LOCAL
SN_SITEA
```

Datafilling table OANODNAM

OSSAIN node name is a new table that contains the network wide node identifiers and associated node name of each node known by the switch where the datafill is taking place.

Table OANODNAM must be datafilled before table OANODINV since node names definded in OANODNAM are used in OANODINV.

The following table describes the fields.

Datafilling table OANODNAM

Field	Subfield or refinement	Entry	Explanation and action
NODEID		0 to 767	Node identifier. This is the key field that is the OSSAIN node identifier. Identifiers must be unique. This field allows for 256 OSNM nodes with this functionality. Datafill a tuple for each service node that this switch (with this table) communicates. Functionality OSSAIN 07 Enhancements, OSAN0101, also allows for OSAC and OSN nodes.
NODENAME		alphanumeric (up to 12 characters)	Node Name. This field defines a unique node name associated with the node identifier. This name is used by other tables. It is recommended that the same node name be used when datafilling a service node in different switches.

Datafill example for table OANODNAM

The following example shows sample datafill for table OANODNAM.

MAP display example for table OANODNAM

```
NODEID     NODENAME
-------------------------------------------------------
1          BRAND_01
2          DEBIT_01
3          AABS_01
```

Datafilling table OANODINV

OSSAIN Node Inventory maps an OSSAIN node identifier to a unique node name. OANODINV defines the transport layer protocol to be used for messaging to the given node and specifies protocol related network address information. This table also provides a means for datafilling OSSAIN node specific information.

This table was introduced in TOPS06 and only supported OSNM nodes.

For release TOPS07, table EXNDINV is no longer used for OSSAIN. The OSSAIN information is moved into modified table OANODINV. Table

OSSAIN Initial Release (continued)

OANODINV is changed to support OSN and OSAC nodes. However, OSN and OSAC are only supported by functionality OSSAIN 07 Enhancements, OSAN0101. Also, field NODEID is moved to table OANODNAM.

The following is a description of the table:

Datafilling table OANODINV

Field	Subfield or refinement	Entry	Explanation and action
NODENAME		alphanumeric (up to 12 characters)	Node Name. This is the key field. This name defines a unique node name associated with the given node identifier. This name is used by other tables. It is recommended that the same node name be used when datafilling a service node in different switches. This name is used by other tables. This field allows for 256 OSNM nodes. Datafill a tuple for each node that this switch (with this this datafill) communicates.
NODEAREA		see subfield ONPMTYPE	Node area. This field consists of subfield ONPMTYPE and refinements.
	ONPMTYPE	OSNM	OSSAIN node peripheral module type. The only allowed values for this functionality is OSNM (OSSAIN node maintained). This value is assigned in a host switch to service nodes that are maintained by this host switch. Values OSN and OSAC are supported by functionality OSSAIN 07 Enhancements, OSAN0101. Datafill refinements ENNODENO, PROTOCOL_AREA, FAIL_DET, AUDFREQ, TSTTIME, RTSTIME, ONODTYPE, ONODLOC, ONODSITE, and ONODINFO.
	ENNODENO	0 to 255	External node number. This field uniquely identifies the external node number of the external node peripheral module type.
	PROTOCOL_ AREA	see subfield PROTOCOL	Protocol area. This field consists of subfield PROTOCOL.
	PROTOCOL	UDP	Protocol. The protocol for transport layer messaging. UDP is the only valid entry. Datafill refinements ADDRESS_AREA and NMTCPROT.

Datafilling table OANODINV

Field	Subfield or refinement	Entry	Explanation and action
	ADDRESS_AREA	see subfield ADDRTYPE	Address area. This field consists of subfield ADDRTYPE.
	ADDRTYPE	IPV4	Internet protocol address type. The only valid entry is IPV4 (IP version 4). Datafill refinement IPV4ADDR.
	IPV4ADDR	4 numbers, each 0-255	Internet protocol version 4 address. Enter the IP address for the node.
	NMTCPORT	1024 to 32767	Node maintenance processing port. This field is the port number for sending a node class message to the service node. Call processing and session pool ports are datafilled in table OASESNPL. Refer to service node documentation or the developer for port number assignment.
	FAIL_DET	see subfield FDETECT	Failed message detection. This field consists of subfield FDETECT.
	FDETECT	Y or N	Failed message detection. This field indicates that failed message detection is enabled (Y) or not (N). If set to Y, the count is checked periodically according to field AUDFREQ. The default is N. If FDETECT = Y, datafill subfield FTHRESH.
	FTHRESH	0 to 100	Failed message threshold. If FDETECT = Y, datafill this field. Enter the maximum percent of failed messages (do not meet OAP specifications) received from an external node before the DMS switch takes action. If ONPMTYPE = OSNM, the external node is system busied by the DMS switch. If ONPMTYPE = OSN, the connection to the external node is system busied.
	AUDFREQ	20 to 600	Audit frequency. Enter the number of seconds between node audits. The default is 20.

OSSAIN Initial Release (continued)

Datafilling table OANODINV

Field	Subfield or refinement	Entry	Explanation and action
	TSTTIME	20 to 600	Test message time. This is the number of seconds that the DMS switch waits for a response after sending a TST message to an OSNM node or one of its session pools. If this time expires and no reply is received, the TST attempt fails. The default is 20.
	RTSTIME	20 to 600	Return to service time. This is the number of seconds that the DMS switch waits for a response after sending a RTS message to an OSNM node or one of its session pools. If this time expires and no reply is received, the RTS attempt fails. The default is 20.
	ONODTYPE	name from table ENTYPES	OSSAIN node type. This field describes the type of node being datafilled. The value must be previously datafilled in table ENTYPES.
	ONODLOC	see subfields	OSSAIN node location. This field consists of subfields FLOOR, ROW, and POSITION. These subfields identify the exact location of the node at the site.
	FLOOR	0 to 99	Floor number where the node is located.
	ROW	alphanumeric (up to 2 characters)	Row number on the floor where the node is located.
	POSITION	0 to 99	Bay position number in the row where the node is located.
	ONODSITE	name from table ENSITES	OSSAIN node site. This field describes the site where the node being datafilled is located. The value must be previously datafilled in table ENSITES.
	ONODINFO	alphanumeric (up to 20 characters)	OSSAIN node information. This field is used for describing the node being datafilled. This information is displayed on the node maintenance MAP display when this node is posted. This field is used for documentation purposes only.

Datafill example for table OANODINV

The following example shows sample datafill for table OANODINV.

MAP display example for table OANODINV

```
NODENAME  NODEAREA
-------------------------------------------------------------------
SN_01     OSNM 0 UDP IPV4  47 245 1 34  7001 Y 2 20 240 60 SN
                                          4 BB 3  LOCAL RTP_1
SN_02     OSNM 1 UDP IPV4  47 245 1 35  9001 Y 2 20 240 60 SN
                                          4 BB 4  LOCAL  RTP_2
```

Error messages for table OANODINV

The following error messages apply to table OANODINV.

Error messages for table OANODINV

Error message	Explanation and action
The specified onpmtype and ennodeno combination is currently in use by another node. The onpmtype and ennodeno combination must be unique in table OANODINV.	Nodes datafilled in table OANODINV must have a unique combination of ONPMTYPE and ENNODENO. If a node is datafilled specifying an ONPMTYPE / ENNODENO combination that is already in use by another OSSAIN node, this error message is displayed.
The OSSAIN node PM type, ONPMTYPE, can not be modified. This node must be deleted and reentered if an ONPMTYPE change is desired.	The OSSAIN node PM type of a node datafilled in table OANODINV cannot be changed. If an attempt to change the ONPMTYPE is made, the error message is displayed.
OSSAIN node names must be unique.	The node name (NODENAME) datafilled in OANODINV must be unique. If it is not, this message is displayed.
This node name is in use in table XXXXXXXX. You must remove all references to this node before you can delete it. Where XXXXXXXX is the name of the table using the node name.	Tuples may not be deleted from table OANODINV until all references to that node name are removed from tables OASESNPL, OAVLMAP, and OSCVLGRP. This error message is displayed if an attempt is made to delete a node name from OANODINV that is in use by any of these tables.

OSSAIN Initial Release (continued)

Error messages for table OANODINV

Error message	Explanation and action
`Only OSNM PM types are currently supported.`	The OSSAIN node PM type (ONPMTYPE) datafilled in OANODINV must be of type OSNM. If this is not the case, the error message is displayed. Types OSN and OSAC are supported by functionality OSSAIN 07 Enhancements, OSAN0101.
`The specified IP address is currently in use by another node. IP addresses must be unique.`	IP addresses datafilled in table OANODINV must be unique. If a duplicate IP address is datafilled, this message is displayed.
`You have not requested that failed message detection be enabled for this node. It is recommended that FDETECT be set to Y to enable failed message detection.`	If failed message detection is not requested (FDETECT = N) the message is displayed. Note, this is a warning, not an error. This datafill is still allowed.
`This node must be off-line before its entry in table OANODINV can be modified. The change will not be performed.`	A node must be in an off-line state in order to change its entry in table OANODINV is made. If an attempt is made to change a node's entry and the node is not off-line, the error message is displayed.
`This node must be off-line before it can be deleted from table OANODINV. The deletion will not be performed.`	A node must be in an off-line state before it can be deleted from table OANODINV. If an attempt is made to delete a node and the node is not off-line, the error message is displayed.
`Node type in field ONODTYPE has not been datafilled in table ENTYPES.`	The node type datafilled in field ONODTYPE must be previously datafilled in table ENTYPES. If an attempt is made to datafill field ONODTYPE with a node type that has not been datafilled in table ENTYPES, this message is displayed.
`Node site in field ONODSITE has not been datafilled in table ENSITES.`	The site name datafilled in field ONODSITE must be previously datafilled in table ENSITES. If an attempt is made to datafill field ONODSITE with a site name not datafilled in table ENSITES, this message is displayed.

Datafilling table CLLI

This table is not changed. Datafill dedicated trunk groups for voice channels between the switch and service nodes. Voice channels to one or more service nodes can be combined in the same trunk group. The switch and service node must have parallel datafill to ensure that both sides connect to the same voice

circuit. The operating company and service node vendor are responsible for engineering the number of voice links to be used for a given node.

Datafill example for table CLLI

The following example shows sample datafill for table CLLI.

MAP display example for table CLLI

```
CLLI          ADNUM  TRKGRSIZ   ADMININF
-------------------------------------------------------
OSSAINVL1     258    24         OSSAIN_VOICE_LINK_1
OSSAINVL2     259    24         OSSAIN_VOICE_LINK_2
```

Datafilling table TRKGRP

The following table shows the datafill specific to OSSAIN Initial Release for table TRKGRP. Only those fields that apply directly to OSSAIN Initial Release are shown. For a description of the other fields, refer to the data schema section of this document.

For TOPSVL trunk types, field DIR is added.

Datafill dedicated trunk groups for voice channels between the switch and service nodes.

Datafilling table TRKGRP

Field	Subfield or refinement	Entry	Explanation and action
GRPINFO	GRPTYP	TOPSVL	Group type. The dedicated voice trunks for OSSAIN must be trunk group type TOPSVL.
	DIR	OG, 2W, or IC	Direction. This is a new field for TOPSVL trunk group types. In the host, datafill OG. In the remote, datafill IC. This direction must match with the direction in table TRKSGRP.

Datafill example for table TRKGRP

The following example shows sample datafill for table TRKGRP.

OSSAIN Initial Release (continued)

MAP display example for table TRKGRP

```
GRPKEY                                              GRPINFO
-------------------------------------------------------------
OSSAINVL1            TOPSVL  31  NPDGP  NCRT  MIDL  OG
OSSAINVL2            TOPSVL  31  NPDGP  NCRT  MIDL  OG
```

Datafilling table TRKSGRP

The following table shows the datafill specific to OSSAIN Initial Release for table TRKSGRP. Only those fields that apply directly to OSSAIN Initial Release are shown. For a description of the other fields, refer to the data schema section of this document.

This table is not changed. Datafill dedicated trunk groups for voice channels between the switch and service nodes.

Datafilling table TRSGRP

Field	Subfield or refinement	Entry	Explanation and action
SGRPVAR	SIGDATA	STD	Signaling data. Use standard signalling.
	DIR	OG	Direction. Datafill outgoing.
	OPULSTYP	NP	Outgoing type of pulsing. Set to NP (No Pulse), because the DMS switch does not outpulse over trunks of group type TOPSVL.
	OSTARTSG	IM	Outgoing start dial signal. Set to IM (immediate).
	REMBSY	Y	Remote make busy. Set to Y. This field causes the voice trunk to go to the RMB state at the MAP display when the service node goes on hook towards the switch.

Datafill example for table TRKSGRP

The following example shows sample datafill for table TRKSGRP.

MAP display example for table TRKSGRP

```
SGRPKEY        CARDCODE     SGRPVAR
-------------------------------------------------------
OSSAINVL1  0   DS1SIG      STD OG NP IM 0 0 NO NO N N Y 70
OSSAINVL2  0   DS1SIG      STD OG NP IM 0 0 NO NO N N Y 70
```

Datafilling table TRKMEM

Table control for TRKMEM is changed so that deletions are disallowed if table OAVLMAP has a reference to the tuple being deleted.

Datafill dedicated trunk groups for voice channels between the switch and service nodes.

Datafill example for table TRKMEM

The following example shows sample datafill for table TRKMEM.

MAP display example for table TRKMEM

```
CLLI         EXTRKNM   SGRP    MEMVAR
-------------------------------------------------------
OSSAINVL1     2          0      DCM  0  0  21
OSSAINVL2     3          0      DCM  0  0  22
```

Error messages for table TRKMEM

The following error messages apply to table TRKMEM.

Error messages for table TRKMEM

Error message	Explanation and action
DELETE TRUNK MEMBER FROM TABLE OAVLMAP BEFORE DELETING IT FROM TABLE TRKMEM.	Tuples may not be deleted from table TRKMEM until all references to that tuple are removed from table OAVLMAP. This error message is displayed if an attempt is made to delete a tuple from TRKMEM that is referenced in table OAVLMAP.

Datafilling table OAVLMAP

Table OAVLMAP (OSSAIN Voice Link Mapping table) is used in making voice connections between the TOPS switch and service nodes for OSSAIN calls. Voice connections between the switch and a service node are made at the request of the service node by an OAP message. The service node must supply the logical voice channel number for the voice connection in the OAP

OSSAIN Initial Release (continued)

message. This table maps the logical voice channel to an index in table TRKMEM.

Tables TRKMEM and OANODINV must be datafilled before table OAVLMAP.

Following is a description of the table:

Datafilling table OAVLMAP

Field	Subfield or refinement	Entry	Explanation and action
NDANDCH		see subfield NODENAME	Node and voice channel. This is the key to the table and consists of subfields NODENAME and VOICENUM.
	NODENAME	node name from table OANODINV	Node name. Key into table. This is the service node name from table OANODINV (field NODENAME) for this voice channel.
	VOICENUM	0 to 8191	Logical voice channel number. Key into table. This field is the logical voice channel number received from the service node.
CLLI		from table CLLI	Common language location identifier. This field is the first of the two part key into table TRKMEM. It is the trunk name for the voice connection between the switch and service node.
EXTRKNM		0 to 9999	External trunk number. This field is the second of the two part key into table TRKMEM.

Datafill example for table OAVLMAP

The following example shows sample datafill for table OAVLMAP.

MAP display example for table OAVLMAP

```
NDANDCH              CLLI        EXTRKNM
-------------------------------------------------------
NODE_1     10        OSSAINVL1   2
NODE_2     11        OSSAINVL2   3
```

Error messages for table OAVLMAP

The following error messages apply to table OAVLMAP.

Error messages for table OAVLMAP

Error message	Explanation and action
`This CLLI and external trunk name must be datafilled in table TRKMEM before datafilling this table.`	This message is displayed if an attempt is made to datafill a CLLI and EXTRKNM in table OAVLMAP before that voice circuit is defined in table TRKMEM. Table TRKMEM must be datafilled before table OAVLMAP.
`DELETE TRUNK MEMBER FROM TABLE OAVLMAP BEFORE DELETING IT FROM TABLE TRKMEM.`	This message is displayed if an attempt is made to delete a tuple from table TRKMEM that is referenced in table OAVLMAP. Tuples may not be deleted from table TRKMEM until all references to that voice circuit are deleted from table OAVLMAP.
`Trunk group type for CLLI must be TOPSVL.`	This message is displayed if an attempt is made to use a CLLI in table OAVLMAP that is not of trunk group type TOPSVL
`Tuples may not be deleted in table OANODINV until all references to that node name are removed from table OAVLMAP.`	This message is displayed if an attempt is made to datafill a node name in table OAVLMAP before that node name is defined in table OANODINV. Table OANODINV must be datafilled before table OAVLMAP.
`Only service nodes of PM type OSNM may have voice connections with the switch.`	This message is displayed if an attempt is made to datafill a NODENAME that is not of type OSNM. Field NODENAME must be coordinated with the node type in table OANODINV. Only OSNM node types are allowed for voice link connectivity. OSNM nodes are nodes that have a maintenance appearance to the switch.

Datafilling table STDPRTCT.STDPRT

The following table shows the datafill specific to OSSAIN Initial Release for subtable STDPRTCT.STDPRT. Only those fields that apply directly to

OSSAIN Initial Release (continued)

OSSAIN Initial Release are shown. For a description of the other fields, refer to the data schema section of this document.

Datafilling table STDPRTCT.STDPRT

Field	Subfield or refinement	Entry	Explanation and action
			This table is not changed. The following information applies to calls received on TOPS trunks with field SIGTYPE set to either COMFGD or EAOSS.
	PRERTSEL	T	Pretranslator route selector. For proper routing of DD dialed calls, use the T selector.
	POS	TOPS	Position. In order for translations to mark a DD signalled call as OA, field POS must be set to TOPS. This value routes the call to table QMSTOPS for selection of QMS and later selection of OSSAN. Otherwise, the call tandems through the TOPS office.

Datafill example for table STDPRTCT.STDPRT

The following example shows sample datafill for table STDPRTCT.STDPRT.

MAP display example for table STDPRTCT.STDPRT

```
 FROMDIGS        TODIGS
                                                    PRETRTE
-------------------------------------------------------------
2122205555    2122205555
                           T OA 0  TOPS  DD   10 10  TOPS
```

The above example show the required datafill to override a call received with called digits 2122205555 signalled as DD and then marked as OA.

Datafilling table QAPLNDEF

The following table shows the datafill specific to OSSAIN Initial Release for table QAPLNDEF. Only those fields that apply directly to OSSAIN Initial

Release are shown. For a description of the other fields, refer to the data schema section of this document.

Datafilling table QAPLNDEF

Field	Subfield or refinement	Entry	Explanation and action
APLNAME		OSSAIN	QMS Application. Datafill OSSAIN for the new OSSAIN call and agent queues.
NUMAGNTS		0 to 16383	Number of agents. The maximum value is increased from 8191 to 16383 when field APLNAME is set to OSSAIN. This alllows more OSSAIN sessions for subscriber originated calls to be datafilled in table OASESNPL.

Datafill example for table QAPLNDEF

The following example shows sample datafill for table QAPLNDEF.

MAP display example for table QAPLNDEF

```
APLNAME   CALLQS   CQELEMS   AGENTQS   NUMAGNTS   CTSEARCH
------------------------------------------------------------
TOPS      255      3000      127       170         0
OSSAIN    220      5000      100       1500        0
```

Datafilling table QMSCQDEF

The following table shows the datafill specific to OSSAIN Initial Release for table QMSCQDEF. Only those fields that apply directly to OSSAIN Initial Release are shown. For a description of the other fields, refer to the data schema section of this document.

Datafilling table QMSCQDEF

Field	Subfield or refinement	Entry	Explanation and action
APPLNCQ	APLNAM	OSSAIN	Application name. Datafill OSSAIN for the new OSSAIN call and agent queues. Note, OSSAIN call queues are independent of existing operator call queues.

Datafill example for table QMSCQDEF

The following example shows sample datafill for table QMSCQDEF.

OSSAIN Initial Release (continued)

MAP display example for table QMSCQDEF

```
APPLNCQ    CQPRIO  CQAGS  CQMAXSIZ  DEFLAREA     PRAQAREA
-------------------------------------------------------
TOPS 0      20      18     300       Y 600 5      Y 4 100
OSSAIN 0    20      18      0         N            N
OSSAIN 1    20      10      0         N            N
OSSAIN 2    35      18     300        Y 1200 5     N
OSSAIN 3    35      10     240        Y 1500 5     N
```

In the above example, call queues OSSAIN 0 and OSSAIN 1 are set up to disallow queuing of calls by setting CQMAXSIZ=0. On the other hand, OSSAIN 2 and OSSAIN 3 are set up to provide queuing capability for the functions associated with these call queues.

Datafilling table QMSTOPS

The following table shows the datafill specific to OSSAIN Initial Release for table QMSTOPS. Only those fields that apply directly to OSSAIN Initial

Release are shown. For a description of the other fields, refer to the data schema section of this document.

Datafilling table QMSTOPS

Field	Subfield or refinement	Entry	Explanation and action
	CO	UNSPEC, OH, OA, DD, DELAY, 555, TS, TSUB, 211, 311, 411, 511, 611, 711, 811, 911, 999, HOM555, FOR555, SPARE1, SPARE2, SPARE3, SPARE4, SPARE5, INTS	Call origination type. OSSAIN supports a limited number of call origination types. QMS table QMSTOPS assigns an initial call queue according to the call origination type. Therefore, starting with table QMSTOPS, datafill the QMS tables to route only supported call types through QMS to OSSAIN. Otherwise, unsupported call types routed to OSSAIN are sent to treatment. The supported call types are the following: • UNSPEC (unspecified) • OH (operator handled, 0-) • OA (operator assisted) • DD (direct dialed, 0+) • DELAY • 555 • TS (toll station) • TSUB (toll subscriber) • 211, 311, 411, 511, 611, 711, 811, 911, 999 • HOM555 (home 555) • FOR555 (foreign 555) • SPARE1, SPARE2, SPARE3, SPARE4, SPARE5 • INTS (service intercept)

Datafill example for table QMSTOPS

The following example shows sample datafill for table QMSTOPS.

MAP display example for table QMSTOPS

```
CO      CT4Q
------------------------------------------------------------
OH      0_MINUS
```

OSSAIN Initial Release (continued)

Datafilling table CT4QNAMS

In TOPS07, new refinements OAINPRE and OPRSYS are added for functionaltiy OSSAIN 07 Enhancements, OSAN0101. However, these refinements are not supported by this functionaltiy.

In TOPS06, new field SYSAREA is added to indicate the service system: OSSAIN or the existing TOPS operator. Calls marked for OSSAIN are routed through the QMS refinement tables. Therefore, new QMS refinement tables for OSSAIN must be datafilled. The CT4Qs used for OSSAIN must first be defined in table CT4QNAMS. OSSAIN tables OAINCTLA and OAFUNDEF use the CT4Qs assigned in this table.

Existing fields CT4QDISP and AUTOORDB are changed to subfields under new field SYSAREA.

Field SYSAREA indicates the service system: OSSAIN or the existing TOPS operator. Calls marked for OSSAIN are routed through the QMS refinement tables. Therefore, new QMS refinement tables for OSSAIN must be datafilled. The CT4Qs used for OSSAIN must first be defined in table CT4QNAMS. OSSAIN tables OAINCTLA and OAFUNDEF use the CT4Qs assigned in this table.

The following is a description of all the fields.

Datafilling table CT4QNAMS

Field	Subfield or refinement	Entry	Explanation and action
CT4QNUM		0 to 2046	CT4Q number. This is the first and key field of the table. This field is not changed. Enter a value from 0 to 2046 for use as an index associated with the CT4Q.
CT4QNAME		alphanumeric (1 to 32 characters)	CT4Q name. Enter the name used in all the other call queue assignment (CQA) tables. This field is not changed. UNSPEC and CAMA are the default entries. Entries datafilled in field CT4QNAME appear in other CQA tables.
NOAMA		Y or N	No automatic message accounting indicator. Enter Y (yes) to activate the AMA indicator. This field is not changed. Enter N (no) to not activate the AMA indicator.

OSSAIN Initial Release (continued)

Datafilling table CT4QNAMS

Field	Subfield or refinement	Entry	Explanation and action
SYSAREA		see subfield	System area. This field consists of subfield SYSAREA_SEL and its refinements.
	SYSAREA_ SEL	TOPSOPR or OSSAIN	System area select. After a call is routed through QMS to a final call queue, this field directs the call to one of the following: • TOPSOPR - TOPS operator. Datafill subfields CT4QDISP, AUTOORDB, and OAINPRE. • OSSAIN - OSSAIN service node. Datafill table OAINCTLA. No further fields must be datafilled.
	CT4QDISP	see subfield	CT4Q display. CT4QDISP consists of subfields CT4QDISP_SEL.
	CT4QDISP_ SEL	Y or N	CT4Q display selector. Enter Y if a special CT4Q display is required and datafill refinement DISPLAY. Enter N if a special CT4Q display is not required.
	DISPLAY	1 to 8 characters	Display. If the entry in field CT4QDISP_SEL is Y, datafill this refinement. Enter a one- to eight-character vector.
	AUTOORDB	see subfield	Automated operator reference database. Field AUTOORDB consists of subfields AUTOORDB_SEL.
	AUTOORDB_ SEL	Y or N	AUTOORDB Selector. Enter Y if optional auto-ORDB index is required and datafill refinement ORDBVAL. Enter N if optional auto-ORDB index is not required.

OSSAIN Initial Release (continued)

Datafilling table CT4QNAMS

Field	Subfield or refinement	Entry	Explanation and action
	ORDBVAL	0 to 100	Order B value. If the entry in field AUTOORDB_SEL is Y, datafill this refinement. Enter a value from 0 to 100 that represents the index number.
	OAINPRE	Y or N	OSSAIN preprocessing. Datafill this field if SYSAREA_SEL = TOPSOPR. This capability is not supported by this functionality. Therefore, enter N and no further refinements require datafill. This capability is supported in functionality OSSAIN 07 Enhancements, OSAN0101.

Datafill example for table CT4QNAMS

The following example shows sample datafill for table CT4QNAMS.

MAP display example for table CT4QNAMS

```
CT4QNUM  CT4QNAME  NOAMA  SYSAREA
-------------------------------------------------------
0        UNSPEC    N      TOPSOPR  N  N  N
1        DA_411    N      TOPSOPR  Y 411_OPR  N  N
2        0+YELLOW  N      OSSAIN
3        OSS_DA    N      OSSAIN
4        PCS_OPR   N      TOPSOPR  Y PCSOPR  N  N
```

Datafilling QMS tables

Calls marked for OSSAIN are routed through QMS, including optional refinements tables. Therefore, new dedicated queues for OSSAIN must be datafilled. Refer to the Host QMS functionality, ADVQ0003, for further details.

Table CT4QAUTO, a refinement table, must contain datafill (cannot be empty) when using automated services. Otherwise, an automated system may request further assistance and return the call to the incorrect service type. This causes SWERS and TQMS logs. Refer to the “Remote Queue Management System" functionality, table CT4QAUTO in the datafill procedure section for further details.

Tables TQORDERA and TQORDERB must be datafilled after the refinement tables. Otherwise, changing the TQORDER tables before finalizing the CT4Q refinement tables can cause incorrect routing of some calls.

Datafilling table OQCQPROF

OSSAIN QMS Call Queue Profile is a new table in release TOPS06 that associates lists of OSSAIN QMS call queues with a call queue profile number. Session pools in OASESNPL can then be associated with one of those profile numbers in table OQCQPROF.

This table is very similar to its TOPS counterpart, table TQCQPROF (TOPS QMS Call Queue Profiles table). The only difference between the tables is that table TQCQPROF contains field DLAYCT4Q which is not required for OSSAIN.

Call queue profiles are specified in one of two ways:

- Using office-wide priority and office-wide assignable grade of service (AGS) values (see field PRIOTYPE set to OFC).
- Using profile-specific priority and profile-specific assignable grade of service (AGS) values (see field PRIOTYPE set to PROF).

Call queue profiles datafilled using office-wide priorities contain a list of up to 255 call queues (field CQLIST). Each call queue is specified as a value in the range CQ0 to CQ254. The priority and AGS associated with each of the call queues specified are the office-wide values defined for the queue in table QMSCQDEF. Office-wide priority call queue profiles result in consistent office-wide priorities and AGS values being applied to all operators.

If the operating company wishes to override the system priority and AGS associated with each call queue, the particular profile is datafilled using priority and AGS values specific to that profile. For each of up to four priority levels (labeled PRIO3, PRIO2, PRIO1,and PRIO0, with PRIO3 being the highest priority level), a list of up to 32 call queues along with the desired AGS for each is specified.

Table QAPLNDEF must be datafilled before table OQCQPROF. Note that the AGENTQ and CALLQ values in table OQCQPROF are limited by the datafill for the OSSAIN application in table QAPLNDEF.

OSSAIN Initial Release (continued)

The following table is a description of the fields.

Datafilling table OQCQPROF

Field	Subfield or refinement	Entry	Explanation and action
CQPROFNM		0 to 254	Call queue profile number. This number is used in table OASESNPL.
AGENTQ		AQ0 to AQ254 (upper value limited by AGENTQS in QAPLNDEF)	OSSAIN QMS agent queue. Enter the agent queue number for operators that are idle and available to handle calls with this profile number. When an agent is requested from the QMS CAM, the agent queues are searched for an agent that has the requested call queue in its profile. Any number of agent queues can be used, but a good starting point would be to have one agent queue for each call queue profile datafilled in table OQCQPROF. The range of agent queues is limited by the value datafilled in field AGENTQS of table QAPLNDEF. For example, if AGENTQS is set to 10, then in table OQCQPROF only queues AQ0 to AQ9 should be datafilled.
PRIOAREA		see subfield PRIOTYPE	Call queue priority type selector. This field consists of subfield PRIOTYPE.
	PRIOTYPE	OFC or PROF	Call queue priority type. Enter OFC for office-wide call queue and datafill refinement CQLIST. Enter PROF for profile call queue and datafill refinements PRIO3, PRIO2, PRIO1, and PRIO0. Up to four multiples of each specified priority levels PRIO3 (highest priority), PRIO2, PRIO1, and PRIO0 (lowest priority) can be datafilled. If less than four multiples are required, end the list with a $ (dollar sign). If PRIOTYPE = OFC, datafill refinement CQLIST. If PRIOTYPE = PROF, datafill refinements PRIO3, PRIO2, PRIO1, and PRIO0.

Datafilling table OQCQPROF

Field	Subfield or refinement	Entry	Explanation and action
	CQLIST	CQ0 to CQ254 (upper value limited by CALLQS in QAPLNDEF)	Call queue list. If the entry in subfield PRIOTYPE is OFC, datafill this refinement. Enter a value for each call queue to be included in the profile. No further refinements require datafill. The range of call queues is limited by the value datafilled in field CALLQS of table QAPLNDEF. For example, if CALLQS is set to 10, then in table OQCQPROF only queues AQ0 to AQ9 should be datafilled.
	PRIO3	see subfields CALLQ and AGS	Priority level 3. If the entry in subfield PRIOTYPE is PROF, datafill this refinement. This field is the highest priority level and consists of subfields CALLQ and AGS.
	CALLQ	CQ0 to CQ254 (upper value limited by CALLQS in QAPLNDEF)	Call queue. If the entry in subfield PRIOTYPE is PROF, datafill this refinement. Enter up to 32 call queues to be included in the profile. If less than 32 queues are required, end the list with a $ (dollar sign). The range of call queues is limited by the value datafilled in field CALLQS of table QAPLNDEF. For example, if CALLQS is set to 10, then in table OQCQPROF only queues AQ0 to AQ9 should be datafilled.
	AGS	10 to 80	Assignable grade of service. If the entry in subfield PRIOTYPE is PROF, datafill this refinement. Enter the aging factors from 1.0X to 8.0X for the grade of service to be applied to the call queue (refinement CALLQ) for the purposes of this profile. Specify 10 for no aging.
	PRIO2	see subfields CALLQ and AGS	Priority level 2. If the entry in subfield PRIOTYPE is PROF, datafill this refinement. This field is the second highest priority level and consists of subfields CALLQ and AGS.

OSSAIN Initial Release (continued)

Datafilling table OQCQPROF

Field	Subfield or refinement	Entry	Explanation and action
	CALLQ	CQ0 to CQ254 (upper value limited by CALLQS in QAPLNDEF)	Call queue. If the entry in subfield PRIOTYPE is PROF, datafill this refinement. Enter up to 32 call queues to be included in the profile. If less than 32 queues are required, end the list with a $ (dollar sign). The range of call queues is limited by the value datafilled in field CALLQS of table QAPLNDEF. For example, if CALLQS is set to 10, then in table OQCQPROF only queues AQ0 to AQ9 should be datafilled.
	AGS	10 to 80	Assignable grade of service. If the entry in subfield PRIOTYPE is PROF, datafill this refinement. Enter the aging factors from 1.0X to 8.0X for the grade of service to be applied to the call queue (refinement CALLQ) for the purposes of this profile. Specify 10 for no aging.
	PRIO1	see subfields CALLQ and AGS	Priority level 1. If the entry in subfield PRIOTYPE is PROF, datafill this refinement. This field is the third highest priority level and consists of subfields CALLQ and AGS.
	CALLQ	CQ0 to CQ254 (upper value limited by CALLQS in QAPLNDEF)	Call queue. If the entry in subfield PRIOTYPE is PROF, datafill this refinement. Enter up to 32 call queues to be included in the profile. If less than 32 queues are required, end the list with a $ (dollar sign). The range of call queues is limited by the value datafilled in field CALLQS of table QAPLNDEF. For example, if CALLQS is set to 10, then in table OQCQPROF only queues AQ0 to AQ9 should be datafilled.
	AGS	10 to 80	Assignable grade of service. If the entry in subfield PRIOTYPE is PROF, datafill this refinement. Enter the aging factors from 1.0X to 8.0X for the grade of service to be applied to the call queue (refinement CALLQ) for the purposes of this profile. Specify 10 for no aging.

Datafilling table OQCQPROF

Field	Subfield or refinement	Entry	Explanation and action
	PRIO0	see subfields CALLQ and AGS	Priority level 0. If the entry in subfield PRIOTYPE is PROF, datafill this refinement. This field is the lowest priority level and consists of subfields CALLQ and AGS.
	CALLQ	CQ0 to CQ254 (upper value limited by CALLQS in QAPLNDEF)	Call queue. If the entry in subfield PRIOTYPE is PROF, datafill this refinement. Enter up to 32 call queues to be included in the profile. If less than 32 queues are required, end the list with a $ (dollar sign). The range of call queues is limited by the value datafilled in field CALLQS of table QAPLNDEF. For example, if CALLQS is set to 10, then in table OQCQPROF only queues AQ0 to AQ9 should be datafilled.
	AGS	10 to 80	Assignable grade of service. If the entry in subfield PRIOTYPE is PROF, datafill this refinement. Enter the aging factors from 1.0X to 8.0X for the grade of service to be applied to the call queue (refinement CALLQ) for the purposes of this profile. Specify 10 for no aging.

Datafill example for table OQCQPROF

The following example shows sample datafill for table OQCQPROF.

MAP display example for table OQCQPROF

```
CQPROFNM  AGENTQ                                    PRIOAREA
--------------------------------------------------------------
0         AQ0        OFC (CQ0)$
1         AQ1        OFC (CQ1)$
2         AQ3        OFC (CQ0)(CQ1)$
3         AQ4        PROF (CQ0 10)(CQ1 80)$ (CQ2 10)$
```

In the above example, call queue profile number 0 is used for agents that serve CQ0. From table OAFUNDEF sample datafill in this section, the BRANDING function is associated with CQ0. From table OASESNPL, both the BRAND_NODE1 and BRAND_NODE2 session pools are datafilled as using call queue profile number 0 (field OCQPROF). Since the MAXSESN field for

OSSAIN Initial Release (continued)

each of those session pools is set to 100, there are 200 agents placed in agent queue AQ0, waiting to serve calls from CQ0 (the BRANDING function).

Error messages for table OQCQPROF

The following error messages apply to table OQCQPROF.

Error messages for table OQCQPROF

Error message	Explanation and action
`At least one call queue must be specified.`	When adding a tuple to table OQCQPROF, at least one call queue must be provided.
`A call queue may not appear in more than one priority level.`	This message is displayed if an attempt is made to datafill the same call queue in more than one priority level.
`A call queue has been specified in the same priority level with different AGS values.`	This message is displayed if an attempt is made to datafill the same call queue in the same priority level with different AGS values.

`This call queue profile is in use in table OASESNPL.`
 	
`You must remove all references to this profile before you can delete it.`
	Tuples may not be deleted in table OQCQPROF until all references to that call queue profile are removed from table OASESNPL. These error messages are displayed if an attempt is made to delete a call queue profile from table OQCQPROF that is in use in table OASESNPL.

`Unable to change call queue profile. Check QMS logs and SWERRS.`	This error message can occur when changing a tuple in table OQCQPROF and an error occurs when trying to update the profile in the QMS CAM.

Datafilling table OASESNPL

OSSAIN Session Pool was a new table in TOPS06 that defines the attributes of session pools for OSSAIN calls. A session pool is a grouping of sessions on a particular service node that all serve the same function (service) or functions.

In release TOPS07, this table is modified to define host-remote session pools. However, these session pools are not supported by this functionality. These session pools are supported in functionaltiy OSSAIN 07 Enhancements, OSAN0101.

Table OANODINV must be datafilled before table OASESNPL.

Following is a description of the table:

Datafilling table OASESNPL

Field	Subfield or refinement	Entry	Explanation and action
SESNPLID		0 to 4094	Session pool identification. Key to table.
SESNPLNM		1 to 16 characters	Session pool name. Enter a unique name that describes the session pool.
MAXSESN		0 to 1023	Maximum sessions. This number indicates the maximum number of simultaneous calls that can be handled by the node for this session pool.
NODENAME		from table OANODINV	Node name. Service node name defined in table OANODINV.

OSSAIN Initial Release (continued)

Datafilling table OASESNPL

Field	Subfield or refinement	Entry	Explanation and action
ORIGAREA		see subfield ORIGTYPE	Origination type area. This field consists of subfield ORIGTYPE and refinements.
	ORIGTYPE	SUBSCRIBER SN	Origination type. This field identifies how the sessions in the session pool are selected. Following are descriptions of the values: • SUBSCRIBER - This session is selected by the switch for communication with a service node. This value is used for OSSAIN calls originated by a subscriber. Datafill subfield SWTCHTYP_AREA and refinements. The NODENAME must be datafilled in table OANODINV with field ONPMTYPE as OSNM. • SN - This value is used for calls originated by a service node. This is useful for Message Delivery where a service node would spin up a call in the switch in order to deliver a message to the subscriber, much like an operator delay call. Datafill subfields ONHKTMR_SEL, CALLTMR_SEL, and PROTAREA. The NODENAME must be datafilled in table OANODINV with field ONPMTYPE as OSNM. Values OSACORIG and OSACTERM also appear on the MAP display, but are only supported by functionality OSSAIN 07 Enhancements, OSAN0101.

If ORIGTYPE = SUBSCRIBER, datafill subfield SWTCHTYP_AREA and refinements.

Datafilling table OASESNPL (ORIGTYPE = SUBSCRIBER)

Field	Subfield or refinement	Entry	Explanation and action
	SWTCHTYP _AREA	see subfield SWTCHTYP	Switch type area. This field consists of subfield SWTCHTYP.
	SWTCHTYP	S	Switch type. If ORIGTYPE = SUBSCRIBER, datafill this field and refinements. This field is the role of the TOPS switch in routing and queuing for this session pool The only value suppported by this functionality is S, where the switch is acting as a stand-alone for this session pool. Datafill subfields ONHKTMR_SEL, CALLTMR_SEL, TRIGGER_AREA, and PROTAREA. Values SH and R also appear on the MAP display but are only supported by functionality OSSAIN 07 Enhancements, OSAN0101.
	ONHKTMR_ SEL	see subfield ONHKTMR	On-hook sanity timer selector. This field consists of subfield ONHKTMR.
	ONHKTMR	USEDEFLT or OVERRIDE	On-hook sanity timer for this session pool. This sanity timer is initiated when the switch detects that a subscriber has gone on-hook. The values are defined as follows: • USEDEFLT - The on-hook sanity timer value is in table OAINPARM parameter CALL_SANITY_TIMER_DURATION. • OVERRIDE - The on-hook sanity timer value is specified in following field TIMERVAL. Datafill refinement TIMERVAL.
	TIMERVAL	1 to 3600	Timer value. Datafill this field if field ONHKTMR = OVERRIDE. Enter the on-hook sanity timer value.
	CALLTMR_S EL	see subfield CALLTMR	Call sanity timer selector. This field consists of subfield CALLTMR.

OSSAIN Initial Release (continued)

Datafilling table OASESNPL (ORIGTYPE = SUBSCRIBER)

Field	Subfield or refinement	Entry	Explanation and action
	CALLTMR	USEDEFLT or OVERRIDE	Call sanity timer for this session pool. This sanity timer is initiated when no subscribers are connected to the call. The values are defined as follows: • USEDEFLT - The call sanity timer value is from table OAINPARM parameter CALL_SANITY_TIMER_DURATION. • OVERRIDE - The call sanity timer value is specified in following field TIMERVAL. Datafill refinement TIMERVAL.
	TIMERVAL	1 to 3600	Timer value. Datafill this field if field CALLTMR = OVERRIDE. Enter the call sanity timer value.
	TRIGGER_AREA	see subfield	Trigger area. This field consists of subfield TRIGEVNT
	TRIGEVNT	Y or N	Trigger event. The value are defined in the following: • Y - This session pool is only used for one trigger event inform message. No agent data is allocated. Datafill this session pool name in table OAFUNDEF, field TRIGPOOL. • N - This session pool is used for subscriber originations and trigger event information. Datafill refinement OCQPROF.
	OCQPROF	from table OQCQPROF	OSSAIN call queue profile number. Datafill this field if field TRIGEVNT = N. This is an index into table OQCQPROF that must be previously defined in table OQCQPROF.
	PROTAREA	see subfield PROTOCOL	Protocol area. This field consists of subfield PROTOCOL.
	PROTOCOL	UDP	Protocol. This field specifies the transport protocol to communicate between the switch and service node or between OSAC switches using this session pool. The only valid value is UDP. Datafill refinement fields CPPORT and MTCPORT.

Datafilling table OASESNPL (ORIGTYPE = SUBSCRIBER)

Field	Subfield or refinement	Entry	Explanation and action
	CPPORT	1024 to 32767	Call processing port. This is the UDP port number that the service node uses to receive call processing messages for this session pool. Refer to service node documentation or the developer for port number assignment.
	MTCPORT	1024 to 32767	Session pool maintenance port. This field is the UDP port number that the service node uses to receive maintenance messages for this session pool. Refer to service node documentation or the developer for port number assignment.

If ORIGTYPE = SN, datafill subfields ONHKTMR_SEL, CALLTMR_SEL, and PROTAREA.

Datafilling table OASESNPL (ORIGTYPE = SN)

Field	Subfield or refinement	Entry	Explanation and action
	ONHKTMR_SEL	see subfield ONHKTMR	On-hook sanity timer selector. This field consists of subfield ONHKTMR.
	ONHKTMR	USEDEFLT or OVERRIDE	On-hook sanity timer for this session pool. This sanity timer is initiated when the switch detects that a subscriber has gone on-hook. The values are defined as follows: • USEDEFLT - The on-hook sanity timer value is in table OAINPARM parameter CALL_SANITY_TIMER_DURATION. • OVERRIDE - The on-hook sanity timer value is specified in following field TIMERVAL. Datafill refinement TIMERVAL.
	TIMERVAL	1 to 3600	Timer value. Datafill this field if field ONHKTMR = OVERRIDE. Enter the on-hook sanity timer value.
	CALLTMR_SEL	see subfield CALLTMR	Call sanity timer selector. This field consists of subfield CALLTMR.

OSSAIN Initial Release (continued)

Datafilling table OASESNPL (ORIGTYPE = SN)

Field	Subfield or refinement	Entry	Explanation and action
	CALLTMR	USEDEFLT or OVERRIDE	Call sanity timer for this session pool. This sanity timer is initiated when no subscribers are connected to the call. The values are defined as follows: • USEDEFLT - The call sanity timer value is from table OAINPARM parameter CALL_SANITY_TIMER_DURATION. • OVERRIDE - The call sanity timer value is specified in following field TIMERVAL. Datafill refinement TIMERVAL.
	TIMERVAL	1 to 3600	Timer value. Datafill this field if field CALLTMR = OVERRIDE. Enter the call sanity timer value.
	PROTAREA	see subfield PROTOCOL	Protocol area. This field consists of subfield PROTOCOL.
	PROTOCOL	UDP	Protocol. This field specifies the transport protocol to communicate between the switch and service node or between OSAC switches using this session pool. The only valid value is UDP. Datafill refinement fields CPPORT and MTCPORT.
	CPPORT	1024 to 32767	Call processing port. This is the UDP port number that the service node uses to receive call processing messages for this session pool. Refer to service node documentation or the developer for port number assignment.
	MTCPORT	1024 to 32767	Session pool maintenance port. This field is the UDP port number that the service node uses to receive maintenance messages for this session pool. Refer to service node documentation or the developer for port number assignment.

Datafill example for table OASESNPL

The following example shows sample datafill for table OASESNPL.

MAP display example for table OASESNPL

```
SESNPLID SESNPLNM       MAXSESN  NODENAME
                                                                ORIGAREA
-------------------------------------------------------------------------
0        BRAND_NODE1    100      NODE_1
                SUBSCRIBER  S  USEDEFLT  USEDEFLT  N 9 UDP 7001 7002
3       3WCLG_01  10     NODE3
                SN USEDEFLT USEDEFLT UDP 9001 9002
```

The above tuples are described as follows:

- Tuple 1 - This is a service node session that the host uses in a standalone configuration (S). The host is the direct user of this service node.
- Tuple 2 - This is a service node session that the service node initiates to spin up a call in the host.

Error messages for table OASESNPL

The following error messages apply to table OASESNPL.

Error messages for table OASESNPL

Error message	Explanation and action
`OSSAIN session pool names must be unique.`	This message is displayed if an attempt is made to datafill field SESNPLNM with the same session pool name of another tuple.
`OSAC is not currently supported for OSSAIN.`	This message is displayed if an attempt is made to set field ORIGTYPE = OSAC. This value is supported by functionality OSSAIN 07 Enhancements, OSAN0101.
`OSAC is not currently supported for OSSAIN.` `Only a SWTCHTYP of S (stand-alone) is supported.`	This message is displayed if an attempt is made to datafill field SWTCHTYP with value H, SH, or R. These values are supported by functionality OSSAIN 07 Enhancements, OSAN0101.
`Field SWTCHTYP cannot be datafilled as R for OSNM nodes.`	This message is displayed if an attempt is made to set SWTCHTYP = R for a node type of OSNM in table OANODINV. Then, SWTCHTYP must be S, SH, or H. Field SWTCHTYP must coordinate with the node type in table OANODINV.

OSSAIN Initial Release (continued)

Error messages for table OASESNPL

Error message	Explanation and action
The session pool associated with this tuple must first be OFFLINE before this tuple can be changed.	This message is displayed if an attempt is made to change a tuple while the session pool associated with that tuple is not OFFLINE
The session pool associated with this tuple must first be OFFLINE before this tuple can be deleted.	This message is displayed if an attempt is made to delete a tuple while the session pool associated with that tuple is not OFFLINE
Field ORIGTYPE cannot be changed. You must delete this tuple first and then re-add with the new value.	This message is displayed if an attempt is made to change field ORIGTYPE.
Field SWTCHTYP cannot be changed. You must delete this tuple first and then re-add with the new value.	This message is displayed if an attempt is made to change field SWTCHTYP.
Field NODENAME cannot be changed. You must delete this tuple first and then re-add with the new value.	This message is displayed if an attempt is made to change field NODENAME.
You must datafill the call queue profile in table OQCQPROF before the index can be datafilled in this table.	This message is displayed if an attempt is made to datafill field OCQPROF with a call queue profile not been defined in table OQCQPROF.
This session pool name is in use in Table OAFUNDEF. You must remove all references to this session pool before you can delete it.	Tuples may not be deleted from table OASESNPL until all references to that session pool name are removed from table OAFUNDEF. This error message is displayed if an attempt is made to delete a session pool from OASESNPL that is in use by table OAFUNDEF.
Field TRIGEVNT cannot be changed. Delete this tuple first and re-add with the new value.	The TRIGEVNT field cannot be changed without first deleting the tuple and re-adding it with the correct TRIGEVNT value. This error message is displayed if an attempt is made to change the TRIGEVNT field.

Datafilling table OAFUNDEF

OSSAIN Function Definition was a new table in TOPS06 that defines the functions used in processing OSSAIN calls. A function is a service or portion of a service provided by a service node, live operator, or an existing TOPS automated system.

In TOPS07, field TRIGGER_AREA was added.

Tables OANODINV and CT4QNAMS must be datafilled before table OAFUNDEF.

Table OAFUNDEF must be datafilled before tables OAFNDISP, OAFUNBLK, OACNNPRF, OATLKPRF, OADTFPRF, OACAUPRF, OADSCPRF, and OACTLDEF.

Following is a description of the table:

Datafilling table OAFUNDEF

Field	Subfield or refinement	Entry	Explanation and action
FUNCID		0 to 1022	Function identification. Key into table.
FUNCNAME		1 to 16 characters	Function name. This value is used by other OSSAIN tables.
FUNCAREA		see subfield FUNCTYPE	Function area. This field consists of subfield FUNCTYPE and refinements.
	FUNCTYPE	SN, TOPSOPER, TOPSAUTO	Function type. The function provider. Following are the values: • SN - service node (Datafill refinements ORIGSERV and CAMHERE.) • TOPSOPER - a live operator (Datafill refinement OPRCT4Q.) • TOPSAUTO - existing TOPS automated system (Datafill refinements AUTOSYS and OPRONFL.)

OSSAIN Initial Release (continued)

Datafilling table OAFUNDEF

Field	Subfield or refinement	Entry	Explanation and action
	ORIGSERV	TASERV, DASERV, INTCSERV	Originating service. If FUNCTYPE = SN, datafill this refinement. This field is used to apply a base service to an OSSAIN call originating on the DMS switch and routed to an OSSAIN service node. Calls receiving DA or Intercept service are in a restricted mode while at the service node. DA and Intercept calls should only be routed to a service node to determine billing for the call prior to transferring the call to an operator. The service from the ORIGSERV field is not applied to calls originated by the service node and the service not applied to calls transferred by the service node or operator. Enter TASERV (for toll and assistance), DASERV (for directory assistance), or INTCSERV (for intercept).
	TRIGGER_AREA	see subfield	Trigger area. This field consists of refinement TRIGEVNT.
	TRIGEVNT	N or Y	Trigger event. Enter Y if this function is used in an OSAC remote for a remote/service node session pool to immediately receive trigger event information. The remote does not have call control. Datafill refinement TRIGPOOL. Otherwise, enter N.
	TRIGPOOL	name from table OASESNPL	Trigger event session pool name. Datafill this field if field TRIGEVNT = Y. Enter a session pool name defined in table OASESNPL.
	CAMHERE	Y	QMS CAM here. If FUNCTYPE = SN, datafill this refinement. This field indicates the location of the QMS CAM. The values are: • Y (yes) - QMS CAM is located in this switch. Datafill refinements CALLQ and ORIGSERV. This is the only supported value. • N (no) - QMS CAM is centralized at an OSAC host switch. This value is only supported in functionality OSSAIN 07 Enhancements, OSAN0101. Only value Y is supported.

Datafilling table OAFUNDEF

Field	Subfield or refinement	Entry	Explanation and action
	CALLQ	call queue from table QMSCQDEF}	Call queue. If CAMHERE=Y, datafill this field with a call queue defined in table QMSCQDEF.
	AUTOSYS	AABS	TOPS automated system. If FUNCTYPE = TOPSAUTO, datafill this refinement. This field indicates the existing TOPS automated system providing this function. The MAP display also shows values MCCS, ACTS, and BRANDING; however, only AABS is currently supported.
	OPRONFL	from field CT4QNAME in table CT4QNAMS	Operator on failure. If FUNCTYPE = TOPSAUTO, datafill this refinement. This field indicates the CT4Q for QMS POSTAUTO refinement ordering if live operator backup is required for the existing TOPS automated system specified in field AUTOSYS. This value is defined in field CT4QNAME of table CT4QNAMS.
	OPRCT4Q	from field CT4QNAME in table CT4QNAMS	Operator call type for queue. If FUNCTYPE = TOPSOPER, datafill this refinement. This field indicates the CT4Q for the final call queue assignment when obtaining a live operator for this function. This value is defined in field CT4QNAME of table CT4QNAMS.

Datafill example for table OAFUNDEF

The following example shows sample datafill for table OAFUNDEF.

MAP display example for table OAFUNDEF

```
FUNCNUM  FUNCNAME        FUNCAREA
---------------------------------------------------------
0        BRANDING        SN  N Y CQ0
1        YELLOW_PAGES    SN   Y TRIG_3_PL  Y CQ1
3        0_MINUS_OPER    TOPSOPER  0_MINUS
4        TOPS_AABS       TOPSAUTO  AABS  0_PLUS
```

OSSAIN Initial Release (continued)

Error messages for table OAFUNDEF

The following error messages apply to table OAFUNDEF.

Error messages for table OAFUNDEF

Error message	Explanation and action
`OSSAIN function names must be unique.`	This message is displayed if an attempt is made to add two tuples with the same function name.
`OSAC is not currently supported for OSSAIN. Field CAMHERE must be datafilled as Y.`	This message is displayed if an attempt is made to set CAMHERE to N. Value N is only supported by functionality OSSAIN 07 Enhancements, OSAN0101.
`AABS is the only TOPS automated system that is currently supported for OSSAIN.`	This message is displayed if an attempt is made to datafill field AUTOSYS with a TOPS automated system other than AABS. AABS is the only TOPS automated system supported in the initial release (TOPS06) of OSSAIN.
`Only nodes of PM type OSAC may be datafilled in field NODENAME.`	This message is displayed if an attempt is made to datafill a node name in table OAFUNDEF that is not of type OSAC. Table OANODINV allows nodes to be one of three types: OSN, OSNM, and OSAC. Only OSAC type nodes can be datafilled in table OAFUNDEF when CAMHERE = N.
`This CT4Q is in use in table OAFUNDEF.` `You must remove all references to this CT4Q before you can delete it.`	This message is displayed if an attempt is made to delete a CT4Q from table CT4QNAMS that is in use in table OAFUNDEF. Tuples may not be deleted from table CT4QNAMS until all references to that CT4Q are removed from table OAFUNDEF.
`Field <field name> must be datafilled with a CT4Q from table CT4QNAMS that has a SYSTEM value of TOPSOPR.`	This message is displayed if an attempt is made to datafill field OPRCT4Q or OPRONFL with a CT4Q that is not defined in table CT4QNAMS with field SYSTEM , MCCS, ACTS, BRANDING = TOPSOPR.
`This function is datafilled in table XXXXXXXX.` `Since field FUNCTYPE is being changed from SN, you must remove any references to this function from the OSSAIN trigger tables.`	This message is displayed if an attempt is made to change the FUNCTYPE field from SN to TOPSOPER or TOPSAUTO and the function is referenced in any OSSAIN trigger table. The trigger tables may only redirect to a node.

Error messages for table OAFUNDEF

Error message	Explanation and action
`This function name is in use in table XXXXXXXX.` `You must remove all references to this function name before you can delete it.`	This message is displayed if an attempt is made to delete a tuple from table OAFUNDEF that has a function name used in one of the following tables: OAFNDISP, OAFUNBLK, OACNNPRF, OATLKPRF, OADTFPRF, OACAUPRF, OADSCPRF, or OACTLDEF. Tuples may not be deleted from table OAFUNDEF until all datafill references to that function name are deleted from all of the above tables. Table OAFUNDEF must be datafilled before the above tables. Standard table control error messages are displayed if an attempt is made to datafill those tables with a function name that has not been defined in table OAFUNDEF.
`Only session pools with TRIGEVNT=Y may be datafilled in field TRIGPOOL.`	If the trigger event inform pool is not datafilled as a trigger event session pool, this error message is displayed.

Datafilling table OAFUNBLK

OSSAIN Function Blocking was a new table in TOPS06 that defines the available set of functions for an originating directory number (DN). The DN is mapped in table TOPSDB to an index into table OAFUNBLK. Each entry in table OAFUNBLK specifies a list of functions to be included in the available set or excluded from the available set.

Tuple 0 is the default tuple that indicates there are no functions excluded for the current DN (that is, every function is allowed).

Table OAFUNDEF must be datafilled before table OAFUNBLK. Table OAFUNBLK must be datafilled before table TOPSDB.

OSSAIN Initial Release (continued)

Following is a description of the table:

Datafilling table OAFUNBLK

Field	Subfield or refinement	Entry	Explanation and action
IDX		0 to 1022	Index. An index from table TOPSDB.
FNBLKSEL		INCLUDE or EXCLUDE	Function block select. This field determines which functions are included or excluded. Excluded means that all functions in table OAFUNDEF are allowed for this index (associated DN) except for the ones datafilled in this list. Included means that only the functions in this list are allowed for this index (associated DN).
OAFUNCTS		A list of 0 to 5 functions from table OAFUNDEF.	OSSAIN functions. A list of sequentially performed functions. The function names are defined in field FUNCNAME of table OAFUNDEF.

Datafill example for table OAFUNBLK

The following example shows sample datafill for table OAFUNBLK.

MAP display example for table OAFUNBLK

```
IDX   FNBLKSEL   OAFUNCTS
------------------------------------------------------
0     EXCLUDE     $
1     INCLUDE    BRANDING  NODE_AABS  YELLOW_PAGES$
2     INCLUDE    TOPS_BRANDING  TOPS_AABS$
3     EXCLUDE    YELLOW_PAGES$
```

In the above example, tuple 0 is the default tuple that indicates there are no functions excluded for the current DN (that is, every function is allowed).

Error messages for table OAFUNBLK

The following error messages apply to table OAFUNBLK.

Error messages for table OAFUNBLK

Error message	Explanation and action
TUPLE REFERRED TO BY ANOTHER TABLE - USE TABREF TO GET POTENTIAL TABLE LIST.	This message is displayed if an attempt is made to delete a tuple from table OAFUNBLK that has an index in table TOPSDB. Tuples may not be deleted from table OAFUNBLK if the index value is defined in table TOPSDB. Table OAFUNBLK must be datafilled before table TOPSDB.

Datafilling table TOPSDB

New field OAFUNBLK is added at the end of the tuple to index into table OAFUNBLK for blocking functions by directory number.

Table TOPSDB provides the indices into tables TDBCLASS, TDBDAOPT, TDBNORM, TDBSERV, and new table OAFUNBLK.

Table OAFUNBLK must be datafilled before table TOPSDB.

The following table shows the datafill specific to OSSAIN Initial Release for table TOPDB. Only those fields that apply directly to OSSAIN Initial Release are shown. For a description of the other fields, refer to the data schema section of this document.

Datafilling table TOPSDB

Field	Subfield or refinement	Entry	Explanation and action
TDBKEY		from table DNSCRN	TOPS data base key. This is an existing field that is an index into this table from table DNSCRN.
OAFUNBLK		0 to 1022	OSSAIN function block. This was a new field in TOPS06 that is an index into table OAFUNBLK. This field is used to block functions per DN.

Datafill example for table TOPSDB

The following example shows sample datafill for table TOPSDB.

OSSAIN Initial Release (continued)

MAP display example for table TOPSDB

```
TDBKEY  TDBCLIDX  TDBDAOPT  TDBNORM  TDBSERV  OAFUNBLK
-------------------------------------------------------
0       0         0         0        0        0
1       1         0         0        0        0
2       2         0         0        0        2
3       4         0         0        0        1
```

In the above datafill example, tuple 0 is a default and cannot be changed or deleted.

Error messages for table TOPSDB

The following error messages apply to table TOPSDB.

Error messages for table TOPSDB

Error message	Explanation and action
`Tuple <idx> is not datafilled in table OAFUNBLK.`	This message is displayed if an attempt is made to datafill table TOPSDB with an index (field OAFUNBLK) that has not been defined in table OAFUNBLK (field IDX). Table OAFUNBLK must be datafilled before table TOPSDB.

Datafilling table DNSCRN

This table is not changed. Datafill directory numbers that require function blocking in table OAFUNBLK.

Datafill example for table DNSCRN

The following example shows sample datafill for table DNSCRN.

MAP display example for table DNSCRN

```
DN                ATTROPTS
-------------------------------------------------------
6193229801        (TOPSDB 1)
6193229900        (TOPSDB 2)
```

Datafilling table OACTLDEF

OSSAIN Control List Definition was a new table in TOPS06 that defines control lists for processing OSSAIN calls. A control list is a list of OSSAIN

functions (services) provided by service nodes, existing TOPS operators, and existing TOPS automated services.

Table OAFUNDEF must be datafilled before table OACTLDEF. Table OACTLDEF must be datafilled before tables OACNNPRF, OATLKPRF, OADSCPRF, OACAUPRF, OADTFPRF, OAFNDISP, and OAINCTLA.

Following is a description of the table:

Datafilling table OACTLDEF

Field	Subfield or refinement	Entry	Explanation and action
OACTLNUM		0 to 4094	OSSAIN control number. Index into table from tables OACNNPRF, OATLKPRF, OADSCPRF, OACAUPRF, OADTFPRF, OAFNDISP, and OAINCTLA.
OACTLNAM		1 to 16 characters	OSSAIN control list name. This name is used by tables OACNNPRF, OACAUPRF, OADTFPRF, OADSCPRF, OATLKPRF, OAFNDISP, and OAINCTLA.
NETWRKID		0 to 32767	Network service ID. A unique identifier for a service throughout the network for billing purposes.
OAFUNCTS		from table OAFUNDEF	OSSAIN functions. A list of function names from table OAFUNDEF. These functions (services) are performed sequentially. For the TOPS06 initial release, only 1 function is allowed.

Datafill example for table OACTLDEF

The following example shows sample datafill for table OACTLDEF.

MAP display example for table OACTLDEF

```
OACTLNUM  OACTLNAM     NETWRKID  OAFUNCTS
---------------------------------------------------------
0         0+AABS       3         NEW_AABS$
1         0+DA_SERV    7         OSSAIN_DA$
2         ROUTER       2         ROUTE_NODE$
```

OSSAIN Initial Release (continued)

Error messages for table OACTLDEF

The following error messages apply to table OACTLDEF.

Error messages for table OACTLDEF

Error message	Explanation and action
`This control list name is in use in table XXXXXXXX.` `You must remove all references to this control list name before you can delete it.`	This message is displayed if an attempt is made to delete a tuple from table OACTLDEF that has a control list name used in one of the tables: OACNNPRF, OATLKPRF, OADSCPRF, OACAUPRF, OADTFPRF, OAFNDISP, and OAINCTLA. Tuples may not be deleted from table OACTLDEF until all datafill references to that control list name are deleted from tables OACNNPRF, OATLKPRF, OADSCPRF, OACAUPRF, OADTFPRF, OAFNDISP, and OAINCTLA.
`A control list must have at least 1 function datafilled.`	One function must be datafilled. This message is displayed if an attempt is made to datafill field OAFUNCTS with zero or more than one function.

Datafilling table OAFNDISP

OSSAIN Function Disposition is a new table that defines the actions when an OSSAIN call is deflected or overflowed by the queue management system (QMS) call and agent manager (CAM), a function is blocked, or a failure is encountered when attempting to send an OAP Session Begin message to a service node once an agent has been selected for the call. The OSSAIN call can be routed to treatment, transferred to another function, or transferred to a control list when a disposition is required.

Tables OAFUNDEF and OACTLDEF must be datafilled before table OAFNDISP.

Following is a description of the table:

Datafilling table OAFNDISP

Field	Subfield or refinement	Entry	Explanation and action
FUNCNAME		name from table OAFUNDEF	Function name. Enter a function name defined in table OAFUNDEF.
DEFLACTN		see subfield DEFLDISP	Call deflection action. This field consists of subfield DEFLDISP. Note, this field does not apply to functions with field FUNCTYPE = TOPSOPR or TOPSAUTO in table OAFUNDEF.
	DEFLDISP	TREAT, GOTOFN, or GOTOCTL	Call deflection disposition. This is the action taken if an OSSAIN call is deflected from the QMS CAM when requesting an agent for this function. Following are the actions: • TREAT - Route to treatment. Datafill refinement TREATMENT. • GOTOCTL - Route to another control list. Datafill refinement CTLLIST. • GOTOFN - Route to another function. Datafill refinement FUNCTION. Deflection occurs if deflection is enabled for the queue and the predicted wait time before the call is connected to an agent exceeds the limit set in table QMSCQDEF for that call queue.
	TREATMENT	name from table TMTCNTL	Treatment. If field DEFLDISP=TREAT, datafill this refinement with a name defined in table TMTCNTL.
	CTLLIST	name from table OACTLDEF	Control list. If field DEFLDISP = CTLLIST, datafill this refinement with a control list name defined in table OACTLDEF.
	FUNCTION	name from table OAFUNDEF	Function. If field DEFLDISP = FUNCTION, datafill this refinement with a function name defined in table OAFUNDEF.
OVRFACTN		see subfield OVFLDISP	Call overflow action. This field consists of subfield OVFLDISP. Note, this field does not apply to functions with FUNCTYPE = TOPSOPR or TOPSAUTO in table OAFUNDEF.

OSSAIN Initial Release (continued)

Datafilling table OAFNDISP

Field	Subfield or refinement	Entry	Explanation and action
	OVFLDISP	TREAT, GOTOFN, or GOTOCTL	Call overflow disposition. This action is taken if the QMS CAM indicates the call queue for this call is in an overflow state. Overflow occurs when no agents are available for a call queue and the call queue would exceed its maximum size in table QMSCQDEF if this call were queued.
	TREATMENT	name from table TMTCNTL.	Treatment. If field DEFLDISP = TREAT, datafill this refinement with a name defined in table TMTCNTL.
	CTLLIST	name from table OACTLDEF	Control list. If field OVFLDISP = CTLLIST, datafill this refinement with a control list name defined in table OACTLDEF.
	FUNCTION	name from table OAFUNDEF	Function. If field OVFLDISP = FUNCTION, datafill this refinement with a function name defined in table OAFUNDEF.
BLCKACTN		see subfield BLCKDISP	Blocked function action. This field consists of subfield BLCKDISP.
	BLCKDISP	TREAT, GOTOFN, or GOTOCTL	Blocked function disposition. This action is taken if an OSSAIN call is blocked from the requested function.
	TREATMENT	name from table TMTCNTL.	Treatment. If field BLCKDISP = TREAT, datafill this refinement with a name defined in table TMTCNTL.
	CTLLIST	name from table OACTLDEF	Control list. If field BLCKDISP = CTLLIST, datafill this refinement with a control list name defined in table OACTLDEF.
	FUNCTION	name from table OAFUNDEF	Function. If field BLCKDISP = FUNCTION, datafill this refinement with a function name defined in table OAFUNDEF.
ORFLACTN		see subfield ORFLDISP	Origination failure action. This field consists of subfield ORFLDISP. Note, this field does not apply to functions with FUNCTYPE = TOPSOPR or TOPSAUTO in table OAFUNDEF.

OSSAIN Initial Release (continued)

Datafilling table OAFNDISP

Field	Subfield or refinement	Entry	Explanation and action
	ORFLDISP	TREAT, GOTOFN, or GOTOCTL	OAP routing failure disposition. This is the action taken for a failure when sending the OAP Session Begin message to the service node after the session for the call has already been selected.
	TREATMENT	name from table TMTCNTL	Treatment. If field ORFLDISP = TREAT, datafill this refinement with a name defined in table TMTCNTL.
	CTLLIST	name from table OACTLDEF	Control list. If field ORFLDISP = CTLLIST, datafill this refinement with a control list name defined in table OACTLDEF.
	FUNCTION	name from table OAFUNDEF	Function. If field ORFLDISP = FUNCTION, datafill this refinement with a function name defined in table OAFUNDEF.

Datafill example for table OAFNDISP

The following example shows sample datafill for table OAFNDISP.

MAP display example for table OAFNDISP

```
FUNCNAME   DEFLACTN             OVRFACTN
               BLCKACTN             ORFLACTN
-------------------------------------------------------
BRANDING   GOTOCTL CTLLIST2     GOTOFN LIVE_OPER
              GOTOFN OLDBRANDING    GOTOFN OLDBRANDING
YELPAGES   TREAT VACT           GOTOFN YELPGS_OPER
               GOTOCTL CTLLIST3     TREAT VACT
```

Datafilling table OADTFPRF

OSSAIN DTMF Profile was a new table in TOPS06 that selects services according to DTMF digits while a call is being connected or disconnected. These periods only occur during call float. Only services provided by an OSSAIN node can be selected; that is, a TOPS operator or TOPS automated system cannot be selected.

Tables OAFUNDEF and OACTLDEF must be datafilled prior to datafilling this table.

OSSAIN Initial Release (continued)

This table must be datafilled prior to datafilling a dtmf index into tables OACNNPRF and OADSCPRF.

Following is a description of the table:

Datafilling table OADTFPRF

Field	Subfield or refinement	Entry	Explanation and action
DTMFIDX		0 to 99	DTMF index. Index into table from either table OADSCPRF or OACNNPRF.
PROFILE		see subfields	Profile. This field consists of subfields DIGIT, GENAMA, RLSFWD, and ACTSEL.
	DIGIT	a numeric DTMF digit (0 to 9), STAR, OCTO	DTMF digit. If this event occurs and is selected, the call is routed to an OSSAIN node based on the received DTMF digit. Otherwise, if this event occurs but is not selected, the DTMF input is ignored. Calls floated by AABS or MCCS use DTMF digit # to initiate a sequence call. Value OCTO in this field overrides this processing and routes the call to an OSSAIN node. Calls floated by AABS or MCCS use DTMF digit * to initiate pre-OSSAIN message delivery service (MDS). Value STAR in this field overrides this processing and routes the call to an OSSAIN node.
	GENAMA	Y or N	Generate AMA record. Enter Y to generate an AMA record when processing a DTMF digit event. Otherwise, enter N.
	RLSFWD	Y or N	Release forward party. Enter Y to release the forward party when processing a DTMF digit event. Otherwise, enter N.
	ACTSEL	see subfield ACCTYPE	Action select. This field consists of subfield ACTTYPE.
	ACTTYPE	CTRLLIST or FUNCTION	Action type. Select either a list of services (CTRLLIST) or a single service (FUNCTION) to be performed if the selected trigger occurs. If ACTTYPE = CTRLLIST, datafill subfield CTRLLIST. If ACTTYPE = FUNCTION, datafill subfield FUNCTION.

Datafilling table OADTFPRF

Field	Subfield or refinement	Entry	Explanation and action
	CTRLLIST	name from table OACTLDEF	Control list. If ACTTYPE = CTRLLIST, datafill this refinement. Enter a control list name from table OACTLDEF. A control list is a list of services (defined in table OAFUNDEF) that are applied sequentially. The service provider must be a service node (field FUNCTYPE = SN in table OAFUNDEF). That is, at call float, a trigger event can only redirect a call to a service node.
	FUNCTION	name from table OAFUNDEF	Function. If ACTTYPE = FUNCTION, datafill this refinement. Enter a function name from table OAFUNDEF. A function is a service. The service provider must be a service node (field FUNCTYPE = SN in table OAFUNDEF). That is, at call float, a trigger event can only redirect a call to a service node.
HOLDRCVR		Y or N	Hold receiver. Enter Y to retain the DTMF receiver when transitioning to a service node. Otherwise, enter N.

Datafill example for table OADTFPRF

The following example shows sample datafill for table OADTFPRF.

MAP display example for table OADTFPRF

```
DTMFIDX  PROFILE
                                                    HOLDRCVR
---------------------------------------------------------------
0       (0 N N FUNCTION TOLL_OPR)
        (STAR N N FUNCTION MDS_NODE)$
                                                    N
```

OSSAIN Initial Release (continued)

Error messages for table OADTFPRF

The following error messages apply to table OADTFPRF.

Error messages for table OADTFPRF

Error message	Explanation and action
`RLSFWD MUST BE SET TO Y WHEN GENAMA IS SET TO Y.`	When setting the GENAMA field to Y, the RLSFWD field must also be set to Y. If an attempt is made to set GENAMA to Y while setting RLSFWD to N, this error message is displayed.

Datafilling table OACAUPRF

OSSAIN Cause Profile was a new table in TOPS06 that selects services according to ISUP cause codes while a call is being connected. This period only occurs during call float. Only services provided by an OSSAIN node can be selected; that is, a TOPS operator or TOPS automated system cannot be selected.

Tables OAFUNDEF and OACTLDEF must be datafilled prior to datafilling this table.

This table must be datafilled prior to datafilling a cause index into table OACNNPRF.

Following is a description of the table:

Datafilling table OACAUPRF

Field	Subfield or refinement	Entry	Explanation and action
IDX		0 to 2046	Index. Index into table from table OACNNPRF.
PROFILE		see subfield RELCLASS	Profile. This field consists of subfield RELCLASS.

OSSAIN Initial Release (continued)

Datafilling table OACAUPRF

Field	Subfield or refinement	Entry	Explanation and action
	RELCLASS	NORM, CL2, CL3, CL4, CL5, CL6, CL7	ISUP release class. • NORM - Normal Event Class - Cause codes 1-31 • CL2 - Resource Unavailable Class - Cause codes 34-47 • CL3 - Service Option Not Available Class - Cause codes 52-63 • CL4 - Service Option Not Implemented Class - Cause codes 65-79 • CL5 - Invalid Message Class - Cause codes 81-95 • CL6 - Protocol Error Class - Cause codes 97-111 • CL7 - Interworking Class - Cause code 127 If RELCLASS = NORM, datafill refinements RELCAUSE and ACTSEL. If RELCLASS = CL2 through CL7, datafill refinement ACTSEL.

OSSAIN Initial Release (continued)

Datafilling table OACAUPRF

Field	Subfield or refinement	Entry	Explanation and action
	RELCAUSE	1 to 31	ISUP release cause code. If RELCLASS = NORM, datafill this refinement. For calls not terminating to ISUP trunks, the cause code is not applicable. If a cause code occurs but is not selected for triggering, the call is routed to an appropriate treatment for that cause code. Or, if the cause code occurs and is selected for triggering, the call is instead routed to an OSSAIN node. Following are the codes: • 1 - Unallocated Number • 2 - No Route to Transit Network • 3 - No Route to Destination • 4 - Send Special Info Tone • 5 - Misdialled Trunk Prefix • 16 - Normal Clearing • 17 - User Busy • 18 - No User Responding • 19 - No Answer From User • 21 - Call Rejected • 22 - Number Changed • 25 - Translations Fail • 26 - Call Returns • 27 - Destination out of Service • 28 - Address Incomplete • 29 - Facility Rejected • 30 - Apply Locally • 31 - Normal Unspecified ***Note:*** This list contains the current known ISUP release cause codes. However, any release cause in the range 1-31 can be datafilled.
	ACTSEL	see subfield ACCTYPE	Action select. This refinement is datafilled for all values of field RELCLASS. This field consists of subfield ACTTYPE.

Datafilling table OACAUPRF

Field	Subfield or refinement	Entry	Explanation and action
	ACTTYPE	CTRLLIST or FUNCTION	Action type. Select either a list of services (CTRLLIST) or a single service (FUNCTION) to be performed if the the selected trigger occurs. If ACTTYPE = CTRLLIST, datafill subfield CTRLLIST. If ACTTYPE = FUNCTION, datafill subfield FUNCTION.
	CTRLLIST	name from table OACTLDEF	Control list. If ACTTYPE = CTRLLIST, datafill this refinement. Enter a control list name from table OACTLDEF. A control list is a list of services (defined in table OAFUNDEF) that are applied sequentially. The service provider must be a service node (field FUNCTYPE = SN in table OAFUNDEF). That is, at call float, a trigger event can only redirect a call to a service node.
	FUNCTION	name from table OAFUNDEF	Function. If ACTTYPE = FUNCTION, datafill this refinement. Enter a function name from table OAFUNDEF. A function is a service. The service provider must be a service node (field FUNCTYPE = SN in table OAFUNDEF). That is, at call float, a trigger event can only redirect a call to a service node

Datafill example for table OACAUPRF

The following example shows sample datafill for table OACAUPRF.

MAP display example for table OACAUPRF

```
IDX   PROFILE
-----------------------------------------------------------
0     (NORM 17 FUNCTION MDS_NODE)
      (NORM 18 FUNCTION MDS_NODE)
      (NORM 19 FUNCTION MDS_NODE)
      (CL2 FUNCTION MDS_NODE) $
```

Datafilling table OADSCPRF

OSSAIN Post Disconnect Profile was a new table in TOPS06 that selects services according to types of events during post call disconnect. Trigger events only occur during call float. Only services provided by an OSSAIN

OSSAIN Initial Release (continued)

node can be selected; that is, a TOPS operator or TOPS automated system cannot be selected.

Tables OAFUNDEF, OACTLDEF, and OADTFPRF must be datafilled before this table.

Following is a description of the table:

Datafilling table OADSCPRF

Field	Subfield or refinement	Entry	Explanation and action
DISCIDX		0 to 2046	Post disconnect index. Index into table from table OATPRFIX
PROFILE		see subfields	Profile. This field consists of subfields TRIGGER, SNCONTROL and ACTSEL.
	TRIGGER	FLASH, CLGD	Trigger. A list of trigger events during post call disconnect (end with `$'). If no events are entered, no further refinements of PROFILE must be datafilled. Note, the MAP display also shows values RING, NTFY, TRMT, OPLSF, NOANS, ANS, and PTYD; however, these are not valid trigger events. Following are the valid events: FLASH - The calling party hook flashes. If this event occurs and is selected, the call is routed to an OSSAIN node. Otherwise, if this event occurs but is not selected, this event is ignored. Note, OSSAIN trigger processing is not supported for ACTS floated calls. Calls floated by ACTS are routed to an operator. CLGD - Calling disconnect. The calling party goes on-hook. If this event occurs and is selected, the call is routed to an OSSAIN node. Otherwise, if this event occurs but is not selected, the call is taken down. Note, OSSAIN trigger processing is not supported for calls requiring Time and Charges. These calls are routed to ACTS or an operator.

Datafilling table OADSCPRF

Field	Subfield or refinement	Entry	Explanation and action
	SNCONTRL	Y or N	Service node control. Indicates whether or not the service node acquires control of the call for this trigger event. A Y indicates that the service node acquires control. An N indicates that the service node is informed of the trigger event but call control remains at the TOPS switch. When set to N, the service node is given a minimum of information, mainly the session begin message. When set to Y, all event information is sent to the service node for it to determine processing. And, trigger processing is not performed, rather the node is informed of the events so that the node can determine the course of action. Therefore, this table (OADSCPRF) is only valid if SNCONTRL = N.
	ACTSEL	see subfield ACCTYPE	Action select. This field consists of subfield ACTTYPE.
	ACTTYPE	CTRLLIST or FUNCTION	Action type. Select either a list of services (CTRLLIST) or a single service (FUNCTION) to be performed if the the selected trigger occurs. If ACTTYPE = CTRLLIST, datafill subfield CTRLLIST. If ACTTYPE = FUNCTION, datafill subfield FUNCTION.
	CTRLLIST	name from table OACTLDEF	Control list. If ACTTYPE = CTRLLIST, datafill this refinement. Enter a control list name from table OACTLDEF. A control list is a list of services (defined in table OAFUNDEF) that are applied sequentially. The service provider must be a service node (field FUNCTYPE = SN in table OAFUNDEF). That is, at call float, a trigger event can only redirect a call to a service node.
	FUNCTION	name from table OAFUNDEF	Function. If ACTTYPE = FUNCTION, datafill this refinement. Enter a function name from table OAFUNDEF. A function is a service. The service provider must be a service node (field FUNCTYPE = SN in table OAFUNDEF). That is, at call float, a trigger event can only redirect a call to a service node

OSSAIN Initial Release (continued)

Datafilling table OADSCPRF

Field	Subfield or refinement	Entry	Explanation and action
DTMFPRF		see subfield DTMFSEL	DTMF profile. This field consists of subfield DTMFSEL.
	DTMFSEL	Y or N	DTMF select. Enter Y for DTMF trigger processing of the call and datafill subfield DTMFIDX. Otherwise, enter N and no further refinements require datafilled.
	DTMFIDX	0 to 2046	DTMF index. Datafill this field if DTMFSEL = Y. Enter an index into table OADTFPRF.

Datafill example for table OADSCPRF

The following example shows sample datafill for table OADSCPRF.

MAP display example for table OADSCPRF

```
DISCIDX  PROFILE                                  DTMFPRF
-------------------------------------------------------
0        (PTYD Y FUNCTION ROUTE_NODE) $     Y 7
1         $                                 Y 4
```

Error messages for table OADSCPRF

The following error messages apply to table OADSCPRF.

Error messages for table OADSCPRF

Error message	Explanation and action
`NOT A VALID DISCONNECT TRIGGER`	Table OACNNPRF can only be datafilled with the following triggers: FLASH and CLGD. If an attempt is made to add or change the TRIGGER field to a value not in the above list, this error message is displayed.
`Only one action assignment allowed per trigger`	An attempt was made to add or change a tuple with more than one action assigned to the same trigger.
`DTMF index is not in table OADTFPRF`	An attempt was made to add or change a tuple to utilize a DTMF profile index not yet datafilled in table OADTFRPF.

Datafilling table OATLKPRF

OSSAIN Talking Profile was a new table in TOPS06 that selects services according to types of events during the talking part of the call. Trigger events only occur during call float. Only services provided by an OSSAIN node can be selected; that is, a TOPS operator or TOPS automated system cannot be selected.

Tables OAFUNDEF and OACTLDEF must be datafilled before this table.

Following is a description of the table:

Datafilling table OATLKPRF

Field	Subfield or refinement	Entry	Explanation and action
TALKIDX		0 to 2046	Talking index. Index into table from table OATPRFIX
PROFILE		see subfields	Profile. This field consists of subfields TRIGGER, SNCONTROL, STOPCNVT, GENAMA, RLSFWD, and ACTSEL.
	TRIGGER	NTFY, FLASH, CLGD, PTYD	Trigger. A list of trigger events during the talking part of the call (end with `$'). If no events are entered, no further refinements of PROFILE must be datafilled. Note, the MAP display also shows values TRMT, RING, OPLSF, NOANS, and ANS; however, these are not valid trigger events. Following are the valid events: NTFY - Notify. The notification event occurs when the notification timer expires prior to disconnect. The notification timer is only started if the notification event is datafilled in Table OATLKPRF. Then, the notification timer is started when answer is detected. Notification timers started by ACTS for coin notification take precedence over those specified by Table OATLKPRF. The notification time is initially specified by the NOTIFY_TIMER in table OAINPARM. If the NTFY event occurs and is selected, the call is routed to an OSSAIN node. Otherwise, if this event occurs but is not selected, notification for a coin call is routed to ACTS. Note, trigger processing is not supported for calls floated by ACTS.

OSSAIN Initial Release (continued)

Datafilling table OATLKPRF

Field	Subfield or refinement	Entry	Explanation and action
			FLASH - The calling party hook flashes. If this event occurs and is selected, the call is routed to an OSSAIN node. Otherwise, if this event occurs but is not selected, this event is ignored. Note, OSSAIN trigger processing is not supported for ACTS floated calls. Calls floated by ACTS are routed to an operator. CLGD - Calling disconnect. The calling party goes on-hook. If this event occurs and is selected, the call is routed to an OSSAIN node. Otherwise, if this event occurs but is not selected, trigger processing transitions to post disconnect processing. Note, OSSAIN trigger processing is not supported for calls requiring Time and Charges. These calls are routed to ACTS or an operator. PTYD - Party disconnect. Any party, other than the calling party, that goes on-hook. If this event occurs and is selected, the call is routed to an OSSAIN node. Otherwise, if this event occurs but is not selected, trigger processing transitions to post disconnect processing. Note, OSSAIN trigger processing is not supported for calls requiring Time and Charges. These calls are routed to ACTS or an operator.
	SNCONTRL	Y or N	Service node control. Indicates whether or not the service node acquires control of the call for this trigger event. A Y indicates that the service node acquires control. An N indicates that the service node is informed of the trigger event but call control remains at the TOPS switch. When set to N, the service node is given a minimum of information, mainly the session begin message. When set to Y, all event information is sent to the service node for it to determine processing. And, trigger processing is not performed, rather the node is informed of the events so that the node can determine the course of action. Therefore, this table (OATLKPRF) is only valid if SNCONTRL = N.

OSSAIN Initial Release (continued)

Datafilling table OATLKPRF

Field	Subfield or refinement	Entry	Explanation and action
	STOPCNVT	N	Stop conversation timing when processing the trigger event. This capability is only supported by functionality OSSAIN 07 Enhancements, OSAN0101. Therefore, enter the default, N.
	GENAMA	N	Generate an AMA record when processing the trigger event. This capability is only supported by functionality OSSAIN 07 Enhancements, OSAN0101. Therefore, enter the default, N.
	RLSFWD	N	Release the forward party when processing the trigger event. This capability is only supported by functionality OSSAIN 07 Enhancements, OSAN0101. Therefore, enter the default, N.
	ACTSEL	see subfield ACCTYPE	Action select. This field consists of subfield ACTTYPE.
	ACTTYPE	CTRLLIST or FUNCTION	Action type. Select either a list of services (CTRLLIST) or a single service (FUNCTION) to be performed if the the selected trigger occurs. If ACTTYPE = CTRLLIST, datafill subfield CTRLLIST. If ACTTYPE = FUNCTION, datafill subfield FUNCTION.
	CTRLLIST	name from table OACTLDEF	Control list. If ACTTYPE = CTRLLIST, datafill this refinement. Enter a control list name from table OACTLDEF. A control list is a list of services (defined in table OAFUNDEF) that are applied sequentially. The service provider must be a service node (field FUNCTYPE = SN in table OAFUNDEF). That is, at call float, a trigger event can only redirect a call to a service node.
	FUNCTION	name from table OAFUNDEF	Function. If ACTTYPE = FUNCTION, datafill this refinement. Enter a function name from table OAFUNDEF. A function is a service. The service provider must be a service node (field FUNCTYPE = SN in table OAFUNDEF). That is, at call float, a trigger event can only redirect a call to a service node

OSSAIN Initial Release (continued)

Datafilling table OATLKPRF

Field	Subfield or refinement	Entry	Explanation and action
STAR		see subfield DIGITSEL	Star key. Service selection associated with DTMF * digit. This field consists of subfield DIGITSEL.
	DIGITSEL	Y or N	Digit select. Enter Y to enable trigger by DTMF * digit. Otherwise, enter N. If set to Y, datafill subfields GENAMA, RLSFWD, and ACTSEL.
	STOPCNVT	N	Stop conversation timing when processing the trigger event. This capability is only supported by functionality OSSAIN 07 Enhancements, OSAN0101. Therefore, enter the default, N.
	GENAMA	Y or N	Generate AMA. If DIGITSEL = Y, datafill this refinement. Enter Y to generate AMA when processing a DTMF * digit event. Otherwise, enter N.
	RLSFWD	Y or N	Release forward party. If DIGITSEL = Y, datafill this refinement. Enter Y to release the forward party when processing a DTMF* digit event. Otherwise, enter N.
	ACTSEL	see subfield ACCTYPE	Action select. If DIGITSEL = Y, datafill this refinement. This field consists of subfield ACTTYPE.
	ACTTYPE	FUNCTION or CTRLLIST	Action type. Select either a single service (FUNCTION) or list of services (CTRLLIST) to be performed if the the selected trigger occurs. If ACTTYPE = CTRLLIST, datafill subfield CTRLLIST. If ACTTYPE = FUNCTION, datafill subfield FUNCTION.
	CTRLLIST	name from table OACTLDEF	Control list. If ACTTYPE = CTRLLIST, datafill this refinement. Enter a control list name from table OACTLDEF. A control list is a list of services (defined in table OAFUNDEF) that are applied sequentially. The service provider must be a service node (field FUNCTYPE = SN in table OAFUNDEF). That is, at call float, a trigger event can only redirect a call to a service node.

Datafilling table OATLKPRF

Field	Subfield or refinement	Entry	Explanation and action
	FUNCTION	name from table OAFUNDEF	Function. If ACTTYPE = FUNCTION, datafill this refinement. Enter a function name from table OAFUNDEF. A function is a service. The service provider must be a service node (field FUNCTYPE = SN in table OAFUNDEF). That is, at call float, a trigger event can only redirect a call to a service node
OCTO		see subfield DIGITSEL	Octothorpe key. Service selection associated with DTMF # digit. This field consists of subfield DIGITSEL.
	DIGITSEL	Y or N	Digit select. Enter Y to enable trigger by DTMF # digit. Otherwise, enter N. If set to Y, datafill subfields GENAMA, RLSFWD, and ACTSEL.
	STOPCNVT	N	Stop conversation timing when processing the trigger event. This capability is only supported by functionality OSSAIN 07 Enhancements, OSAN0101. Therefore, enter the default, N.
	GENAMA	Y or N	Generate AMA. If DIGITSEL = Y, datafill this refinement. Enter Y to generate AMA when processing a DTMF # digit event. Otherwise, enter N.
	RLSFWD	Y or N	Release forward party. If DIGITSEL = Y, datafill this refinement. Enter Y to release the forward party when processing a DTMF# digit event. Otherwise, enter N.
	ACTSEL	see subfield ACCTYPE	Action select. If DIGITSEL = Y, datafill this refinement. This field consists of subfield ACTTYPE.
	ACTTYPE	FUNCTION or CTRLLIST	Action type. Select either a single service (FUNCTION) or list of services (CTRLLIST) to be performed if the the selected trigger occurs. If ACTTYPE = CTRLLIST, datafill subfield CTRLLIST. If ACTTYPE = FUNCTION, datafill subfield FUNCTION.

OSSAIN Initial Release (continued)

Datafilling table OATLKPRF

Field	Subfield or refinement	Entry	Explanation and action
	CTRLLIST	name from table OACTLDEF	Control list. If ACTTYPE = CTRLLIST, datafill this refinement. Enter a control list name from table OACTLDEF. A control list is a list of services (defined in table OAFUNDEF) that are applied sequentially. The service provider must be a service node (field FUNCTYPE = SN in table OAFUNDEF). That is, at call float, a trigger event can only redirect a call to a service node.
	FUNCTION	name from table OAFUNDEF	Function. Control list. If ACTTYPE = FUNCTION, datafill this refinement. Enter a function name from table OAFUNDEF. A function is a service. The service provider must be a service node (field FUNCTYPE = SN in table OAFUNDEF). That is, at call float, a trigger event can only redirect a call to a service node
HOLDRCVR		Y or N	Hold receiver. Enter Y to retain the DTMF receiver when transitioning to a service node. Otherwise, enter N.

Datafill example for table OATLKPRF

The following example shows sample datafill for table OATLKPRF.

MAP display example for table OATLKPRF

```
TALKIDX   PROFILE
          STAR
          OCTO                                    HOLDRCVR
-----------------------------------------------------------
0         (FLASH N N N Y FUNCTION TOLL_OPER)
          (NTFY Y N N N FUNCTION NEW_ACTS)$
            N
            N                                      Y
1         (PTYD N N N Y CTRLLIST ROUTE_NODE)
          (Y N Y N CTRLLIST RTE_NODE)
           (Y N Y N CTRLLIST RTE_NODE              Y
```

Error messages for table OATLKPRF

The following error messages apply to table OATLKPRF.

Error messages for table OATLKPRF

Error message	Explanation and action
ONLY ONE DIGIT STAR OR OCTO CAN BE DATAFILLED	Only one DTMF digit event, STAR or OCTO, can be datafilled within the same tuple. If an attempt is made to datafill both STAR and OCTO trigger events, this error message is displayed.
RLSFWD MUST BE SET TO Y WHEN GENAMA IS SET TO Y	When setting the GENAMA field to Y, the RLSFWD field must also be set to Y. If an attempt is made to set GENAMA to Y while setting RLSFWD to N, this error message is displayed.
NOT A VALID TALKING TRIGGER	This message is displayed if an attempt is made to datafill an invalid value in field TRIGGER. Valid values are FLASH, CLGD, PTYD and NTFY.
Only one action assignment allowed per trigger	This message is displayed if an attempt is made to add or change a tuple with more than one action assigned to the same trigger.

Datafilling table OACNNPRF

OSSAIN Connecting Profile was a new table in TOPS06 that selects services according to types of trigger events while a call is being connected. Trigger events only occur during call float. Only services provided by an OSSAIN node can be selected; that is, a TOPS operator or TOPS automated system cannot be selected.

Tables OAFUNDEF, OACTLDEF, OADTFPRF, and OACAUPRF must be datafilled before this table.

Following is a description of the table:

Datafilling table OACNNPRF

Field	Subfield or refinement	Entry	Explanation and action
CONNIDX		0 to 2046	Connect index. Index into table from table OATPRFIX.
PROFILE		see subfields	Profile. This field consists of subfields TRIGGER, SNCONTROL and ACTSEL.

OSSAIN Initial Release (continued)

Datafilling table OACNNPRF

Field	Subfield or refinement	Entry	Explanation and action
	TRIGGER	OPLSF, NOANS, FLASH, CLGD, ANS, TRMT, RING	Trigger. A list of trigger events during call connection (end with `$'). If no events are entered, no further refinements of PROFILE must be datafilled. Note, the MAP display also shows values NTFY, and PTYD; however, these are not valid trigger events. Following are the valid events: OPLSF - Outpulsing failure. Outpulsing may fail due to glare or an inoperable trunk in the terminating office. To account for these conditions the DMS switch automatically makes another attempt at routing the call to the terminating party. This event occurs after the second attempt fails. If this event occurs and is selected, the call is routed to an OSSAIN node. Otherwise, if this event occurs but is not selected, the call is taken down.

OSSAIN Initial Release (continued)

Datafilling table OACNNPRF

Field	Subfield or refinement	Entry	Explanation and action
			NOANS - No answer. The call is not answered. No answer occurs when the no answer timer expires before answer. The no answer timer is only started if the no answer event is datafilled in table OACNNPRF. Then, the no answer timer is started upon successful outpulsing of all digits on an MF or DP trunk. And, the no answer timer is started upon receiving an Address Complete Message (ACM) on an ISUP trunk. The no answer time is initially specified by the NOANS_TIMER in table OAINPARM. If this event occurs and is selected, the call is routed to an OSSAIN node. Otherwise, if this event occurs but is not selected, the no answer timer is not started and eventually the calling party goes on-hook. FLASH - The calling party hook flashes. If this event occurs and is selected, the call is routed to an OSSAIN node. Otherwise, if this event occurs but is not selected, this event is ignored. Note, OSSAIN trigger processing is not supported for automatic coin toll service (ACTS) floated calls. Calls floated by ACTS are routed to an operator. CLGD - Calling disconnect. The calling party goes on-hook. If this event occurs and is selected, the call is routed to an OSSAIN node. Otherwise, if this event occurs but is not selected, the call is taken down. Then, the call may be routed to ACTS or an operator for time and charges. Note, OSSAIN trigger processing is not supported for calls requiring time and charges. These calls are routed to ACTS or an operator.

OSSAIN Initial Release (continued)

Datafilling table OACNNPRF

Field	Subfield or refinement	Entry	Explanation and action
			ANS - Answer. The terminating party answers. If this event occurs and is selected, the call begins, a connection timestamp is taken, and routed to an OSSAIN node. Otherwise, if this event occurs but is not selected, the call begins and a connection timestamp is taken. TRMT - Treatment. The call receives a local DMS switch treatment for conditions such as all trunks busy or vacant code. If this event occurs and is selected, the call is routed to an OSSAIN node. Calls floated to treatment cannot trigger to treatment. RING - Ringing. The call has terminated to an ISUP trunk. The terminating office indicates ringing by sending an ACM message, with the Called Party Status field set to `Subscriber Free' or `Connect When Free', back to the TOPS office. If this event occurs and is selected, the call is routed to an OSSAIN node. Otherwise, if this event occurs but is not selected, ringing is supplied to the originator by the terminating office.
	SNCONTRL	Y or N	Service node control. Indicates whether or not the service node acquires control of the call for this trigger event. A Y indicates that the service node acquires control. An N indicates that the service node is informed of the trigger event but call control remains at the TOPS switch. When set to N, the service node is given a minimum of information, mainly the session begin message. When set to Y, all event information is sent to the service node for it to determine processing. And, trigger processing is not performed, rather the node is informed of the events so that the node can determine the course of action. Therefore, this table (OACNNPRF) is only valid if SNCONTRL = N.
	ACTSEL	see subfield ACCTYPE	Action select. This field consists of subfield ACTTYPE.

Datafilling table OACNNPRF

Field	Subfield or refinement	Entry	Explanation and action
	ACTTYPE	FUNCTION or CTRLLIST	Action type. Select either a single service (FUNCTION) or list of services (CTRLLIST) to be performed if the the selected trigger occurs. If ACTTYPE = CTRLLIST, datafill subfield CTRLLIST. If ACTTYPE = FUNCTION, datafill subfield FUNCTION.
	CTRLLIST	name from table OACTLDEF	Control list. If ACTTYPE = CTRLLIST, datafill this refinement. Enter a control list name from table OACTLDEF. A control list is a list of services (defined in table OAFUNDEF) that are applied sequentially. The service provider must be a service node (field FUNCTYPE = SN in table OAFUNDEF). That is, at call float, a trigger event can only redirect a call to a service node.
	FUNCTION	name from table OAFUNDEF	Function. If ACTTYPE = FUNCTION, datafill this refinement. Enter a function name from table OAFUNDEF. A function is a service. The service provider must be a service node (field FUNCTYPE = SN in table OAFUNDEF). That is, at call float, a trigger event can only redirect a call to a service node.
DTMFPRF		see subfield DTMFSEL	DTMF select. This field consists of subfield DTMFSEL.
	DTMFSEL	Y or N	DTMF profile. Enter Y for DTMF trigger processing of the call and datafill subfield DTMFIDX. Otherwise, enter N.
	DTMFIDX	0 to 2046	DTMF index. Datafill this field only if DTMFSEL = Y. Enter an index into table OADTFPRF.
CAUSEPRF		see subfield CAUSESEL	Cause profile. This field consists of subfield CAUSESEL.
	CAUSESEL	Y or N	Cause select. Enter Y to trigger for ISUP cause events and datafill subfield CAUSEIDX. Otherwise, enter N.
	CAUSEIDX	0 to 2046	CAUSE index. Datafill this field only if CAUSESEL = Y. Enter an index into table OACAUPRF.

OSSAIN Initial Release (continued)

Datafill example for table OACNNPRF

The following example shows sample datafill for table OACNNPRF.

MAP display example for table OACNNPRF

```
CONNIDX  PROFILE                              DTMFPRF  CAUSEPRF
-------------------------------------------------------------
0       (NOANS Y FUNCTION ROUTE_NODE)$   Y 7      Y 3
1       (NOANS Y CTRLLIST Y_PAGES) $     N        Y 3
```

Error messages for table OACNNPRF

The following error messages apply to table OACNNPRF.

Error messages for table OACNNPRF

Error message	Explanation and action
`NOT A VALID CONNECTION TRIGGER`	This message is displayed if an attempt is made to datafill an invalid value in field TRIGGER. Valid values are TRMT, OPLSF, NOANS, FLASH CLGD, and ANS.
`Only one action assignment allowed per trigger`	This message is displayed if an attempt is made to add or change a tuple with more than one action assigned to the same trigger.
`DTMF index is not in table OADTFPRF`	This message is displayed if an attempt is made to datafill field DTMFIDX with a value not in table OADTFPRF.
`CAUSE index is not in table OACAUPRF`	This message is displayed if an attempt is made to datafill field CAUSEIDX with a value not in table OACAUPRF.

Datafilling table OATPRFIX

OSSAIN Trigger Profile Index was a new table in TOPS06 that indexes into tables OACNNPRF, OATLKPRF, and OADSCPRF. Table OATPRFIX aggregates the OACNNPRF/OATLKPRF/OADSCPRF profile indices into a single call trigger profile index. This aggregation allows for ease in assigning the initial call trigger profile index in Table OAINCTLA.

Tables OACNNPRF, OATLKPRF, and OADSCPRF must be datafilled prior to datafilling this table.

Following is a description of the table:

Datafilling table OATPRFIX

Field	Subfield or refinement	Entry	Explanation and action
IDX		0 to 2046	Index. Index into table from table OAINCTLA.
CPROFIDX		See subfield PROFSEL	Connection profile index. This field consists of subfield PROFSEL.
	PROFSEL	N or Y	Connection profile select. Enter Y to index into table OACNNPRF and datafill refinement PROFIDX. Otherwise, enter N.
	PROFIDX	0 to 2046	Connection profile index. If PROFSEL = Y, enter an index into table OACNNPRF.
TPROFIDX		See subfield PROFSEL	Talking profile index. This field consists of subfield PROFSEL.
	PROFSEL	N or Y	Talking profile select. Enter Y to index into table OATLKPRF and datafill refinement PROFIDX. Otherwise, enter N.
	PROFIDX	0 to 2046	Talking profile index. If PROFSEL = Y, enter an index into table OATLKPRF.
DPROFIDX		See subfield PROFSEL	Disconnect profile index. This field consists of subfield PROFSEL.
	PROFSEL	N or Y	Disconnect profile select. Enter Y to index into table OADSCPRF and datafill refinement PROFIDX. Otherwise, enter N.
	PROFIDX	0 to 2046	Disconnect profile index. If PROFSEL = Y, enter an index into table OADSCPRF.

Datafill example for table OATPRFIX

The following example shows sample datafill for table OATPRFIX.

MAP display example for table OATPRFIX

```
IDX  CONNIDX  TALKIDX  DISCIDX
-------------------------------------------------------
0     Y 4      Y 2      Y 7
1     Y 2      Y 2      Y 3
```

OSSAIN Initial Release (continued)

Error messages for table OATPRFIX

The following error messages apply to table OATPRFIX.

Error messages for table OATPRFIX

Error message	Explanation and action
`Connection profile is not in table OACNNPRF`	This message is displayed if an attempt is made to datafill field CPROFIDX with a value not in table OACNNPRF
`Talking profile is not in table OATLKPRF`	This message is displayed if an attempt is made to datafill field TPROFIDX with a value not in table OATLKPRF
`Disconnect profile is not in table OADSCPRF`	This message is displayed if an attempt is made to datafill field DPROFIDX with a value not in table OADSCPRF

Datafilling table OAINCTLA

OSSAIN Control List Assignment was a new table in TOPS06 that defines the OSSAIN control list (list of services applied sequentially) and call trigger profile index for each CT4Q name utilized by OSSAIN. Each CT4Q datafilled in this table must first be assigned in table CT4QNAMS with the SYSTEM selector set to OSSAIN. The control list names must be datafilled in table OACTLDEF. The profile index must be datafilled in table OATPRFIX.

Tables CT4QNAMS, OACTLDEF, and OATPRFIX must be datafilled before table OAINCTLA.

Following is a description of the table:

Datafilling table OAINCTLA

Field	Subfield or refinement	Entry	Explanation and action
CT4Q		name from table CT4QNAMS	Call type for queueing name. Index into table from table CT4QNAMS. Each CT4Q datafilled in this table must first be assigned in table CT4QNAMS with the SYSTEM selector set to OSSAIN.
OALISTNM		control list name from table OACTLDEF.	OSSAIN list name. A control list is a list of services that are applied sequentially.

Datafilling table OAINCTLA

Field	Subfield or refinement	Entry	Explanation and action
OATPRFIX		See subfield PROFSEL.	OSSAIN profile prefix. This field consists of subfield PROFSEL.
	PROFSEL	N or Y	OSSAIN profile select. Enter Y to index into table OATPRFIX and datafill refinement IDXVAL. Otherwise, enter N.
	IDXVAL	0-2046	OSSAIN profile index. If PROFSEL = Y, enter an index into table OATPRFIX.

Datafill example for table OAINCTLA

The following example shows sample datafill for table OAINCTLA.

MAP display example for table OAINCTLA

```
CT4Q        OALISTNM        OATPRFIX
-------------------------------------------------------
0+YELLOW    YEL_PAGE        Y 7
OSS_DA      DA_SYSTEM       Y 1
```

Error messages for table OAINCTLA

The following error messages apply to table OAINCTLA.

Error messages for table OAINCTLA

Error message	Explanation and action
`Trigger profile is not in table OATPRFIX`	An attempt is made to add or change a tuple to utilize a trigger profile not yet datafilled in table OATPRFIX.

Datafilling table OAINPARM

OSSAIN Parameters was a new table in TOPS06 that contains OSSAIN specific parameters.

In TOPS07, parameter ALT_BILL_HANDOFF_METHOD is added and the range for NOTIFY_TIMER is increased from 0-3600 to 0-32400.

The profile index must be datafilled in table OATPRFIX prior to datafilling in table OAINPARM.

OSSAIN Initial Release (continued)

The following is a description of the table:

Datafilling table OAINPARM

Parameter name	Explanation and action
ADACC_ALT_BILL_INDEX	This parameter indicates if an ADACC call requiring alternate billing can be routed to an OSSAIN service node by a Control List for billing verification. The values are: • N - No, do not attempt to route to OSSAIN. Then, ADACC alternate billing calls are sent to AABS. This is the same handling as prior to OSSAIN. • Y <number> - Yes, attempt to route to OSSAIN using the specified control list number previously datafilled in table OACTLDEF. The call will fail to route to OSSAIN due to any one of the following conditions: — The call is not sent to a control list that routes to a service node. — OSSAIN is not available due to lack of software resources. — OSSAIN is not SOCed on. • The call is not using the QMS queuing system. If any of the above conditions occur, the call is treated as if ADACC_ALT_BILL_INDEX was set to N.
ALT_BILL_HANDOFF_ METHOD	This parameter specifies handling of operator handoff calls. The values are the following: • AABS - Calls are sent to the existing TOPS AABS system for billing acceptance, provided the call passes various checks that verify the call's eligibility for handoff. This functionality does not change the checks that are done for AABS handoff, nor any operator displays. This is the default value. With an AABS handoff, VSNOPT parameter NUM_HANDOFFS_ALLOWED specifies the maximum number of handoffs that a single call can undertake. This parameter continues to apply to handoffs to AABS, but not OSSAIN service nodes. • OSSAIN ct4q - Calls are placed in the specified CT4Q and then routed to an OSSAIN service node. The CT4Q must be datafilled in table CT4QNAMS with field SYSTEM set to OSSAIN. For more information on how the call is routed to an OSSAIN service node using a CT4Q, refer to section “Transitions" where transfers are discussed for an operator to an OSSAIN service node.

Datafilling table OAINPARM

Parameter name	Explanation and action
	When the operator marks a call for handoff, eligibility checks are the same for AABS and OSSAIN service nodes. In particular, it should be noted that VSNOPT parameter NUM_AUTO_LANGS_REQD_FOR_HANDOFF applies equally to operator handoffs for AABS and OSSAIN service nodes. If any of the eligibility checks fail, the operator receives the same error displays for the failed AABS or OSSAIN handoff mark.
AUTO_ALT_BILL_TRIG_ PROFILE_INDEX	Enables/disables OSSAIN floated trigger processing for calls floated by the Automated Alternate Billing System (AABS) or Mechanized Credit Card System (MCCS). If enabled, a trigger profile index into table OATPRFIX must be specified in the parameter entry. This trigger profile index is only applied to a call floated by AABS or MCCS if the call has not yet received OSSAIN processing. Its purpose is to provide an initial profile index. For calls floated by AABS or MCCS already receiving OSSAIN service the trigger profile index is not modified. The range is N or Y. If set to Y, add value in range 0 to 2046 for an index into table OATPRFIX.
CALL_SANITY_TIMER_ DURATION	This is a timer to ensure that service node connections (data and/or voice), subscriber connections, and switch related call resources such as extension blocks are not left connected to a dead call. The timer is set when no parties (calling and called) are present (either disconnected or the on-hook timer has expired). The timer is cleared if the subscriber is subsequently connected to the call. The duration of the timer is determined by this parameter, but can be overridden by field CALLTMR in table OASESNPL. If set to USEDEFLT, parameter CALL_SANITY_TIMER_DURATION determines the timer duration. If CALLTMR = OVERRIDE, the value after this field gives the duration of the timer. When the timer expires, the call is taken down by the switch and an OAIN601 log is generated. The switch informs the node that the call has been taken down, releases the data and voice connections to the node, releases all subscriber connections involved in the call, cancels any outstanding requests, and frees all switch related call resources (for example, extension blocks, and so forth). The range of parameter CALL_SANITY_TIMER_DURATION is 1 to 3600 seconds. The default is 60.

OSSAIN Initial Release (continued)

Datafilling table OAINPARM

Parameter name	Explanation and action
DEFAULT_TREATMENT	This parameter indicates the treatment name from table TMTCNTL to route the call to if a default treatment is required for an OSSAIN call.
MAX_ALLOWED_ TRANSITIONS	This parameter indicates the maximum number of allowed successful transitions which consist of direct transfers to control lists. When the number of transitions reaches the value of this parameter, the call is routed to the treatment specified in parameter DEFAULT_TREATMENT of this table (OAINPARM). There is a counter for each call which is zeroed at the beginning of the call and at any time that call is floated. The counter is incremented each time a successful direct transfer to a control list occurs. The purpose of this parameter is to prevent the call from going into an endless number of cycles. The range of this parameter is 0 to 20. The default is 5.
MAX_NUM_TRIGGERS	This parameter determines the maximum number of times a call is allowed to trigger during call float. This prevents the call from going into an endless number of cycles. The range is 0 to 100.
MAX_TRANSFERS_ BEFORE_CONNECT	This parameter indicates the maximum number of transfers that can occur while attempting to connect a call to a service node for a particular function. Transfers in the switch can result from a QMS deflection or overflow, a blocked function, and, or a failure to send an OAP Session Begin message to a node after the session for the call has already been selected. When the number of transfers reaches the value of this parameter, the call is routed to the treatment specified in DEFAULT_TREATMENT. Once a successful connection to a service node is made, the switch resets its internal transfer counter. The range of values is 0 to 5.
NOANS_TIMER	The amount of time to wait for an answer to a call before the No Answer trigger occurs. The range is 1 to 120 (seconds).
NOTIFY_TIMER	The amount of time a call must spend in the talking state for the Notification trigger event to occur. The range is 1 to 32400 (seconds).

OSSAIN Initial Release (continued)

Datafilling table OAINPARM

Parameter name	Explanation and action
ON_HOOK_TIMER_ DURATION	This is a timer to ensure that a call does not remain connected forever after a subscriber goes on-hook or is released. This timer may not apply to standard ISUP since ISUP facilities can automatically be cleared upon disconnect. The timer is set when the subscriber goes on-hook and cannot be reset. The timer is cleared if the subscriber's facility is released or the call is taken down for any reason. The duration of the timer is determined by this parameter, but can be overridden by field ONHKTMR in table OASESNPL. If set to USEDEFLT, parameter ON_HOOK_TIMER_DURATION determines the timer duration. If ONHKTMR = OVERRIDE, the value after this field gives the duration of the timer. If the timer expires, an OAIN600 log is generated and the call sanity timer is initiated if appropriate. Refer to the CALL_SANITY_TIMER_DURATION parameter in this table (OAINPARM) for further details. The range of parameter ON_HOOK_TIMER_DURATION is 1 to 3600 (seconds). The default is 60.
OPR_TRIGGER_ PROFILE_INDEX	Enables/disables OSSAIN floated trigger processing for calls floated by the operator. If enabled, a trigger profile index into table OATPRFIX must be specified in the parameter entry. This trigger profile index is only applied to a call floated by the operator if the call has not received OSSAIN processing. (Note, OSSAIN processing is indicated once an OSSAIN control list or OSSAIN function has been assigned to the call.) For calls floated by the operator that are already receiving OSSAIN service, the trigger profile index is not modified. Calls receiving Directory Assistance (DA) service perform trigger processing pointed to by OPR_TRIGGER_PROFILE_INDEX. This is done since DA calls receive operator handling. This includes calls receiving ADAS, ADASPLUS, and ADACC services. Directory assistance calls must first perform call completion service to be eligible for trigger processing. The range is N or Y. If set to Y, add value in range 0 to 2046 for an index into table OATPRFIX.

Datafill example for table OAINPARM

The following example shows sample datafill for table OAINPARM.

OSSAIN Initial Release (continued)

MAP display example for table OAINPARM

```
PARMNAME                                          PARMVAL
-------------------------------------------------------
ADACC_ALT_BILL_INDEX                               Y 100
ALT_BILL_HANDOFF_METHOD                            OSSAIN DA_411
AUTO_ALT_BILL_TRIG_PROFILE_INDEX                   Y 2
CALL_SANITY_TIMER_DURATION                         423
DEFAULT_TREATMENT                                  TREAT VACT
MAX_ALLOWED_TRANSITIONS                            15
MAX_NUM_TRIGGERS                                   15
MAX_TRANSFERS_BEFORE_CONNECT                       5
NOANS_TIMER                                        20
NOTIFY_TIMER                                       180
ON_HOOK_TIMER_DURATION                             368
OPR_TRIGGER_PROFILE_INDEX                          Y 7
```

Error messages for table OAINPARM

The following error messages apply to table OAINPARM.

Error messages for table OAINPARM

Error message	Explanation and action
`Trigger profile is not in table OATPRFIX`	This message is displayed if an attempt is made to add or change a parameter with a trigger profile index not datafilled in table OATPRFIX.

Datafilling table TOPSPARM

The following parameters were added in TOPS06:

Datafilling table TOPSPARM

Parameter name	Explanation and action
DISPLAY_CALLED_ NUMBER	This parameter indicates the type of TOPS position to receive the called number from the DMS switch, if sent. Following are the values: • NONE - The called number is not sent to any TOPS position. • MP - The called number is sent and displayed at TOPS MP positions. • OPP - The called number is sent and displayed at OPP-compatible positions. • BOTH - The called number is sent and displayed at both TOPS MP and OPP-compatible positions.
AUTO_OUTPULSE_UPON_ CCV_SUCCESS	This parameter determines whether the DMS switch automatically outpulses the forward number if a valid calling card is entered. The values are Y (auto outpulse, the same as prior to OSSAIN) and N (no auto outpulse).

Datafill example for table TOPSPARM

The following example shows sample datafill for table TOPSPARM.

MAP display example for table TOPSPARM

```
PARMNAME                                          PARMVAL
------------------------------------------------------------
DISPLAY_CALLED_NUMBER                             NONE
AUTO_OUTPULSE_UPON_CCV_SUCCESS                    Y
```

Translation verification tools

QCALL and QVIEW utilities

The QCALL and QVIEW utilities were modified in TOPS06. Prior operation of these utilities is described in the Remote QMS functionality, ADVQ0004.

QCALL utility

The QCALL directory details the refinement and call assignment information of one particular call having a unique set of characteristics.

The START command displays the final CT4Q assignment information based on the call criteria. This command is changed to add information for OSSAIN.

OSSAIN Initial Release (continued)

For CT4Qs assigned to an operator, the CallQ and QMS Service are displayed. For CT4Qs assigned to OSSAIN, the OSSAIN Control List is displayed. Following is an example display where the new information is highlighted:

QCALL START command example display of final CT4Q assignment information

```
STARTing simulated call queue assignment processing.

   Initial CT4Q = UNSPEC
     CT4Q after CT4QCLAS refinement = UNSPEC
     CT4Q after CT4QORIG refinement = UNSPEC

   The final CT4Q is: DEBIT
   The OA Control List is: DEBIT_LIST

Determining Force Management Call Type (FMCT)

   Initial FMCT = UNSPEC
     FMCT after TQFMCLAS refinement = UNSPEC
     FMCT after TQFMREST refinement = UNSPEC
     FMCT after TQFMDCLT refinement = DEBIT

The final FMCT is: DEBIT
```

QVIEW utility

The QVIEW directory details the refinement and call assignment information of a whole set of calls with all of their possible characteristics.

The START command displays the final CT4Q assignment information based on call criteria. This command is changed to add information for OSSAIN. For CT4Qs assigned to an operator, the CallQ and QMS Service are displayed. For CT4Qs assigned to OSSAIN, the OSSAIN Control List is displayed. Following is an example display where the new information is highlighted.

The report generated by this command has changed to display either the CallQ and QMS service for calls routed to a TOPS operator or a control list for calls routed to OSSAIN. To accommodate this, the old header CALLQ QMSSERV has been changed to a more general heading, ASSIGNMENT INFO. If the CT4Q is for use by a TOPS operator, the CallQ and QMS service are displayed beneath this header. If the CT4Q is for use by OSSAIN, the control list is displayed beneath the header.

QVIEW report example

```
          ** QVIEW REPORT on ACTIVE table for PREOPR Ordering

              CO: OA                        -->>> CT4Q: 0_DEBIT

OLDCT4Q       TABLE     CRITERION     NEWCT4Q          ASSIGNMENT INFO

0_DEBIT       ORIG       T1_ORIG      DEBIT_0          CTRL: DEBIT_CTL
0_DEBIT       ORIG       T1_ORIG      DEBIT_1          CTRL: DEBIT_CTL
0_DEBIT       ORIG       T1_ORIG      DEBIT_2          CTRL: DEBIT_CTL
0_DEBIT        OAINCTLA                                 DEBIT_CTLC


              CO: OA                        -->>> CT4Q: INWARD_121


OLDCT4Q       TABLE     CRITERION      NEWCT4Q         ASSIGNMENT INFO

INWARD_121     ORIG      T1_ORIG       MP1_INW          CQ53  T_TA
INWARD_121     ORIG      T2_ORIG       MP1_INW          CQ63  T_TA
INWARD_121     ORIG      T3_ORIG       MP1_INW          CQ83  T_TA
INWARD_121     TQMSFCQA                                 CQ8   T_TA

------------------------------------------------------------------------
 SUMMARY REPORT on ACTIVE table for PREOPR Ordering
------------------------------------------------------------------------
      CT4Q TABLE                  NUMBER OF REFINEMENTS
      ----------                  ---------------------
        CT4QORIG                            3

CT4Qs NOT assigned a call queue or control list:

         CT4Q                               TABLE
        -------                             -----

CALLQs NOT assigned a QMS service:
```

In the above example, the first part illustrates assignment information for a CT4Q routing to an OSSAIN control list called DEBIT_CT. The second part illustrates assignment information for a CT4Q assigned a CallQ and Service.

SERVORD

TOPS does not use SERVORD.

OSSAIN 07 Enhancements

Ordering codes

Functional group ordering code: OSAN0101

Functionality ordering code: not applicable

Release applicability

TOPS07 and up

OSSAIN 07 Enhancements was introduced in TOPS07.

Prerequisites

To operate, OSSAIN Initial Release has the following prerequisites:

- BAS Generic, BAS00003
- Operator Services Basic, OSB00101, and table TOPSFTR parameter TOPS_ON_OFF_SWITCH = Y
- OSSAIN Initial Release, OSAN0101, and table TOPSFTR parameter OSSAIN_INITIAL_RELEASE = Y
- Table TOPSFTR parameter OSSAIN_RELEASE_07 = Y

Description

OSSAIN Initial Release (OSAN0101)

Operator services systems advanced intelligent network (OSSAIN) allows service nodes to provide services to switches independently of switch software releases. This allows for faster development of new services. New services can be developed and deployed on OSSAIN service nodes without Digital Multiplex Switch (DMS) switch software development. For further information, refer to functionality OSSAIN Initial Release, OSAN0101.

OSSAIN 07 Enhancements (OSAN0101)

This functionality extends OSSAIN by adding OSSAIN centralization (OSAC). OSAC allows service node resources to be provided to OSAC remote switches as well as the OSAC host switch.

OSSAIN 07 Enhancements (continued)

This functionality is provided by the following features:

Features in this functionality

Feature number	Feature name
AN1536	OSSAIN Centralization (TOPS07)
AN1867	OSSAIN Enhancements (TOPS07)
AN1899	OSSAIN Maintenance Enhancements (TOPS07)
AN1926	OSSAIN Simultaneous Connections (TOPS07)
AN6493	OSSAIN Enhancements II (TOPS07)
AN6495	TL Changes for OSSAIN Centralization (TOPS07)
BY65801	Expand OSSAIN Trigger Table Indicies (TOPS08)

For additional information, refer to the *TOPS OSSAIN User Guide*, 297-8403-901. This document is an all inclusive guide to TOPS OSSAIN containing all that is in this translations guide plus signaling protocol, maintenance, and operator usage.

Operation

Contents

The contents of this section are the following: Note, sections that changed from TOPS06 (ENV0014) or are new in TOPS07 are indicated.

- OSSAIN history
- Optionality
- Defining OSSAIN nodes - changed
  - — Standalone configuration - changed
  - — OSAC configuration - new
  - — Two switches acting as host, remote, or standalone - new
  - — Simultaneous interactions - new
- Defining voice links
  - — Standalone configuration - unchanged
  - — OSAC configuration - new
- OSAC engineering hardware - new

OSSAIN 07 Enhancements (continued)

- Selecting functions (services)
  - — Select OSSAIN - unchanged
  - — OSSAIN preprocessing - new
  - — Select initial service - unchanged
  - — DA calls - unchanged
  - — Routing ADACC alternate billing calls to OSSAIN - unchanged
  - — Base service type - unchanged
  - — Block initial service - unchanged
  - — Error handling - new
  - — Non-OSSAIN calls - unchanged
  - — Call float - unchanged
  - — Transfer to IC - unchanged
  - — Trigger processing for subsequent service - unchanged
  - — Block subsequent service - unchanged
  - — Prepaid calling card - new
  - — Call and tables timing diagram - unchanged
  - — Examples - unchanged
  - — Selecting services for operator floated and automated system calls - unchanged
- Sessions
  - — Standalone configuration - unchanged
  - — OSAC configuration - new
  - — Trigger event inform session - new
  - — OSAC session throttling - new
  - — OSAC error handling - new
- Transitions - unchanged
- Sanity timers - unchanged
- Simultaneous interactions (new)

OSSAIN 07 Enhancements (continued)

- Parallel datafill - new
  - — Between OSAC host and service node
  - — Between OSAC host and OSAC remote
  - — Between OSAC remote and service node
- Extension blocks - changed
- Protocol versions - new
- Upgrade from standalone to OSAC configuration - new
- Logs - changed
- OMs - changed

OSSAIN history

The following is a history of OSSAIN:

- TOPS06 - Initial Release with the standalone configuration only. Refer to functionality OSSAIN Initial Release, OSAN0101.
- TOPS07 - OSSAIN 07 Enhancements, OSAN0101, is released with the OSSAIN Centralization (OSAC) configuration. The changes from release TOPS06 and requirements are the following:
  - — Datafill
    - – See section “Upgrade from standalone to OSAC.
    - – New table OANODNAM is added to define node ids and names.
    - – Table OANODINV is changed to support OSN and OSAC nodes. Field NODEID is moved to new table OANODNAM and field ONODINFO is added. The number of OSNM nodes that can be datafilled is increased from 32 to 256. Prior node type OSNM has new subfields.
    - – Table EXNDINV is no longer used for OSSAIN. The OSSAIN information is moved into modified table OANODINV.
    - – Table OAFUNDEF is changed to allow host-remote session pools with new field HRSESNPL. Also, trigger event inform session pools are allowed with new field TRIGGER_AREA.
    - – Table OASESNPL is changed to allow host-remote session pools. New values OSACORIG and OSACTERM are added to field

ORIGTYPE. Also, trigger event inform session pools are allowed with new fields TRIGEVNT and TRIGGER_AREA.

- New table OSCVLGRP is added for host-remote voice links. This table is only used in the OSAC host.
- New parameter OSAC_NUM_RU is added to table OFCENG.
- Datafill in the OSAC remote is required since this is a new type of node.
- Parallel datafill between the host and remote is required.
- Table OATLKPRF is changed. Refinements STOPCNVT, GENAMA, and RLSFWD are added to field PROFILE. Refinement STOPCNVT is added to fields STAR and OCTO.
- Table CT4QNAMS is changed. When SYSAREA_SEL = TOPSOPR, refinement OAINPRE is added.
- Table OAINPRE is new.
- Table OAINPARM parameter NOTIFY_TIMER range is changed from 0-3600 to 0-32400.
- Table OAINPARM parameter ALT_BILL_HANDOFF_METHOD is added.
- Tables OASESNPL and OAFUNDEF are changed to allow a remote an immediate session to receive trigger event information from a service node prior to requesting the call control session.
- Table OAFNDISP, fields ORFLDISP and DEFLACTN are used for additional types of errors.
- Table OADTFPRF field DTMFIDX range is increased from 0-99 to 0-2046.
- Table TRKGRP, for TOPSVL trunk groups, field DIR is added.
- Table TOPSPOS, in an OSAC environment, position numbers must be distinct (not shared) across the network.

— Extension blocks - changed, OSAC_NUM_RU is new

— Logs

- AUD629 is new
- OSAC 200-203, 300, 600, and 601 are created for use only in an OSAC configuration.
- OAIN 207, 305, 616-623, 700, and 701 are new.

OSSAIN 07 Enhancements (continued)

  - EXT 106-108 are new.
  - TCCI 100 and 101 are used, 102 is new.

— OMs

  - OSACCP1, OSACCP2, OSACND, OSACSP, OSNND, OAPCALP6, OAINRTE, and OSNSP are created.
  - AABSHAND has new registers for tracking service node handoffs to AABS.
  - OAPCALP5 has new registers RESUME, RESUMES, RESUMEE, CONVTM, CONVTMS, and CONVTME.
  - In EXT, tuple OSAC_HOST_EXT_FC is added to the key type.
  - OAPNMTC, registers NDLOG and NDALARM are added.
  - OAPSPMTC, registers SPLOG, SPCH, SPALARM, and SPDRAIN are added.

— Limitations and restrictions (added OSAC and OSSAIN preprocessing sections)

— Interactions (new sections)

— Billing

  - OSAC calls are billed at the remote, not at the host.
  - SN handled calls can be marked as NO AMA.
  - Prepaid calling cards are stored in AMA module 052.
  - Each service node in a simultaneous interaction call has AMA module 184 attached.

- TOPS08 - The following tables are changed:

— OATPRFIX: For fields CPROFIDX, TPROFIDX, and DPROFIDX the range of subfield PROFIDX is expanded to 0-2046.

— OACNNPRF: Tthe ranges of fields DTMFIDX and CAUSEIDX are expanded to 0-2046.

— OACAUPRF: Tthe range of field IDX is expanded to 0-2046.

— OATLKPRF: Tthe range of field TALKIDX is expanded to 0-2046.

— OADSCPRF: Tthe ranges of fields DISCIDX and DTMFIDX are expanded to 0-2046.

Optionality

This functionality is optional, controlled by Software Optionality Control (SOC). The SOC optionality provides two possible states: IDLE and ON. This

functionality is delivered in the IDLE state and must be set to ON for operation.

When the functionality is set to IDLE, all new data fields and tables are present and may be datafilled, but calls can not be routed to an OSSAIN service node. Calls attempting to route to a call type for queue (CT4Q) with the table CT4QNAMS field SYSAREA set to OSSAIN receive Reorder treatment. In addition, OSSAIN trigger processing from the operator and Traffic Operator Position System (TOPS) switch automated systems are ignored when the OSSAIN SOC option is set to IDLE.

Functionality OSSAIN Initial Release, OSAN0101, must be set to ON for this functionality to operate.

For information on using SOC, please refer to the *Software Optionality Control User's Manual*, 297-8991-901.

Defining OSSAIN nodes (changed)

In TOPS07, table EXNDINV is removed and table OANODNAM is added.

In an OSSAIN network, switches and service nodes are called OSSAIN nodes. OSSAIN nodes are defined in tables OANODNAM, OANODINV, ENTYPES, and ENSITES.

OSSAIN utilizes the ethernet interface unit (EIU) to interface internet protocol (IP) traffic to the ethernet. Therefore, the existing IP related tables (LIUINV, IPNETWRK, IPROUTER, and IPTHRON) must be datafilled for the EIU associated with each switch (host or remote) to route IP messages.

Table IPNETWRK, field PARMAREA, allows screening from the Ethernet to prevent being bombarded with messages. Refer to the datafill procedure section for more details.

Descriptions of these tables and sample datafill are provided in the datafill procedure section. The following figure shows the table flow:

OSSAIN 07 Enhancements (continued)

Datafill tables for defining OSSAIN nodes

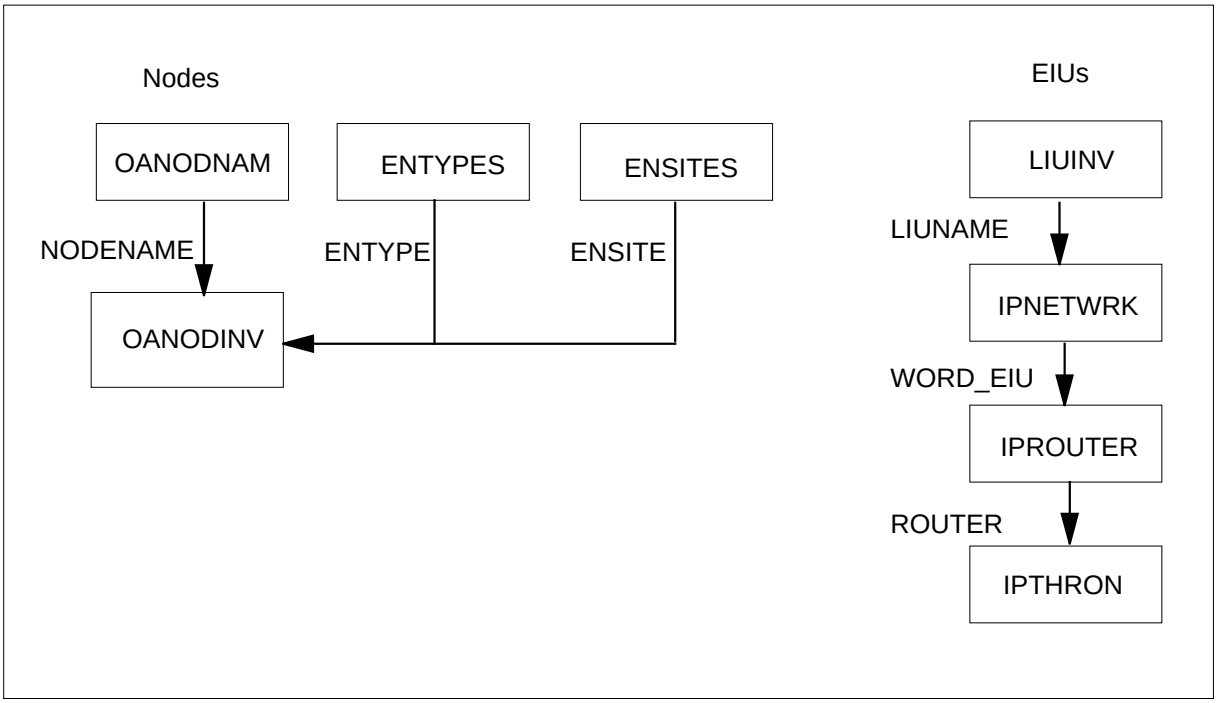

OSSAIN nodes can be configured as either standalone or OSSAIN centralized (OSAC), which are described in the following sections.

Standalone configuration (changed from OSSAIN, ENSV0014)

For release TOPS07, node information is moved from table EXNDINV to tables OANODNAM and OANODINV. Therefore, table EXNDINV is no longer used, table OANODNAM is new, and table OANODINV is modified. Also, table OANODINV is changed to support OSN and OSAC nodes.

In a standalone configuration, service node(s) provide services to a standalone switch. The switch performs automatic call distribution (ACD), voice connections, and maintenance for each service node. The switch does not need to communicate with other switches regarding the service nodes. Each service node communicates with the switch for call processing.

The following is an example standalone configuration where service nodes 1 and 2 provide services to a host switch:

Complete standalone configuration example

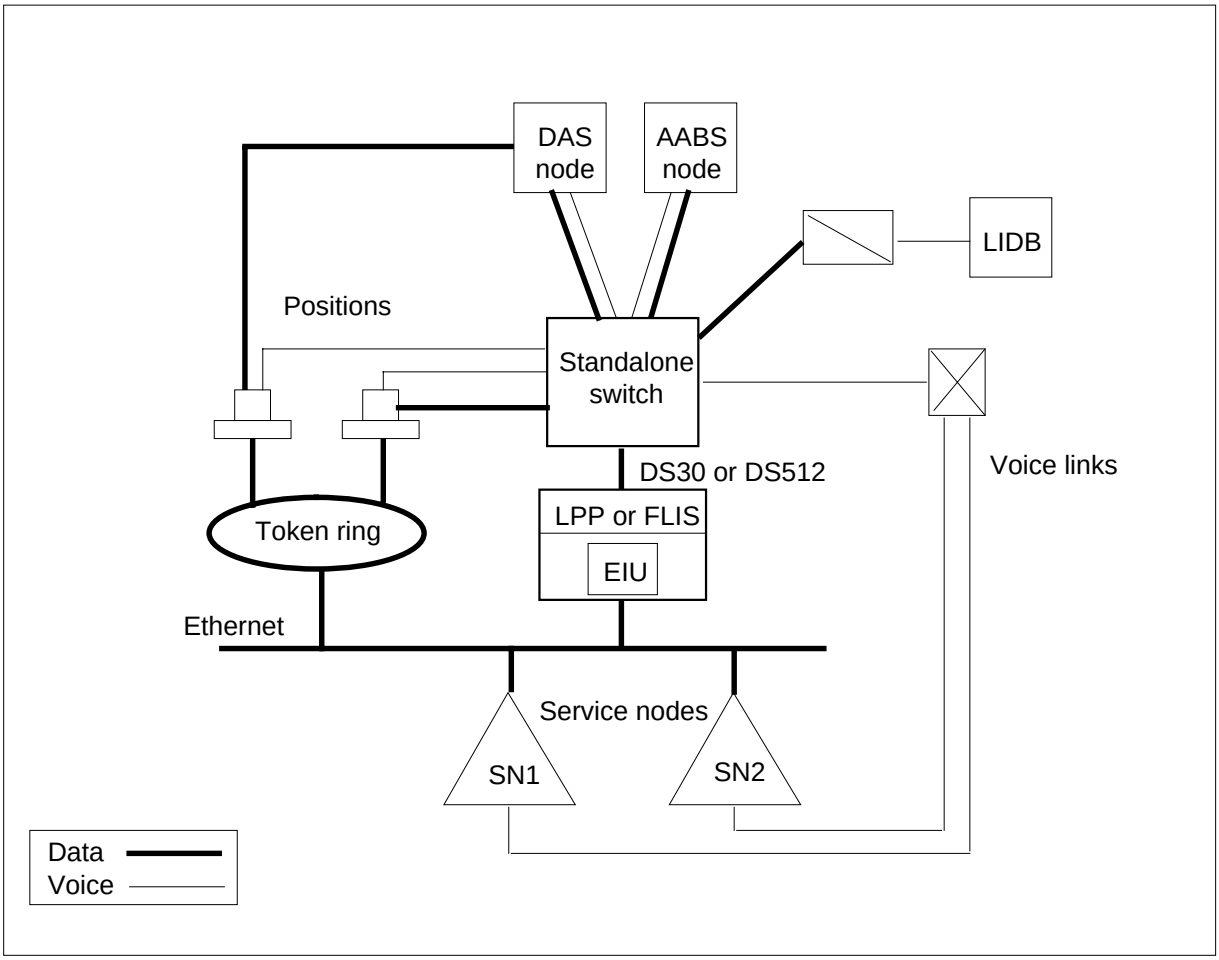

In the above figure, service nodes are connected to the switch by an ethernet local area network (LAN). The service nodes are networked together by the LAN and the host switch is interfaced to the LAN by an ethernet interface unit (EIU).

All service node voice links are connected to the switch.

The following is a simplified version of the standalone configuration:

OSSAIN 07 Enhancements (continued)

Simplified standalone configuration example

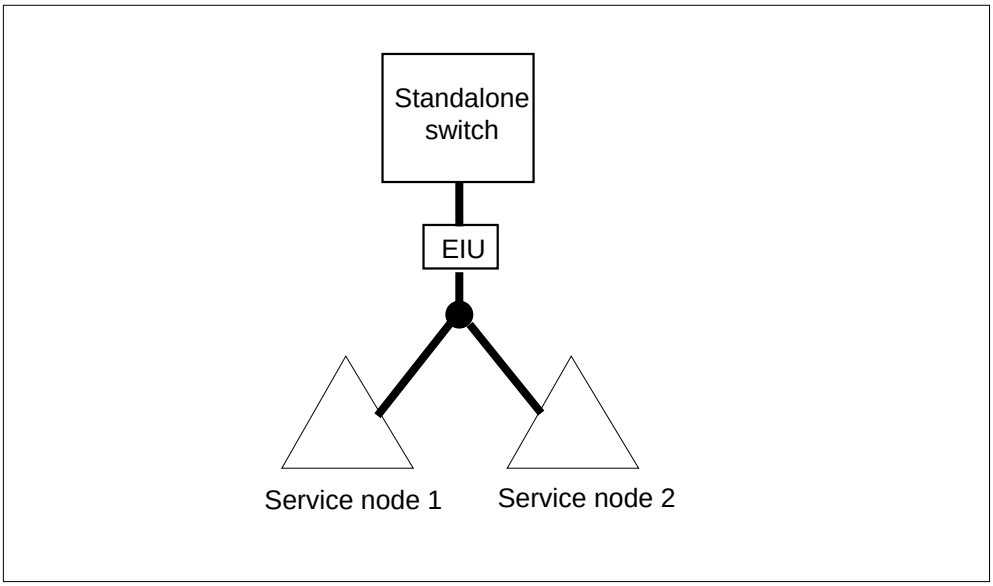

For the above network, tables OANODNAM and OANODINV in the standalone switch are datafilled as follows:

MAP display example for table OANODNAM

```
NODEID     NODENAME
-----------------------------------------------------------
0          SN_01
1          SN_02
```

MAP display example for table OANODINV

```
NODENAME  NODEAREA
-------------------------------------------------------------------------
SN_01     OSNM 0 UDP IPV4  47 245 1 34  7001 Y 2 20 240 60 SN
                                              4 BB 3  RTP_1  YELLOW_PG
SN_02     OSNM 1 UDP IPV4  47 245 1 35  9001 Y 2 20 240 60 SN
                                              4 BB 4  RTP_2  BILLING
```

The above example shows that a tuple is datafilled for each service node. Each service node tuple contains the IP and port addresses. The port addresses are then associated with applications in table OASESNPL (discussed later in this document).

OSSAIN 07 Enhancements (continued)

OSAC configuration (new)

TOPS operator centralization (OC) allows the operator work force to be centralized. However, most existing automated operator systems such as automated alternate billing service (AABS) and directory assistance (DA) require the associated node, voice service node (VSN) and directory assistance service (DAS) to be connected directly to the switch with the software for these services. OSAC allows service node resources to be provided to OSAC remote switches as well as the OSAC host switch. OSSAIN service nodes are centralized independently of how TOPS operators are centralized. Centralization allows better use of these resources. For example, OSAC can be used to trial new services or provide less active (lower revenue generating) services.

In a centralized configuration, call distribution, voice connections, and maintenance for the service nodes are centralized at the OSAC host. Service node sessions (operator services) and voice links at the OSAC host are shared among OSAC remote switches. The service node may be communicating with more than one switch for call processing. However, the service node only communicates with the OSAC host switch for maintenance.

When a call comes into a remote requiring a function provided by a service node, the remote queries the OSAC host for a session to the service node. After a service node session is obtained, the remote begins the call with the service node.

Note, the use of OSAC host and OSAC remote switches in an OSSAIN centralized network should not be confused with host and remote switches in a TOPS OC network. The OSAC switches do not provide the same functionality as their TOPS OC counter parts.

The following is an example of a centralized configuration where service nodes 1 and 2 provide services to a OSAC host and two OSAC remotes:

OSSAIN 07 Enhancements (continued)

Complete centralized configuration example

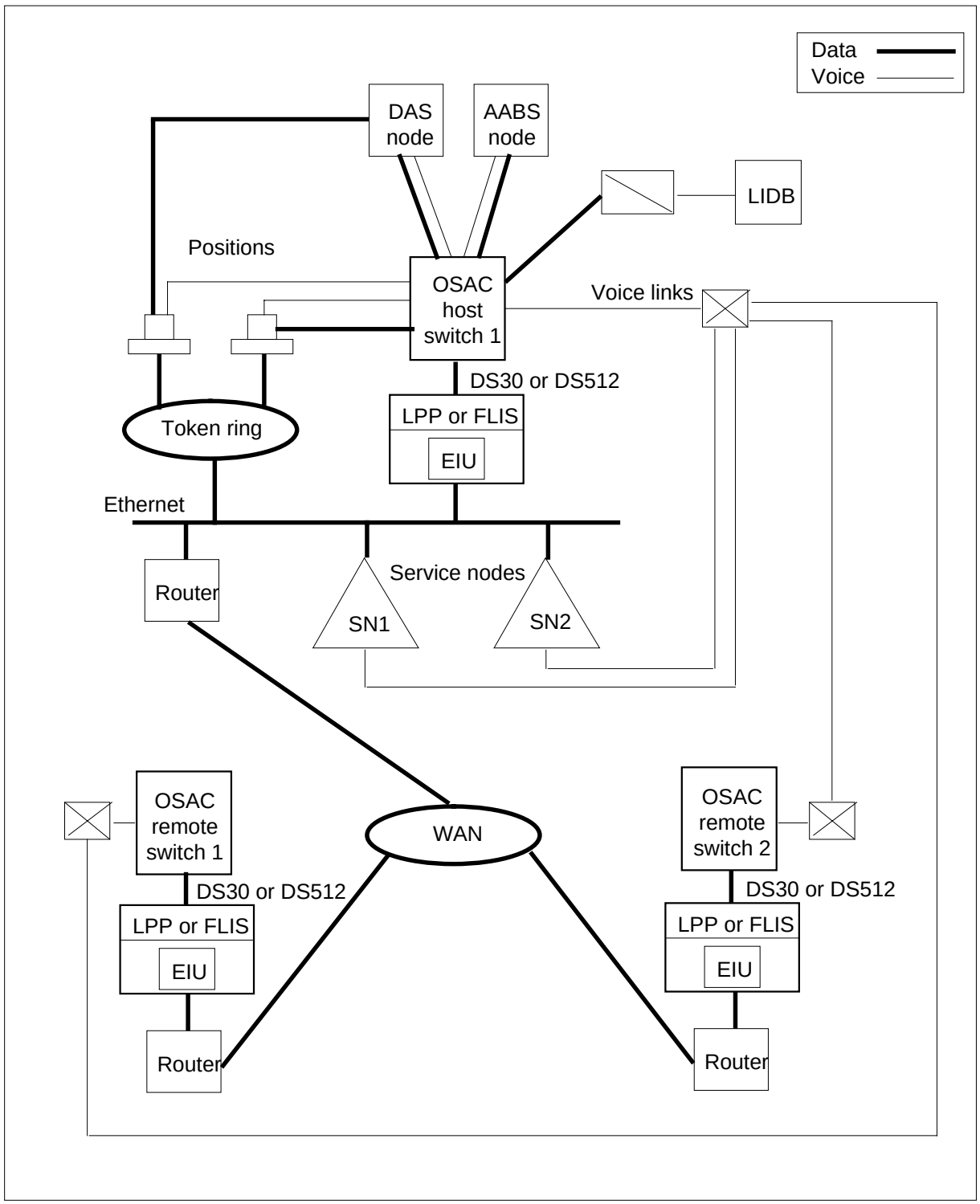

In the above figure, service nodes are centralized off an OSAC host by using an ethernet local area network (LAN). The service nodes are networked together by the LAN and the OSAC host switch is interfaced to the LAN by an ethernet Interface Unit (EIU). Routers are added to the configuration to provide access to a wide area network (WAN). Each OSAC remote switch is interfaced to the WAN by an EIU and router hardware.

All centralized service node voice links are connected to the OSAC host switch. OSAC remote switches also have voice links to the OSAC host. When a voice connection between an OSAC remote switch and centralized service node is required, the OSAC host coordinates the interconnection of the service node to the OSAC host voice link and the OSAC host to the OSAC remote voice link.

The following is a simplified version of the centralized configuration:

Simplified centralized configuration example

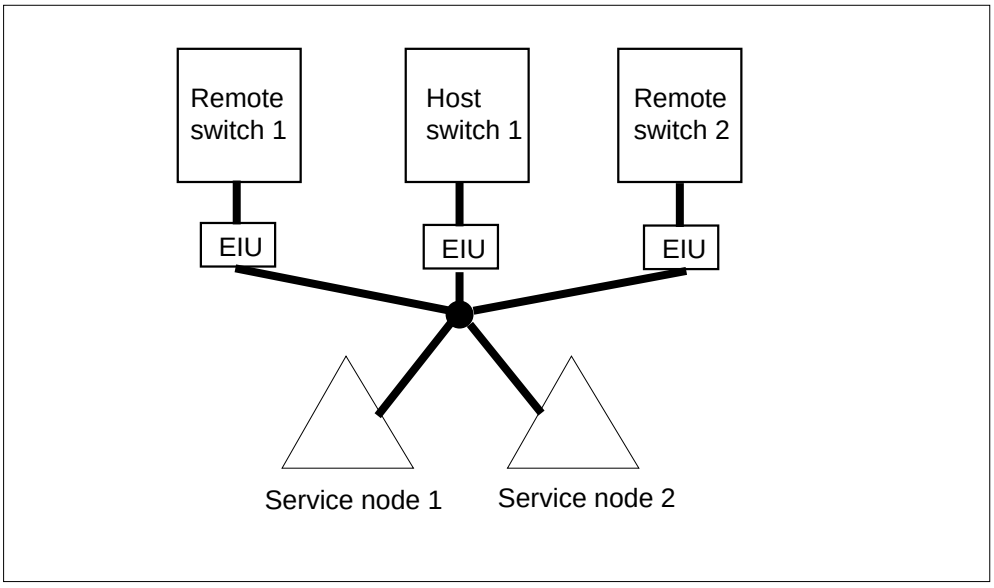

Table OANODINV identifies a node as either a switch or service node. Datafill indicates which service nodes are maintained by the OSAC host switch. OSAC remote switches do not maintain service nodes.

The following is sample datafill in the host for the above network:

OSSAIN 07 Enhancements (continued)

MAP display example for table OANODNAM in OSAC host switch 1

```
NODEID     NODENAME
-------------------------------------------------------
0          HOST1
1          REMOTE1
2          REMOTE2
3          SN_01
4          SN_02
```

MAP display example for table OANODINV in OSAC host switch 1

```
NODENAME NODEAREA
-------------------------------------------------------------------------
HOST1    OSAC SELF
REMOTE1  OSAC OTHER 1 UDP IPV4  47 187 01 01  SWITCH
                                        2 B 11 DURHAM_1  YELLOW_PG
REMOTE2  OSAC OTHER 2 UDP IPV4  52 192 01 01  SWITCH
                                    23 HH 01  DURHAM_2  BILLING
SN_01    OSNM 0 UDP IPV4  47 245 1 34  7001 Y 2 20 240 60 SN
                                       4 BB 3  RTP_1  AABS1
SN_02    OSNM 1 UDP IPV4  47 245 1 35  9001 Y 2 20 240 60 SN
                                       4 BB 4  RTP_2  AABS2
```

In the above datafill, a tuple is datafilled for each service node and remote switch since the host communicates with all of them. And since the host maintains the service nodes, their relationship to the OSAC host is OSNM for the ONPMTYPE.

The following datafill examples are for the remotes switches:

MAP display example for table OANODNAM in OSAC remote switch 1

```
NODEID     NODENAME
-------------------------------------------------------
0          HOST1
1          REMOTE1
3          SN_01
4          SN_02
```

OSSAIN 07 Enhancements (continued)

MAP display example for table OANODINV in OSAC remote switch 1

```
NODENAME NODEAREA
-------------------------------------------------------------------
HOST1    OSAC OTHER 0 UDP IPV4  38 171 01 01  SWITCH
                                        4 CC 8 RALEIGH1  HOST
REMOTE1  OSAC  SELF
SN_01    OSN 0 UDP IPV4  47 245 1 34  HOST1 Y 2 20 240 60 SN
                                           4 BB 3  RTP_1  AABS1
SN_02    OSN 1 UDP IPV4  47 245 1 35  HOST1 Y 2 20 240 60 SN
                                           4 BB 4  RTP_2  AABS2
```

MAP display example for table OANODNAM in OSAC remote switch 2

```
NODEID     NODENAME
-----------------------------------------------------
0          HOST1
2          REMOTE2
3          SN_01
4          SN_02
```

MAP display example for table OANODINV in OSAC remote switch 2

```
NODENAME NODEAREA
-------------------------------------------------------------------
HOST1    OSAC OTHER 0 UDP IPV4  38 171 01 01  SWITCH
                                        4 CC 8 RALEIGH1  HOST
REMOTE2  OSAC  SELF
SN_01    OSN 0 UDP IPV4  47 245 1 34  HOST1 Y 2 20 240 60 SN
                                           4 BB 3  RTP_1 AABS1
SN_02    OSN 1 UDP IPV4  47 245 1 35  HOST1 Y 2 20 240 60 SN
                                           4 BB 4  RTP_2 AABS2
```

In the above datafill examples for the OSAC remote switches, a tuple is datafilled for each service node, host, and the OSAC remote itself. A tuple is not datafilled for the other OSAC remote since the OSAC remotes do not communicate with each other. Also, since OSAC remotes do not maintain service nodes, the ONPMTYPE is set to OSN. This is the relationship of the service nodes to each OSAC remote.

Note that in table OANODNAM, the NODEID values must correlate between the switches. For example, service nodes SN_01 and SN_02 are values 3 and 4 in the host and both remotes.

OSSAIN 07 Enhancements (continued)

Two switches acting as host, remote, or standalone (new)

From a call type perspective, a switch can play multiple roles in a centralized environment. A switch may act as a standalone for one call interaction, an OSAC remote for another, and as an OSAC host for a third. This is controlled by session pool definitions in table OASESNPL. Refer to section “Sessions" for further information.

The following figure shows two switches, each provisioned with two service nodes. These switches are interconnected so that they may use the services of the other switch's service nodes.

Example of two switches acting as host, remote, or standalone

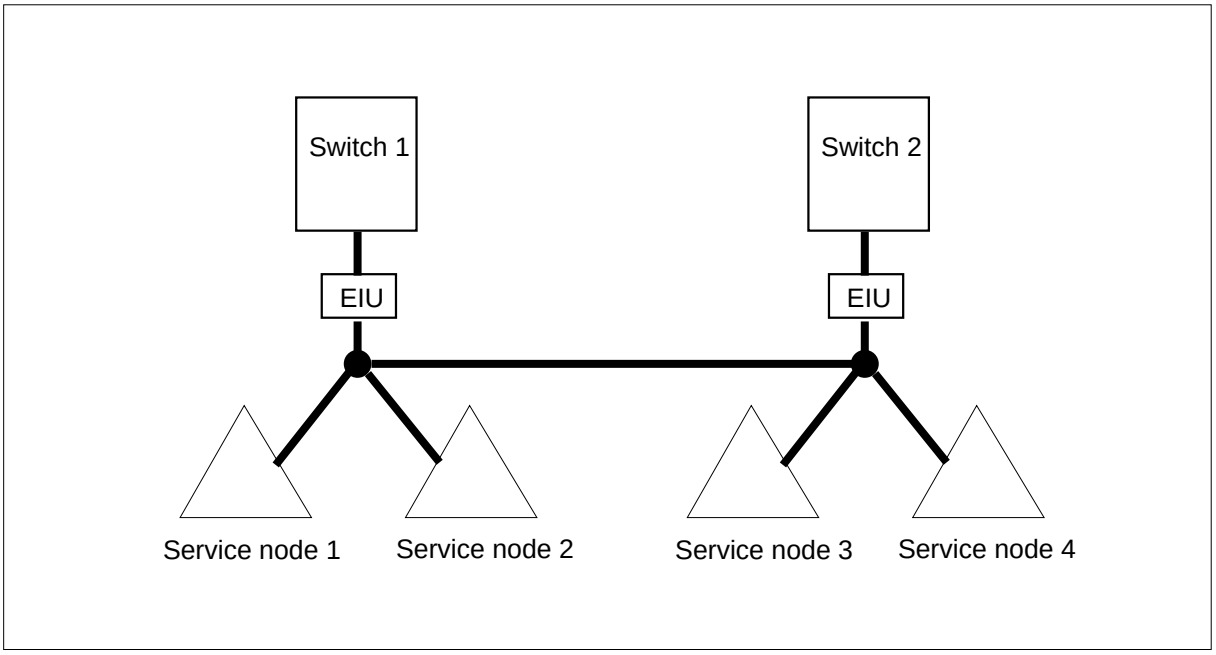

In the above configuration, either switch may act as a standalone switch (the switch is using the services of its own service nodes), as an OSAC host switch (the other switch is using the services of service nodes provisioned off this switch), or as an OSAC remote switch (the switch is using the services of a service node provisioned off the other switch).

The following is sample datafill for switch 1 for the above network.

MAP display example for table OANODNAM in switch 1

```
NODEID     NODENAME
-------------------------------------------------------
0          SWITCH1
1          SWITCH2
2          SN_01
3          SN_02
4          SN_03
5          SN_04
```

MAP display example for table OANODINV in switch 1

```
NODENAME NODEAREA
-------------------------------------------------------------------------
SWITCH1  OSAC SELF
SWITCH2  OSAC OTHER 1 UDP IPV4  47 187 01 01  SWITCH
                                          2 B 11 RALEIGH2  SW_2
SN_01    OSNM 0 UDP IPV4  47 245 1 34  7001 Y 2 20 240 60 SN
                                           4 BB 3  RTP_1 DIRECTORY_1
SN_02    OSNM 1 UDP IPV4  47 245 1 35  9001 Y 2 20 240 60 SN
                                           4 BB 4  RTP_2 BILLING_1
SN_03    OSN 0 UDP IPV4  47 192 1 34  SWITCH2 Y 2 20 SN
                                          2 A 6  RTP_3 DIRECTORY_2
SN_04    OSN 1 UDP IPV4  47 192 1 35  SWITCH2 Y 2 20 2SN
                                           2 A 7  RTP_4 BILLING_2
```

In the above datafill, a tuple is entered for all of the nodes that switch 1 is in communication and itself. Service nodes 1 and 2 are OSNM since they are maintained by switch 1. Service nodes 3 and 4 are OSN since they are not maintained by switch 1, but by switch 2.

The following is datafill in switch 2:

MAP display example for table OANODNAM in switch 2

```
NODEID     NODENAME
-------------------------------------------------------
0          SWITCH1
1          SWITCH2
2          SN_01
3          SN_02
4          SN_03
5          SN_04
```

OSSAIN 07 Enhancements (continued)

MAP display example for table OANODINV in switch 2

```
NODENAME NODEAREA
-------------------------------------------------------------------
SWITCH1  OSAC OTHER 0 UDP IPV4  47 131 01 01  SWITCH
                                        1 BG 5 RALEIGH1 SW_1
SWITCH2  OSAC SELF
SN_01    OSN 0 UDP IPV4  47 245 1 34  SWITCH1 Y 2 20 SN
                                          4 BB 3  RTP_1  DIRECTORY_1
SN_02    OSN 1 UDP IPV4  47 245 1 35  SWITCH1 Y 2 20 SN
                                          4 BB 4  RTP_2  BILLING_1
SN_03    OSNM 0 UDP IPV4  47 192 1 34  70001 Y 2 20 240 60 SN
                                          2 A 6  RTP_3  DIRECTORY_2
SN_04    OSNM 1 UDP IPV4  47 192 1 35  90001 Y 2 20 240 60 SN
                                          2 A 7  RTP_4  BILLING_2
```

In the above datafill, a tuple is entered for all of the nodes that switch 2 is in communication and the switch itself. Service nodes 3 and 4 are OSNM since they are maintained by switch 2. Service nodes 1 and 2 are OSN since they are not maintained by switch 2, but by switch 1.

Simultaneous interactions (new)

Two adjunct nodes (either two service nodes or a service node and an operator) can be attached to a call simultaneously. No extra datafill is required for this capability. This situation is valid in either a standalone or OSAC configuration. The following is an example of two service nodes in a simultaneous interaction.

Simultaneous interaction example

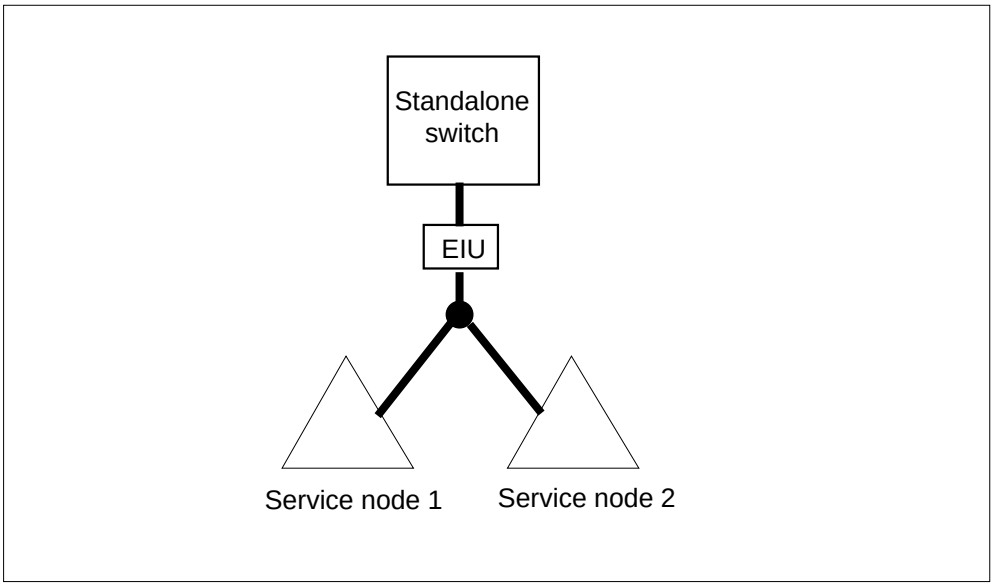

Defining voice links

Standalone configuration (unchanged from OSSAIN, ENSV0014)

Dedicated trunk groups must be defined for voice channels between the standalone switch and service nodes. Voice channels to one or more service nodes can be combined in the same trunk group. The dedicated voice trunks must be trunk group type TOPSVL, datafilled in tables CLLI, TRKGRP, TRKSGRP, and TRKMEM.

Then, table OAVLMAP maps the logical channel numbers received from the service nodes to the actual circuits in table TRKMEM. The nodename from tables OANODINV is used to index table OAVLMAP.

Datafill for the logical voice channels must match between the standalone switch and service nodes.

Details of these tables are given in the datafill procedure section. Table flow is given in the following figure:

OSSAIN 07 Enhancements (continued)

Host datafill tables for voice links between the host and service nodes

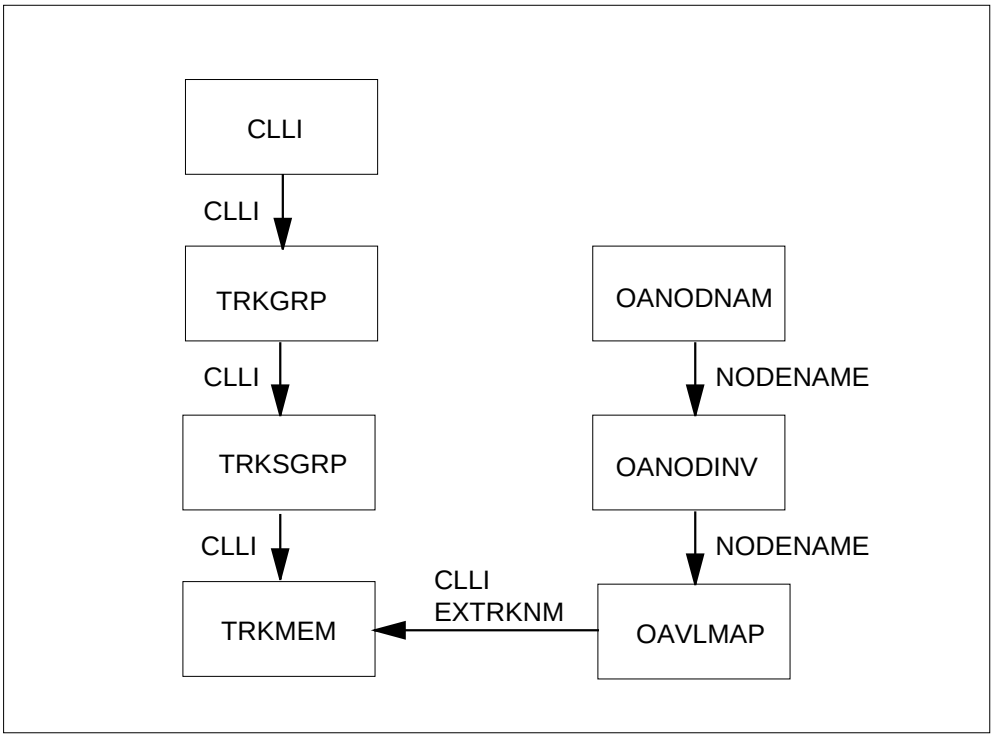

OSAC configuration (new)

Dedicated trunk groups must be defined for voice channels between the host switch and service nodes as described in the previous section, “Standalone configuration". Also, dedicated trunk groups must be defined for voice channels between the OSAC host and OSAC remotes. The dedicated voice trunks must be trunk group type TOPSVL, datafilled in tables CLLI, TRKGRP, TRKSGRP, and TRKMEM. These tables are datafilled in the host and remotes. The datafill must match between the OSAC host and OSAC remote. In table TRKGRP for the direction, enter outgoing for the host and incoming for the remote.

Table OAVLMAP maps the logical channel numbers received from the responding switch (host or remote) to the actual circuits in table TRKMEM. The nodename from table OANODINV is used to index table OAVLMAP. These tables are datafilled in the host and remotes.

New table OSCVLGRP, used only in the host, identifies the voice link groups that connect to the remotes. The most idle selection sequence is used for selecting a voice link member from the group.

OSSAIN 07 Enhancements (continued)

In each remote, allocate a conference three port (CF3P) for each remote-host voice link. Therefore, if a remote is centralized with two hosts, the remote has two CF3Ps. The CF3Ps are defined in table CONF3PR. No CF3Ps are required in the host.

If converting from a standalone to an OSAC configuration, add voice links between the host and each remote. Additional links may be required between the host and service nodes to handle additional call volume. Also, add CF3Ps in the remote.

Details of these tables are given in the datafill procedure section. The following figures show the table flow for voice links in the OSAC host and OSAC remote:

OSAC host datafill tables for voice links

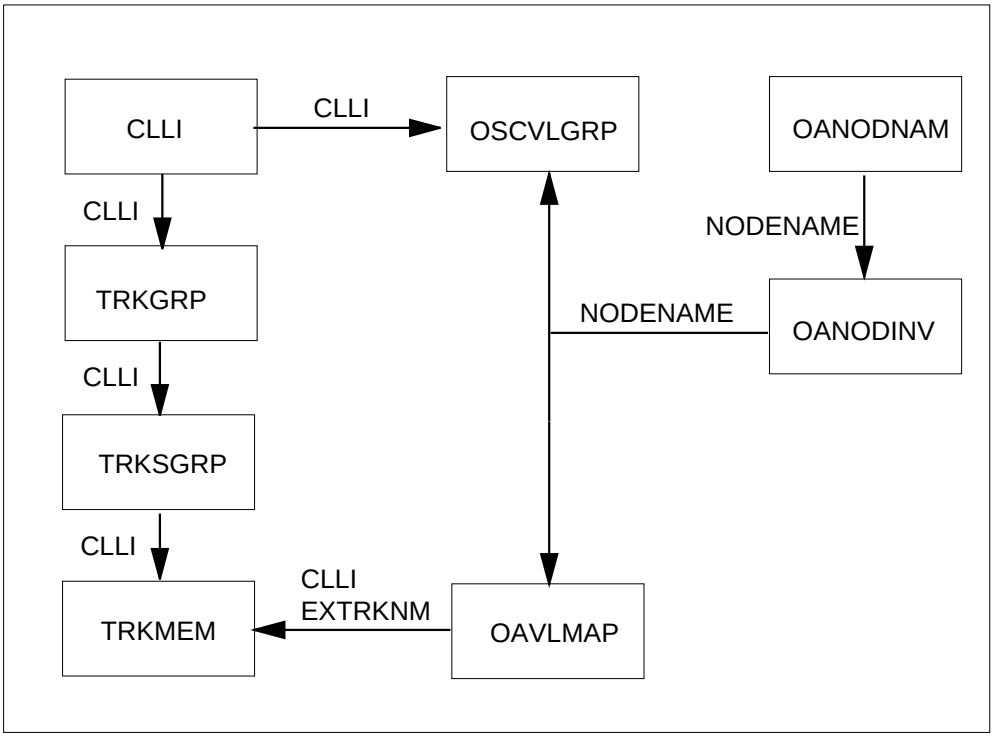

The above tables define a voice link from the host to each remote and from the host to each service node. No three-port conference circuits are required in the OSAC host.

The following figure shows the table flow for defining the voice link between the remote and the host.

OSSAIN 07 Enhancements (continued)

OSAC remote datafill tables for a voice link between the remote and host

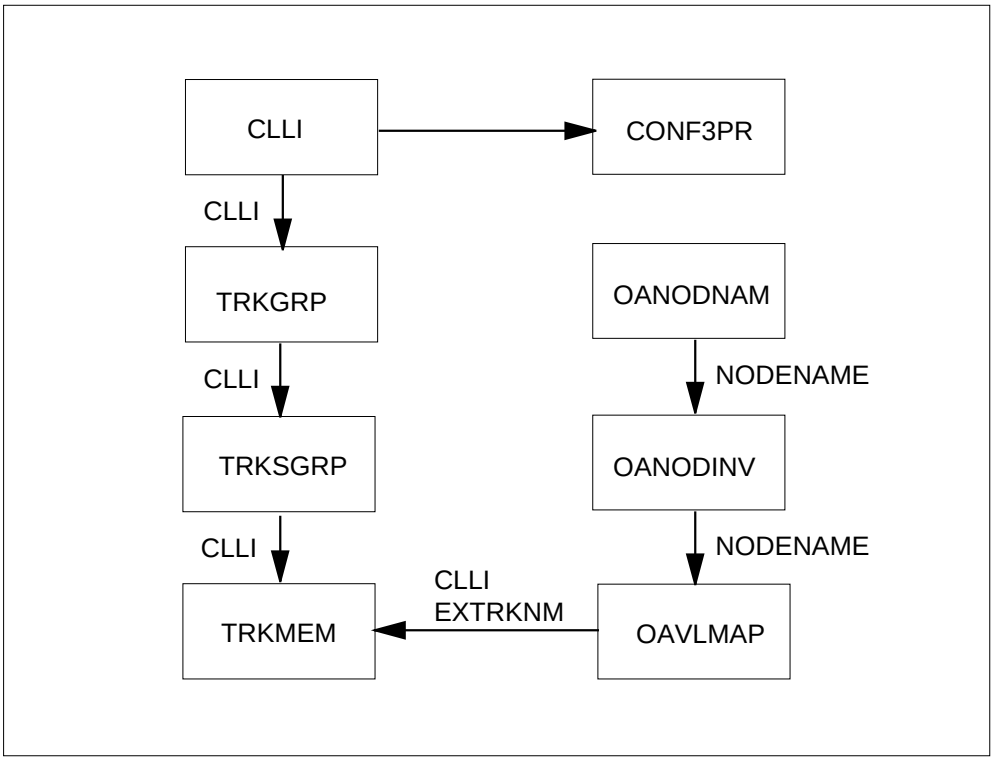

Table CONF3PR requires prior datafill of tables CLLI, DATASIZE, PADDATA, TMINV, and OFCENG (parameter PM_PCM_PROTOCOL_SELECTION). After table CONF3PR, datafill table CLLIMTCE.

OSAC engineering hardware

The use of OSAC requires engineering of the following hardware:

- The provisioning of voice links between OSAC remote switches and OSAC host switches. Additional voice links may be required between the OSAC host and centralized service node to handle increased call volume.
- Three port conference circuits are required in OSAC remote switches in order to make network connections between the originating and terminating parties and centralized service nodes. No CF3P's are needed at the OSAC host for OSAC.

- Router hardware and long distance network connections (that is, T1 links) are required to inter-work OSAC remote switches with OSAC host switches and centralized service nodes.
- The provisioning of the number of OSAC RUs in the OSAC host. Sufficient numbers of OSAC RUs should be allocated to process all OSAC calls at the Host.

Selecting functions (services) (changed from OSSAIN, ENSV0014)

This section provides guidelines in selecting services. This section is changed from functionality OSSAIN, ENSV0014, by the addition of subsections “OSSAIN preprocessing" and “Prepaid calling card".

Overview (unchanged from OSSAIN, ENSV0014)

When a call is received, datafill selects the types of services. Note, OSSAIN uses the word `function' for a service. The following figures show the call and table flow:

OSSAIN 07 Enhancements (continued)

Call flow for selecting services (initial)

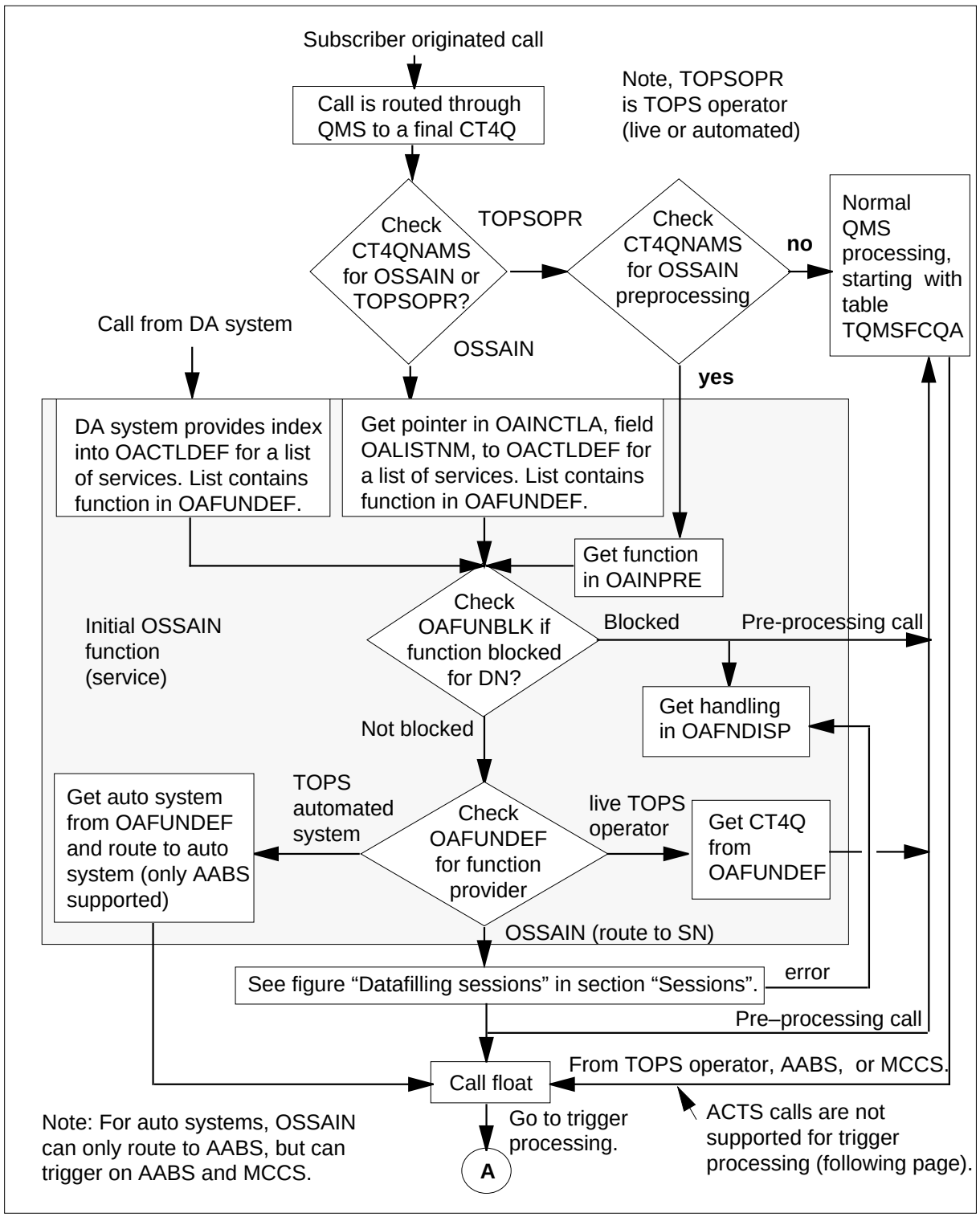

OSSAIN 07 Enhancements (continued)

Call flow for selecting services (continued) (subsequent)

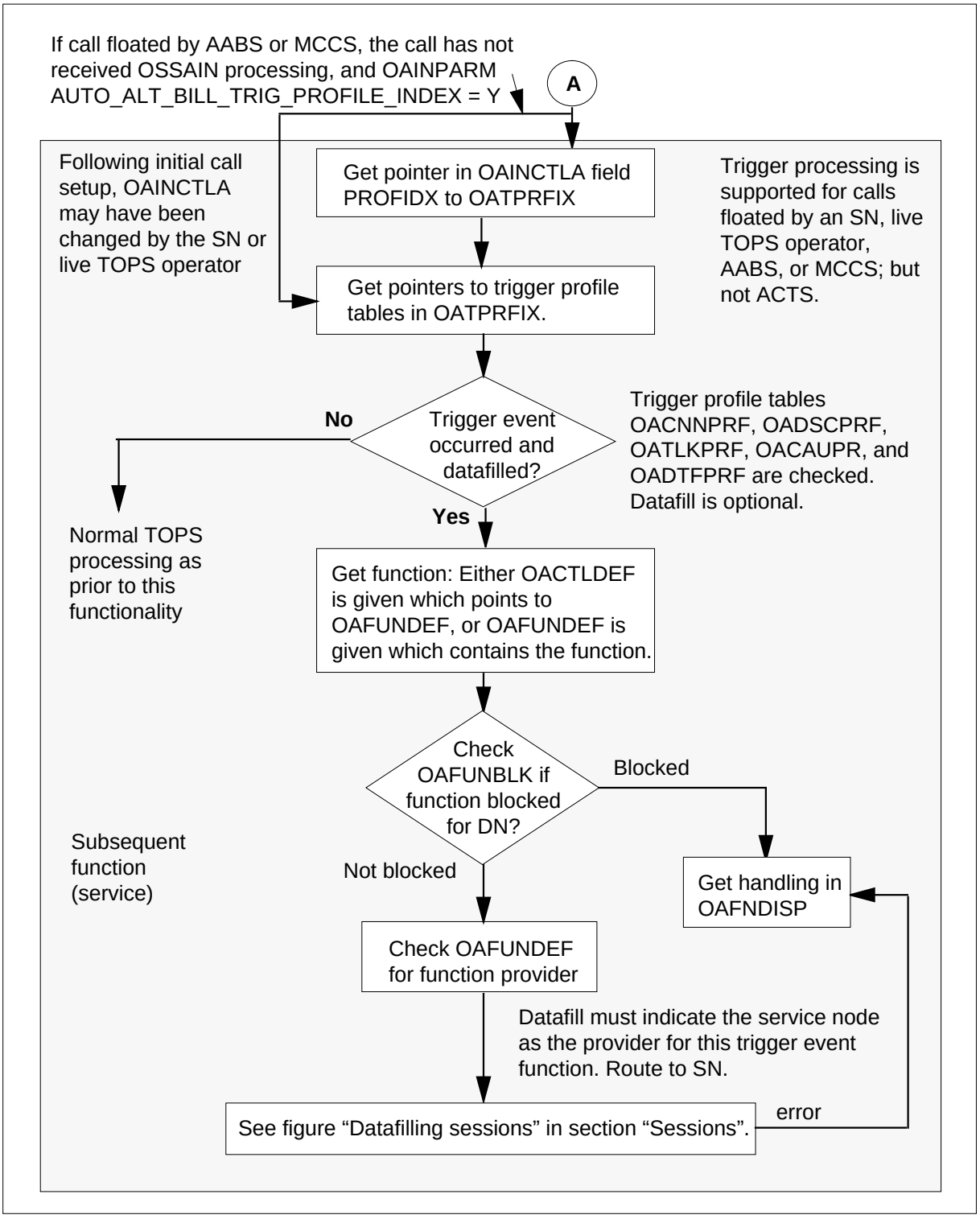

OSSAIN 07 Enhancements (continued)

Table data flow for selecting an initial service during initial call set-up

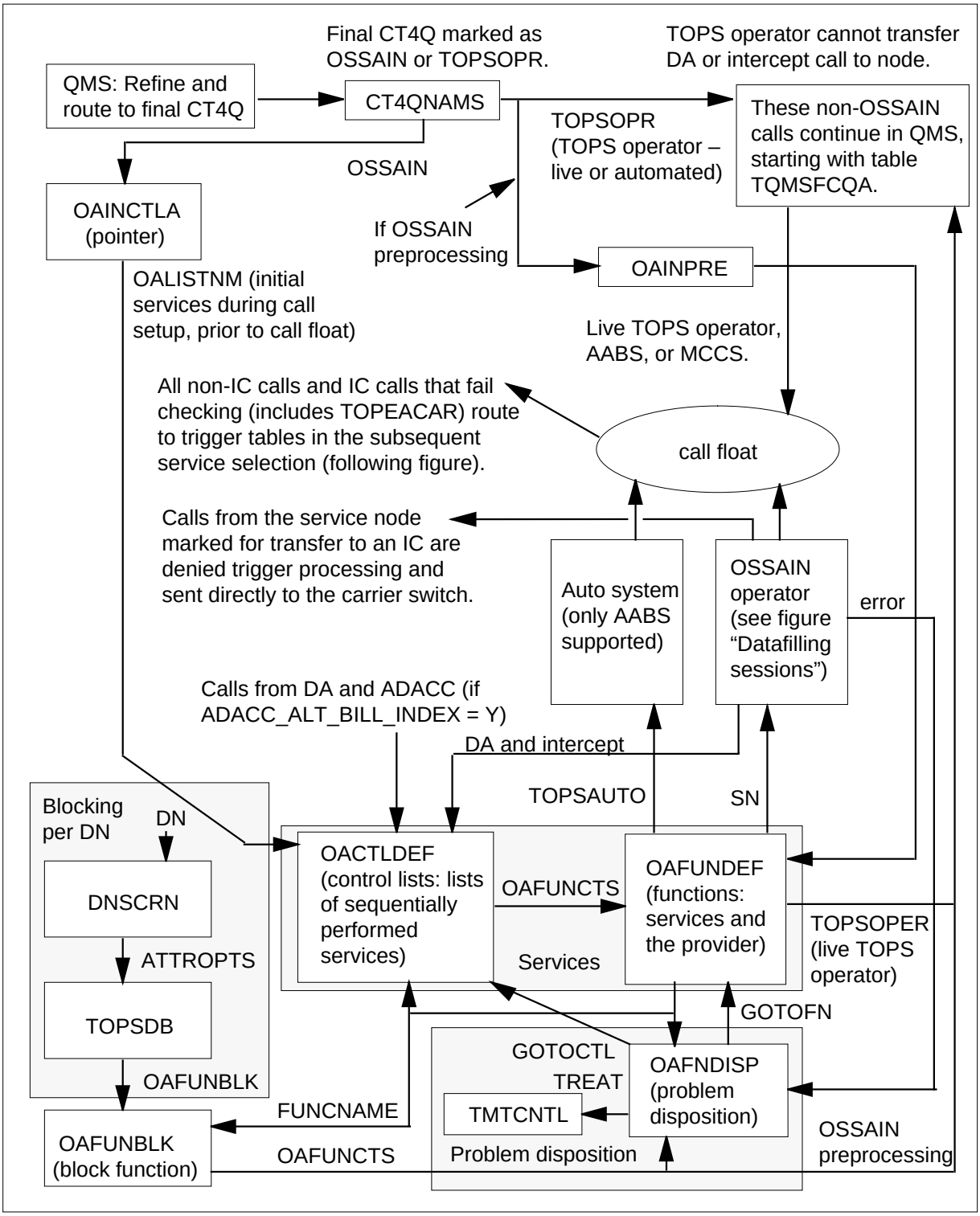

OSSAIN 07 Enhancements (continued)

Table data flow for selecting subsequent service(s) during call float - optional

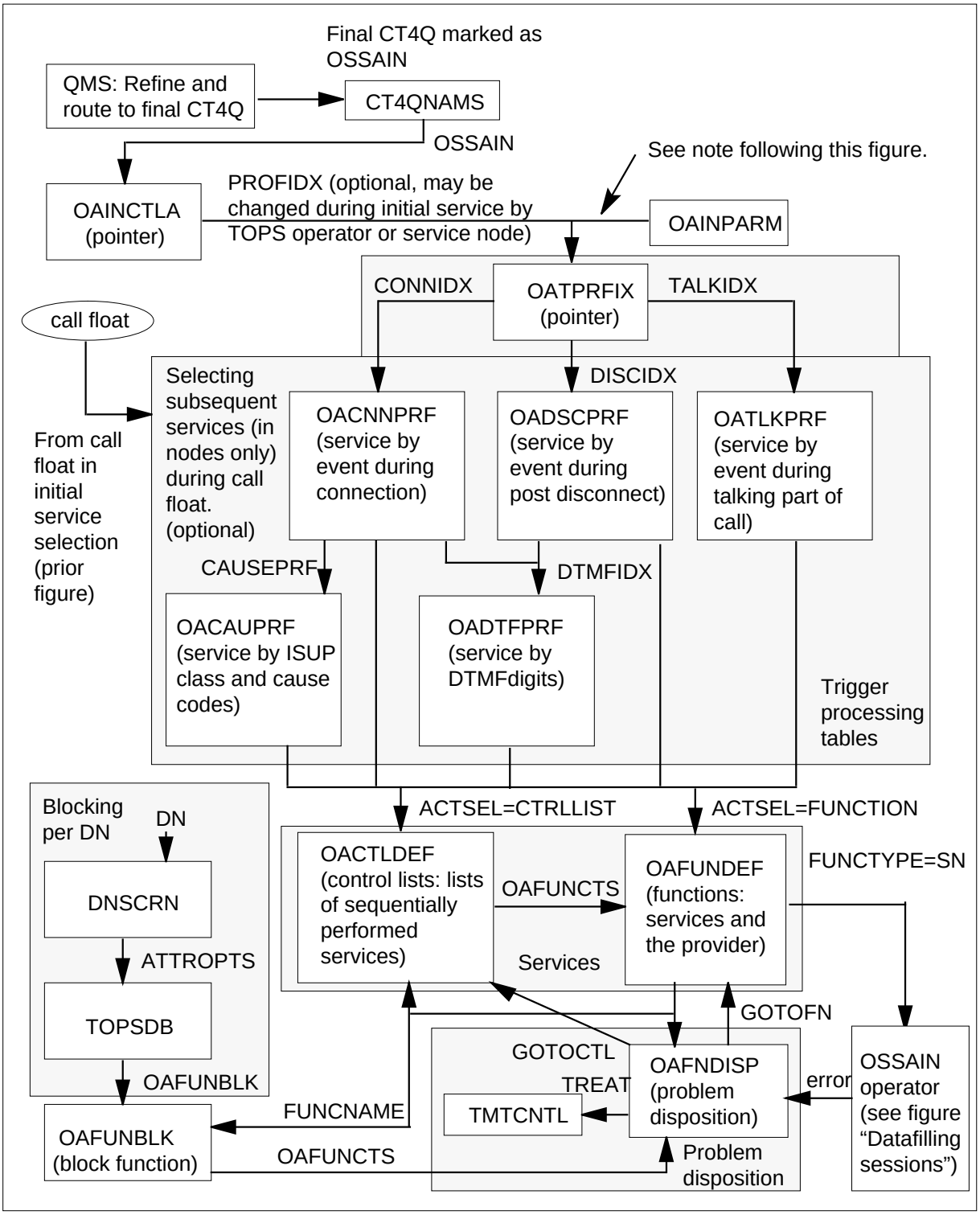

OSSAIN 07 Enhancements (continued)

Note: Table OAINCTLA provides an index into table OATPRFIX. This index can be changed if either of the following conditions occurs:

- the call is floated by AABS or MCCS, the call has not received OSSAIN processing (the call is marked in table CT4QNAMS as TOPSOPR), and table OAINPARM parameter AUTO_ALT_BILL_TRIG_PROFILE_INDEX = Y
- the call is floated by an operator, the call has not received OSSAIN processing (the call is marked in table CT4QNAMS as TOPSOPR), and table OAINPARM parameter OPR_TRIGGER_PROFILE_INDEX = Y

The tables in the above figures are described in detail in the datafill procedure section.

In the above figures, only calls routed to the queue management system (QMS) are eligible for OSSAIN. In QMS, calls receive normal processing when routing through the refinement tables to a final CT4Q. Then, a new field in table CT4QNAMS marks the final CT4Qs for OSSAIN processing by a service node (field SYSTEM = OSSAIN) or processing by the switch as prior to this functionality (field SYSTEM = TOPSOPR).

Note, new dedicated refinement and final CT4Qs for OSSAIN must be datafilled. These refinement tables are ordered under field PREOPR in tables TQORDERA and TQORDERB. Refer to the Host QMS functionality, ADVQ0003, for further details on datafilling QMS. The following figure shows the QMS tables to be datafilled for OSSAIN:

OSSAIN 07 Enhancements (continued)

QMS tables for OSSAIN

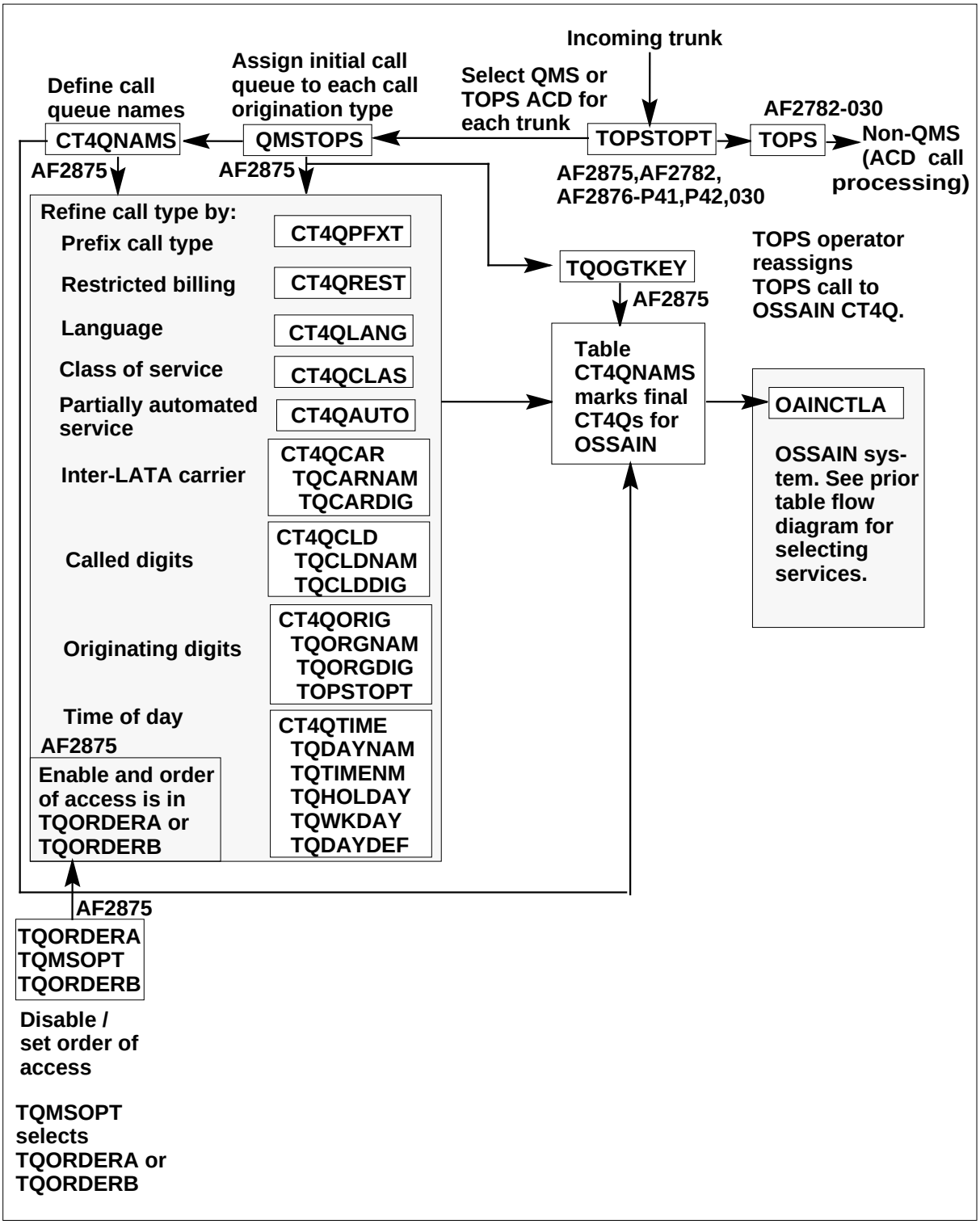

OSSAIN 07 Enhancements (continued)

QMS tables for OSSAIN (continued)

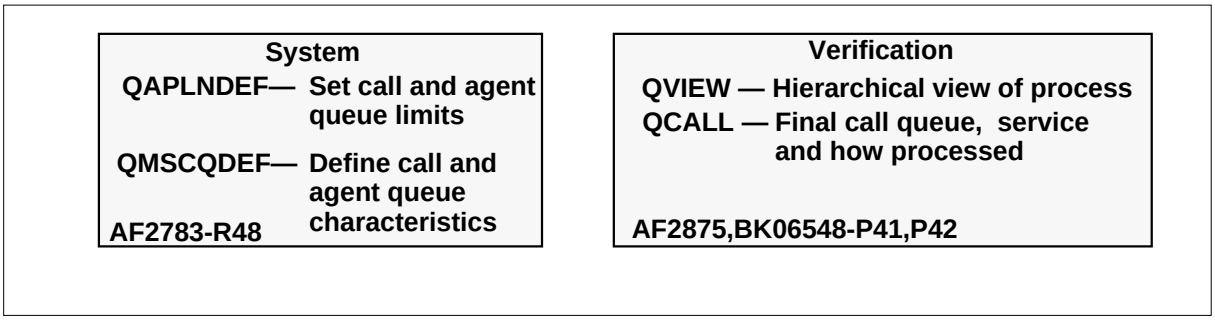

The prior figures are discussed in the following subsections.

Select OSSAIN (unchanged from OSSAIN, ENSV0014)

After a call is routed by QMS to a final CT4Q according to active table TQORDERA or TQORDERB, the call is directed to either a TOPS operator (live or automated) or a service node. This is determined in CT4QNAMS by new field SYSAREA with values OSSAIN (service node) and TOPSOPR (TOPS operator). A TOPS operator is either live or automated (that is, AABS, ACTS, or MCCS). When set to TOPSOPR, the call is processed as prior to this functionality. When set to OSSAIN, the call is directed to the service selected by the new OSSAIN tables discussed in the following subsections.

Call types: OSSAIN supports a limited number of call origination types. QMS table QMSTOPS assigns an initial call queue according to the call origination type. Therefore, starting with table QMSTOPS, datafill the QMS tables to route only supported call types through QMS to OSSAIN. Otherwise, unsupported call types routed to OSSAIN are sent to treatment. The supported call types are the following:

- UNSPEC (unspecified)
- OH (operator handled, 0-)
- OA (operator assisted)
- DD (direct dialed, 0+)
- DELAY
- 555
- TS (toll station)
- TSUB (toll subscriber)
- 211, 311, 411, 511, 611, 711, 811, 911, 999
- HOM555 (home 555)

- FOR555 (foreign 555)
- SPARE1, SPARE2, SPARE3, SPARE4, SPARE5
- INTS (service intercept)

*DD calls:*Subtable STDPRTCT.STDPRT must properly mark direct dialed calls for operator assistance. Then, the call routes to table QMSTOPS for selection of QMS and later selection of OSSAN. Otherwise, the call tandems through the TOPS office. Refer to the datafill procedure section, subtable STDPRTCT.STDPRT, for details.

OSSAIN preprocessing (new)

In the previous paragraph, calls selected for TOPSOPR do not receive OSSAIN processing. TOPSOPR is used for call types that can not be processed by OSSAIN. These call types are station paid coin, hotel, CAMA, INWARD, ACTS, MCCS, ACTS, AABS, and ADAS. If any of these call types are assigned to OSSAIN, they are sent to treatment. However, these call types can receive OSSAIN preprocessing from a service node (SN).

Preprocessing allows for services such as service node branding of ACTS and MCCS calls. This processing occurs prior to connection of the operator or automated system. Once preprocessing is completed, the SN may request the switch to either terminate the call (if, for example, the calling party went onhook) or resume the call towards its original destination (TOPS operator or automated system). The choice is at the discretion of the SN.

OSSAIN preprocessing is selected in table CT4QNAMS by field OAINPRE = Y. And field OPRSYS selects the call type (OPR, MCCS, ACTS, AABS, ADAS, or ALL). Then, table OAINPRE selects the function. Refer to the datafill procedure section for details of these tables.

If the function is blocked in table OAFUNBLK (discussed later), which is based on the calling DN, the call continues to either an operator or automated system as if preprocessing was not selected.

Note that the selection of a CT4Q can occur at other times during a call. With QMS, refinement is possible at the PREOPR, POSTAUTO, RECALL and ASST stages. These stages correlate to fields in table TQORDERA. PREOPR queue refinement is performed before a call receives any type of operator processing (TOPS or OSSAIN). POSTAUTO refining occurs if a call leaves a TOPS automated system and requires further queuing. OSSAIN preprocessing is only allowed at the PREOPR and POSTAUTO refinement points. However, POSTAUTO has a limitation: calls refined after successfully completing the automated portion of an ADAS or ADASPLUS call are not eligible for

OSSAIN 07 Enhancements (continued)

preprocessing. POSTAUTO is used for services such as SN branding at points in a call similar to existing switch branding.

Refer to the “Limitations and restrictions" section under “OSSAIN preprocessing" for more information.

The following figures show the call and table flows.

OSSAIN 07 Enhancements (continued)

Call flow for OSSAIN preprocessing

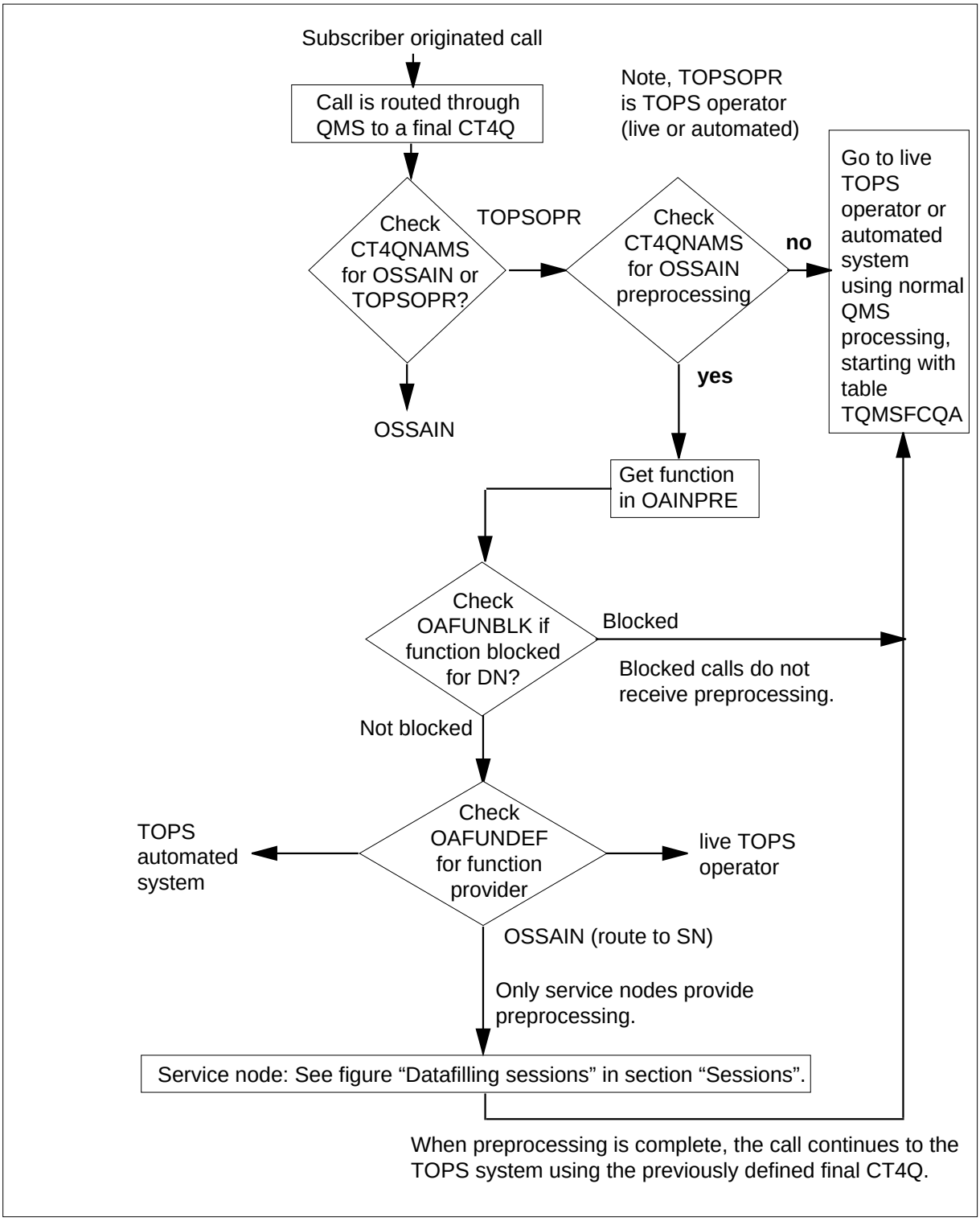

OSSAIN 07 Enhancements (continued)

Table data flow for OSSAIN pre-processing

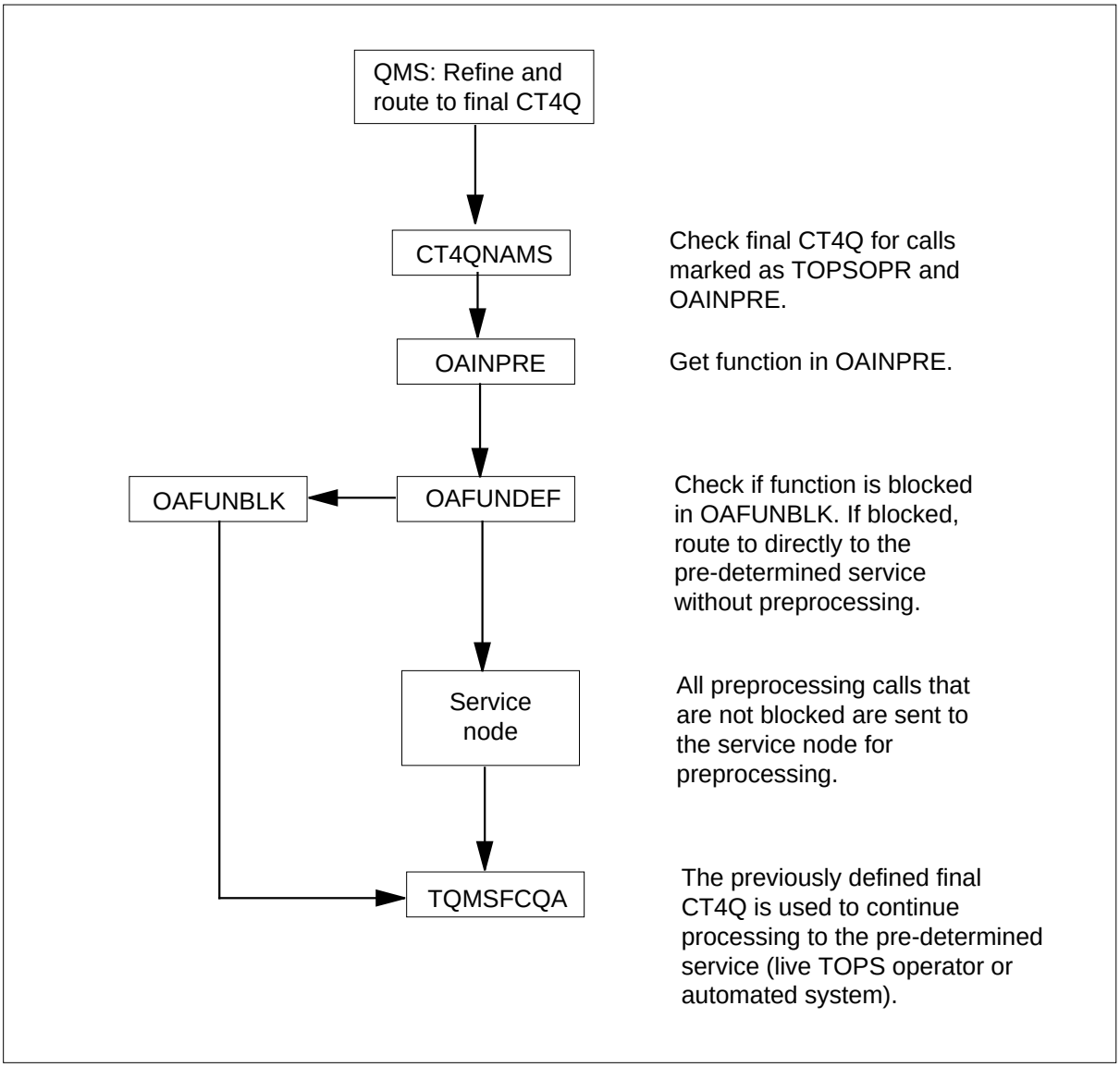

Select initial service (unchanged from OSSAIN, ENSV0014)

Table CT4QNAMS indexes into new table OAINCTLA (OSSAIN Control List Assignment) with the CT4QNAM. Note, when an operator changes the CT4Q, the index into table OAINCTLA is also changed. Table OAINCTLA contains field OALISTNM which selects the initial service. Field OALISTNM points to a list of sequentially performed services in new table OACTLDEF (OSSAIN Control List Definition). The services are defined in new table OAFUNDEF (OSSAIN Function Definition).

OSSAIN 07 Enhancements (continued)

DA calls (unchanged from OSSAIN, ENSV0014)

Also, the directory assistance (DA) system can indicate that a DA call should be routed to a service node. Then, the DA system provides an index into table OACTLDEF. This is only supported for Nortel Standard DA Protocol. Following are the call processing sequence of events for successful processing of a DA call and transfer to a service node:

1. The calling party dials DA service with NPA+555 or 411.
2. The caller is presented to DA and the DA operator.
3. If needed by the service, DA performs service eligibility screening on the calling party and their attributes.
4. Requested listing information is returned to the operator.
5. If needed by the service, DA performs service eligibility screening on the called party and its attributes.
6. If attached, the operator selects the line and releases to audio.
7. If the call is not eligible, or does not require additional services, the DA system requests that the DMS switch transfer the call to an audio response unit for normal audio treatment using existing processes.
8. If screening has passed and additional services provided by another service node are desired, a new Nortel Standard DA Protocol message from the DA system indicates to the DMS switch that the call is to be transferred to an appropriate OSSAIN service node.
9. The DMS switch receives the message and executes the Control List index specified in the message. Also, the message indicates the service node for subsequent processing.
10. The DMS switch closes out pending AMA associated with DA, and changes the call to toll and assist (TA). If there are any restrictions to the calling party, such as a coin or hotel originator, the DMS switch changes the class charge to unspecified, and forces the call to sent-paid restricted billing. The call is transferred to OSSAIN whether or not DA has been completed. If there is a `B' party as determined by DA, the call is sent to OSSAIN as a zero plus (0+) call. If there is no `B' party, the call is transferred to OSSAIN as a zero minus (0-).
11. The DMS switch notifies the appropriate OSSAIN service node.
12. The service node takes over the call.

Routing ADACC alternate billing calls to OSSAIN (unchanged from OSSAIN, ENSV0014)

ADACC calls requiring alternate billing can optionally be routed to an OSSAIN service node by a Control List for billing verification. This is done

OSSAIN 07 Enhancements (continued)

with table OAINPARM parameter ADACC_ALT_BILL. When this parameter is set to N (no, do not attempt to route to OSSAIN), ADACC alternate billing calls are sent to AABS. When set to Y (yes, attempt to route to OSSAIN) and a valid Control List is specified, ADACC alternate bill calls are sent to an OSSAIN service node.

There are some exceptions to routing ADACC calls to an OSSAIN service node, where the table is datafilled but DMS call processing continues as if the parameter was set to N. If the specified control list routes the call when any one of the following is true, the call is routed as if the parameter was set to N:

- The call is not sent to a control list that routes to a service node.
- OSSAIN is not available due to lack of software resources.
- OSSAIN is not SOCed on.
- The call is not using the QMS queuing system.

Base service type (unchanged from OSSAIN, ENSV0014)

The base service type is determined by datafill against the OSSAIN function, field ORIGSERV in table OAFUNDEF. The service is only applied once, at call setup for calls originating at the DMS switch. Calls originated by the service node always receive TA service.

DA and Intercept call types can only be disposed of by the service node by an End Call or transfer to Control List operation. Any request to float a DA or Intercept service call is denied by the DMS switch.

The service node cannot transfer DA calls (which originated at the DMS switch) to a toll and assist operator.

The service from the ORIGSERV field in table OAFUNDEF is not applied to calls originated by the service node and the service is not applied to calls transferred by the service node or operator.

Block initial service (unchanged from OSSAIN, ENSV0014)

However, a service may be blocked according to the originating directory number. This is indicated in new table OAFUNBLK (OSSAIN Function Block). The directory numbers are listed in table DNSCRN which uses table TOPSDB to index into table OAFUNBLK. If the service (function) is blocked, new table OAFNDISP (OSSAIN Function Disposition) determines handling. Table OAFNDISP is also used for handling other errors, discussed in the following section.

If a service is not blocked, table OAFUNDEF determines the service provider: an OSSAIN node, live TOPS switch operator, or TOPS switch automated

system. Only Automated Alternate Billing Service (AABS) is supported. Service by an OSSAIN node is described in later section “Sessions". Then after one of these services, the call reaches call float (defined in a later subsection). During call float, events occur that can optionally be used to select subsequent services according to datafill in new tables that are described in later paragraphs. This process is referred to as trigger processing; that is, a call float event can be datafilled to trigger processing of the call.

Error handling (new)

Standalone: Table OAFNDISP is used to handle the following errors:

- Deflection and overflow: Calls sent to OSSAIN queues may deflect or overflow as determined by the QMS CAM the same way as for operator calls.
- Blocked calls: Calls that were blocked from a function.
- Failed session: Calls that failed to send an OAP Session Begin message to a service node once an agent for that function was already selected.

For these errors, table OAFNDISP allows the call to be routed to treatment, transferred to another function, or transferred to another control list.

OSAC: If the call is deflected or overflows at the OSAC host, then the OSAC remote handles the call according to table OAFNDISP (fields DEFLACTN and OVRFACTN). These fields should be datafilled for each function in table OAFUNDEF in the OSAC remote. This table is used for active (that is, the controlling agent) service nodes only in simultaneous interactions.

The service node session pool id and session id returned from the host is verified at the remote. If the verification fails (for example, the origination type is incorrect), then action taken is based on datafill in table OAFNDISP (origination failure action field ORFLACTN).

If the OSAC remote cannot send a message to the OSAC host regarding a service node session that is in progress, the call at the OSAC remote is taken down. The OSAC remote ends the session with the service node and attempts to release the session with the OSAC host.

For new calls that require a session from the OSAC host and communication between the OSAC host and remote is down, the call is handled according to table OAFNDISP, field DEFLACTN. If no host-remote sessions are available for the call, field OVRFACTN in table OAFNDISP indicates handling.

If a failure occurs at the OSAC host regarding a centralized service node or session pool (for example, a service node goes down or a session pool is made

OSSAIN 07 Enhancements (continued)

busy), then the host sends a message to all OSAC remotes that have calls up with that service node or session pool. The message indicates that the remotes should take down these calls. The OSAC remote then begins releasing the session.

If the release session message from the OSAC remote to the OSAC host is lost, then the OSAC host uses positive assertion on the host-remote session. If a session request comes in on a host-remote session that the OSAC host thinks is active, the OSAC host releases the first call (and all resources associated with it) and begins the new call.

Any time the OSAC remote or OSAC host has to take a call down, a log is generated at the switch.

Non-OSSAIN calls (unchanged from OSSAIN, ENSV0014)

Also, non-OSSAIN calls that reach call float are candidates for trigger processing. These are the calls marked in table CT4QNAMS with field SYSAREA set to TOPSOPR which receive normal TOPS processing as prior to this functionality. These calls are from a live TOPS switch operator or automated TOPS switch operator—AABS or Mechanized Calling Card Service (MCCS). Calls from ACTS that reach call float are not supported for trigger processing due to interactions with coin recalls during the talking and disconnect periods of the call. Note that during call float an AABS call can come from either OSSAIN initial selection (table OAFUNDEF) or non-OSSAIN processing (TOPSOPR in table CT4QNAMS). But, an MCCS call can only come from non-OSSAIN processing.

A TOPS operator cannot transfer a DA or intercept service call to an OSSAIN service node.

Call float (unchanged from OSSAIN, ENSV0014)

Call float is defined as follows:

Call float occurs when a service node, operator, or TOPS automated system (only AABS and MCCS are supported for trigger processing) releases the call

and the parties are connected. Calls can be floated by the three systems under the following circumstances:

- Service node:
  - — prior to connecting to the forward party, or
  - — after connecting to the forward party, but prior to answer, or
  - — once the parties are connected and talking
- Operator:
  - — after connecting the parties, or
  - — as part of connecting the parties

  Note, at disconnect, normally the call routes to ACTS or an operator for Time and Charges. However, OSSAIN trigger processing is not supported for calls requiring Time and Charges.
- TOPS automated system (AABS or MCCS):
  - — Calls floated by AABS automated systems use dualtone multifrequency (DTMF) digit `#' to initiate a sequence call. Value OCTO datafilled in table OADTFPRF overrides this processing and routes the call to an OSSAIN node.
  - — Calls floated by AABS automated systems use DTMF digit `*' to initiate pre-OSSAIN Message Delivery Service (MDS). Value STAR datafilled in Table OADTFPRF overrides this processing and routes the call to an OSSAIN node.

Transfer to IC (unchanged from OSSAIN, ENSV0014)

Calls that reach call float are candidates for trigger processing as is described later. However, there is an exception, calls at the service node requiring an interLATA carrier (IC). When the service node determines an IC is required, the following checks are performed in table TOPEACAR:

- Whether a query should be launched for billing validation according to field OPSERV (set to SERV or NOSERV).
- Whether queries are blocked for the carrier according to the carrier number of the call as follows:
  - — Is carrier associated with the call?
  - — Is a valid carrier number associated with the call?
  - — Is the carrier valid in the office but not allowed to complete this call?

OSSAIN 07 Enhancements (continued)

- Whether a valid service type provided by the operating company for the carrier.
- Whether the class charge is valid for the particular station class of the calling party.

If the call passes these checks, the call is marked for transfer to an IC, reaches call float, is denied trigger processing, and transferred to the carrier switch. If the call fails any of these checks, it passes to trigger processing.

Trigger processing for subsequent service (unchanged from OSSAIN, ENSV0014)

For non-IC calls, after the call reaches call float, table OAINCTLA field PROFIDX can optionally point to new table OATPRFIX (OSSAIN Trigger Profile Index) for selection of subsequent services (may only be provided by an OSSAIN node) based on events during call float. Note, fields OALISTNM and PROFIDX are maintained on a call basis and can be changed by the service node or live TOPS operator during the initial call service. The operator changes this according to table TQOGTKEY which changes the final CT4Q. Also, the index into table OATPRFIX can be changed by table OAINPARM parameters if either of the following conditions occurs:

- the call is floated by AABS or MCCS, the call has not received OSSAIN processing (the call is marked in table CT4QNAMS as TOPSOPR), and table OAINPARM parameter AUTO_ALT_BILL_TRIG_PROFILE_INDEX = Y
- the call is floated by an operator, the call has not received OSSAIN processing (the call is marked in table CT4QNAMS as TOPSOPR), and table OAINPARM parameter OPR_TRIGGER_PROFILE_INDEX = Y

However, either index change can be overridden by changes to the pointer in OAINCTLA from the service node or TOPS operator.

Then, table OATPRFIX is used to index into new tables OADSCPRF, OATLKPRF, and OACNNPRF (described below) that select subsequent services only on nodes (after the initial call service). Services are selected according to call processing characteristics by the following new tables:

- OACNNPRF (OSSAIN Connecting Profile) selects services according to events during call connection. Also, this table contains indices into tables OACAUPRF and OADTFPRF.
- OATLKPRF (OSSAIN Talking Profile) selects services according to events during the talking portion of the call.

- OADSCPRF (OSSAIN Post Disconnect Profile) selects services according to events during post disconnect. Also, this table contains an index into table OADTFPRF.
- OACAUPRF (OSSAIN Cause Profile) selects services according to ISUP class and cause codes. This table can be used during call connection.
- OADTFPRF (OSSAIN DTMF Digits Profile) selects services according to DTMF digits. This table can be used during call connection and post disconnect.

The above trigger tables select subsequent services defined in tables OACTLDEF and OAFUNDEF. Subsequent services can only be provided by an OSSAIN node. Tables OACTLDEF and OAFUNDEF also define initial services which can be provided by an OSSAIN node, TOPS switch operator, or TOPS switch automated system (only AABS is supported). Therefore, table OAINCTLA, field OALISTNM (the initial service selector) can point either directly or through OACTLDEF to services datafilled in table OAFUNDEF with any of the 3 providers. And, table OAINCTLA, field PROFIDX (the subsequent service selector) can only point (through the trigger tables) to services datafilled in table OAFUNDEF with the an OSSAIN node provider.

Block subsequent service (unchanged from OSSAIN, ENSV0014)

After a service (function) is selected in OAFUNDEF, service blocking is checked and processed the same as in initial service processing.

If a call is deflected or overflows, a function is blocked, or a session begin message is not sent, table OAFNDISP redirects the call to treatment, another function, or a control list. Table QMSCQDEF contains values for determining overflow and deflection. These values can also be specified through profile specific priorities in table OQCQPROF, which overrides table QMSCQDEF.

Prepaid calling card (new)

Prepaid card service allows billing to a calling card with a preset amount of conversation time already paid by the card holder. The preset conversation time is determined by existing office parameter MINIMUM_CHARGE_DURATION in table OFCENG. Conversation time must pass the minimum charge duration threshold before billable conversation time starts accumulating. Calls that disconnect prior to the minimum charge duration have a conversation time of zero.

For calls floated prior to answer, the answer time timestamp is taken when the answer occurs and indicates the start of conversation. For calls floated after answer and conversation is started, the answer timestamp is taken when the call is floated. The conversation time is the elapsed time calculated for a call. The conversation time is calculated when one or both parties disconnects or it

OSSAIN 07 Enhancements (continued)

can be reported during any event that interrupts call timing during the talking phase of a call. In addition, a call in progress must be interrupted when conversation time for the card has expired.

Prepaid card validation is performed by the Prepaid SN by an interface to a Calling Card Database (CCDB). The DMS switch does not validate prepaid cards by a CCV or BNS query to a LIDB.

Prepaid calling card numbers are stored in AMA Module 052 - Alternate Billing Service. This is the same AMA module used to record standard calling cards as well as custom billing card numbers.

In order to support this service, table OATLKPRF has the following trigger fields:

- STOPCNVT - stop billable conversation timing
- GENAMA - generate an ama record
- RLSFWD - release the forward party

Call and tables timing diagram (unchanged from OSSAIN, ENSV0014)

The following figure shows the tables and call events used to select services:

Sequence of selecting services

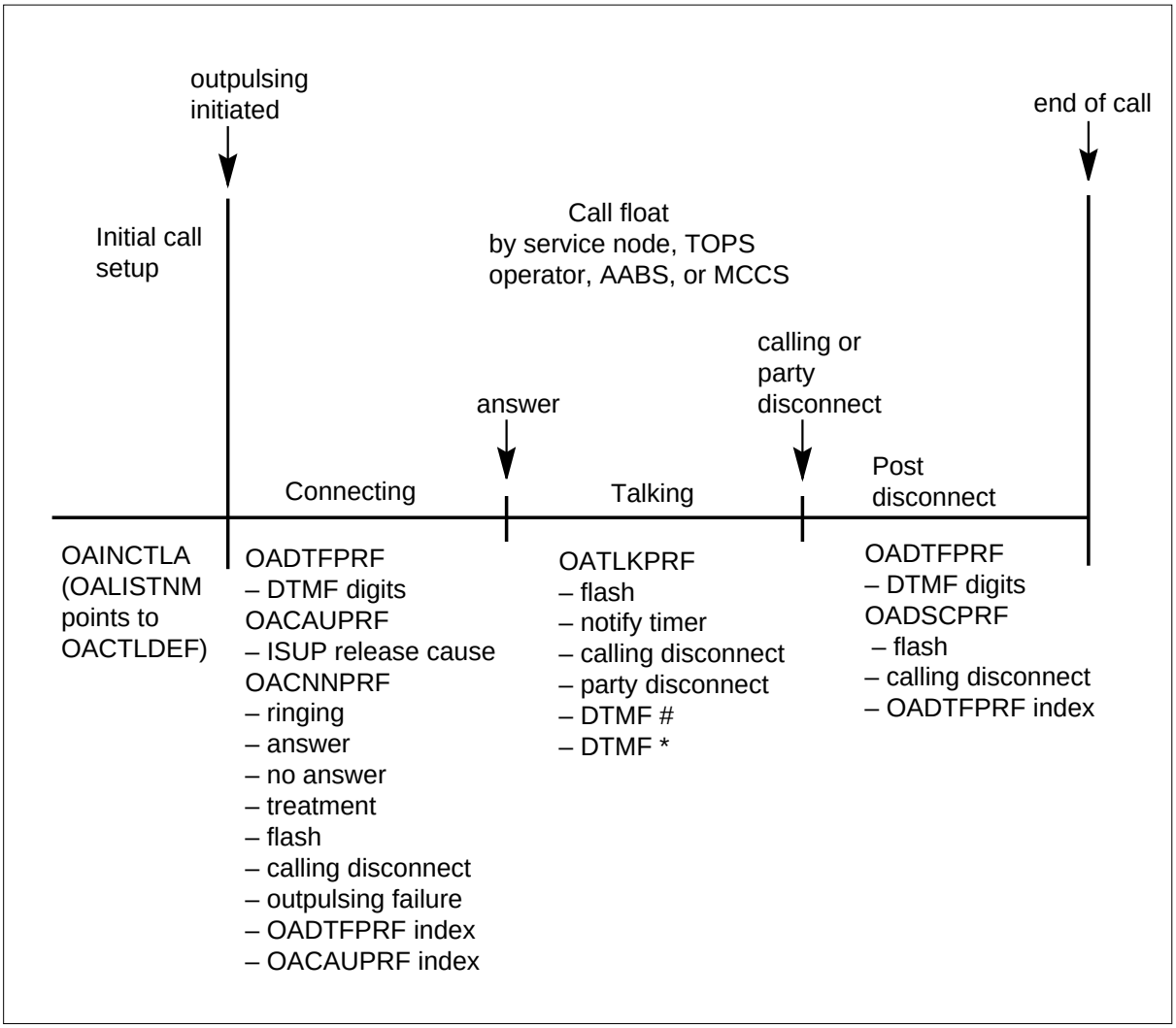

Examples (unchanged from OSSAIN, ENSV0014)

Following are call flow examples:

Yellow pages call completion with message delivery (MDS) example: In this example the subscriber dials a yellow pages service with call completion capability. Sample datafill follows this description. The call is routed to CT4Q 0+YELLOW in tables CT4QNAMS and OAINCTLA (sequentially) which points to profile 0 in the Connecting, Talking, and Disconnect profiles with no triggers datafilled, denoted below with $ signs.

OSSAIN 07 Enhancements (continued)

Profile 0

- Connecting Profile $
- Talking Profile $
- Disconnect Profile $

The call arrives at the yellow pages service node with a trigger profile of 0. The service node offers the subscriber call completion and the subscriber accepts. The yellow pages node then provides access to an MDS node should the DMS switch detect no answer at the terminating party. The service node modifies the trigger profile index to 6 (table OATPRFIX) which provides MDS access in table OACNNPRF.

Profile 6

- Connecting Profile
  - — NOANS - MDS
  - — Cause User Busy - MDS
  - — DTMF * - MDS
- Talking Profile $
- Disconnect Profile $

With this profile in table OACNNPRF, the subscriber is automatically routed to Message Delivery if No Answer (field PROFILE) or ISUP Cause User Busy (field CAUSEPRF) is detected. Message Delivery can also be accessed by the subscriber keying a * (field DTMFPRF).

Following is sample datafill for this and the following call flow examples:

MAP display example for table CT4QNAMS

```
CT4QNUM  CT4QNAME    NOAMA  SYSAREA
---------------------------------------------------------
0        UNSPEC      N      TOPSOPR  N  N  N
1        DA_411      N      TOPSOPR  Y 411_OPR  N  N
2        0+YELLOW    N      OSSAIN
3        DEBIT_CARD  N      OSSAIN
4        PCS_OPR     N      TOPSOPR  Y PCSOPR  N  N
```

OSSAIN 07 Enhancements (continued)

MAP display example for table OAINCTLA

```
CT4Q          OALISTNM         OATPRFIX
-------------------------------------------------------
0+YELLOW      YEL_PAGE         Y 0
DEBIT_CARD    DEB_CD           Y 0
```

MAP display example for table OATPRFIX

```
IDX  CPROFIDX  TPROFIDX  DPROFIDX
-------------------------------------------------------
0     Y 0       Y 0       Y 0
6     Y 2       Y 0       Y 0
8     Y 3       Y 4       Y 5
```

MAP display example for table OACNNPRF

```
CONNIDX  PROFILE                          DTMFPRF  CAUSEPRF
-------------------------------------------------------
0         $                                N        N
2        (NOANS Y FUNCTION MDS_NODE)$     Y 7      Y 8
3        (CLGD Y FUNCTION DEBIT_NODE)$    N        N
```

MAP display example for table OATLKPRF

```
TALKIDX   PROFILE
                                      STAR  OCTO  HOLDRCVR
-------------------------------------------------------
0          $                           N     N    N
4        (NOTFY N N N Y CTRLLIST DEBIT_NODE)
         (CLGD N N N Y CTRLLIST DEBIT_NODE)
         (PTYD N N N Y CTRLLIST DEBIT_NODE) $
                                      N     N    N
```

OSSAIN 07 Enhancements (continued)

MAP display example for table OADSCPRF

```
DISCIDX  PROFILE                                          DTMFPRF
---------------------------------------------------------------
0         $                                                N
5       (PTYD Y CTRLLIST DEBIT_NODE)
        (CLGD Y CTRLLIST DEBIT_NODE) $                     N
```

MAP display example for table OADTFPRF

```
DTMFIDX  PROFILE                                        HOLDRCVR
---------------------------------------------------------------
7       (STAR N N FUNCTION MDS_NODE)$                       Y
```

MAP display example for table OACAUPRF

```
IDX   PROFILE
---------------------------------------------------------------
8    (NORM 17 FUNCTION MDS_NODE)
     (NORM 18 FUNCTION MDS_NODE)
     (NORM 19 FUNCTION MDS_NODE)
     (CL2 FUNCTION MDS_NODE) $
```

Debit card example: In this example a subscriber makes a call billed to the subscriber's debit card. The call arrives at the DMS switch and is assigned a Profile Index of 0. There are no triggers associated with trigger profile 0. Refer to the datafill examples in the prior call flow example.

Profile 0

- Connecting Profile $
- Talking Profile $
- Disconnect Profile $

The call arrives at the debit billing node. The debit node determines that the subscriber has only 5 minutes of conversation time remaining on the debit card. The debit node should be notified when a talking time of 5 minutes has transpired. In the call float operation to the DMS switch the debit card sets the profile index and a notification timer. For this example the debit node sets the profile index to 8 and the notification timer to 5 minutes. Profile index 8 has a notification trigger for the talking state as follows:

Profile 8

- Connecting Profile $
  - CLGD - DEBIT
- Talking Profile
  - NOTIFY - DEBIT
  - CLGD - DEBIT
  - PTYD - DEBIT
- Disconnect Profile
  - CLGD - DEBIT

Upon answer, the call is floated, enters the talking state, and a 5 minute notification timer is started by the DMS switch. If the notification timer expires the Debit node is brought back into the call. It then debits the card, informs the subscribers, and discontinues the call.

Alternatively, either party could disconnect prior to the expiration of the 5 minute notification timer. In this scenario, the debit node is brought back into the call to debit the card.

Selecting services for operator floated and automated system calls (unchanged from OSSAIN, ENSV0014)

Operator floated, AABS, and MCCS calls can be processed by OSSAIN. This includes DA calls since they involve an operator. Selection of services for these calls is controlled by new table OAINPARM (OSSAIN Parameters). Refer to the datafill procedure section for details.

OSSAIN processing is not available for ACTS calls.

Sessions

Standalone configuration (unchanged from OSSAIN, ENSV0014)

This section is supported in OSSAIN, ENSV0014, and repeated for reference.

An OSSAIN service node provides sessions to a host switch. A session consists of an agent (operator) performing a function (service). Sessions serve OSSAIN call queues just as TOPS operators serve TOPS call queues. A session pool is a group of sessions that provide the same function or functions. There is an ID for the session pool. Session pools are defined in new table OASESNPL (OSSAIN Session Pool). Table flow is shown in the following figure:

OSSAIN 07 Enhancements (continued)

Datafilling sessions (OSSAIN operators)

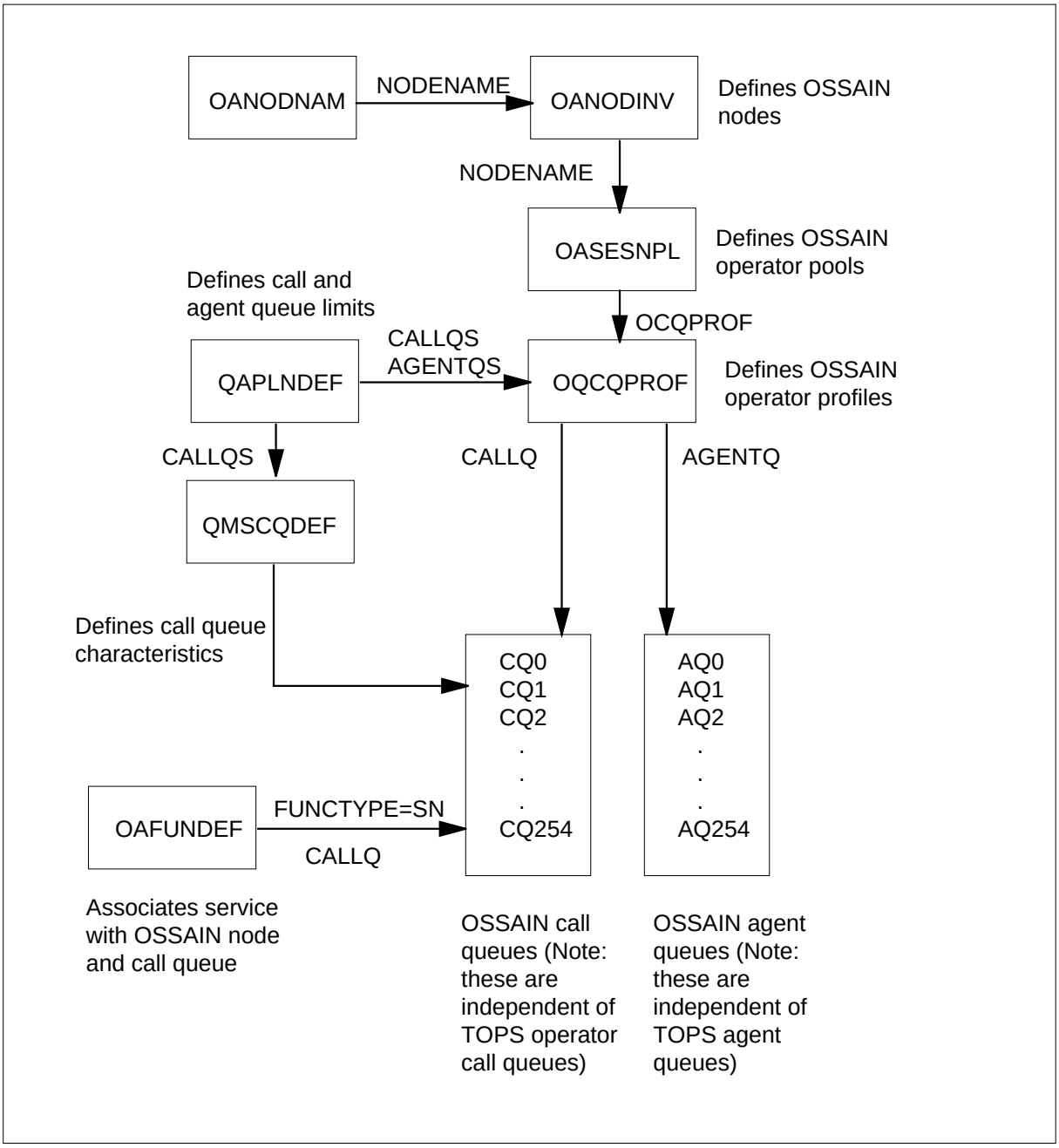

Details of the above tables are given in the datafill procedure section. In the above figure, node names are defined in tables OANODNAM and OANODINV. A node may contain zero or more session pools, defined in table OASESNPL. Each session pool may provide one or more functions. Table OASESNPL contains an index into table OQCQPROF which defines agent

and call queue profiles. The call queue profile specifies which call queues (which are dedicated to functions) are served by the session pool with this profile index. The agent and call queue sizes are limited by table QAPLNDEF. The function (service) of each call queue is defined in table OAFUNDEF.

The following is sample datafill for table OASESNPL:

MAP display example for table OASESNPL

```
SESNPLID SESNPLNM     MAXSESN   NODENAME
                                                                ORIGAREA
-------------------------------------------------------------------------
0       BRAND_NODE1   50          NODE_1
                SUBSCRIBER  S  USEDEFLT  USEDEFLT N 51 UDP 3000 3001
1       BRAND_NODE1   100         NODE_2
                SUBSCRIBER  S  USEDEFLT  USEDEFLT N 52 UDP 4000 4001
2       YELPG_NODE1   50          NODE_1
                SUBSCRIBER  S  USEDEFLT  USEDEFLT N 53 UDP 3000 3001
3       BRDYP_NODE1   150         NODE_1
                SUBSCRIBER  S  USEDEFLT  USEDEFLT N 54 UDP 3000 3001
4      AUTOBILL_NODE3 100         NODE_3
                SUBSCRIBER  S  USEDEFLT  USEDEFLT N 55 UDP 5000 5001
```

Table OASESNPL defines the session pool ID (SESNPLID), session pool name (SESNPLNM), and service node (NODENAME) for these sessions.

The function identifier and session pool identifier are datafilled on both the switch and the service node, as well as the maximum number of simultaneous sessions that can be handled by that session pool.

The above example shows the following configurations:

- One function on one service node.

  Node_3 only has autobilling with 100 agents in the fifth tuple. No other tuples contain session pools that provide services on node_3 and this service is not provided by session pools on any other nodes. This is the simplest configuration.

- Multiple functions on one service node.

  Node_1 contains 3 session pools that provide services: branding, yellow pages, and a combination pool of yellow pages/branding. These pools are of 2 types: dedicated (50 agents for each service) and combination (150 agents). This ensures that at least 50 agents are dedicated to each service,

OSSAIN 07 Enhancements (continued)

while 150 agents can be used for either service. Or, the combination pool could be located on a separate node.

- One function on multiple service nodes.

  The branding service is located on nodes 1 (50 agents) and 2 (100 agents). When the branding function is requested, OSSAIN selects the most idle agent from amongst these two pools. This configuration is especially useful when one service node is unable to handle the volume of traffic for a service.

Table OASESNPL contains an index into new table OQCQPROF (OSSAIN Call Queue Profiles). This table is very similar to its TOPS counterpart, table TQCQPROF (TOPS QMS Call Queue Profiles table). The only difference between the tables is that table TQCQPROF includes information on how to handle delay calls from operators with a given call queue profile. This information is not needed for OSSAIN. Table OQCQPROF indicates the call queues a session pool can serve. The size of the call and agent queues are limited by table QAPLNDEF. Following is sample datafill:

MAP display example for table OQCQPROF

```
CQPROFNM  AGENTQ                                    PRIOAREA
---------------------------------------------------------
0         AQ0        OFC (CQ0)$
1         AQ1        OFC (CQ1)$
2         AQ3        OFC (CQ0)(CQ1)$
3         AQ4        PROF (CQ0 10)(CQ1 80)$ (CQ2 10)$
```

OSAC configuration (new)

In a centralized configuration, when a call is sent from either a subscriber or service node to a remote, the following sequence takes place:

1. The remote checks table OAFUNDEF for the location of the function. The following is sample datafill:

MAP display example for table OAFUNDEF in the OSAC remote

```
FUNCNUM  FUNCNAME        FUNCAREA
--------------------------------------------------
0        CLG_CARD        SN  Y  TASERV  CQ0
1        AUTO_BILLING    SN  N  TASERV  OSAC_HOST1_SP
2        BRANDING        SN  Y  TASERV  CQ2
```

If, for example, AUTO_BILLING was the function, the above datafill indicates the function is in a service node (field FUNCTYPE = SN) and

QMS control for the function is not in the remote (field CAMHERE = N) but in the host.

2. Since the function is provided by a service node, the remote must initiate a host-remote session with the host to request a session with the service node. The name of the host-remote session is specified in tables OAFUNDEF (OSAC_HOST1_SP in the above example tuple) and OASESNPL as follows:

MAP display example for table OASESNPL in the OSAC remote

```
SESNPLID SESNPLNM      MAXSESN NODENAME  ORIGAREA
-------------------------------------------------------
3       OSAC_HOST1_SP  30      HOST1     OSACORIG
```

The host must also contain the host-remote session in table OASESNPL, shown in the following example:

MAP display example for table OASESNPL in the OSAC host

```
SESNPLID SESNPLNM      MAXSESN NODENAME  ORIGAREA
-------------------------------------------------------
3       OSAC_HOST1_SP  30      REMOTE1      OSACTERM
```

OSSAIN 07 Enhancements (continued)

In the above two examples, all fields must match between the host and remote, except for field ORIGAREA which must be set as shown above.

3. At the host, since the remote is requesting a session with a service node using AUTO_BILLING, the host checks table OAFUNDEF to verify the location of this service as follows:

MAP display example for table OAFUNDEF in the OSAC host

```
FUNCNUM  FUNCNAME        FUNCAREA
-----------------------------------------
1        AUTO_BILLING    SN  Y  TASERV  CQ1
```

The above example indicates that QMS control is in the host (CAMHERE =Y). Note, the function number (FUNCNUM = 1) must match between the host and remote.

The requested service node session must be datafilled in both the host and remote. The following is sample datafill:

MAP display example for table OASESNPL in the OSAC host

```
SESNPLID SESNPLNM      MAXSESN   NODENAME
                                                              ORIGAREA
-------------------------------------------------------------------------
10      AUTOBILL_NODE3 100       NODE_3
                                        SUBSCRIBER SH N 9 UDP 5001
11      AUTOBILL_NODE3 100       NODE_3
                                  SN USEDEFLT USEDEFLT UDP 5000 5001
```

MAP display example for table OASESNPL in the OSAC remote

```
SESNPLID SESNPLNM      MAXSESN   NODENAME
                                                              ORIGAREA
-------------------------------------------------------------------------
10      AUTOBILL_NODE3 100       NODE_3
                           SUBSCRIBER R USEDEFLT USEDEFLT N UDP 5000
```

In the above datafill, tuples must match between the host and remote, except for SWITCHTYP and refinements. In the host, set field ORIGTYPE = SUBSCRIBER and field SWITCHTYP = SH (if the host is acting as a standalone/host). In the remote, set field ORIGTYPE = SUBSCRIBER and field SWITCHTYP = R.

The following are table flows for the OSAC remote and host.

OSSAIN 07 Enhancements (continued)

OSAC remote table flow

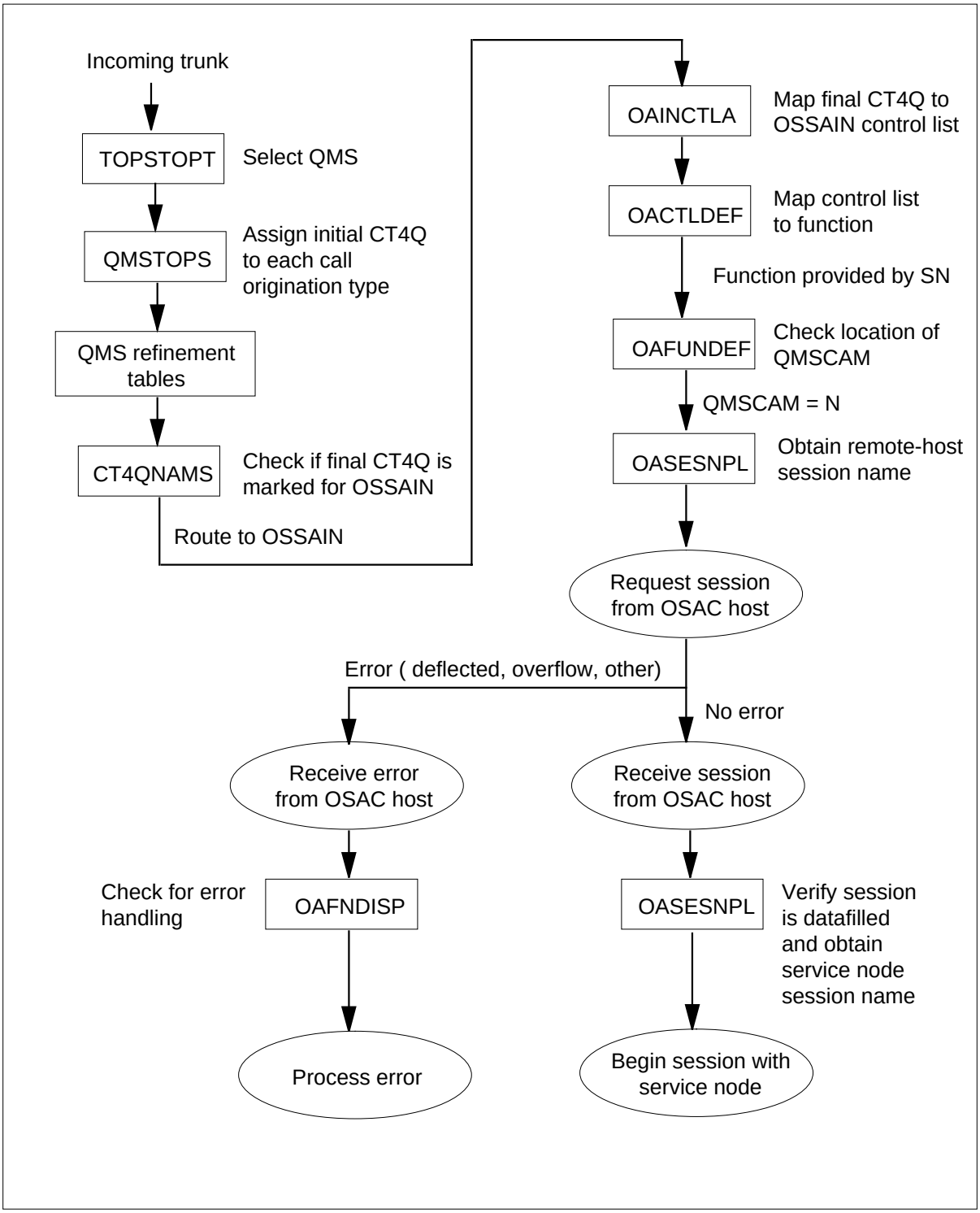

OSSAIN 07 Enhancements (continued)

OSAC host table flow

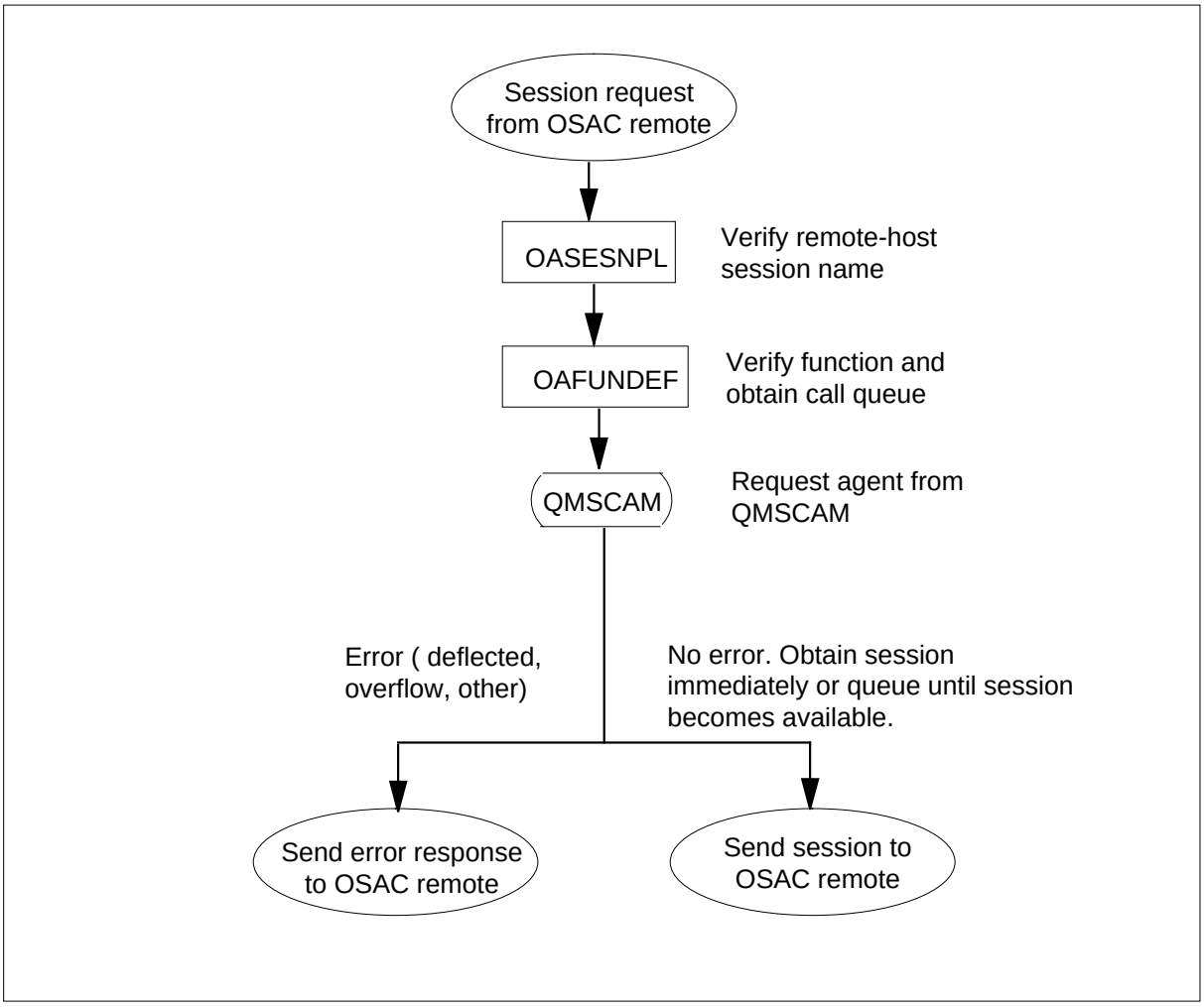

Trigger event inform session (new)

The previously discussed sessions include the following:

- The switch sends trigger event information to the SN.
- Either the switch or SN has call control.

Trigger event information can be sent to the SN without giving the SN control of the call. The trigger event information must be sent immediately after the trigger event occurs so no call or trigger data is lost before the next trigger event. The remote must obtain a SN session immediately to send the trigger event information.

The solution is a trigger event inform session for subscriber originated calls. This session is used to send a trigger event inform message to the SN. This

session is immediate, that is the next available session is selected. This is important for a remote since host approval is not required. This session type is required for remotes only, but is available to standalone and standalone/host switches. This session is datafilled in table OASESNPL as a subscriber originated session with field TRIGEVNT = Y. This type of session pool is used only for trigger event inform messages. The following is sample datafill:

MAP display example for table OASESNPL

```
SESNPLID SESNPLNM      MAXSESN   NODENAME
                                                                ORIGAREA
-------------------------------------------------------------------------
50       SN_A_SPT       100       SN_A
                  SUBSCRIBER S USEDEFLT USEDEFLT Y UDP 7001 7002
51       SN_A_SP       100       SN_A
                  SUBSCRIBER S USEDEFLT USEDEFLT N 51 UDP 7001 7002
60       SN_B_SPT       100       SN_B
                  SUBSCRIBER SH USEDEFLT USEDEFLT Y UDP 7001 7002
61       SN_B_SP       100       SN_B
                  SUBSCRIBER SH USEDEFLT USEDEFLT N 61 UDP 7001 7002
70       SN_C_SPT       100       SN_C
                  SUBSCRIBER R USEDEFLT USEDEFLT Y UDP 7001 7002
71       SN_C_SP       100       SN_C
                  SUBSCRIBER R USEDEFLT USEDEFLT N 71 UDP 7001 7002
```

The above tuples are described in the following:

- 50 - This is a standalone switch, subscriber originated session pool used only for trigger event informs since TRIGEVNT = Y.
- 51 - This is a standalone switch, subscriber originated session pool used for subscriber originations and trigger event informs since TRIGEVNT = N.
- 60 - This is a standalone/host switch, subscriber originated session pool used only for trigger event informs.
- 61 - This is a standalone/host switch, subscriber originated session pool used for subscriber originations and trigger event informs.
- 70 - This is a remote switch, subscriber originated session pool used only for trigger event informs.
- 71 - This is a remote switch, subscriber originated session pool used for subscriber originations and trigger event informs.

The above trigger event sessions are datafilled against functions in table OAFUNDEF with field TRIGEVNT = Y. The following is sample datafill:

OSSAIN 07 Enhancements (continued)

MAP display example for table OAFUNDEF in the OSAC remote

```
FUNCNUM  FUNCNAME    FUNCAREA
--------------------------------------------------------
1        FN_1        SN TASERV N  Y CQ1
2        FN_2        SN TASERV Y SN_A_SPT N  HOST2_SP
```

The above example shows that if a call triggers back to function FN_2 and call control is not given to the SN, then a SN_A_SPT session pool is used for trigger event information.

OSAC session throttling (new)

Service node session requests are serviced on a first come first serve basis by the OSAC host. Therefore, it is possible that a poorly engineered network suffers from “starving remotes". This occurs when one OSAC remote uses most of the service node sessions and, thus, prevents other OSAC remotes from obtaining sessions to the same service node. This can be avoided by adjusting (or throttling) the number of host-remote sessions to the OSAC host each remote has to the host (that is, adjusting field MAXSESN in table OASESNPL for the host-remote session pool). The number of sessions for the remote causing the “starvation" can be reduced and, thus, allow other remotes to obtain sessions to the service node.

Another type of situation occurs when an OSAC remote that handles a large call volume is provisioned with a small number of host-remote sessions for interactions with the OSAC host. This can be avoided by provisioning host-remote sessions based on the anticipated call volume for each OSAC remote while making sure that the OSAC host is not over engineered.

OSAC error handling (new)

Table OAFNDISP in the remote is used for functions in active (that is, the controlling agent) service nodes only. Table OAFNDISP in the remote is checked for handling of the following errors:

- A call deflects or overflows at the host. Then, the remote checks field DEFLACTN (deflection) or OVRFACTN (overflow).
- The service node session pool ID and session ID returned from the host fail verification at the remote. If this is due to an incorrect origination type, then the remote checks field ORFLACTN (origination failure action).

- Communication between the host and remote is down for a new call that requires a session from the host. Then, the remote checks field DEFLACTN (deflection failure action).
- No host-remote sessions are available for a call. Then, the remote checks field OVRFACTN (overflow failure action).

If a remote or host takes down a call, a log is generated at the switch.

Transitions (unchanged from OSSAIN, ENSV0014)

Transitions between services are not always allowed. Table OAINPARM parameter MAX_ALLOWED_TRANSITIONS limits the number of successful transitions. When this number is exceeded, the call is routed to the treatment in parameter DEFAULT_TREATMENT of table OAINPARM. For all transfers, table OACTLDEF is checked for the requested control list name. If not datafilled, the node (service node or switch for an operator or automated service) receiving the request asks for another service from the requesting node. Then, table OAFNDISP is accessed for an alternate service. Following are possible transitions and if allowed:

- service node to service node

  This transfer is allowed if the control list name is datafilled in table OACTLDEF.

- service node to operator

  This transfer is allowed if the control list name is datafilled in table OACTLDEF. Once an agent is obtained, the position type is checked. If the agent is a TOPS IV or a TOPS MP position, a log is generated, a return error message is sent, and the call is taken down since these position types are not supported for OSSAIN. Therefore, datafill should not route calls to these positions. These position types can not receive OSSAIN calls; however, these positions can still receive 0- traffic which can then be directed to an OSSAIN control list.

  Since transitions are allowed from a service node to TOPS MPs, OSSAIN can be utilized without replacing existing TOPS MP terminals. However, a TOPS MP terminal does not have equivalent functionality—the ability to pass Context Block, custom automatic message accounting (AMA)—to that of an open position protocol (OPP)-compatible position, but, the MPs can still be utilized for operator backup.

  For transfers from the service node to a TOPS MP position, a display message is passed for the operator. Therefore, the language of the message must be considered. For example, a calling subscriber has arrived at the SN and selected Spanish as the language for their interaction with the SN. If the SN is going to transfer to an human operator for backup and place the

OSSAIN 07 Enhancements (continued)

call in a Spanish queue, the SN may want to place the string in Spanish. This type of decision making relies on development and coordination between the Operating Company and the SN provider.

If a call recalls to a service node as the result of a trigger or if a called party is connected, the service node should not transfer this call to an operator. If the service node attempts this transfer, the called party is released and an AMA record is automatically generated along with an OAIN604 log. Alternatively, the node can request a `GEN AMA' to complete billing for the call, and then transfer to an operator.

- service node to AABS

  This transfer is allowed if the requested control list name and call details are valid. The required call details are listed in the “Limitations and restrictions" section. If the call details fail, the call is routed to an operator using the datafilled CT4Q in field OPRONFL of table OAFUNDEF.

- position (TOPS IV, TOPS MP, or OPP-compatible) to service node

  This transfer is accomplished by setting a new CT4Q which maps to a control list where the datafilled function is provided by a service node.

- position (TOPS IV, TOPS MP, or OPP-compatible) to operator

  This transfer is not allowed for OSSAIN transitions. If the requested CT4Q maps to a control list where the datafilled function is provided by an operator, the position release is not acknowledged (NACKed) and the call remains in the initial operator's control. However, standard TOPS transfers from operator to operator are not impacted.

- position (TOPS IV, TOPS MP, or OPP-compatible) to existing TOPS automated system

  This transfer is not allowed for OSSAIN direct transitions. If the requested CT4Q maps to a control list where the datafilled function is provided by AABS, the position release is NACKed and the call remains in the initial operator's control. However, standard TOPS operator handoff to AABS is not impacted.

- DA system to service node

  This occurs if the DA system indicates a DA call should be routed to a service node. Then, the DA system provides an index into table OACTLDEF. This is only supported for Nortel Standard DA Protocol.

Sanity timers (unchanged from OSSAIN, ENSV0014)

The following sanity timers are provided to ensure that resources are not left connected to a dead call:

- On-hook - refer to table OAINPARM, parameter ON_HOOK_TIMER_DURATION
- Call - refer to table OAINPARM, parameter CALL_SANITY_TIMER_DURATION.
- Queued - This timer clears up calls that are queued for a service node but the session pools that serve the call queue are out of service or are drained.. This timer is set if a call is queued with all remaining parties on-hook or the remaining parties go on hook while queued. The timer is set for 10 seconds. When the timer expires, the call is taken down by the switch and an OAIN601 log is generated. This timer is not controlled by a datafillable parameter.

Simultaneous interactions (new)

Two agents may be simultaneously connected to a call. These agents may be two service nodes or a service node and a TOPS operator. Only one agent is considered active, that has call control. The other agent is passive. The TOPS operator is never active, so a service node is always the active agent. No additional datafill is required for this capability.

Parallel datafill (new)

This section summarizes the requirements for matching or correlating datafill between nodes.

Between OSAC host and service node (new)

The standalone and OSAC configurations have the same parallel datafill requirements. The service node IDs (table OANODINV) and session pool IDs (table OASESNPL) must be datafilled at the host. The logical voice channel IDs (table OAVLMAP) used with the service node must be datafilled at the OSAC host only (not remote).

Between OSAC host and OSAC remote (new)

The following tables require parallel datafill between the OSAC host and remote. Refer to prior sections “Defining OSSAIN nodes" and “Sessions" for example parallel datafill between OSAC switches.

- Table OAFUNDEF: The function ID must be datafilled in the OSAC remote and OSAC host. The function ID datafill in the remote indicates that the CAM for the function is at an OSAC host and specifies the host-remote session pool. The function ID datafill in the OSAC host is similar to a standalone case. The function ID specifies the call queue for the function. Parallel datafill checks for table OAFUNDEF are not verified

OSSAIN 07 Enhancements (continued)

during the RTS sequence between OSAC switches. However, the data is checked during call processing.

- Table OANODINV: This table is used to datafill the OSAC switches and service nodes. In the OSAC remote, the OSAC host must be datafilled as an OSAC node type. In the OSAC host, the OSAC remote must be datafilled as an OSAC node type.

  The centralized service node is also datafilled in table OANODINV in both the host and remote. In the OSAC remote, the service node is datafilled as an OSN node. In the OSAC host, the service node is datafilled as an OSNM node.

  Parallel datafill for table OANODINV is verified during the OSAC and OSN node RTS sequence, OSAC and OSN node audits, and OSAC and OSN node manual tests.

  — OSAC nodes: When an OSAC node parallel datafill check is performed, the originating switch sends information it has datafilled about itself and the destination OSAC switch. The destination OSAC switch then compares this data to what it has datafilled for itself and the originating switch. The following fields are verified:

    – Node ID
    – PM type
    – Protocol name
    – IP address type
    – IP address

  — OSN nodes: When an OSAC remote brings an OSN node into service, the OSAC remote first sends the datafill it has for the OSN node to the OSAC host to be verified. When the OSAC remote performs a manual test or automated audit of the connection to the OSN node, the remote also verifies its datafill with the OSAC host. Refer to the *TOPS OSSAIN User Guide*, 297-8403-901, section “OSN node automated maintenance" for information regarding node audits. The following fields are verified:

    – Node ID
    – PM type
    – Protocol name
    – IP address type
    – IP address

- Table OASESNPL: The service node session pool must be datafilled at both the OSAC remote and OSAC host. The same information should be datafilled at both switches, except the switch type field and callp/session pool maintenance port numbers. The switch type field at the remote is R (remote) and at the host is SH (standalone/host). The host-remote session pool must also be datafilled at both the OSAC host and remote.
  - Host-remote session pools: This is verified during the session pool RTS sequence. The OSAC remote sends what it has datafilled for the host-remote session pool to the OSAC host. The following fields are verified:
    - Session pool ID
    - Max sessions
    - Node ID
    - Protocol
    - origination type
  - OSN node session pools: The OSAC remote switch verifies session pool datafill for session pools datafilled on OSN nodes during RTS of the connection to the OSN node. The session pool datafill information is sent along with the OSN node's datafill information to the OSAC host datafilled in table OANODINV for the service node. The session pool datafill is also checked during the OSN manual test and automated connection audit. The following fields are verified:
    - Session pool ID
    - Max sessions
    - Node ID
    - Protocol
    - Origination type
    - Switch type

  The service node session pool information is also be checked during call processing. The OSAC remote verifies the datafill of the session pool ID and the session ID returned from the OSAC host.
- Table OAVLMAP: The logical host-remote voice links must be datafilled at both the OSAC host and remote. Datafill checks for table OAVLMAP are not verified during the RTS sequence between OSAC switches. Limited verification of data is checked during call processing. Host-remote

OSSAIN 07 Enhancements (continued)

voice channels and service node voice channels must be configured correctly.

- Table TOPSPOS: In an OSAC environment, position numbers must be distinct across the network. That is, the position numbers must be unique between the host and remotes.

Between OSAC remote and service node (new)

The same parallel datafill required between a standalone switch and a service node is required between an OSAC remote and a centralized service node, except for voice channel ID's (for example, control list, function, language, treatment). Refer to the OAP Specification Document for a list of required parallel datafill.

The voice channel IDs are datafilled at the host instead of the remote in an OSAC environment.

Extension blocks (changed)

This section is changed from OSSAIN, ENSV0014, by the addition of parameter OSAC_NUM_RU and the OSAC remote column in the following table.

The number of extension blocks is determined by the sum of the following table OFCENG parameters:

Extension blocks in OSSAIN call

Standalone host	OSAC host	OSAC remote
TOPS_NUM_CAMA_RU	OSAC_NUM_RU	TOPS_NUM_CAMA_RU
NUM_TOPS_RU		NUM_TOPS_RU
OSSAIN_NUM_RU		OSSAIN_NUM_RU

Note, the DEBUG and DISPCALL tools are used to display extension blocks.

Protocol versions (new)

With OSAC, a centralized service node must be able to communicate at different protocol versions. Therefore, each node (service nodes and OSAC switches) must be able to support up to 3 releases older than the node's current release. All increments of a release must be supported. This allows OSAC switches and centralized service nodes to be upgraded on different schedules.

Upgrade from standalone to OSAC configuration (new)

The following is a summary listing for changing from a standalone to an OSAC configuration:

- Datafill in the host
  - — Add host (as SELF), remote (as OSAC OTHER) and any new service nodes (as OSNM) in OANODINV.
  - — Add host-remote (as OSACTERM), service node (as SUBSCRIBER SH), and service node originated (as SN) sessions in OASESNPL.
  - — Add host-remote voice links in CLLI, TRKGRP, TRKSGRP, TRKMEM, OAVLMAP, and OSCVLGRP.
  - — Add voice links for any new service nodes in CLLI, TRKGRP, TRKSGRP, TRKMEM, and OAVLMAP.
  - — Add new functions with node and QMS locations (CAMHERE = Y) in OAFUNDEF.
  - — Allocate OSAC extension blocks in parameter OSAC_NUM_RU in table OFCENG.
  - — For each function with CAMHERE = Y, add new QMS call queues for in QAPLNDEF, QMSCQDEF, and OQCQPROF.
  - — Verify in table TOPSPOS that position numbers are distinct (not the same) across the network. That is, the position numbers are unique between the host and remotes.
- Datafill in the remote
  - — Add host (as OSAC OTHER), remote (as SELF) and centralized service nodes (as OSN) in OANODINV.
  - — Add host-remote (as OSACORIG), service node (as SUBSCRIBER R), and service node originated (as SN) sessions in OASESNPL.
  - — Add host-remote voice links in CLLI, TRKGRP, TRKSGRP, TRKMEM, and OAVLMAP.
  - — Add functions with node and QMS locations (CAMHERE = N) in OAFUNDEF.
  - — Add three-port conferences in CONF3PR and associated tables (refer to CONF3PR in data schema).
  - — Add an EIU in LIUINV, IPNETWRK, IPROUTER, and IPTHRON.
  - — Datafill QMS tables TOPSTOPT, QMSTOPS, refinement tables, CT4QNAMS, TQORDERA, TQORDERB, and TQMSOPT (order of refinement tables).

OSSAIN 07 Enhancements (continued)

— Datafill all OSSAIN tables.

— Verify in table TOPSPOS that position numbers are distinct (not the same) across the network. That is, the position numbers are unique between the host and remotes.

Logs

For OSAC, the following logs are created, changed, or used:

- AUD 629 is new.
- EXT 106-108 are new.
- OAIN 201, 301, 602, 603, 616-623, 700, and 701 are new.
- OSAC 200-202, 300, 600, and 601 are new.
- TCCI100 and 101 are used, 102 is new. (Not used specifically for OSAC.)
- OAP 600-602

The following logs are used for OSSAIN (standalone and OSAC):

- AUD607 - This log is generated when an OSSAIN call traps or dies and there is an OSSAINRU extension block attached to the call.
- AUD609 - This log is generated at the OSAC host when an OSAC call traps or dies and the call has an OSAC extension block.
- AUD629 - EXT dump. This audit log is associated with the OSAC extension block. This log is generated at the OSAC host when an OSAC call traps or dies and it has an associated OSAC extension block attached to the call.
- DAS105 - This log indicates a failure when transferring to an OSSAIN service node because of resource problems. This could indicate an insufficient number of available software resources, that OSSAIN is turned off in the DMS switch or that the call is not using the required QMS CAM queuing system. A message is printed out in the log to indicate which of these checks failed.
- DAS106 - This log indicates a failure when transferring to an OSSAIN service node due to an invalid Control List Identifier. This log could indicate either bad data from the DA system or a datafill problem in the DMS switch.
- EXT106 - This log is generated with a reason of either SP_MINOR or SN_MINOR. SP_MINOR is when the DMS switch receives a minor alarm request from a session pool. SN_MINOR is when the DMS switch receives a minor alarm request from a service node.

OSSAIN 07 Enhancements (continued)

- EXT107 - This log is generated with a reason of either SP_MAJOR or SN_MAJOR. SP_MAJOR is when the DMS switch receives a major alarm request from a session pool. SN_MAJOR is when the DMS switch receives a major alarm request from a service node.
- EXT108 - This log is generated with a reason of either SP_CRITICAL or SN_CRITICAL. SP_CRITICAL is when the DMS switch receives a critical alarm request from a session pool. SN_CRITICAL is when the DMS switch receives a critical alarm request from a service node.
- OAIN200 - This log is generated when an attempt is made to find the disposition for an OSSAIN call and there is no entry for the current function name in table OAFNDISP. The function should be datafilled in table OAFNDISP.
- OAIN201 - This log is generated at the OSAC host or standalone switch when a service node requests a connection to a logical voice channel that is not datafilled in table OAVLMAP. The failure is reported to the service node and then the node may choose to select another logical voice channel for the voice connection. Table OAVLMAP should be datafilled.
- OAIN202 - This log is generated when an attempt is made to transfer to a TOPS operator for an OSSAIN call and the position selected is a TOPS IV or TOPS MP. The service profile datafilled against the chosen position (that is, TOPS IV and TOPS MP positions should not have service profiles which include OSSAIN calls) should be corrected.
- OAIN203 - This log is generated when the control list (for a transfer) is not datafilled in table OACTLDEF. Table OACTLDEF should be datafilled.
- OAIN204 - This log is generated when a service node attempts to set a profile index not yet datafilled in table OATPRFIX. This log contains the profile index number. Table OATPRFIX should be datafilled.
- OAIN205 - This log is generated when an attempt is made to select a CT4Q assigned to receive OSSAIN processing with no corresponding entry in table OAINCTLA. Table OAINCTLA should be datafilled.
- OAIN206 - This log is generated when a post-auto, recall, or assistant refinement (table TQORDERA or TQORDERB) of a TOPS CT4Q results in an OSSAIN CT4Q.
- OAIN207 - This log is generated when an attempt is made to select a CT4Q assigned to receive OSSAIN preprocessing with no corresponding entry in table OAINPRE.
- OAIN300 - This log is generated at an OSAC remote when an unexpected message arrives during OSSAIN call processing (for example, loss of a voice connection due to network integrity failure).

OSSAIN 07 Enhancements (continued)

- OAIN301 - This log is generated at the standalone or OSAC remote when there are no OSSAIN recording units available. The message "OSSAIN Recording Unit Unavailable" is displayed with the log.

  This log is also generated at the OSAC host if there are no OSAC recording units available. The message "OSAC Recording Unit Unavailable" is displayed with the log.

- OAIN302 - This log is generated when a call is assigned an OSSAIN CT4Q but processing cannot continue due to the SOC option being set to IDLE. The call is routed to treatment when this log is generated.
- OAIN303 - This log is generated when a call floated trigger reassigns an OSSAIN Control list or Function that routes the call to an automated system, TOPS operator, or treatment.
- OAIN304 - This log is generated when OSSAIN trigger processing attempts to inform the service node of a trigger event, but fails to obtain a session with the service node.
- OAIN305 - This log is generated when a CT4Q that is eligible for OSSAIN preprocessing maps to a TOPS automated system or operator. Calls utilizing OSSAIN preprocessing can only map to functions provided by an OSSAIN service node.
- OAIN500 - This log is generated at OSAC and standalone switches whenever a session pool (switch-service node or host-remote) fails an out of service test.
- OAIN502 - This log is generated at OSAC and standalone switches whenever a session pool (switch-service node or host-remote) goes system busy due to either a failure to return to service or an audit fail.
- OAIN503 - This log is generated at OSAC and standalone switches whenever a session pool (switch-service node or host-remote) is placed in the offline state.
- OAIN504 - This log is generated at OSAC and standalone switches whenever a session pool (switch-service node or host-remote) is deleted from table OASESNPL.
- OAIN505 - This log is generated at OSAC and standalone switches whenever a session pool (switch-service node or host-remote) is placed in the MANB state.
- OAIN506 - This log is generated at OSAC and standalone switches whenever a session pool (switch-service node or host-remote) comes into service as a result of either a successful session pool audit or a manual action.

OSSAIN 07 Enhancements (continued)

- OAIN507 - This log is generated at OSAC and standalone switches whenever an inservice session pool (switch-service node or host-remote) goes c-side busy. This occurs when the node that supports the session pool is taken out of service.
- OAIN600 - This log is generated when the on-hook sanity timer expires. This timer is set to the value in table OAINPARM, parameter ON_HOOK_TIMER_DURATION.
- OAIN601 - This log is generated when the call sanity timer expires. This timer is set to the value in table OAINPARM, parameter CALL_SANITY_TIMER_DURATION. Also, this log is generated if the queue sanity timer expires. This timer clears calls that are hung up while queued for a service node session. The queue timer is set to 10 seconds rather than controlled by a parameter in table OAINPARM.
- OAIN602 - This log is generated at the standalone or OSAC host when a service node requests connection to a logical voice channel that the switch determines is already in use. The failure is reported to the node and then the node requests another logical voice channel.
- OAIN603 - This log is generated at the standalone or OSAC host when a service node requests a connection to a logical voice channel that is in the busy state. The switch reports the error to the service node so it can select a new voice channel.
- OAIN604 - This log is generated when a node attempts to transfer to an operator at any time other than initial call setup.
- OAIN605 - This log is generated when data communications receives a message with an OAP protocol version that is not optimal. The originating service node should be upgraded to a supported OAP protocol version as needed.
- OAIN606 - This log is generated when data communications cannot determine where to route a service node originated message.
- OAIN607 - This log is generated when an error is encountered by data communications while interfacing with the data transport software.
- OAIN608 - This log is generated whenever data communications message tracing has been enabled for the session pool or node specified by an incoming or outgoing call processing class message.
- OAIN609 - This log is generated whenever data communications message tracing has been enabled for the node specified by an incoming or outgoing node class message.
- OAIN610 - This log is generated whenever data communications message tracing has been enabled for the session pool or node specified by an incoming or outgoing session pool class message.

OSSAIN 07 Enhancements (continued)

- OAIN611 - This log is generated whenever data communications message tracing has been enabled and a message of undetermined format is processed.
- OAIN616 - This log is generated whenever data communications message tracing has been enabled for the node specified by an incoming OAP node log inform message.
- OAIN617 - This log is generated whenever data communications message tracing has been enabled for the session pool specified by an incoming OAP session pool alarm inform message.
- OAIN618 - This log is generated whenever data communications message tracing has been enabled for the session pool specified by an incoming OAP session pool log inform message.
- OAIN619 - This log is generated whenever data communications message tracing has been enabled for the session pool or node specified by an incoming or outgoing OSAC call processing class message.
- OAIN620 - This log is generated whenever data communications message tracing has been enabled for the node specified by an incoming or outgoing OSAC node class message.
- OAIN621 - This log is generated whenever data communications message tracing has been enabled for the node specified by an incoming or outgoing OSN node class message.
- OAIN622 - This log is generated whenever data communications message tracing has been enabled for the session pool specified by an incoming or outgoing OSAC session pool class message.
- OAIN623 - This log is generated whenever data communications message tracing has been enabled for the node specified by an incoming OAP node alarm inform message.
- OAIN700 - This log is generated whenever an OSSAIN maintained service node requests that the DMS switch generate a log.
- OAIN701 - This log report is generated whenever an OSSAIN session pool requests that the DMS switch generate a log.
- OAP600 - This log is generated at the standalone or OSAC host or OSAC remote when an invalid value is received in an OAP message or when an invalid message is received for the receiving application.
- OAP601 - This log is generated at the standalone or OSAC host or OSAC remote when an unrecognized operation is requested.
- OAP602 - This log is generated at the standalone or OSAC host or OSAC remote when an unrecognized data block is received with an operation or when an expected data block for an operation is missing.

OSSAIN 07 Enhancements (continued)

- OAP603 - This log is generated at the standalone or OSAC host or OSAC remote when a reject response is received.
- OSAC200 - Bad OAFUNDEF Datafill. This log is generated at the OSAC host if the function number sent from the OSAC remote is not datafilled in table OAFUNDEF or is not datafilled as an OSSAIN function.
- OSAC201 - This log is generated at the OSAC remote when it receives an invalid session pool id or session id from the OSAC host. The session pool id may be either not datafilled in table OASESNPL or not datafilled as a subscriber origination session pool. The session id may exceed the max sessions datafilled in Table OASESNPL.

  This log is also generated at the OSAC host when it receives a session verification for a session pool not datafilled or not datafilled as a SN initiation session pool.
- OSAC202 - This log is generated at the OSAC remote when it receives an error response from the host indicating there was a function datafill mismatch between the host and remote.
- OSAC203 - This log is generated at the OSAC host when it receives a voice connect request from the OSAC remote with missing datafill in table OSCVLGRP.
- OSAC204 - This log is generated at the OSAC host when it receives a voice connect request but OSAC datafill is missing from table OAVLMAP.
- OSAC300 - This log is generated at the OSAC host or OSAC remote if it receives an unexpected message.
- OSAC600 - This log is generated at the OSAC host if it needs to take a call down for any reason.
- OSAC601 - This log is generated at the OSAC host and OSAC remote if a parallel datafill check fails. Parallel datafill is checked during RTS, audit, and tests of OSAC nodes and session pools. Parallel datafill checks are also performed during RTS, audit, and tests of OSN nodes and session pools.
- PM100 - This log is generated at OSAC and standalone switches when an out of service test has failed on a node (OSAC, OSN, or OSNM).
- PM102 - This log is generated at OSAC and standalone switches when a node (OSNM, OSN, or OSAC) goes system busy.
- PM103 - This log is generated at OSAC and standalone switches when a node (OSNM, OSN, or OSAC) is taken offline.
- PM104 - This log is generated at OSAC and standalone switches whenever a node is deleted from table OANODINV. This indicates a node is unequipped.

OSSAIN 07 Enhancements (continued)

- PM105 - This log is generated at OSAC and standalone switches when a node (OSNM, OSN, or OSAC) is placed in the manual busy state from either the INSV, ISTB, SYSB, or OFFL state.
- PM106 - This log is generated at OSAC and standalone switches when a node (OSNM, OSN, or OSAC) is returned to service by either a successful node audit or manual action.
- PM1028 - This log is produced at OSAC and standalone switches anytime a node (OSNM or OSAC) comes into service but is in service trouble (ISTB). This occurs if one or more of the session pools supported by the node is not in the OFFL or INSV state. Not applicable to OSN nodes.
- TCCI100-102 - These logs indicate DAS protocol errors.

An OSAC configuration only uses the following logs:

- PM: 100, 102, 103, 105, 106, and 128 (also used by the standalone)
- OAIN: 201, 300, 301, 602, 603, 500, 502—507, and 605—611 (also used by the standalone)
- OAP: 600-603 (also used by the standalone)
- OSAC: 200, 201, and 600 (used only by OSAC)
- TCCI100-102

OMs

For TOPS07, the following OMs are created or changed:

- OSACCP1, OSACCP2, OSACND, OSACSP, OSNND, OAPCALP6, OAINRTE, OAPNMT2, OAPSPMT2, and OSNSP are created.
- OAPCALP5 has new registers RESUME, RESUMES, RESUMEE, CONVTM, CONVTMS, and CONVTME.
- EXT tuple OSAC_HOST_EXT_FC is added to the key type.
- OAINNODE is added.
- OAPNMTC registers NDLOG and NDALARM are added.
- OAPSPMTC registers SPLOG, SPCH, SPALARM, and SPDRAIN are added.
- OASCNDCP has new call processing registers for OSAC
- AABSHAND has many new registers.

OSSAIN 07 Enhancements (continued)

The OMs for standalone and OSAC are the following:

- AABSHAND - This group is modified with new registers for OSSAIN/operator handoffs.
- EXT - OSSAIN RU extension block is added. Also, tuple OSAC_HOST_EXT_FC is added to the key type.
- OADATCOM - This new OM record data communication events for OSSAIN
- OAFLTRIG - This new OM provides peg counts for actions related to OSSAIN float trigger processing. These measurements cover float trigger processing causing call control to transfer to an OSSAIN function or control list.
- OAINNODE - This new group pegs state changes for all OSSAIN nodes (OSNM, OSN, and OSAC).
- OAINQMS - This new OM provides peg counts for OSSAIN calls on a queue basis. It provides counts for calls that request an OSSAIN session from the QMS CAM and also counts on the action taken by the CAM in response to the request.
- OAINRTE - This new OM records the number of times a session is requested from a session pool for host-remote sessions or trigger event informs. These requests do not use the QMS CAM.
- OANODEDC - This new OM record data communication events per OSSAIN nodes
- OAPCALP1-OAPCALP6 - These new OMs record the number of times each incoming and outgoing call processing operation and response is used on a per session pool basis.
- OAPMERRN - This new OM records the number of times a specific error occurs in node maintenance messages on a per node basis.
- OAPMERRS - This new OM records the number of times a specific error occurs in call processing and session pool maintenance messages on a session pool basis.
- OAPMTYPN - This new OM records the number of times each node maintenance message type is used on a node basis.
- OAPMTYPS - This new OM records the number of times each call processing and session pool maintenance message type is used on a session pool basis.
- OAPNMT2 - This new OM records maintenance data for service nodes.

OSSAIN 07 Enhancements (continued)

- OAPNMTC - This new OM records each OAP call processing operation and response on a per session pool basis. This group is pegged each time the switch sends or receives an OAP call processing message.
- OAPSPMT2 - This new OM records maintenance data for session pools.
- OAPSPMTC - This new OM records the number of times each incoming and outgoing session pool maintenance operation and response is used on a session pool basis.
- OASNPLDC - This OM records data communications events for an OSSAIN session pool
- OASVNDCP - This OM provides peg counts for OSSAIN calls on a session pool basis. It provides counts for all service node call processing activities.
- OSACCP1 - This counts each OSAC call processing operation and response on a per session pool basis. This group is pegged each time the switch sends or receives an OSAC call processing message.
- OSACCP2 - This OM pegs a register for each OSAC call processing operation and response on a per session pool basis. This group is pegged each time the switch sends or receives an OSAC call processing message.
- OSACND - This OM pegs a register for each OSAC node class operation and response on a per node basis. This group is pegged each time the switch sends or receives an OSAC node class message.
- OSACNDCP - This existing OM pegs counts for OSSAIN call on a per session pool basis. It provides counts for all service nodes or OSAC call processing activities. New registers OSCCLERR and OSCMICL are added.
- OSACSP - This OM pegs a register for each OSAC session pool operation and response on a per session pool basis. This group is pegged each time the switch sends or receives an OSAC session pool class message.
- OSNND - This OM pegs a register for each OSN node class operation and response on a per node basis. This group is pegged each time the switch sends or receives an OSN Node Class message.
- OSNSP - This OM pegs a register for each OSN session pool class operation and response on a per session pool basis. This group is pegged each time the switch sends or receives an OSN Session Pool Class message.
- TOPPACT3 - New ActIDs and registers are added for OSSAIN.

- TOPPDID5 - New DIDs and registers are added for OSSAIN.
- TOPSDA - When a successful transfer from DA to OSSAIN occurs, a new DA Call OM field is pegged directly prior to the transition to OSSAIN. If the transfer to OSSAIN fails a new DA Call OM field is pegged just prior to sending a CALL_STATUS message to the DA system. It is possible therefore to have two separate OM fields pegged for the same call.

Translations table flow

The OSSAIN 07 Enhancements translations tables are described in the following list:

- Table LIUINV provides link interface inventory for EIUs.
- Table IPNETWRK defines IP information for EIUs.
- Table IPROUTER provides IP routing information for EIUs.
- Table IPTHRON defines IP throttling numbers for EIUs.
- Table ENTYPES defines node types.
- Table ENSITES defines node sites.
- Table OANODNAM defines node ids and names.
- Table OANODINV defines OSSAIN node information.
- Table CT4QNAMS selects OSSAIN or operator processing.
- Table QAPLNDEF sets call and agent queue limits.
- Table OQCQPROF defines OSSAIN agent and call queue profiles.
- Table OASESNPL defines session pools (OSSAIN operator teams) for OSSAIN.
- Table CLLI defines service node and host-remote voice links.
- Table TRKGRP defines service node and host-remote voice links.
- Table TRKSGRP defines service node and host-remote voice links.
- Table TRKMEM defines service node and host-remote voice links.
- Table OAVLMAP defines voice links between the switch and service nodes and between the host and remotes.
- Table OAFUNDEF lists OSSAIN functions (services) and the provider.
- Table OACTLDEF contains control lists (sequentially performed OSSAIN services). Currently limited to a list of one service.
- Table DNSCRN receives directory numbers to index into table TOPSDB for blocking functions in control list based on directory (DN).

OSSAIN 07 Enhancements (continued)

- Table TOPSDB is indexed from table DNSCRN for index into table OAFUNBLK for blocking functions in control list based on DN.
- Table OAFUNBLK blocks functions defined in table OAFUNDEF, based on DN.
- Table OAFNDISP determines handling of call deflection or overflow, blocked functions, or failure to send a session begin.
- Table OADTFPRF selects services by DTMF digits.
- Table OACAUPRF selects services by ISUP class and cause codes.
- Table OADSCPRF selects services by types of events during post disconnect.
- Table OATLKPRF selects services by types of events during the talking portion of a call.
- Table OACNNNPRF selects services by types of events during call connect.
- Table OATPRFIX provides indices into tables OACNNPRF, OATLKPRF, and OADSCPRF.
- Table OAINCTLA selects trigger profiles and control lists for CT4Qs marked for OSSAIN service nodes. The table contains an optional index into table OATPRFIX.
- Table OAINPARM provides controls for various OSSAIN operations.
- Table OSCVLGRP defines voice link groups between a host and remotes.

The OSSAIN 07 Enhancements translation process is shown in the flowchart that follows.

OSSAIN 07 Enhancements (continued)

Table flow for OSSAIN 07 Enhancements

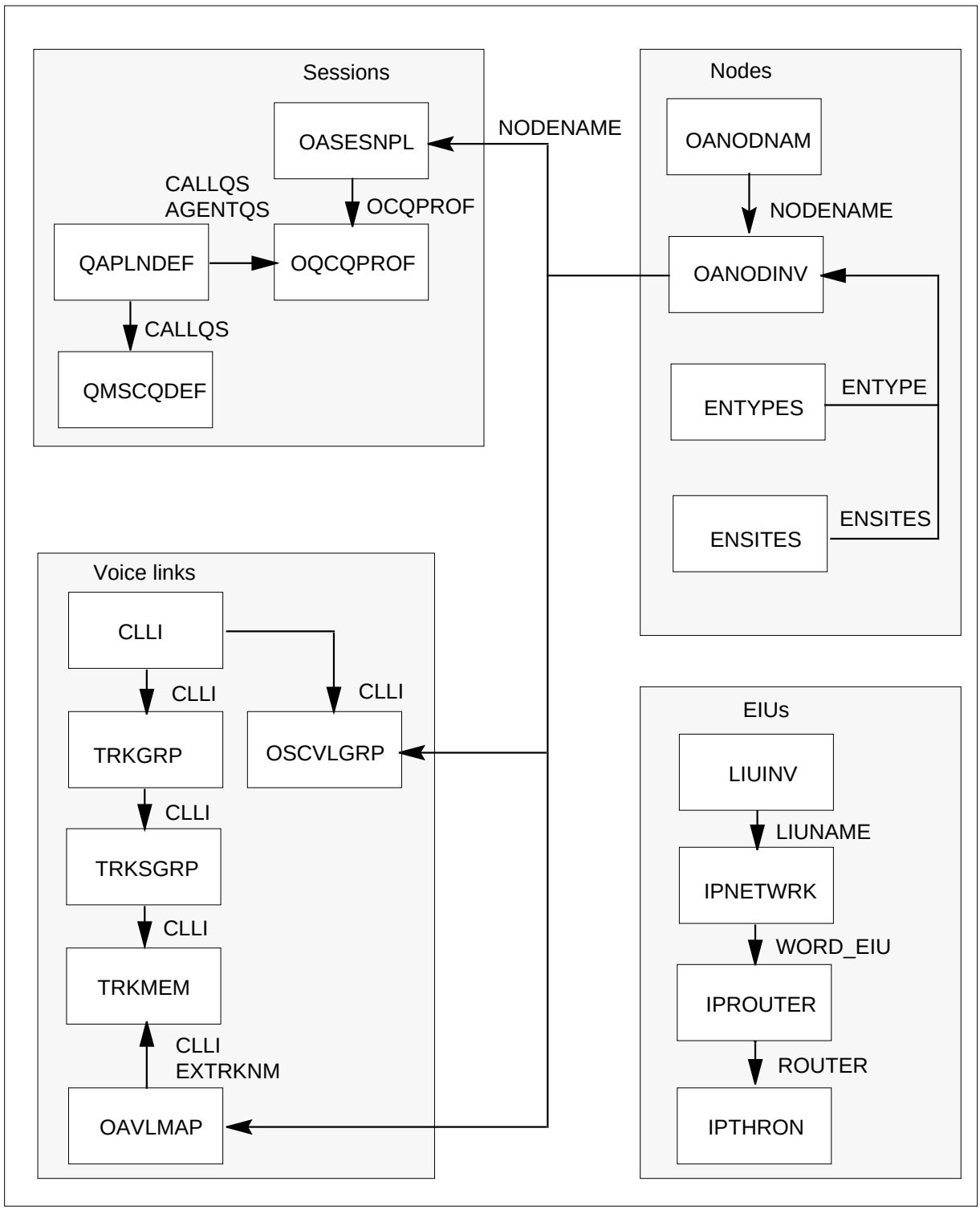

OSSAIN 07 Enhancements (continued)

Table flow for OSSAIN 07 Enhancements (continued)

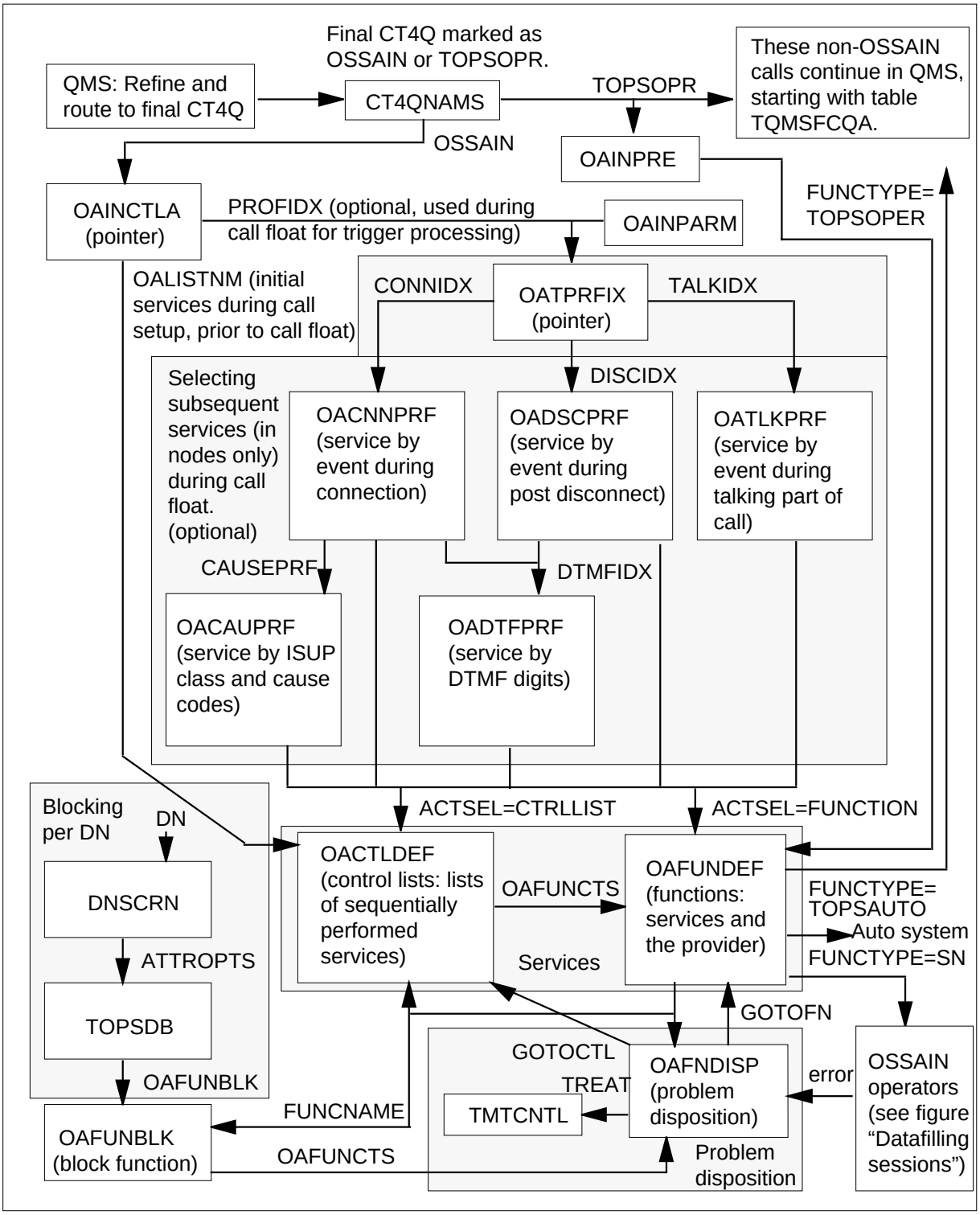

OSSAIN 07 Enhancements (continued)

The following table lists the datafill content used in the flowchart.

Datafill example for OSSAIN 07 Enhancements

Datafill table	Example data
ENTYPES	SWITCH
ENSITES	SWITCH_SITEB
OANODNAM	0 REMOTE1
OANODINV	REMOTE1 OSAC OTHER 0 UDP IPV4 47 187 01 01 SWITCH 2 B 11 SWITCH_SITEB DURHAM_1
LIUINV	EIU 0 LIM 0 1 12 ETC35nn NTEX22BB NT9X84AA NT9X85AA NO 000075F00000
IPNETWRK	0 47 245 9 1 16 (EIU 0)$ (SCRNFLAG Y)$
IPROUTER	0 EIU 47 245 9 2 47 245 0 21 YES YES
IPTHRON	EIU 0 10 40 CM 25$
CT4QNAMS	2 0+YELLOW N OSSAIN
OASESNPL	1 BRAND1_H 10 BRAND_01 SUBSCRIBER SH USEDEFLT USEDEFLT N 9 UDP 7002 7003
OQCQPROF	0 AQ0 OFC (CQ0)$
CLLI	OSSAINVL1 258 24 OSSAIN_VOICE_LINK_1
	OSACVL1 300 20 OSAC_VOICE_LINK_1
TRKGRP	OSSAINVL1 TOPSVL 31 NPDGP NCRT MIDL OG
	OSACVL1 TOPSVL 31 NPDGP NCRT MIDL OG
TRKSGRP	OSSAINVL1 0 DS1SIG STD OG NP IM 0 0 NO NO N N Y 70
	OSACVL1 0 DS1SIG STD OG NP IM 0 0 NO NO N N Y 70
TRKMEM	OSSAINVL1 2 0 DCM 0 0 21
	OSACVL1 1 0 DCM 0 0 22
OSCVLGRP	REMOTE1 OSACVL1
OAVLMAP	NODE_1 10 OSSAINVL1 2
	REMOTE1 1 OSACVL1 1

OSSAIN 07 Enhancements (continued)

Datafill example for OSSAIN 07 Enhancements

Datafill table	Example data
OAINCTLA	0+YELLOW 0+YEL Y 7
OAINPARM	OPR_TRIGGER_PROFILE_INDEX Y 7
OATPRFIX	7 Y 4 Y 2 Y 6
OACNNPRF	4 (NOANS F ROUTE_NODE) $ Y 8 Y 3
OATLKPRF	2 (FLASH N N N Y FUNCTION TOLL_OPER) (NTFY Y N N N FUNCTION NEW_ACTS) $ N N Y
OADSCPRF	6 (PTYD FUNCTION ROUTE_NODE)$ Y
OADTFPRF	8 (0 N N FUNCTION TOLL_OPR) (STAR N N FUNCTION MDS_NODE)$ Y
OACAUPRF	3 (NORM 17 FUNCTION NDS_NODE)$
OACTLDEF	0 0+YEL 3 YELLOW_PAGES
OAFUNDEF	YELLOW_PAGES OSSAIN Y CQ0
OAFNDISP	YELLOW_PAGES TREAT VACT GOTOFN YELPGS_OPER GOTOCTL CTLLIST3 TREAT VACT
DNSCRN	6193229801 TOPSDB 1
TOPSDB	1 0 0 0 0 1
OAFUNBLK	1 INCLUDE BRANDING NODE_AABS YELLOW_PAGES$

Limitations and restrictions

The following limitations and restrictions apply to OSSAIN 07 Enhancements :

Call float (unchanged from OSSAIN, ENSV0014)

The DMS switch performs call floated trigger processing[1]* for OSSAIN calls in the call floated state. The following restrictions/limitations apply for calls in the floated state:

- Call floated trigger datafill and processing cannot be used to route the call to an operator, TOPS automated system (that is, ACTS, MCCS or AABS), or treatment as a blocked OSSAIN function. An OAIN303 log is produced

[1] * Call floated trigger processing is performed according to the OSSAIN trigger datafill tables. This includes tables OAINCTLA, OATPRFIX, OADSCPRF, OATLKPRF, OACN-NPRF, OADTFPRF, and OACAUPRF.

if one of these conditions is encountered during call floated trigger processing. Note, table OAINPARM is used to route calls floated after MCCS or AABS to OSSAIN.

- If a call is floated prior to reaching the last function in a control list, the remaining functions in that control list are not processed. Subsequent OSSAIN processing can only be initiated by a call floated trigger event.
- If a trigger is hit while outpulsing to a forward connection (for example, calling party keys a DTMF digit), the forward connection is released. This prevents calls from arriving at a node in a partially connected state. The forward DN is part of the call context so the service node has the ability to establish the forward connection when it has control of the call.

Calls floated by ACTS do not receive OSSAIN trigger processing. This restriction is necessary due to possible coin recalls during the talking and disconnect points in a call.

A hookswitch flash event from a subscriber may not always be propagated to the TOPS DMS switch for trigger processing due to the custom calling feature environment available in the network.

Datafill (first 3 items are changed from OSSAIN, ENSV0014)

A maximum of 256 nodes can be datafilled per OSSAIN PM type (OSNM, OSAC, and OSN).

In table TRKGRP, a TOPSVL trunk must have a selection sequence of most idle (MIDL), even though OSSAIN ignores this since the service node selects the voice link. For an OSAC host, the direction must be OG (to OSAC remotes and SNs). For an OSAC remote, the direction must be IC (from the OSAC host).

In table TRKSGRP for TOPSVL trunks, the direction must match the direction in table TRKGPR, and have an outpulsing type of no pulse (NP), an immediate start signal (IM), and set Remote Make Busy (RMB) to Y.

There are restrictions for datafilling table OANODINV. Refer to the datafill procedure section of this document for details of those restrictions.

The maximum number of functions that can be datafilled in table OAFUNDEF is 1022.

The maximum number of session pools that can be datafilled in table OASESNPL is 4094. The maximum number of session pools that can be datafilled per node is 256.

OSSAIN 07 Enhancements (continued)

The maximum number of control lists that can be datafilled in table OACTLDEF is 4095. Currently, each control list can consist of only 1 function in field OAFUNCTS, which must first be datafilled in table OAFUNDEF.

The maximum number of indices which can be datafilled in table OAFUNBLK is 1K. Each index specifies a list of 0 to 5 functions to be excluded or included for that index (which is obtained from a DN). `Excluded' means that all functions in table OAFUNDEF are allowed except for the datafilled ones. `Included' means that only the functions listed are valid for that index.

The service from the ORIGSERV field in table OAFUNDEF is not applied to calls originated by the service node and the service is not applied to calls transferred by the service node or operator.

The No Charge (NC) field, in tables TDBCLASS and SPLDNID, is currently not processed by OSSAIN.

No Charge, in tables TDBCLASS and SPLDNID, is an option by Directory Number that can be set for hotel calls. When No Charge is set to N, the room number is only required for the call if the call is to be billed to the calling station (that is, the room phone). When No Charge is set to Y, the room number is required regardless of how the call is to be billed, in which case the hotel is likely to be charging the user an access fee for using the phone.

In table OAFUNDEF, field AUTOSYS, only value AABS is supported. Values ACTS, ACCS, and BRANDING are not supported.

IP port addresses are entered in tables OANODINV and OASESNPL. OSSAIN only support port addresses between 1024 and 32,767. Port numbers 0 to 1023 are reserved for well known applications such as Telnet and NFS. DMS table control restrictions limits the upper bound of port numbers to 32,767.

Transfers (unchanged from OSSAIN, ENSV0014)

If a call recalls to a service node as the result of a trigger or if a called party is connected, the service node should not transfer this call to an operator. If the service node attempts this transfer, the called party is released and an AMA record is automatically generated along with an OAIN604 log. Alternatively, the node can request a `GEN AMA' to complete billing for the call, and then transfer to an operator.

Calls cannot be transferred to the LATA Equal Access System (LEAS).

Calls transferred to an interLATA carrier are not eligible for OSSAIN trigger processing.

For calls transferred between TOPS MP positions and OSSAIN:

- Transition from the TOPS MP to the SN do not have context information passed from the TOPS MP terminal.
- Calls that transition to a TOPS MP position do not have Context Block or Custom AMA information passed to the position.

  Although a TOPS MP has the above limitations, the MPs can still be utilized for operator backup.

Transitions to AABS (similar to current AABS Handoff) require the following conditions:

- The incoming facility is configured to allow AABS.
- The calling number is present.
- The called number is present.
- The billing method is established.
- The billed number passes validation checks.
- Equal access checks must pass.
- Room number is obtained for hotels that require a room number.
- The call must not be marked as DA or Intercept.
- The billed number is not an overseas number.
- The call must not be marked for notify.

When a call with both originating and terminating parties is routed to treatment, the terminating party is released. Only the originating party receives the treatment.

The following conditions must exist for an operator to transfer a call to an OSSAIN control list:

- The service type is TA.
- The type of automatic call distribution (ACD) is QMS.
- The call origination type (table TOPS) is in the following set:

  unspec, oh, ao, dd, delay, 555, ts, tsub, 211, 311, 411, 511, 611, 711, 811, 911, 999, hom555, for555, spare1, spare2, spare3, spare4, spare5, ints
- The class charge is one of the following:

OSSAIN 07 Enhancements (continued)

unspecified, person paid, person collect, person special calling, person special called, station paid, station collect, station special calling, station special called, auto collect

- The equal access route status must indicate that operator services should be provided for this call.
- AMA verification is not in progress (no validation query outstanding).
- The call cannot be one of the following types:

  billed coin, billed hotel, notify, time and charges, DA, or intercept
- If a class charge is entered, a billing number must also be entered. Then, the operator must either enter the billing number or remove the class charge for the transfer to succeed.
- If a 4 digit pin is entered in the Special number field, a called number must also be present. Then, the operator must either enter the called number or remove the special number for the transfer to succeed.

For calls transferred from directory assistance to OSSAIN:

- The size of the context information is fixed and limited by the Nortel Standard DA Protocol.
- This capability is not supported for the IBM-DA Protocol.
- Context information that is being transferred, must be compatible between the nodes and terminals involved in processing the information. Context information is about the service to be passed from DA to the node.
- If OSSAIN is not enabled by SOC, the Transfer With Context message is rejected by means of a Call Status message indicating an `Invalid Service'.
- Attempts to redirect calls from coin or hotel station calls from DA to OSSAIN cause the DMS switch to close out pending AMA associated with directory assistance, and changes the call to TA. The DMS switch changes the class charge to unspecified, and forces the call to be sent-paid restricted billing, prior to transferring to the OSSAIN service node.
- This capability should not be used in conjunction with intercept call completion scenarios.

The service node cannot transfer DA calls to a toll and assist operator.

ADACC calls requiring alternate billing by an OSSAIN service node must be sent to a service node by an OSSAIN control list. Routing an ADACC call to an operator by a control list is disallowed, and if this occurs, the call is re-routed to an existing AABS node, if available.

OSSAIN 07 Enhancements (continued)

Supported capabilities (unchanged from OSSAIN, ENSV0014)

OPP-compatible and TOPS MP positions are supported. TOPS IV positions are not supported for OSSAIN calls transferred from the service node to an operator. If an OSSAIN call is routed to a TOP IV position, the call is rerouted to treatment. However, a TOPS IV position can still receive 0- traffic which can then be directed to an OSSAIN control list.

R2 signaling is not supported. Refer to functionality R2 on TOPS, GOS00001.

Outgoing OP trunks are not supported. Refer to functionality TOPS E911, OSB00001.

Enhanced 800 is not supported. Refer to feature AL0249, 800+ Capability for Bell Canada.

The OPP compatible position may only provide a maximum of 62 charge adjust services unless a Gen AMA function is used before the limit is reached.

OAP currently does not support hotel room number collection, and thus OSSAIN cannot support the above functionality. If any hotel calls on a given trunk group require a room number, all hotel calls on that trunk group must be routed to existing TOPS (non-OSSAIN) functionality. Note that this likely involves the use of QMS refinements.

Billing (unchanged from OSSAIN, ENSV0014)

The size of an AMA record is limited to 2K bytes. This includes the size of the structure and all appended modules. To ensure the 2K limit is not exceeded, this functionality enforces an 800 byte limit on the total number of bytes the Service Node Formatted modules can take up. A counter in the switch tabulates the storage used by the Service Node Formatted modules. For each Service Node Formatted - Small module appended, the counter is incremented by 26 bytes. And, the counter is incremented by 76 bytes for each Service Node Formatted - Large module appended. If processing an Append AMA Module request would result in the counter overrunning the 800 byte limit, the request is not performed and the switch returns an error response.

Only the following call codes are supported: 190, 191, 192, 193, 196 and 197.

OSAC (new)

Up to 256 each of OSAC, OSN, and OSNM nodes can be datafilled in table OANODINV.

Although the valid range IP port numbers is from 0 to 65,535, OSSAIN only supports port addresses between 1024 and 32,767. Port numbers 0 to 1023 are

OSSAIN 07 Enhancements (continued)

reserved for well known applications such as Telnet and NFS. DMS table control restrictions limits the upper bound of port numbers to 32,767.

In the initial release of OSSAIN, only 20 session pools could be datafilled per node. This functionality increases the number of session pools that can be datafilled per node to 256.

SOC codes ENSV0014 (OSSAIN) and ENSV0020 (OSSAIN Enhancements), must be set to ON for this functionality to operate. Also, ENSV0020 cannot be ON unless ENSV0014 is ON.

Decreasing the number of available sessions in table OASESNPL does not immediately decrease the number of cals at a session pool. It only decreases the number of sessions that are available for new calls, thereby eventually decreasing the total number of calls only after all sessions that are unavailable for receiving new calls are freed from current use.

In an OSAC environment, position numbers (defined in table TOPSPOS) must be distinct (not the same) across the network. That is, position numbers must be unique within an office and between nodes (host and remotes).

OSSAIN preprocessing (new)

Calls must map only to functions provided by an SN. If the translation results in a function type (field FUNCTYPE in table OAFUNDEF) of either TOPSOPER or TOPSAUTO, the call is not allowed to enter OSSAIN preprocessing. An OAIN305 log is generated and the call continues to an operator or automated system.

Calls are limited to one OSSAIN preprocessing session. The only exception to this rule is for an automated directory assistance call completion (ADACC) call. ADACC calls are allowed one interaction during each of the DA and Toll portions of the call.

If the SN indicates by OAP messaging that it has provided a branding function during a session, the call is no longer eligible for switch branding, except in the case of ADACC. The rule for ADACC is one branding function for each part of the call, provided by either the switch or SN.

Calls that receive switch branding at the PREOPR refinement stage are still eligible for an SN preprocessing session at the POSTAUTO refinement point. The SN is notified that the call has been branded and it is up to the SN to ensure that the call is not branded again, unless necessary.

If no branding function is provided by the SN during an OSSAIN preprocessing session, switch branding cannot be performed when the call

resumes; however, if the call reaches another queue refinement stage, such as POSTAUTO, the call is eligible for switch branding.

Switch branding is still not allowed for calls using standard OSSAIN. This has not been changed by this capability.

An SN must notify the switch if the SN has provided a branding function. This information is necessary in order for the switch to properly display the branding status of a call at an operator position. This applies to both standard and preprocessed OSSAIN calls.

Preprocessing is not allowed at the RECALL or ASST QMS refinement stages.

Simultaneous Interactions are not allowed during an OSSAIN preprocessing session.

Preprocessing is not supported for POSTAUTO-refined ADAS or ADASPLUS calls. This limitation only applies to calls that are successfully handled by the ADAS or ADASPLUS system. These calls are still connected to voice recording and processing equipment, waiting to play back the subscriber's requested city and listing to an operator. A call in this condition will not be interrupted with an OSSAIN preprocessing session. Calls considered unsuccessful at recording the city and the listing and needing an operator are allowed preprocessing. Also, calls are eligible to receive preprocessing prior to connecting to the ADAS or ADASPLUS systems.

Preprocessing is not allowed on intercept or delay call origination types.

If the SN attempts to resume an OSSAIN preprocessing call with no parties attached, the call is terminated by the switch.

Disposition routing using table OAFNDISP does not take place for OSSAIN preprocessing. This applies to all dispositions (deflections, overflow, function blocking and origination failures). Calls that are unable to obtain a session immediately, or queue for a session, bypass preprocessing and continue to either a TOPS operator or automated system.

Authcode calls are eligible for OSSAIN preprocessing. MCCS is the operator type for authcode calls. In order for these calls to receive preprocessing, the CT4Q must have MCCS in the OPRSYS field of table CT4QNAMS.

OSSAIN preprocessing is not supported on RONI trunk group types. Valid trunk group types are TOPS, Intertoll and ATC.

OSSAIN 07 Enhancements (continued)

Operator handoff

If an operator successfully marks a call for handoff to an automated system for billing verification (whether AABS or an OSSAIN service node) AND the operator marks the call for transfer (either to another operator or to OSSAIN service node) by an OGT keying action, the handoff takes priority. In this case, the OGT keying action is essentially ignored.

Simultaneous interaction

TOPS MP operator positions are unable to send or receive pass-through messages, since the pass-through functionality relies on the OPP protocol for pass-through messaging to/from an operator.

Since the operator is not allowed to be the active agent, a simultaneous interaction can not be initiated by the operator.

At most, two agents may be connected to the call at one time. Thus, if a service node and operator are already involved in a simultaneous interaction, the operator is not allowed to bring in other agents by requesting assistance from SA, IC, or CSE operators. If assistance is required, the service node must be released before making the request.

The operator does not receive screen updates, except for calling and called hook status changes, while in a simultaneous interaction.

The operator is unable to split the calling/called voice path during a simultaneous interaction due to the reduced capability set of the passive providers in a simultaneous interaction.

If a service node attempts to attach a centralized operator, the host switch for this operator must be at a TOP07 (or above) level.

Interactions

The following paragraphs describe the interactions between OSSAIN 07 Enhancements and other functionalities.

This functionality uses functionality OSSAIN, ENSV0014.

General (unchanged from OSSAIN, ENSV0014)

This functionality uses the QMS call and agent manager (CAM) to achieve its functionality. A new QMS application is created for OSSAIN with its own set of call and agent queues. This interaction does not adversely affect the existing TOPS QMS functionality.

The service node must send a Generate AMA Record request to generate a billing record when performing multiple instances of the same service. Then the DMS switch generates an AMA record at call termination and at the end of call completion. Therefore, for single service calls or for the last service performed in a call, where multiple services are performed, the service node does not need to perform a Generate AMA Record request.

The existing TOPS EBAF Phase 2 capabilities are extended but not changed.

For transfers from the service node to an interLATA carrier, there is interaction with the TOPS InterLATA Carrier System (TICS), functionality TOPS InterLATA Carrier (OSEA0101).

DA to OSSAIN transfers (unchanged from OSSAIN, ENSV0014)

Directory Assistance interacts with OSSAIN using the Nortel Standard DA Protocol.

A possible example of the usage of this new generic capability is the Non-Published Automated Message Delivery service (NPAMD).

Call float interactions with a service node (unchanged from OSSAIN, ENSV0014)

The Service Node can float the call under one of the following conditions:

- prior to connecting to the forward party
- after connecting to the forward party, but prior to answer
- once the parties are connected and talking

Call float interactions with an operator (unchanged from OSSAIN, ENSV0014)

The Operator has two options when attempting to float a call.

- The operator can either connect the parties prior to the float operation or
- The operator can connect the parties as part of the float operation.

If the operator performs option one and connects the parties prior to float, the DMS switch starts trigger processing when the parties are in the talking state following the reception of answer from both the terminating party and call float from the operator. No attempt is made to deny the float request from an operator prior to answer.

If the operator performs option two and connects the parties as part of the float operation, the DMS switch immediately starts trigger processing as part of the float request.

OSSAIN 07 Enhancements (continued)

Operator keyed notifications take precedence over the float trigger notification timer. Similarly, time and charge notifications at disconnect take precedence over the disconnect trigger events.

TOPS_BRAND_DISPLAY (new)

TOPS_BRAND_DISPLAY, an existing parameter in table OFCENG, determines how information regarding the branding status of a call is displayed at an operator position for OSSAIN as well as TOPS calls.

Gen AMA and call timing information (new)

When a Gen AMA is performed as part of switch trigger datafill and processing (for example, a sequence call) a new call is effectively started and presented to the SN with no applicable call timing information. Therefore, if the SN needs to know the call timing information for the call just prior to a trigger event, the `Gen AMA' option should not be datafilled against that trigger event.

Simultaneous interactions (new)

Simultaneous interactions interworks fully with both Operator Centralization and OSSAIN Centralization. That is, a simultaneous interaction may take place with both a centralized operator and a centralized service node (or some combination of centralized and non-centralized agents).

Activation/deactivation by the end user

OSSAIN 07 Enhancements requires no activation or deactivation by the end user.

Billing

General (unchanged from OSSAIN, ENSV0014)

For directory assistance calls transferred to OSSAIN, AMA billing is closed out after completion of DA and then the call is reclassified as Toll and Assist prior to transfer to OSSAIN. If there are any restrictions to the calling party, such as a coin or hotel origination, the DMS switch changes the class charge to unspecified, and forces the call to sent-paid restricted billing.

TOPS and OPP-compatible positions can append custom billing modules to the AMA record in the DMS. TOPS uses Expanded Bellcore AMA Format (EBAF) for its AMA recording. And, EBAF phase two is used which makes use of the latest Bellcore defined structure codes, call codes and module codes.

As with operator handled calls, the service node (SN) can mark a call as NO AMA. This allows calls or portions of calls to be marked as not billable in the AMA record generated by the DMS switch. Once a call is marked as NO

AMA by a SN or operator, the call remains in this state until the SN or operator marks the call as requiring billing.

OSAC (new)

OSAC calls are billed at the remote, not at the host. The call ID used at the OSAC host is obtained from the OSAC remote. It is the same callid used at the OSAC remote for the call. There are no AMA records produced at the OSAC host for the call. All billing for the call is done at the OSAC remote.

TOPS07 (new)

For release TOPS07, the following changes are made:

- SN handled calls can be marked as NO AMA.
- Prepaid calling cards are stored in AMA module 052.

  Prepaid calling card numbers are stored in AMA Module 052 - Alternate Billing Service. This is the same AMA module used to record standard calling cards as well as custom billing card numbers.
- Upon completion of a call which has received simultaneous interaction processing, the AMA record has module code 184 attached for each service node which had been attached. Each module code reflects the elapsed time involved for an individual service node.

Structure codes (unchanged from OSSAIN, ENSV0014)

OSSAIN calls uses the following existing TOPS structure codes:

- 0751 - Used for calls originating on an intertoll (IT) or Access Tandem to Carrier (ATC) trunk from a corporate entity utilizing the North American dialing plan.
- 0752 - Used for calls originating on a Remote Operator Number Identification (RONI) trunk or TOPS trunk directly from an end office utilizing the North American dialing plan.
- 0106 - Used for Open Numbering Plan Environment (ONPE) calls originating from a subscriber. Calls arrive on TOPS trunks.
- 0107 - Used for Open Numbering Plan Environment calls that do not originate from a subscriber. Calls arrive on IT trunks.

OSSAIN 07 Enhancements (continued)

Call codes (unchanged from OSSAIN, ENSV0014)

OSSAIN calls use the existing set of TOPS call codes as follows. (Though currently, only call codes 189, 190, 191, 192, 193, 196 and 197 are supported.)

- Call Code 189 - Originating with credit recording service. Also, OSSAIN now allows AMA module codes 186 and 187 to be appended to the AMA record with call code 189.
- Call Code 190 - Originating with carrier identification processing, but no service processing.
- Call Code 191 - Terminating with carrier identification, but no service processing.
- Call Code 192 - Originating with call completion service.
- Call Code 193 - Terminating with call completion service.
- Call Code 194 - Originating with listing services service.
- Call Code 195 - Terminating with listing services service.
- Call Code 196 - Originating with general assistance service.
- Call Code 197 - Terminating with general assistance service.
- Call Code 198 - Originating with busy line verification service.
- Call Code 199 - Terminating with busy line verification service.
- Call Code 215 - Intercept service.

Module codes (unchanged from OSSAIN, ENSV0014)

The existing TOPS module codes are used along with the following new module codes:

- Module 184 - Service Node ID
- Module 185 - Service ID
- Module 186 - Service Node Formatted - Small
- Module 187 - Service Node Formatted - Large

Module code 184 - Service node ID

This module records information on a service node and is replicative. This module is appended for each service node involved in a call. The maximum number of service nodes allowed in a call can be determined by the

MAX_ALLOWED_TRANSITIONS parameter in table OAINPARM. Following is the information in the module:

Module code 184

Information	Field number	Number of characters
Module code	88	4
Service node ID	105	6
Sequence number	140	6
Service provider elapsed time	403	6
Transactions	130	6

Following is a description of the information:

- Service node ID - This value is datafilled in table OANODINV.
- Sequence number - The sequence when the service node is brought into the call.
- Service provider elapsed time - The connection time at the service node.
- Transactions - The number of outgoing and incoming OAP messages to and from the service node.

Following is an example AMA record with module code 184:

OSSAIN 07 Enhancements (continued)

Example AMA record with module code 184

```
HEX ID:AA STRUCTURE CODE:40752C CALL CODE:192C
SENSOR TYPE:036C SENSOR ID:0123456C  REC OFFICE TYPE:036C
REC OFFICE ID:0123456C DATE:40707C TIMING IND:00000C
STUDY IND:0200000C SERVICE OBSERVED:0C ORIG NPA:629C
ORIG NUMBER:5201234C CONNECT TIME:1237548C
ELAPSED TIME:000000036C OPERATOR IDS:0009999009999C
ACC OPERATOR WORK TIME:00000C SERVICE FEATURE:000C
STATION SIGNALING IND:2C SCREENING CODE:000C
CALLED NUMBER INPUT:1C CALLING NUMBER SOURCE:1C
MODULE CODE:051C OVERSEAS IND:0C TERM NPA:00201C
TERM NUMBER:2201234C COMPLETION IND:001C RATE IND:1C
OSS CALL COMPLETION CONDITIONS:3111860C MODULE CODE:185C
SERV CODE:00033C MODULE CODE:184C SERV CODE:00003C
SN SEQUENCE NUMBER:00001C
SMALL INTERVAL ELAPSED TIME:03145C TRANSACTIONS:00007C
MODULE CODE:184C SERV CODE: 00010C
SN SEQUENCE NUMBER:00002C
SMALL INTERVAL ELAPSED TIME:12345C TRANSACTIONS:00002C
MODULE CODE:000C
```

The SERV CODE field in Module 184 records the Service Node ID. The SMALL INTERVAL ELAPSED TIME field records the Service Provider Elapsed Time.

Module code 185 - Service ID

This module records the Network Service ID of the OSSAIN service provided. This module is included in all AMA records for calls utilizing an OSSAIN service. The Network Service ID is datafilled in the NETWRKID field of table OACTLDEF.

This module is not replicative; there is only one instance of this module per record.

The following table provides information for module code 185:

Module code 185

Information	Field number	Number of characters
Module code	88	4
Network service ID	105	6

Following is an example AMA record with module code 185:

Example AMA record with module code 185

```
HEX ID:AA STRUCTURE CODE:40752C CALL CODE:192C
SENSOR TYPE:036C SENSOR ID:0123456C  REC OFFICE TYPE:036C
REC OFFICE ID:0123456C DATE:40707C TIMING IND:00000C
STUDY IND:0200000C SERVICE OBSERVED:0C ORIG NPA:629C
ORIG NUMBER:5201234C CONNECT TIME:1237548C
ELAPSED TIME:000000036C OPERATOR IDS:0009999009999C
ACC OPERATOR WORK TIME:00000C SERVICE FEATURE:000C
STATION SIGNALING IND:2C SCREENING CODE:000C
CALLED NUMBER INPUT:1C CALLING NUMBER SOURCE:1C
MODULE CODE:051C OVERSEAS IND:0C TERM NPA:00201C
TERM NUMBER:2201234C COMPLETION IND:001C RATE IND:1C
OSS CALL COMPLETION CONDITIONS:3111860C MODULE CODE:185C
SERV CODE:00033C MODULE CODE:184C SERV CODE:00003C
SN SEQUENCE NUMBER:00001C
SMALL INTERVAL ELAPSED TIME:03145C TRANSACTIONS:00007C
MODULE CODE:000C
```

The SERV CODE field in module 185 records the Network Service ID.

Module code 186 - Service node formatted - small

This module records custom billing data from a service node or an OPP-compatible position. Using OAP or OPP, a service node or OPP-compatible position can request the switch to append its formatted billing data to the billing record. The DMS switch is unaware of the contents of the billing data. The knowledge of the data is in the service node and the downstream processor.

This module is replicative. The Service Node Data Identifier field specifies the data format of the Service Node Data - Small field. Hexadecimal is the only data format supported at this time. The size of the Service Node Data - Small field is 20 bytes. For custom billing data that is less than 20 bytes, the data is padded to the right with #Fs to fill the 20 byte field.

This module can be appended to an AMA record multiple times, but there is an 800 byte limit on the total number of bytes the Service Node Formatted modules (Small and Large) can use.

OSSAIN 07 Enhancements (continued)

The following table provides information for module code 186:

Module code 186

Information	Field number	Number of characters
Module code	88	4
Service node ID	105	6
Service node data ID	613	2
Service node data - small	614	40

Field 613, Service Node Data Identifier, is a new AMA field with the following definition:

Field 613

Character	Meaning
1	0 = Not used 1 = BCD 2 = EBCDIC 3 = Hexadecimal 4 = ASCII 5-9 = Reserved
2	Sign (Hex C)

Note: For Module 186 and 187, the Service Node Data Identifier is always set to 3 (Hexadecimal).

Field 614, Service Node Data - Small, is a new AMA field with the following definition:

Field 614

Character	Meaning
40	Data from service node

Following is an example AMA record with module code 186:

Example AMA record with module code 186

```
HEX ID:AA STRUCTURE CODE:40752C CALL CODE:192C
SENSOR TYPE:036C SENSOR ID:0123456C  REC OFFICE TYPE:036C
REC OFFICE ID:0123456C DATE:40707C TIMING IND:00000C
STUDY IND:0200000C SERVICE OBSERVED:0C ORIG NPA:629C
ORIG NUMBER:5201234C CONNECT TIME:1237548C
ELAPSED TIME:000000036C OPERATOR IDS:0009999009999C
ACC OPERATOR WORK TIME:00000C SERVICE FEATURE:000C
STATION SIGNALING IND:2C SCREENING CODE:000C
CALLED NUMBER INPUT:1C CALLING NUMBER SOURCE:1C
MODULE CODE:051C OVERSEAS IND:0C TERM NPA:00201C
TERM NUMBER:2201234C COMPLETION IND:001C RATE IND:1C
OSS CALL COMPLETION CONDITIONS:3111860C MODULE CODE:185C
SERV CODE:00033C MODULE CODE:184C SERV CODE:00003C
SN SEQUENCE NUMBER:00001C
SMALL INTERVAL ELAPSED TIME:03145C TRANSACTIONS:00007C
MODULE CODE:186C SERV CODE:00010C SERVICE NODE DATA
IDENTIFIER:3C SERVICE NODE DATA SMALL:
000048454C5021204920414D2054524150454421 CODE:000C
```

The SERV CODE field in module 186 records the Service Node ID.

Module code 187 - Service node formatted - large

This module records custom billing data from a service node or an OPP-compatible position. Using OAP or OPP, a service node or OPP-compatible position can request the switch to append its formatted billing data to the billing record. The DMS switch is unaware of the contents of the billing data. The knowledge of the data is in the service node and the downstream processor.

This module is replicative. The Service Node Data Identifier field specifies the data format of the Service Node Data - Large field. Hexadecimal is the only data format supported at this time. The size of the Service Node Data - Large field is 70 bytes. For custom billing data that is less than 70 bytes, the data will be padded to the right with #Fs to fill the 70 byte field.

This module can be appended to an AMA record multiple times, but there is an 800 byte limit on the total number of bytes the Service Node Formatted modules (Small and Large) can use.

OSSAIN 07 Enhancements (continued)

The following table provides information for module code 187:

Module code 187

Information	Field number	Number of characters
Module code	88	4
Service node ID	105	6
Service node data ID	613	2
Service node data - large	615	140

Field 615, Service Node Data - Large, is a new AMA field with the following definition:

Field 615

Character	Meaning
140	Data from service node

Following is an example AMA record with module code 187.

Example AMA record with module code 187

```
HEX ID:AA STRUCTURE CODE:40752C CALL CODE:192C
SENSOR TYPE:036C SENSOR ID:0123456C  REC OFFICE TYPE:036C
REC OFFICE ID:0123456C DATE:40707C TIMING IND:00000C
STUDY IND:0200000C SERVICE OBSERVED:0C ORIG NPA:629C
ORIG NUMBER:5201234C CONNECT TIME:1237548C
ELAPSED TIME:000000036C OPERATOR IDS:0009999009999C
ACC OPERATOR WORK TIME:00000C SERVICE FEATURE:000C
STATION SIGNALING IND:2C SCREENING CODE:000C
CALLED NUMBER INPUT:1C CALLING NUMBER SOURCE:1C
MODULE CODE:051C OVERSEAS IND:0C TERM NPA:00201C
TERM NUMBER:2201234C COMPLETION IND:001C RATE IND:1C
OSS CALL COMPLETION CONDITIONS:3111860C MODULE CODE:185C
SERV CODE:00033C MODULE CODE:184C SERV CODE:00003C
SN SEQUENCE NUMBER:00001C
SMALL INTERVAL ELAPSED TIME:03145C TRANSACTIONS:00007C
MODULE CODE:187C SERV CODE:00010C  SERVICE NODE DATA
IDENTIFIER:3C SERVICE NODE DATA
LARGE:000005748592041524520594F55204445434F44494E47205448
495320444154413F204745542041204C494645212020
4C495645204C4F4E4720414E442050524F5350455221
MODULE CODE:000C
```

The SERV CODE field in module 187 records the Service Node ID.

Custom AMA enhancement (unchanged from OSSAIN, ENSV0014)

Custom AMA data is appended to the Call Code 189 (Originating with credit recording service) AMA record for the TOPS Charge Adjust service. If the OPP compatible position wishes to append custom AMA with the Charge Adjust AMA record, it must send the custom AMA data prior to providing the service. Similarly, if the service node wishes to append any custom AMA with the Charge Adjust AMA record, it must send the custom AMA data prior to transferring to an OPP compatible position that provides the service.

The attached data is module codes 186 (Service Node Formatted - Small) and 187 (Service Node Formatted - Large)

Following is an example AMA record with call code 189.

OSSAIN 07 Enhancements (continued)

Example AMA record with call code 189

```
HEX ID:AA  STRUCTURE CODE:40772C  CALL CODE:189C
SENSOR TYPE:036C SENSOR ID:0123456C  REC OFFICE TYPE:036C
REC OFFICE ID:0123456C DATE:00522C  TIMING IND:00000C
STUDY IND:0200000C  SERVICE OBSERVED:0C ORIG NPA:619C
ORIG NUMBER:5200000C  CONNECT TIME:1048392C ELAPSED
TIME:000000000C  OPERATOR IDS:1060211009999C
ACC OPERATOR WORK TIME:00000C  MOD SERV OR EQUIP IND:256C
STATION SIGNALING IND:2C  MODIFIED TRMT IND:256C
CALLED NUMBER INPUT:3C CALLING NUMBER SOURCE:1C
ADDITIONAL SERV INFO:998C  MODULE CODE:311C
ORIG CALL TYPE:002C  MODULE CODE:058C
SERVICE DIFFICULTY DATE:00522C
SERVICE DIFFICULTY TIME:1048392C  OVERSEAS IND:0C
TERM NPA:00201C TERM NUMBER:2200000C  COMPANY ID:FFFFFF
SERVICE DIFFICULTY:0C NUMBER OF OCCURRENCES:001C
CHARGE ADJ INDICATOR:1C AMOUNT OF CREDIT:FFFFFF
MINUTES OF CREDIT:022C  MODULE CODE:187C SERV CODE:00000C
SERVICE NODE DATA IDENTIFIER:3C SERVICE NODE
DATA LARGE: 12345678ABCD
1234567890ABCDEF12345678ABCDAAAABBBBCCCCDDDDEEEEAAAABBBB
CCCCDDDDEEEEAAAABBBBCCCCDDDDEEEEAAAABBBBCCCCDDDDEEEE
AAAAAAAAAAAA4373BBBB MODULE CODE:186C  SERV CODE:00000C
SERVICE NODE DATA IDENTIFIER:3C SERVICE NODE DATA SMALL:
EEEEAAAABBBB CCCCDDDDEEEEAAAABBBBCCCCDDDD
MODULE CODE:310C  KEYING ACTIONS:111111111C
MODULE CODE:104C TRUNK FACILITY ID:104060001C
MODULE CODE:000C
```

Account code billing (unchanged from OSSAIN, ENSV0014)

For account code billing at an OSSAIN service node, the service node sends the DMS switch a four digit account code in the Alternate Billing Directory Number data block (DB). The four digit account code is then recorded in the standard AMA Account Code billing module. If the account code entered by the subscriber contains less than four digits, the service node pads the account code in front with zeroes. An account code billing call must be class charged as Station Paid by the service node.

Station Message Detail Recording

OSSAIN 07 Enhancements does not affect Station Message Detail Recording.

OSSAIN 07 Enhancements (continued)

Datafilling office parameters

The following table shows the office parameters used by OSSAIN 07 Enhancements . For more information about office parameters, refer to *Office Parameters Reference Manual.*

Office parameters used by OSSAIN 07 Enhancements

Table name	Parameter name	Explanation and action
OFCENG	OSSAIN_ NUM_RU	This parameter determines how many OSSAIN recording units (extension blocks) are necessary for processing OSSAIN call traffic. Each OSSAIN call requires an OSSAIN recording unit. An OAIN301 log indicating resource trouble is generated if an OSSAIN recording unit cannot be obtained for a call and the call is routed to a no software resources (NOSR) treatment. The range of this parameter is 0 to 32767. The default is 100. When this functionality is not activated, the value is 0. Activation is immediate for either an increase or a decrease. However, store is not automatically deallocated for a decrease since calls in progress may be using the affected store. A subsequent cold or reload restart is required for store deallocation. These extension blocks are used in a standalone and OSAC remote (not an OSAC host). **Calculation:** Each active OSSAIN call requires an OSSAIN recording unit. The following calculation can be used as a guideline for determining how many active OSSAIN calls are possible in the switch. This number is used to provision the number of OSSAIN RUs: (% of calls incoming on TOPS trunks that route to OSSAIN) x (number of TOPS trunk group members) + (% of calls incoming on ATC trunks that route to OSSAIN) x (number of ATC trunk group members) + (% of calls incoming on IT trunks that route to OSSAIN) x (number of IT trunk group members) + (the summation of MAXCALLS in all OSSAIN session pools excluding those defined as OSAC origination types) This equation is applicable to both standalone and remote switches.

OSSAIN 07 Enhancements (continued)

Office parameters used by OSSAIN 07 Enhancements

Table name	Parameter name	Explanation and action

		Under provisioning prevents calls from being processed, generates an OAIN301 log, and routes the call to NOSR treatment. Over provisioning allocates memory that is not used.
		
		An allocated RU is held until the call is taken down.
		
		Verification: To verify that OSSAIN recording units have been provisioned sufficiently, use the CI command OMSHOW EXT ACTIVE OSSAINRU. An entry similar to the following is displayed:
		
		`EXTSEIZ EXTOVFL EXTHI EXTSEIZ2 EXTHI2`
		`134 OSSAINRU`
		`100 0 0 1 0`
		
		Any nonzero value in field EXTOVFL indicates under provisioning.

OFCENG	OSAC_ NUM_RU	This parameter determines the number of OSAC extension blocks to allocate for a switch. An OSAC RU is used for OSAC call processing in the OSAC host. The range of this parameter is 0 to 32767. The default value is set to 0 since this parameter is only needed at the OSAC host. If the switch is purely a standalone or OSAC remote switch, the value does not need to be changed. If the switch is acting as an OSAC host for any service nodes, then the value for this parameter should be increased. Activation for an increase or decrease is immediate. However, for a decrease, store is not immediately deallocated since current OSAC calls may be using the affected store. Store is deallocated at the next cold or reload restart. These extension blocks are only used in an OSAC host. The EXT operational measurement is associated with this parameter.

Office parameters used by OSSAIN 07 Enhancements

Table name	Parameter name	Explanation and action

		Calculation:
		
		Each call at the OSAC host requires an OSAC extension block. The following calculation can be used as a guideline in determining how many simultaneous OSAC calls at the host are possible.
		
		Add field MAXSESN in table OASESNPL for all session pools with ORIGTYPE = OSACTERM.
		
		The consequence of over provisioning is that store is allocated but never used.
		
		The consequence of under provisioning is that some OSAC calls are not processed because an OSAC RU is not available. Log OAIN 301 is generated which indicates that a software resource was unavailable (that is, OSAC RU).
		
		An OSAC RU is obtained at the OSAC host when the host receives a session request from an OSAC remote. This is performed for both subscriber originations and service node initiations. The OSAC RU is held until the session between the OSAC remote and service node has ended.
		
		Verification: To verify that OSAC recording units have been provisioned sufficiently, use the CI command OMSHOW EXT ACTIVE OSACRU. An entry similar to the following is displayed:
		
		`EXTSEIZ EXTOVFL EXTHI EXTSEIZ2 EXTHI2`
		`161 OSACRU`
		`100 0 0 1 0`
		
		Any nonzero value in field EXTOVFL indicates under provisioning.

OFCENG	CRS_ SUBRU_ POOL1_ SIZE	Provisioning for this parameter is updated. The extension block governed by this parameter is now used for OSSAIN calls. This extension block is used by AMA to store the Network Service ID of the OSSAIN call. Each call requires only one extension block. The following formula is added to the existing formula: <existing equation> + # of OSSAIN calls

OSSAIN 07 Enhancements (continued)

Office parameters used by OSSAIN 07 Enhancements

Table name	Parameter name	Explanation and action
OFCENG	CRS_ SUBRU_ POOL2_ SIZE	Provisioning for this parameter is updated. The extension block governed by this parameter is now used for OSSAIN calls. This extension block is used by AMA to store service node information related to OSSAIN calls. An extension block is used for each service node involved in the call. The maximum number of service nodes allowed in a call is determined by parameter MAX_ALLOWED_TRANSITIONS in table OAINPARM. This extension block is also used to store service node formatted billing data (sent through OAP or OPP) that is less or equal to 20 bytes. An extension block is used for each Append AMA Module request that contains AMA data that is less or equal to 20 bytes. The following formula is added to the existing formula: <existing equation> + 1 * (# of OSSAIN calls involve 1 service node) + 2 * (# of OSSAIN calls involve 2 service nodes) + . . . MAX_ALLOWED_TRANSITIONS * (# of OSSAIN calls involve MAX_ALLOWED_TRANSITIONS service nodes) + (MAX_ALLOWED_TRANSITIONS+1) * (# of OSSAIN calls involve (MAX_ALLOWED_TRANSITIONS+1) service nodes) + # of TOPS OSSAIN Append AMA Module requests with AMA data less or equal to 20 bytes.
OFCENG	CRS_ SUBRU_ POOL4_ SIZE	Provisioning for this parameter is updated. The extension block governed by this parameter is now used for OSSAIN calls. This extension block is used to store service node formatted billing data (sent through OAP or OPP) that is between 21 to 70 bytes. An extension block is used for each append AMA module request that contains AMA data that is between 21 and 70 bytes. The following formula should be added to the existing formula: <existing equation> + # of TOPS OSSAIN Append AMA Module requests with AMA data between 21 to 70 bytes.

OSSAIN 07 Enhancements (continued)

Office parameters used by OSSAIN 07 Enhancements

Table name	Parameter name	Explanation and action
OFCENG	MINIMUM_ CHARGE_ DURATION	This existing parameter is not changed. This parameter indicates the minimum conversation time before billable conversation time starts. This parameter is used by OSSAIN for prepaid calling card service. Control of stopping the conversation time is provided in table OATLKPRF by field STOPCNVT (a refinement of fields STAR and OCTO). Prepaid calling card service allows billing to a calling card with a preset amount of conversation time already paid for by the card holder. The card account is debited by the billable conversation time for each call billed to the card. In addition, a call in progress must be interrupted when conversation time for the card has expired.
OFCENG	TOPS_ BRAND_ DISPLAY	This existing parameter is not changed. This parameter determines how branding status of a call is displayed at an operator position for OSSAIN as well as TOPS calls.

Datafill sequence

The following table lists the tables that require datafill to implement OSSAIN 07 Enhancements . The tables are listed in the order in which they are to be datafilled.

Datafill tables required for OSSAIN 07 Enhancements

Table	Purpose of table
Define the EIUs	
LIUINV	Link interface inventory for EIUs
IPNETWRK	Internet Protocol Network for EIUs
IPROUTER	Internet Protocol Router for EIUs
IPTHRON	Internet Protocol Throttling Numbers for EIUs
Define the nodes	
ENTYPES	External Node Types defines node types for table OANODINV.
ENSITES	External Node Sites defines node sites for table OANODINV.
OANODNAM	OSSAIN Node Name defines OSSAIN node identifiers and name.

OSSAIN 07 Enhancements (continued)

Datafill tables required for OSSAIN 07 Enhancements

Table	Purpose of table
OANODINV	OSSAIN Node Inventory defines OSSAIN node device hardware.
Define the voice links	
CLLI	Common Language Location Identifier names voice links to service nodes and remotes. Host-remote voice links must be datafilled in both the host and remote.
TRKGRP	Trunk group defines service node and remote voice links. Host-remote voice links must be datafilled in both the host and remote.
TRKSGRP	Trunk subgroup defines service node and remote voice links. Host-remote voice links must be datafilled in both the host and remote.
TRKMEM	Trunk Member defines service node and remote voice links. Host-remote voice links must be datafilled in both the host and remote.
OSCVLGRP	OSSAIN Voice Link Group define voice links between an OSAC host and other OSAC remotes. This table is only datafilled in the host switch.
OAVLMAP	OSSAIN Voice Link Mapping defines voice links to service nodes and remotes. Host-remote voice links must be datafilled in both the host and remote.
CONF3PR	Conference three port allocates CF3Ps in remotes.
Route through QMS	
STDPRTCT. STDPRT	Standard Pretranslator Control Subtable provides pretranslations.
QAPLNDEF	QMS Application Definition sets call and agent queue limits.
QMSCQDEF	QMS Call Queue Definition defines call and agent queues.
QMSTOPS	Queue Management System TOPS provides an initial call queue assignment according to the call origination type.
CT4QNAMS	Call Type for Queue Names selects OSSAIN or operator processing.
QMS tables	Calls marked for OSSAIN are routed through QMS, including optional refinement tables. Therefore, new dedicated queues for OSSAIN must be datafilled. Refer to the Host QMS functionality, ADVQ0003, for further details.
OQCQPROF	OSSAIN QMS Call Queue Profile defines agent and call queues for use by OASESNPL.

OSSAIN 07 Enhancements (continued)

Datafill tables required for OSSAIN 07 Enhancements

Table	Purpose of table
OASESNPL	OSSAIN Session Pool defines OSSAIN agent pools.
Select services	
OAFUNDEF	OSSAIN Function Definition indicates the OSSAIN service provider.
OAINPRE	OSSAIN Preprocessing defines the function for a preprocessing CT4Q.
OAFUNBLK	OSSAIN Function Blocking indicates the functions in OACTLDEF that are blocked per DN by tables DNSCRN and TOPSDB.
TOPSDB	TOPS Data Base associates DN with index into table OAFUNBLK for blocking functions based on DN.
DNSCRN	Directory Number Screening associated DN with index into table TOPSDB for blocking functions based on DN.
OACTLDEF	OSSAIN Control Lists Definition contains lists of sequentially performed OSSAIN services.
OAFNDISP	OSSAIN Function Definition for treatment of call deflection or overflow, blocking, or failure to send a session begin message.
OADTFPRF	OSSAIN DTMF Profile selects services by DTMF digits.
OACAUPRF	OSSAIN Cause Profile selects services by ISUP class and cause codes.
OADSCPRF	OSSAIN Post Disconnect Profile selects services by types of post disconnects.
OATLKPRF	OSSAIN Talking Profile selects services by types of events during the talking portion of a call.
OACNNPRF	OSSAIN Connecting Profile selects services by types of call connects.
OATPRFIX	OSSAIN Trigger Profile Index provides indices into tables OACNNPRF, OATLKPRF, and OADSCPRF.
OAINCTLA	OSSAIN Control List Assignment selects services and control lists for CT4Qs marked for OSSAIN service nodes.
OAINPARM	OSSAIN Parameters contains parameters for OSSAIN.
TOPSPARM	TOPS Parameters contains a new parameter that displays the called number.
TOPSPOS	TOPS Position defines characteristics of TOPS positions.

OSSAIN 07 Enhancements (continued)

Datafilling table LIUINV

Table LIUINV describes the hardware configuration for all Application Specific Units (ASUs) which includes the EIU. The EIU hardware information is datafilled in this table. A total of eight EIUs are allowed per SuperNode. All eight EIUs may be placed on a single LPP (or FLIS) or they may span across several LPPs.

The following table describes some of the fields. For a description of the other fields, refer to the data schema section of this document.

Datafilling table LIUINV

Field	Subfield or refinement	Entry	Explanation and action
LIUNAME	LIUTYPE	EIU	Datafill a primary and secondary EIU for each ethernet LAN connection provisioned off the switch.
CARDINFO	MAC_ ADDRESS	obtain from NORTEL	For EIU and NT9X84AA, the MAC_ADDRESS is unique to each EIU and must be obtained from Nortel

Datafill example for table LIUINV

The following example shows sample datafill for table LIUINV.

MAP display example for table LIUINV

```
LIUNAME     LOCATION     LOAD          PROCINFO
                                                CARDINFO
_____________________________________________________________
EIU 0       LIM  0 1 12  ETC35nn       NTEX22BB
                    NT9X84AA NT9X85AA  NO 000075F00000
```

Datafilling table IPNETWRK

Table IPNETWRK stores all of the Internet specific information about the internet network and SuperNode subnetwork. This table specifies the default EIU router to use when communicating with the DMS switch CM. Each LAN subnet that communicates with the DMS switch CM does so through a primary EIU. A secondary EIU can be designated as an alternative router to the subnet if the primary EIU fails*2. If an IP message is destined for a LAN subnet that is not supported by one of the primary EIUs, the default EIU can be used. The default EIU is used anytime the IP routing software resident on the CM determines that a message is not bound for a supported subnet.

In order to datafill this table, the specified EIU must be datafilled in LIUINV, the EIU must be off-line.

The following table describes some of the fields. For a description of the other fields, refer to the data schema section of this document.

Datafilling table IPNETWRK

Field	Subfield or refinement	Entry	Explanation and action
KEYREF		0	Enter 0, the only allowable value. This table can only have one tuple.
CMIPADDR		full 4-part IP address	Enter the full 4-part IP address of the CM. IP addresses are obtained from the Network Information Center (NIC) prior to installation by the Operating Company.
SUBNET		number of bits	Enter the number of bits in the subnet mask.
OPTION	WORD_EIU	EIU	An entry for EIU 0 must be datafilled for connection to the network.
PARMAREA		SCRNFLAG Y$	Enter SCRNFLAG Y$. This protects the DMS switch from being bombarded by unnecessary messages; they would use CPU time. Nodes not defined in table OANODINV are screened from the DMS switch.

Datafill example for table IPNETWRK

The following example shows sample datafill for table IPNETWRK.

MAP display example for table IPNETWRK

```
KEYREF   CMIPADDR     SUBNET                    OPTION
                                                PARMAREA
_____________________________________________________
0        47 245 9 1   16            (      EIU   0)$
                                              (SCRNFLAG Y)$
```

[2] * Note that the EIUs act as routers between the DMS switch CM and the LAN subnets. The IP address of the DMS switch CM is specified as the destination address when sending a UDP message to the DMS switch.

OSSAIN 07 Enhancements (continued)

Datafilling table IPROUTER

This table stores the Internet specific information for each of the ethernet interface units (EIUs) that are acting as internet protocol (IP) routers between the DMS switch computing module (CM) and ethernet local area network (LAN).

Tables LIUINV and IPNETWRK must be datafilled before IPROUTER and the corresponding EIUs referred to in the datafill must be off line.

The following table describes some of the fields. For a description of the other fields, refer to the data schema section of this document.

Datafilling table IPROUTER

Field	Subfield or refinement	Entry	Explanation and action
RKEY		0 to 63	Router key. Add tuples for new EIUs.
SNIPADR		full SuperNode side of EIU 4-part IP address	Enter the full SuperNode side of the EIU 4-part IP address.
ETHIPADR		from IPHOST, field LANADOR	Enter LAN side of EIU 4-part IP address.

Datafill example for table IPROUTER

The following example shows sample datafill for table IPROUTER.

MAP display example for table IPROUTER

```
RKEY   ROUTER   SNIPADR      ETHIPADR       ETHARP ETHPARP
-------------------------------------------------------------
  0     EIU    47 245 9 2   47 245 0 21     YES     YES
```

Datafilling table IPTHRON

The IP throttling numbers are datafilled in this table. IP messages between the CM and EIU require throttling in order to control congestion in the Local Message Switch (LMS) of the LPP and the Message Switch (MS) of the SuperNode. The throttling numbers datafilled in IPTHRON control this throttling.

The following table describes some of the fields. For a description of the other fields, refer to the data schema section of this document.

Datafilling table IPTHRON

Field	Subfield or refinement	Entry	Explanation and action
LMSNODE	LIUNAME	EIU	Add EIUs to prevent bottlenecks in IP communications.
TXCAPCT and RXCAPCT		0 to 32767	Transmit and receive capacity in Kbits/sec The IP throttling numbers for EIUs datafilled in LIUINV default to zero which is 100% throttling (that is, value 0 means no data is transmitted). Which means, the EIU cannot communicate with the CM across the DS30 (DS512) links. Each throttling number must be changed to a non-zero number to allow communication.

Datafill example for table IPTHRON

The following example shows sample datafill for table IPTHRON.

MAP display example for table IPTHRON

```
LMSNODE   TXCAPCT   RXCAPCT                    OPTION
_____________________________________________________
EIU  0    10        40                         CM 25$
```

Datafilling table ENTYPES

The following table describes the fields.

Datafilling table ENTYPES

Field	Subfield or refinement	Entry	Explanation and action
ENTYPE		alphanumeric (1 to 12 characters)	External node type. This table is not changed. Enter a tuple for each node type used in table OANODINV.

Datafill example for table ENTYPES

The following example shows sample datafill for table ENTYPES.

OSSAIN 07 Enhancements (continued)

MAP display example for table ENTYPES

```
ENTYPE
------------------------------------------------------
SN
SWITCH
```

Datafilling table ENSITES

The following table describes the fields.

Datafilling table ENSITES

Field	Subfield or refinement	Entry	Explanation and action
ENSITE		alphanumeric (1 to 12 characters)	External node site. This table is not changed. Enter a tuple for each node site used in table OANODINV.

Datafill example for table ENSITES

The following example shows sample datafill for table ENSITES.

MAP display example for table ENSITES

```
ENSITE
------------------------------------------------------
LOCAL
SN_SITEA
```

Datafilling table OANODNAM

OSSAIN node name is a new table that contains the network wide node identifiers and associated node name of each node known by the switch where the datafill is taking place.

Table OANODNAM must be datafilled before table OANODINV since node names defined in OANODNAM are used in OANODINV.

The following table describes the fields.

Datafilling table OANODNAM

Field	Subfield or refinement	Entry	Explanation and action
NODEID		0 to 767	Node identifier. This is the key field that is the OSSAIN node identifier. Identifiers must be unique. Datafill a tuple for each node that this switch (with this table) communicates. Also, for an OSAC configuration, datafill a tuple for this switch. This field must correlate between the switches. For example, if service nodes SN_01 and SN_02 are values 3 and 4 in the host, then these nodes must be the same values in all remotes.
NODENAME		alphanumeric (up to 12 characters)	Node Name. This field defines a unique node name associated with the node identifier. This name is used by other tables. It is recommended that the same node name be used when datafilling a service node in different switches.

Datafill example for table OANODNAM

The following example shows sample datafill for table OANODNAM.

MAP display example for table OANODNAM

```
NODEID     NODENAME
-------------------------------------------------------
0          HOST1
1          REMOTE1
2          REMOTE2
3          BRAND_01
4          DEBIT_01
5          AABS_01
```

Datafilling table OANODINV

Table OSSAIN Node Inventory provides OSSAIN node specific information.

This table is modified as follows:

- Field NODEID is moved to table OANODNAM.
- New node types OSN and OSAC are added.

OSSAIN 07 Enhancements (continued)

- All node information from table EXNDINV is moved into table OANODINV. Therefore, table EXNDINV no longer requires datafill.
- The number of OSNM nodes that can be datafilled is increased from 32 to 256.
- Prior node type OSNM has new subfields.

Table OANODNAM must be datafilled before table OANODINV.

The following is a description of table OANODINV:

Datafilling table OANODINV

Field	Subfield or refinement	Entry	Explanation and action
NODENAME		name from table OANODNAM	Node Name. This is the key field. Enter a name defined in table OANODNAM. Datafill a tuple for each node that this switch (with this this table) communicates. Also, for an OSAC configuration, datafill a tuple for this switch It is recommended that the same node name be used when datafilling a service node in different switches.

OSSAIN 07 Enhancements (continued)

Datafilling table OANODINV

Field	Subfield or refinement	Entry	Explanation and action
NODEAREA		see subfield ONPMTYPE	Node area. This field consists of subfield ONPMTYPE and refinements.
	ONPMTYPE	OSN, OSAC, or OSNM	OSSAIN node peripheral module type. The values are defined as follows: • OSN - OSSAIN node not maintained. This value is assigned to service nodes that are not maintained by the switch with this datafill. This value is assigned in a remote switch to all service nodes that the remote uses since only hosts maintain service nodes. Also, this value is assigned in a host switch to service nodes that the host uses but are maintained by another host switch. Datafill refinements ENNODENO, PROTOCOL_AREA, HOSTNAME, FAIL_DET, AUDFREQ, ONODTYPE, ONODLOC, ONODSITE, and ONODINFO. • OSAC - OSSAIN centralization. This value is assigned to switch nodes (hosts or remotes). Datafill RELATION_AREA and refinements. • OSNM - OSSAIN node maintained. This value is assigned in a host switch to service nodes that are maintained by this host switch. Datafill refinements ENNODENO, PROTOCOL_AREA, FAIL_DET, AUDFREQ, TSTTIME, RTSTIME, ONODTYPE, ONODLOC, ONODSITE, and ONODINFO.

OSSAIN 07 Enhancements (continued)

If ONPMTYPE = OSN, datafill subfields ENNODENO, PROTOCOL_AREA, HOSTNAME, FAIL_DET, AUDFREQ, ONODTYPE, ONODLOC, ONODSITE, and ONODINFO.

Datafilling table OANODINV (ONPMTYPE = OSN)

Field	Subfield or refinement	Entry	Explanation and action
	ENNODENO	0 to 255	External node number. This field uniquely identifies the external node number of the external node peripheral module type. It is recommended to use the same number when datafilling a host in different remotes to avoid potential confusion.
	PROTOCOL_ AREA	see subfield PROTOCOL	Protocol area. This field consists of subfield PROTOCOL.
	PROTOCOL	UDP	Protocol. The protocol for transport layer messaging. UDP is the only valid entry. Datafill subfield ADDRESS_AREA and refinements.
	ADDRESS_A REA	see subfield ADDRTYPE	Address area. This field consists of subfield ADDRTYPE.
	ADDRTYPE	IPV4	Internet protocol address type. The only valid entry is IPV4 (IP version 4). Datafill refinement IPV4ADDR.
	IPV4ADDR	4 numbers, each 0-255	Internet protocol version 4 address. Enter the IP address for this node.
	HOSTNAME	alphanumeric (up to 12 characters)	Host name. This field is the node name of the OSAC node that maintains this service node being datafilled.
	FAIL_DET	see subfield FDETECT	Failed message detection. This field consists of subfield FDETECT.
	FDETECT	Y or N	Failed message detection. Indicates that whether failed message detection is enabled (Y) or not (N). If set to Y, the count is checked periodically according to field AUDFREQ. The default is N. If FDETECT = Y, datafill subfield FTHRESH.

OSSAIN 07 Enhancements (continued)

Datafilling table OANODINV (ONPMTYPE = OSN)

Field	Subfield or refinement	Entry	Explanation and action
	FTHRESH	0 to 100	Failed message threshold. If FDETECT = Y, datafill this field. Enter the maximum percent of failed messages (do not meet OAP specifications) received from an external node before the DMS switch takes action. For ONPMTYPE = OSN, the connection to the external node is system busied.
	AUDFREQ	20 to 600	Audit frequency. Enter the number of seconds between connection audits. The default is 20.
	ONODTYPE	name from table ENTYPES	OSSAIN node type. This field describes the type of node being datafilled. The value must be previously datafilled in table ENTYPES.
	ONODLOC	see subfields	OSSAIN node location. This field consists of subfields FLOOR, ROW, and POSITION. These subfields identify the exact location of the node at the site.
	FLOOR	0 to 99	Floor number where the node is located.
	ROW	alphanumeric (up to 2 characters)	Row number on the floor where the node is located.
	POSITION	0 to 99	Bay position number in the row where the node is located.
	ONODSITE	name from table ENSITES	OSSAIN node site. This field describes the site where the node being datafilled is located. The value must be previously datafilled in table ENSITES.
	ONODINFO	alphanumeric (up to 20 characters)	OSSAIN node information. This field is used for describing the node being datafilled. This information is displayed on the node maintenance MAP display when this node is posted. This field is used for documentation purposes only.

OSSAIN 07 Enhancements (continued)

If ONPMTYPE = OSAC, datafill subfield RELATION_AREA and refinements.

Datafilling table OANODINV (ONPMTYPE = OSAC)

Field	Subfield or refinement	Entry	Explanation and action
	RELATION_AREA	see subfields	Relationship area. This field consists of subfield RELATION and refinements.
	RELATION	SELF or OTHER	Relationship of node in this tuple to the switch that contains this datafill. The values are defined as follows: • SELF - The node in this tuple is the same switch that contains this datafill. No further datafill is required in this table. Only one tuple with ONPMTYPE of OSAC and RELATION of SELF may be datafilled per OSAC switch. • OTHER - The node in this tuple is a different switch than the switch that contains this datafill. Datafill subfields ENNODENO, PROTOCOL_AREA, ONODTYPE, ONODLOC, and ONODSITE.
	ENNODENO	0 to 255	External node number. If RELATION = OTHER, datafill this field. This field uniquely identifies the external node number of the external node peripheral module type.
	PROTOCOL_AREA	see subfield PROTOCOL	Protocol area. If RELATION = OTHER, datafill this field. This field consists of subfield PROTOCOL.
	PROTOCOL	UDP	Protocol. The protocol for transport layer messaging. UDP is the only valid entry. Datafill refinement ADDRESS_AREA.
	ADDRESS_AREA	see subfield ADDRTYPE	Address area. This field consists of subfield ADDRTYPE.
	ADDRTYPE	IPV4	Internet protocol address type. The only valid entry is IPV4 (IP version 4). Datafill refinement IPV4ADDR.
	IPV4ADDR	4 numbers, each 0-255	Internet protocol version 4 address. Enter the IP address for the node.

OSSAIN 07 Enhancements (continued)

Datafilling table OANODINV (ONPMTYPE = OSAC)

Field	Subfield or refinement	Entry	Explanation and action
	ONODTYPE	name from table ENTYPES	OSSAIN node type. If RELATION = OTHER, datafill this field. This field describes the type of node being datafilled. The value must be previously datafilled in table ENTYPES.
	ONODLOC	see subfields	OSSAIN node location. If RELATION = OTHER, datafill this field. This field consists of subfields FLOOR, ROW, and POSITION. These subfields identify the exact location of the node at the site.
	FLOOR	0 to 99	Floor number where the node is located.
	ROW	alphanumeric (up to 2 characters)	Row number on the floor where the node is located.
	POSITION	0 to 99	Bay position number in the row where the node is located.
	ONODSITE	name from table ENSITES	OSSAIN node site. If RELATION = OTHER, datafill this field. This field describes the site where the node being datafilled is located. The value must be previously datafilled in table ENSITES.
	ONODINFO	alphanumeric (up to 20 characters)	OSSAIN node information. This field is used for describing the node being datafilled. This information is displayed on the node maintenance MAP display when this node is posted. This field is used for documentation purposes only.

OSSAIN 07 Enhancements (continued)

If ONPMTYPE = OSNM, datafill subfields ENNODENO, PROTOCOL_AREA, FAIL_DET, AUDFREQ, TSTTIME, RTSTIME, ONODTYPE, ONODLOC, ONODSITE, and ONODINFO.

Datafilling table OANODINV (ONPMTYPE = OSNM)

Field	Subfield or refinement	Entry	Explanation and action
	ENNODENO	0 to 255	External node number. This field uniquely identifies the external node number of the external node peripheral module type.
	PROTOCOL_ AREA	see subfield PROTOCOL	Protocol area. This field consists of subfield PROTOCOL.
	PROTOCOL	UDP	Protocol. The protocol for transport layer messaging. UDP is the only valid entry. Datafill refinements ADDRESS_AREA and NMTCPROT.
	ADDRESS_A REA	see subfield ADDRTYPE	Address area. This field consists of subfield ADDRTYPE.
	ADDRTYPE	IPV4	Internet protocol address type. The only valid entry is IPV4 (IP version 4). Datafill refinement IPV4ADDR.
	IPV4ADDR	4 numbers, each 0-255	Internet protocol version 4 address. Enter the IP address for the node.
	NMTCPORT	1024 to 32767	Node maintenance processing port. This field is the port number for sending a node class message to the service node. Call processing and session pool ports are datafilled in table OASESNPL. Refer to service node documentation or the developer for port number assignment.
	FAIL_DET	see subfield FDETECT	Failed message detection. This field consists of subfield FDETECT.
	FDETECT	Y or N	Failed message detection. Indicates that failed message detection is enabled (Y) or not (N). If set to Y, the count is checked periodically according to field AUDFREQ. The default is N. If FDETECT = Y, datafill subfield FTHRESH.

Datafilling table OANODINV (ONPMTYPE = OSNM)

Field	Subfield or refinement	Entry	Explanation and action
	FTHRESH	0 to 100	Failed message threshold. If FDETECT = Y, datafill this field. Enter the maximum percent of failed messages (do not meet OAP specifications) received from an external node before the DMS switch takes action. If ONPMTYPE = OSNM, the external node is system busied by the DMS switch. If ONPMTYPE = OSN, the connection to the external node is system busied.
	AUDFREQ	20 to 600	Audit frequency. Enter the number of seconds between node audits. The default is 20.
	TSTTIME	20 to 600	Test message time. This is the number of seconds that the DMS switch waits for a response after sending a TST message to a node or one of its session pools. If this time expires and no reply is received, the TST attempt fails. The default is 20.
	RTSTIME	20 to 600	Return to service time. This is the number of seconds that the DMS switch waits for a response after sending an RTS message to a node or one of its session pools. If this time expires and no reply is received, the RTS attempt fails. The default is 20.
	ONODTYPE	name from table ENTYPES	OSSAIN node type. This field describes the type of node being datafilled. The value must be previously datafilled in table ENTYPES.
	ONODLOC	see subfields	OSSAIN node location. This field consists of subfields FLOOR, ROW, and POSITION. These subfields identify the exact location of the node at the site.
	FLOOR	0 to 99	Floor number where the node is located.
	ROW	alphanumeric (up to 2 characters)	Row number on the floor where the node is located.
	POSITION	0 to 99	Bay position number in the row where the node is located.

OSSAIN 07 Enhancements (continued)

Datafilling table OANODINV (ONPMTYPE = OSNM)

Field	Subfield or refinement	Entry	Explanation and action
	ONODSITE	name from table ENSITES	OSSAIN node site. This field describes the site where the node being datafilled is located. The value must be previously datafilled in table ENSITES.
	ONODINFO	alphanumeric (up to 20 characters)	OSSAIN node information. This field is used for describing the node being datafilled. This information is displayed on the node maintenance MAP display when this node is posted. This field is used for documentation purposes only.

Datafill example for table OANODINV

The following example shows sample datafill for table OANODINV.

MAP display example for table OANODINV

```
NODENAME  NODEAREA
------------------------------------------------------------------------
HOST1     OSAC SELF
REMOTE1   OSAC OTHER 0 UDP IPV4  47 187 01 01  SWITCH
                                    2 B 11 DALLAS_1  REM_1
REMOTE2   OSAC OTHER 1 UDP IPV4  52 192 01 01  SWITCH
                                   23 HH 01  WASH_1 REM_2
BRAND_01  OSNM 1 UDP IPV4  47 245 1 34  7000 Y 2 20 240 60 SN
                                    4 BB 3  RTP_1  BRANDING_01
DEBIT_01  OSN 0 UDP IPV4  47 187 02 10  2  HOST1 Y 2 60 SN
                                    1 A 01 DALLAS_2  DEBIT_01
AABS_01   OSN 1 UDP IPV4  52 192 02  9  3  HOST1  Y 1 60 SN
                                     1 A 33 WASH_2  AABS_01
```

Error messages for table OANODINV

The following error messages apply to table OANODINV.

Error messages for table OANODINV

Error message	Explanation and action
The specified onpmtype and ennodeno combination is currently in use by another node. The onpmtype and ennodeno combination must be unique in table OANODINV.	Each node datafilled in table OANODINV must have a unique combination of ONPMTYPE and ENNODENO. If a node is datafilled specifying an ONPMTYPE / ENNODENO combination that is already in use by another OSSAIN node, this message is displayed.
The OSSAIN node PM type, ONPMTYPE, can not be modified. This node must be deleted and reentered if an ONPMTYPE change is desired.	The OSSAIN node PM type of a node datafilled in table OANODINV cannot be changed. If an attempt is made to change the ONPMTYPE, this message is displayed.
This node name is in use in table XXXXXXXX. You must remove all references to this node before you can delete it. Where XXXXXXXX is the name of the table using the node name.	Tuples may not be deleted from table OANODINV until all references to that node name are removed from tables OASESNPL, OAVLMAP, and OSCVLGRP. This error message is displayed if an attempt is made to delete a node name from OANODINV that is in use by any of these tables.
The specified IP address is currently in use by another node. IP addresses must be unique.	IP addresses datafilled in table OANODINV must be unique. If a duplicate IP address is datafilled, this message is displayed.
You have not requested that failed message detection be enabled for this node. It is recommended that FDETECT be set to Y to enable failed message detection.	If failed message detection is not requested (FDETECT = N), this message is displayed. Note, this is a warning, not an error. This datafill is still allowed.
This node must be off-line before its entry in table OANODINV can be modified. The change will not be performed.	A node must be in an off-line state in order to change its entry in table OANODINV is made. If an attempt is made to change a node's entry and the node is not off-line, the error message is displayed.

OSSAIN 07 Enhancements (continued)

Error messages for table OANODINV

Error message	Explanation and action
`This node must be off-line before it can be deleted from table OANODINV. The deletion will not be performed.`	A node must be in an off-line state before it can be deleted from table OANODINV. If an attempt is made to delete a node and the node is not off-line, the error message is displayed.
`An OSAC node with a relation of OTHER cannot be datafilled until the OSAC node with a relation of SELF is datafilled.`	A node with ONPMTYPE of OSAC and RELATION of SELF must be datafilled before a node with ONPMTYPE of OSAC and RELATION of OTHER. If an attempt is made to datafill an OSAC OTHER node prior to datafilling the OSAC SELF node, this message is displayed.
`Only one OSAC node with a relation of SELF may be datafilled.`	Only one node with an ONPMTYPE of OSAC and RELATION of SELF can be datafilled. If an attempt is made to datafill more than one node with this specification, this message is displayed.
`The node name specified in field HOSTNAME has not been datafilled in table OANODINV.`	When datafilling a HOSTNAME for an OSN node, the node name must be previously datafilled as an OSAC node with a RELATION of OTHER. If the node name has not been datafilled in OANODINV, this message is displayed.
`The node name specified in field HOSTNAME has not been datafilled with ONPMTYPE of OSAC or the RELATION has not been datafilled as OTHER.`	When datafilling a HOSTNAME for an OSN node, the node name must be previously datafilled as an OSAC node with a RELATION of OTHER. If the node name does not meet this criteria, this message is displayed.
`Node type in field ONODTYPE has not been datafilled in table ENTYPES.`	The node type datafilled in field ONODTYPE must be previously datafilled in table ENTYPES. If an attempt is made to datafill field ONODTYPE with a node type that has not been datafilled in table ENTYPES, this message is displayed.
`Node site in field ONODSITE has not been datafilled in table ENSITES.`	The site name datafilled in field ONODSITE must be previously datafilled in table ENSITES. If an attempt is made to datafill field ONODSITE with a site name not datafilled in table ENSITES, this message is displayed.

Error messages for table OANODINV

Error message	Explanation and action
`This OSAC node is referenced by an OSN node. All OSN references must be removed before this tuple can be deleted.`	All OSN nodes that specify an OSAC node as their host must be deleted before that OSAC node can be deleted. If an attempt is made to delete an OSAC node that is specified as the host of any OSN node, this message is displayed.
`The OSAC SELF tuple may not be deleted until all OSAC OTHER tuples are deleted.`	All nodes with an ONPMTYPE of OSAC and RELATION of OTHER must be removed before the OSAC SELF tuple can be deleted. If an attempt is made to delete the OSAC SELF tuple while OSAC OTHER nodes are datafilled, this message is displayed.

Datafilling table CLLI

This table is not changed. Datafill according to the switch configuration:

- Standalone - Datafill voice channels to service nodes.

  Three port conference circuits (CF3P) are required to make network connections between the originating and terminating parties and centralized service nodes.

- OSAC -Datafill voice links between OSAC remote and Host switches. Additional voice links may be required between the OSAC host and centralized service nodes to handle increased call volume.

  In the host, datafill voice channels to service nodes.

  Three port conference circuits are required in OSAC remote switches in order to make network connections between the originating and terminating parties and centralized service nodes. No CF3Ps are needed at the OSAC host for OSAC.

Voice channels to one or more service nodes can be combined in the same trunk group. The host-remote and host-service node links must have parallel datafill to ensure that both sides connect to the same voice circuit. The operating company and service node vendor are responsible for engineering the number of voice links to be used for a given node.

Also, allocate conference three ports in remotes only.

Datafill example for table CLLI

The following example shows sample datafill for table CLLI.

OSSAIN 07 Enhancements (continued)

MAP display example for table CLLI

```
CLLI          ADNUM  TRKGRSIZ   ADMININF
-----------------------------------------------------
OSSAINVL1     258    24         OSSAIN_VOICE_LINK_1
OSSAINVL2     259    24         OSSAIN_VOICE_LINK_2
CF3P          432    14         REMOTE_CONFERENCE_PORTS
```

Datafilling table TRKGRP

In the host, datafill trunk groups for voice channels to service nodes and remotes. In a remote, datafill a trunk group voice channel to the host. Voice channels to one or more service nodes can be combined in the same trunk group. The host-remote and host-service node links must have parallel datafill to ensure that both sides connect to the same voice circuit. The operating company and service node vendor are responsible for engineering the number of voice links to be used for a given node.

For TOPSVL trunk types, field DIR is added.

The following table shows the datafill specific to OSSAIN 07 Enhancements for table TRKGRP. Only those fields that apply directly to OSSAIN 07 Enhancements are shown. For a description of the other fields, refer to the data schema section of this document.

Datafilling table TRKGRP

Field	Subfield or refinement	Entry	Explanation and action
GRPINFO	GRPTYP	TOPSVL	Group type. The dedicated voice trunks for OSSAIN must be trunk group type TOPSVL.
	DIR	OG or IC	Direction. This is a new field for TOPSVL trunk group types. Datafill trunks according to the node type as follows: • Standalone - Datafill OG for links to service nodes. • OSAC host - Datafill OG for links to OSAC remotes and service nodes. • OSAC remote - Datafill IC for the link to the OSAC host. This direction must match with the direction in table TRKSGRP.

Datafill example for table TRKGRP

The following example shows sample datafill for table TRKGRP.

MAP display example for table TRKGRP

```
GRPKEY                                              GRPINFO
-------------------------------------------------------------
OSSAINVL1            TOPSVL  31  NPDGP  NCRT  MIDL  OG
OSSAINVL2            TOPSVL  31  NPDGP  NCRT  MIDL  OG
```

Datafilling table TRKSGRP

This table is not changed. In the host, datafill trunk groups for voice channels to service nodes and remotes. In a remote, datafill a trunk group voice channel to the host. Voice channels to one or more service nodes can be combined in the same trunk group. The host-remote and host-service node links must have parallel datafill to ensure that both sides connect to the same voice circuit. The operating company and service node vendor are responsible for engineering the number of voice links to be used for a given node.

The following table shows the datafill specific to OSSAIN 07 Enhancements for table TRKSGRP. Only those fields that apply directly to OSSAIN 07 Enhancements are shown. For a description of the other fields, refer to the data schema section of this document.

Datafilling table TRSGRP

Field	Subfield or refinement	Entry	Explanation and action
SGRPVAR	SIGDATA	STD	Signaling data. Use standard signalling.
	DIR	OG or IC	Direction. For TOPSVL trunk group types. datafill trunks according to the node type as follows: • Standalone- Datafill OG for links to service nodes. • OSAC host - Datafill OG for links to OSAC remotes and service nodes. • OSAC remote - Datafill IC for the link to the OSAC host. This direction must match with the direction in table TRKGRP.

OSSAIN 07 Enhancements (continued)

Datafilling table TRSGRP

Field	Subfield or refinement	Entry	Explanation and action
	OPULSTYP	NP	Outgoing type of pulsing. Set to NP (No Pulse), because the DMS switch does not outpulse over trunks of group type TOPSVL.
	OSTARTSG	IM	Outgoing start dial signal. Set to IM (immediate).
	REMBSY	Y	Remote make busy. Set to Y. This field causes the voice trunk to go to the RMB state at the MAP display when the service node goes on hook towards the switch.

Datafill example for table TRKSGRP

The following example shows sample datafill for table TRKSGRP.

MAP display example for table TRKSGRP

```
SGRPKEY        CARDCODE     SGRPVAR
-------------------------------------------------------
OSSAINVL1  0   DS1SIG      STD OG NP IM 0 0 NO NO N N Y 70
OSSAINVL2  0   DS1SIG      STD OG NP IM 0 0 NO NO N N Y 70
```

Datafilling table TRKMEM

Table control for TRKMEM is changed so that deletions are disallowed if table OAVLMAP has a reference to the tuple being deleted.

This table is not changed. In the host, datafill trunk groups for voice channels to service nodes and remotes. In a remote, datafill a trunk group voice channel to the host. Voice channels to one or more service nodes can be combined in the same trunk group. The host-remote and host-service node links must have parallel datafill to ensure that both sides connect to the same voice circuit. The operating company and service node vendor are responsible for engineering the number of voice links to be used for a given node.

Datafill example for table TRKMEM

The following example shows sample datafill for table TRKMEM.

MAP display example for table TRKMEM

```
CLLI         EXTRKNM   SGRP    MEMVAR
-------------------------------------------------------
OSSAINVL1     2          0      DCM  0  0  21
OSSAINVL2     3          0      DCM  0  0  22
```

Error messages for table TRKMEM

The following error messages apply to table TRKMEM.

Error messages for table TRKMEM

Error message	Explanation and action
DELETE TRUNK MEMBER FROM TABLE OAVLMAP BEFORE DELETING IT FROM TABLE TRKMEM.	Tuples may not be deleted from table TRKMEM until all references to that tuple are removed from table OAVLMAP. This error message is displayed if an attempt is made to delete a tuple from TRKMEM that is referenced in table OAVLMAP.

Datafilling table OSCVLGRP

OSSAIN centralization Voice Link Group is a new table that identifies the voice link groups that are used by an OSAC host to connect to OSAC remote switches. A tuple is added in this table for each OSAC office that an OSAC host switch communicates with for OSAC call processing. The most idle selection sequence is used for selecting a voice link member from the group. This table is only used in the OSAC host.

Tables TRKGRP and OANODINV must be datafilled before table OSCVLGRP.

OSSAIN 07 Enhancements (continued)

The following is a description of the table:

Datafilling table OSCVLGRP

Field	Subfield or refinement	Entry	Explanation and action
NODENAME		node name from table OANODINV	Node name. This is the key into the table. This is the node name of a OSAC remote switch from table OANODINV that the OSAC host communicates. This node must be datafilled in table OANODINV as an OSAC switch.
CLLI		from table CLLI	Common language location identifier. This field is the voice link group between the OSAC host and the OSAC switch in field NODENAME.

Datafill example for table OSCVLGRP

The following example shows sample datafill for table OSCVLGRP.

MAP display example for table OSCVLGRP

```
NODENAME        CLLI
-------------------------------------------------------
OSAC_SW1        OSACVL1
OSAC_SW2        OSACVL2
OSAC_SW3        OSACVL3
OSAC_SW4        OSACVL4
```

Error messages for table OSCVLGRP

The following error messages apply to table OSCVLGRP.

Error messages for table OSCVLGRP

Error message	Explanation and action
`Only node ids of PM type OSAC can be datafilled in this table.`	Table OANODINV must be datafilled with the OSAC node name before being used in table OSCVLGRP. The node name must be datafilled as an OSAC switch. This error message is displayed if the NODEID is not datafilled in table OANODINV as an OSAC switch.

Error messages for table OSCVLGRP

Error message	Explanation and action
`This CLLI must be datafilled in Table TRKGRP before datafilling this table.`	The CLLI must be datafilled in table TRKGRP before being used in this table. This error message is displayed if the CLLI is not datafilled in table TRKGRP.
`Trunk group type for CLLI must be TOPSVL.`	The trunk group type for the CLLI must be TOPSVL since only trunks of that type can be used for host-remote voice connections. This error message is displayed if the trunk group is of another type.

Datafilling table OAVLMAP

Table OAVLMAP (OSSAIN Voice Link Mapping table) is used in making voice connections for OSSAIN calls. OAVLMAP maps the logical voice channel number to an actual voice link in a voice link group. In the host, datafill trunk groups for voice channels to service nodes and remotes. In a remote, datafill a trunk group voice channel to the host.

Voice connections between the host and a service node are made at the request of the service node by an OAP message. The service node must supply the logical voice channel number for the voice connection in the OAP message. This table maps the logical voice channel to an index in table TRKMEM.

Tables TRKMEM and OANODINV must be datafilled before table OAVLMAP.

Following is a description of the table:

Datafilling table OAVLMAP

Field	Subfield or refinement	Entry	Explanation and action
NDANDCH		see subfield NODENAME	Node and voice channel. This is the key to the table and consists of subfields NODENAME and VOICENUM.
	NODENAME	node name from table OANODINV	Node name. This is a key into the table. This is the service node name or OSAC switch from table OANODINV (field NODENAME) for this voice channel.

OSSAIN 07 Enhancements (continued)

Datafilling table OAVLMAP

Field	Subfield or refinement	Entry	Explanation and action
	VOICENUM	0 to 8191	Logical voice channel number. This is a key into the table. This field is the logical voice channel number received from the service node or remote. This number should match between the host and remote or service node.
CLLI		from table CLLI	Common language location identifier. This field is the first of the two part key into table TRKMEM. It is the trunk name for the voice connection between the host and service node or remote. The name should be previously defined in tables CLLI and TRKMEM. This name should match between the host and remote or service node.
EXTRKNM		0 to 9999	External trunk number. This field is the second of the two part key into table TRKMEM. This circuit must be previously datafilled in table TRKMEM. This number should match between the host and remote or service node.

Datafill example for table OAVLMAP

The following example shows sample datafill for table OAVLMAP.

MAP display example for table OAVLMAP in OSAC host (OSAC_SW0)

```
NDANDCH              CLLI        EXTRKNM
-------------------------------------------------------
OSAC_SW1   1         OSACVL1     1
OSAC_SW1   2         OSACVL1     2
OSAC_SW1   3         OSACVL1     3
OSAC_SW2   1         OSACVL2     1
OSAC_SW2   2         OSACVL2     2
OSAC_SW3   1         OSACVL3     1
OSAC_SW3   2         OSACVL3     2
OSAC_SW3   3         OSACVL4     3
OSAC_SW3   4         OSACVL4     4
```

MAP display example for table OAVLMAP in OSAC remote (OSAC_SW1)

```
NDANDCH              CLLI        EXTRKNM
-------------------------------------------------------
OSAC_SW0   1         OSACVL1     1
OSAC_SW0   2         OSACVL1     2
OSAC_SW0   3         OSACVL1     3
OSAC_SW5   1         OSACVL5     1
OSAC_SW5   2         OSACVL5     2
OSAC_SW5   3         OSACVL5     3
OSAC_SW10  1         OSACVL10    1
OSAC_SW10  2         OSACVL10    2
```

In the example tables above, if the host (OSAC_SW0) is making voice connections for the remote (OSAC_SW1), then the host selects trunk group OSACVL1 from table OSCVLGRP as follows:

MAP display example for table OSCVLGRP in host (only)

```
NODENAME        CLLI
-------------------------------------------------------
OSAC_SW1        OSACVL1
OSAC_SW2        OSACVL2
OSAC_SW3        OSACVL3
OSAC_SW4        OSACVL4
```

Next, the host selects the most idle voice link from that trunk group (for example, voice link 2 from OSACVL1). Table OAVLMAP maps the actual voice link group (OSACVL1 2) to the logical voice channel number for connecting to the remote (2 in the prior example of OAVLMAP in the host). Logical voice channel number 2 is sent to the remote. The remote uses table OAVLMAP to map the logical voice channel number 2 sent from the host to an actual voice link (OSACVL1 2).

OSSAIN 07 Enhancements (continued)

Error messages for table OAVLMAP

The following error messages apply to table OAVLMAP.

Error messages for table OAVLMAP

Error message	Explanation and action
`This CLLI and external trunk name must be datafilled in table TRKMEM before datafilling this table.`	This message is displayed if an attempt is made to datafill a CLLI and EXTRKNM in table OAVLMAP before that voice circuit is defined in table TRKMEM. Table TRKMEM must be datafilled before table OAVLMAP.
`DELETE TRUNK MEMBER FROM TABLE OAVLMAP BEFORE DELETING IT FROM TABLE TRKMEM.`	This message is displayed if an attempt is made to delete a tuple from table TRKMEM that is referenced in table OAVLMAP. Tuples may not be deleted from table TRKMEM until all references to that voice circuit are deleted from table OAVLMAP.
`Trunk group type for CLLI must be TOPSVL.`	This message is displayed if an attempt is made to use a CLLI in table OAVLMAP that is not of trunk group type TOPSVL
`Tuples may not be deleted in table OANODINV until all references to that node name are removed from table OAVLMAP.`	This message is displayed if an attempt is made to datafill a node name in table OAVLMAP before that node name is defined in table OANODINV. Table OANODINV must be datafilled before table OAVLMAP.
`Only nodes of PM type OSNM or OSAC may have datafill in this table.`	This error message is displayed if an attempt is made to datafill a tuple for an OSN node.
`OSAC nodes must have a relation of OTHER in table OANODINV.`	This error message is displayed if an attempt is made to datafill a tuple with an OSAC node with relation of SELF in table OANODINV.
`TOPSVL must be datafilled as outgoing for OSNM nodes.`	This error message is displayed if an attempt is made to datafill an OSNM node with a voice link not datafilled as outgoing in table TRKSGRP.
`CLLI and external trunk name is already datafilled against this OSAC node.`	This message is displayed of an attempt is made to datafill the same CLLI/external trunk name combination against an OSAC node.

Datafilling table CONF3PR

This table is not changed. In each OSAC remote, allocate a circuit for each remote-host voice link. If a remote is centralized to two hosts, then two circuit would be defined.

Datafill example for table CONF3PR

The following example shows sample datafill for table CONF3PR.

MAP display example for table CONF3PR

```
CNFCKTNO GRPCLLI EXTRKNM TMTYPE TMNO TMCKTNO CARDCODE PADGRP
-------------------------------------------------------------------
0        CF3P    0       MTM    0    22      1X31AA   CONF
```

Datafilling table STDPRTCT.STDPRT

The following table shows the datafill specific to OSSAIN 07 Enhancements for subtable STDPRTCT.STDPRT. Only those fields that apply directly to OSSAIN 07 Enhancements are shown. For a description of the other fields, refer to the data schema section of this document.

Datafilling table STDPRTCT.STDPRT

Field	Subfield or refinement	Entry	Explanation and action
			This table is not changed. The following information applies to calls received on TOPS trunks with field SIGTYPE set to either COMFGD or EAOSS.
	PRERTSEL	T	Pretranslator route selector. For proper routing of DD dialed calls, use the T selector.
	POS	TOPS	Position. In order for translations to mark a DD signalled call as OA, field POS must be set to TOPS. This value routes the call to table QMSTOPS for selection of QMS and later selection of OSSAN. Otherwise, the call tandems through the TOPS office.

Datafill example for table STDPRTCT.STDPRT

The following example shows sample datafill for table STDPRTCT.STDPRT.

MAP display example for table STDPRTCT.STDPRT

```
 FROMDIGS        TODIGS
                                                  PRETRTE
-------------------------------------------------------
2122205555    2122205555
                          T OA 0  TOPS  DD   10 10  TOPS
```

OSSAIN 07 Enhancements (continued)

The above example show the required datafill to override a call received with called digits 2122205555 signalled as DD and then marked as OA.

Datafilling table QAPLNDEF

The following table shows the datafill specific to OSSAIN 07 Enhancements for table QAPLNDEF. Only those fields that apply directly to OSSAIN 07 Enhancements are shown. For a description of the other fields, refer to the data schema section of this document.

Datafilling table QAPLNDEF

Field	Subfield or refinement	Entry	Explanation and action
APLNAME		OSSAIN	QMS Application. Datafill OSSAIN for the new OSSAIN call and agent queues.

Datafill example for table QAPLNDEF

The following example shows sample datafill for table QAPLNDEF.

MAP display example for table QAPLNDEF

```
APLNAME  CALLQS  CQELEMS  AGENTQS  NUMAGNTS  CTSEARCH
---------------------------------------------------------
TOPS     255     3000     127      170        0
OSSAIN   220     5000     100      1500       0
```

Datafilling table QMSCQDEF

The following table shows the datafill specific to OSSAIN 07 Enhancements for table QMSCQDEF. Only those fields that apply directly to OSSAIN 07 Enhancements are shown. For a description of the other fields, refer to the data schema section of this document.

Datafilling table QMSCQDEF

Field	Subfield or refinement	Entry	Explanation and action
APPLNCQ	APLNAM	OSSAIN	Application name. Datafill OSSAIN for the new OSSAIN call and agent queues. Note, OSSAIN call queues are independent of existing operator call queues.

OSSAIN 07 Enhancements (continued)

Datafill example for table QMSCQDEF

The following example shows sample datafill for table QMSCQDEF.

MAP display example for table QMSCQDEF

```
APPLNCQ    CQPRIO  CQAGS  CQMAXSIZ  DEFLAREA     PRAQAREA
-------------------------------------------------------
TOPS 0      20      18     300       Y 600 5      Y 4 100
OSSAIN 0    20      18      0         N            N
OSSAIN 1    20      10      0         N            N
OSSAIN 2    35      18     300        Y 1200 5     N
OSSAIN 3    35      10     240        Y 1500 5     N
```

In the above example, call queues OSSAIN 0 and OSSAIN 1 are set up to disallow queuing of calls by setting CQMAXSIZ=0. On the other hand, OSSAIN 2 and OSSAIN 3 are set up to provide queuing capability for the functions associated with these call queues.

Datafilling table QMSTOPS

The following table shows the datafill specific to OSSAIN 07 Enhancements for table QMSTOPS. Only those fields that apply directly to OSSAIN 07

OSSAIN 07 Enhancements (continued)

Enhancements are shown. For a description of the other fields, refer to the data schema section of this document.

Datafilling table QMSTOPS

Field	Subfield or refinement	Entry	Explanation and action
	CO	UNSPEC, OH, OA, DD, DELAY, 555, TS, TSUB, 211, 311, 411, 511, 611, 711, 811, 911, 999, HOM555, FOR555, SPARE1, SPARE2, SPARE3, SPARE4, SPARE5, INTS	Call origination type. OSSAIN supports a limited number of call origination types. QMS table QMSTOPS assigns an initial call queue according to the call origination type. Therefore, starting with table QMSTOPS, datafill the QMS tables to route only supported call types through QMS to OSSAIN. Otherwise, unsupported call types routed to OSSAIN are sent to treatment. The supported call types are the following: • UNSPEC (unspecified) • OH (operator handled, 0-) • OA (operator assisted) • DD (direct dialed, 0+) • DELAY • 555 • TS (toll station) • TSUB (toll subscriber) • 211, 311, 411, 511, 611, 711, 811, 911, 999 • HOM555 (home 555) • FOR555 (foreign 555) • SPARE1, SPARE2, SPARE3, SPARE4, SPARE5 • INTS (service intercept)

Datafill example for table QMSTOPS

The following example shows sample datafill for table QMSTOPS.

MAP display example for table QMSTOPS

```
CO      CT4Q
------------------------------------------------------------
OH      0_MINUS
```

Datafilling table CT4QNAMS

In TOPS07, new refinements OAINPRE and OPRSYS are added.

In TOPS06, new field SYSAREA is added to indicate the service system: OSSAIN or the existing TOPS operator. Calls marked for OSSAIN are routed through the QMS refinement tables. Therefore, new QMS refinement tables for OSSAIN must be datafilled. The CT4Qs used for OSSAIN must first be defined in table CT4QNAMS. OSSAIN tables OAINCTLA and OAFUNDEF use the CT4Qs assigned in this table.

Existing fields CT4QDISP and AUTOORDB are changed to subfields under new field SYSAREA.

the following is a description of all the fields.

Datafilling table CT4QNAMS

Field	Subfield or refinement	Entry	Explanation and action
CT4QNUM		0 to 2046	CT4Q number. This is the first and key field of the table. This field is not changed. Enter a value from 0 to 2046 for use as an index associated with the CT4Q.
CT4QNAME		alphanumeric (1 to 32 characters)	CT4Q name. Enter the name used in all the other call queue assignment (CQA) tables. This field is not changed. UNSPEC and CAMA are the default entries. Entries datafilled in field CT4QNAME appear in other CQA tables.
NOAMA		Y or N	No automatic message accounting indicator. Enter Y (yes) to activate the AMA indicator. This field is not changed. Enter N (no) to not activate the AMA indicator.
SYSAREA		see subfield	System area. This field consists of subfield SYSAREA_SEL and its refinements.

OSSAIN 07 Enhancements (continued)

Datafilling table CT4QNAMS

Field	Subfield or refinement	Entry	Explanation and action
	SYSAREA_SEL	TOPSOPR or OSSAIN	System area select. After a call is routed through QMS to a final call queue, this field directs the call to one of the following: • TOPSOPR - TOPS operator. Datafill subfields CT4QDISP, AUTOORDB, and OAINPRE. • OSSAIN - OSSAIN service node. Datafill table OAINCTLA. No further fields must be datafilled.
	CT4QDISP	see subfield	CT4Q display. Datafill this field if SYSAREA_SEL = TOPSOPR. CT4QDISP consists of subfields CT4QDISP_SEL.
	CT4QDISP_SEL	Y or N	CT4Q display selector. Enter Y if a special CT4Q display is required and datafill refinement DISPLAY. Enter N if a special CT4Q display is not required.
	DISPLAY	1 to 8 characters	Display. If the entry in field CT4QDISP_SEL is Y, datafill this refinement. Enter a one- to eight-character vector.
	AUTOORDB	see subfield	Automated operator reference database. Datafill this field if SYSAREA_SEL = TOPSOPR. Field AUTOORDB consists of subfields AUTOORDB_SEL.
	AUTOORDB_SEL	Y or N	AUTOORDB Selector. Enter Y if optional auto-ORDB index is required and datafill refinement ORDBVAL. Enter N if optional auto-ORDB index is not required.
	ORDBVAL	0 to 100	Order B value. If the entry in field AUTOORDB_SEL is Y, datafill this refinement. Enter a value from 0 to 100 that represents the index number.

Datafilling table CT4QNAMS

Field	Subfield or refinement	Entry	Explanation and action
	OAINPRE	Y or N	OSSAIN preprocessing. Datafill this field if SYSAREA_SEL = TOPSOPR. Enter Y to enable preprocessing and datafill refinement OPRSYS. Otherwise, enter N and no further refinements require datafill. The applied function for OSSAIN preprocessing is selected in table OAINPRE. For a description of OSSAIN preprocessing, refer to table OAINPRE.
	OPRSYS	set of {OPR, MCCS, ACTS, AABS, ADAS} or ALL	Operator system. Enter the set of TOPS systems that OSSAIN preprocessing is to be applied. Note, value NONE appears on the MAP display but is not valid. The values are defined as follows: • OPR - Operator • MCCS - Mechanized Calling Card Service • ACTS - Automatic Coin Toll Service • AABS - Automated Alternate Billing Service • ADAS - Automated Directory Assistance Service

Datafill example for table CT4QNAMS

The following example shows sample datafill for table CT4QNAMS.

MAP display example for table CT4QNAMS

```
CT4QNUM  CT4QNAME  NOAMA  SYSAREA
-------------------------------------------------------
0        UNSPEC    N      TOPSOPR  N  N  N
1        DA_411    N     TOPSOPR  Y 411_OPR N Y ACTS MCCS
2        0+YELLOW  N      OSSAIN
3        OSS_DA    N      OSSAIN
4        PCS_OPR   N      TOPSOPR  Y PCSOPR N Y OPR
```

OSSAIN 07 Enhancements (continued)

Error messages for table CT4QNAMS

The following error messages apply to table CT4QNAMS.

Error messages for table CT4QNAMS

Error message	Explanation and action
`An OPRSYS value other than NONE must be specified.`	If field OAINPRE = Y, field OPRSYS should not be set to NONE. If this entry is attempted, this error is displayed.

Datafilling QMS tables

Calls marked for OSSAIN are routed through QMS, including optional refinements tables. Therefore, new dedicated queues for OSSAIN must be datafilled. Refer to the Host QMS functionality, ADVQ0003, for further details.

Table CT4QAUTO, a refinement table, must contain datafill (cannot be empty) when using automated services. Otherwise, an automated system may request further assistance and return the call to the incorrect service type. This causes SWERS and TQMS logs. Refer to the “Remote Queue Management System" functionality, table CT4QAUTO in the datafill procedure section for further details.

Tables TQORDERA and TQORDERB must be datafilled after the refinement tables. Otherwise, changing the TQORDER tables before finalizing the CT4Q refinement tables can cause incorrect routing of some calls.

Datafilling table OQCQPROF

OSSAIN QMS Call Queue Profile is a new table in release TOPS06 that associates lists of OSSAIN QMS call queues with a call queue profile number. Session pools in OASESNPL can then be associated with one of those profile numbers in table OQCQPROF.

This table is very similar to its TOPS counterpart, table TQCQPROF (TOPS QMS Call Queue Profiles table). The only difference between the tables is that table TQCQPROF contains field DLAYCT4Q which is not required for OSSAIN.

Call queue profiles are specified in one of two ways:

- Using office-wide priority and office-wide assignable grade of service (AGS) values (see field PRIOTYPE set to OFC).
- Using profile-specific priority and profile-specific assignable grade of service (AGS) values (see field PRIOTYPE set to PROF).

Call queue profiles datafilled using office-wide priorities contain a list of up to 255 call queues (field CQLIST). Each call queue is specified as a value in the range CQ0 to CQ254. The priority and AGS associated with each of the call queues specified are the office-wide values defined for the queue in table QMSCQDEF. Office-wide priority call queue profiles result in consistent office-wide priorities and AGS values being applied to all operators.

If the operating company wishes to override the system priority and AGS associated with each call queue, the particular profile is datafilled using priority and AGS values specific to that profile. For each of up to four priority levels (labeled PRIO3, PRIO2, PRIO1, and PRIO0, with PRIO3 being the highest priority level), a list of up to 32 call queues along with the desired AGS for each is specified.

Table QAPLNDEF must be datafilled before table OQCQPROF. Note that the AGENTQ and CALLQ values in table OQCQPROF are limited by the datafill for the OSSAIN application in table QAPLNDEF.

The following is a description of the table.

Datafilling table OQCQPROF

Field	Subfield or refinement	Entry	Explanation and action
CQPROFNM		0 to 254	Call queue profile number. This number is used in table OASESNPL.
AGENTQ		AQ0 to AQ254 (upper value limited by AGENTQS in QAPLNDEF)	OSSAIN QMS agent queue. Enter the agent queue number for operators that are idle and available to handle calls with this profile number. When an agent is requested from the QMS CAM, the agent queues are searched for an agent that has the requested call queue in its profile. Any number of agent queues can be used, but a good starting point would be to have one agent queue for each call queue profile datafilled in table OQCQPROF. The range of agent queues is limited by the value datafilled in field AGENTQS of table QAPLNDEF. For example, if AGENTQS is set to 10, then in table OQCQPROF only queues AQ0 to AQ9 should be datafilled.
PRIOAREA		see subfield PRIOTYPE	Call queue priority type selector. This field consists of subfield PRIOTYPE.

OSSAIN 07 Enhancements (continued)

Datafilling table OQCQPROF

Field	Subfield or refinement	Entry	Explanation and action
	PRIOTYPE	OFC or PROF	Call queue priority type. Enter OFC for office-wide call queue and datafill refinement CQLIST. Enter PROF for profile call queue and datafill refinements PRIO3, PRIO2, PRIO1, and PRIO0. Up to four multiples of each specified priority levels PRIO3 (highest priority), PRIO2, PRIO1, and PRIO0 (lowest priority) can be datafilled. If less than four multiples are required, end the list with a $ (dollar sign). If PRIOTYPE = OFC, datafill refinement CQLIST. If PRIOTYPE = PROF, datafill refinements PRIO3, PRIO2, PRIO1, and PRIO0.
	CQLIST	CQ0 to CQ254 (upper value limited by CALLQS in QAPLNDEF)	Call queue list. If the entry in subfield PRIOTYPE is OFC, datafill this refinement. Enter a value for each call queue to be included in the profile. No further refinements require datafill. The range of call queues is limited by the value datafilled in field CALLQS of table QAPLNDEF. For example, if CALLQS is set to 10, then in table OQCQPROF only queues AQ0 to AQ9 should be datafilled.
	PRIO3	see subfields CALLQ and AGS	Priority level 3. If the entry in subfield PRIOTYPE is PROF, datafill this refinement. This field is the highest priority level and consists of subfields CALLQ and AGS.
	CALLQ	CQ0 to CQ254 (upper value limited by CALLQS in QAPLNDEF)	Call queue. If the entry in subfield PRIOTYPE is PROF, datafill this refinement. Enter up to 32 call queues to be included in the profile. If less than 32 queues are required, end the list with a $ (dollar sign). The range of call queues is limited by the value datafilled in field CALLQS of table QAPLNDEF. For example, if CALLQS is set to 10, then in table OQCQPROF only queues AQ0 to AQ9 should be datafilled.

Datafilling table OQCQPROF

Field	Subfield or refinement	Entry	Explanation and action
	AGS	10 to 80	Assignable grade of service. If the entry in subfield PRIOTYPE is PROF, datafill this refinement. Enter the aging factors from 1.0X to 8.0X for the grade of service to be applied to the call queue (refinement CALLQ) for the purposes of this profile. Specify 10 for no aging.
	PRIO2	see subfields CALLQ and AGS	Priority level 2. If the entry in subfield PRIOTYPE is PROF, datafill this refinement. This field is the second highest priority level and consists of subfields CALLQ and AGS.
	CALLQ	CQ0 to CQ254 (upper value limited by CALLQS in QAPLNDEF)	Call queue. If the entry in subfield PRIOTYPE is PROF, datafill this refinement. Enter up to 32 call queues to be included in the profile. If less than 32 queues are required, end the list with a $ (dollar sign). The range of call queues is limited by the value datafilled in field CALLQS of table QAPLNDEF. For example, if CALLQS is set to 10, then in table OQCQPROF only queues AQ0 to AQ9 should be datafilled.
	AGS	10 to 80	Assignable grade of service. If the entry in subfield PRIOTYPE is PROF, datafill this refinement. Enter the aging factors from 1.0X to 8.0X for the grade of service to be applied to the call queue (refinement CALLQ) for the purposes of this profile. Specify 10 for no aging.
	PRIO1	see subfields CALLQ and AGS	Priority level 1. If the entry in subfield PRIOTYPE is PROF, datafill this refinement. This field is the third highest priority level and consists of subfields CALLQ and AGS.

OSSAIN 07 Enhancements (continued)

Datafilling table OQCQPROF

Field	Subfield or refinement	Entry	Explanation and action
	CALLQ	CQ0 to CQ254 (upper value limited by CALLQS in QAPLNDEF)	Call queue. If the entry in subfield PRIOTYPE is PROF, datafill this refinement. Enter up to 32 call queues to be included in the profile. If less than 32 queues are required, end the list with a $ (dollar sign). The range of call queues is limited by the value datafilled in field CALLQS of table QAPLNDEF. For example, if CALLQS is set to 10, then in table OQCQPROF only queues AQ0 to AQ9 should be datafilled.
	AGS	10 to 80	Assignable grade of service. If the entry in subfield PRIOTYPE is PROF, datafill this refinement. Enter the aging factors from 1.0X to 8.0X for the grade of service to be applied to the call queue (refinement CALLQ) for the purposes of this profile. Specify 10 for no aging.
	PRIO0	see subfields CALLQ and AGS	Priority level 0. If the entry in subfield PRIOTYPE is PROF, datafill this refinement. This field is the lowest priority level and consists of subfields CALLQ and AGS.
	CALLQ	CQ0 to CQ254 (upper value limited by CALLQS in QAPLNDEF)	Call queue. If the entry in subfield PRIOTYPE is PROF, datafill this refinement. Enter up to 32 call queues to be included in the profile. If less than 32 queues are required, end the list with a $ (dollar sign). The range of call queues is limited by the value datafilled in field CALLQS of table QAPLNDEF. For example, if CALLQS is set to 10, then in table OQCQPROF only queues AQ0 to AQ9 should be datafilled.
	AGS	10 to 80	Assignable grade of service. If the entry in subfield PRIOTYPE is PROF, datafill this refinement. Enter the aging factors from 1.0X to 8.0X for the grade of service to be applied to the call queue (refinement CALLQ) for the purposes of this profile. Specify 10 for no aging.

Datafill example for table OQCQPROF

The following example shows sample datafill for table OQCQPROF.

MAP display example for table OQCQPROF

```
CQPROFNM  AGENTQ                                    PRIOAREA
--------------------------------------------------------------
0         AQ0        OFC (CQ0)$
1         AQ1        OFC (CQ1)$
2         AQ3        OFC (CQ0)(CQ1)$
3         AQ4        PROF (CQ0 10)(CQ1 80)$ (CQ2 10)$
```

In the above example, call queue profile number 0 is used for agents that serve CQ0. From table OAFUNDEF sample datafill in this section, the BRANDING function is associated with CQ0. From table OASESNPL, both the BRAND_NODE1 and BRAND_NODE2 session pools are datafilled as using call queue profile number 0 (field OCQPROF). Since the MAXSESN field for each of those session pools is set to 100, there are 200 agents placed in agent queue AQ0, waiting to serve calls from CQ0 (the BRANDING function).

Error messages for table OQCQPROF

The following error messages apply to table OQCQPROF.

Error messages for table OQCQPROF

Error message	Explanation and action
`At least one call queue must be specified.`	When adding a tuple to table OQCQPROF, at least one call queue must be provided.
`A call queue may not appear in more than one priority level.`	This message is displayed if an attempt is made to datafill the same call queue in more than one priority level.
`A call queue has been specified in the same priority level with different AGS values.`	This message is displayed if an attempt is made to datafill the same call queue in the same priority level with different AGS values.

`This call queue profile is in use in table OASESNPL.`
 	
`You must remove all references to this profile before you can delete it.`
	Tuples may not be deleted in table OQCQPROF until all references to that call queue profile are removed from table OASESNPL. These error messages are displayed if an attempt is made to delete a call queue profile from table OQCQPROF that is in use in table OASESNPL.

`Unable to change call queue profile. Check QMS logs and SWERRS.`	This error message can occur when changing a tuple in table OQCQPROF and an error occurs when trying to update the profile in the QMS CAM.

OSSAIN 07 Enhancements (continued)

Datafilling table OASESNPL

Table OSSAIN Session Pool was a new table in TOPS06 that defines the attributes of session pools for OSSAIN calls. A session pool is a grouping of sessions on a particular service node that all serve the same function (service) or functions.

In release TOPS07, this table is modified to define host-remote session pools. Table control restricted this previously. Also, changes are made to datafill the switch type for a subscriber originated session pool as a remote, host, or standalone-host.

Table OANODINV must be datafilled with the node name as an OSAC node before being used in table OASESNPL.

Parallel datafill is required between the nodes as follows:

- Host-remote session - Datafill must match between the host and remote except for field ORIGTYPE which should be set to OSACORIG in the remote and OSACTERM in the host.
- Switch-service node session - Datafill must match between all three nodes: the host, remote (if OSAC), and service node except for field SWITCHTYP and refinements.

The following is a description of the table:

Datafilling table OASESNPL

Field	Subfield or refinement	Entry	Explanation and action
SESNPLID		0 to 4094	Session pool identification. Key to table.
SESNPLNM		1 to 16 characters	Session pool name. Enter a unique name that describes the session pool.
MAXSESN		0 to 1023	Maximum sessions. This number indicates the maximum number of simultaneous calls that can be handled by the node for this session pool.
NODENAME		from table OANODINV	Node name. Enter a node name from table OANODINV.
ORIGAREA		see subfield ORIGTYPE	Origination type area. This field consists of subfield ORIGTYPE and refinements.

OSSAIN 07 Enhancements (continued)

Datafilling table OASESNPL

Field	Subfield or refinement	Entry	Explanation and action
	ORIGTYPE	SUBSCRIBER SN, OSACORIG, OSACTERM	Origination type. This field identifies how the sessions in the session pool are selected. Following are descriptions of the values: • SUBSCRIBER - This session is selected by the switch for communication with a service node. This value is used for OSSAIN calls originated by a subscriber. Datafill subfield SWTCHTYP_AREA and refinements. The NODENAME must be datafilled in table OANODINV with field ONPMTYPE as OSN or OSNM. • SN - This value is used for calls originated by a service node. This is useful for Message Delivery where a service node would spin up a call in the switch in order to deliver a message to the subscriber, much like an operator delay call. Datafill subfields ONHKTMR_SEL, CALLTMR_SEL, and PROTAREA. The NODENAME must be datafilled in table OANODINV with field ONPMTYPE as OSN or OSNM. • OSACORIG - This switch uses the session pool to originate host-remote sessions. For example, this switch is an OSAC remote and uses the session pool to initiate a host-remote session with an OSAC host. No further datafill is required. Fields SESNPLID and MAXSESN must match between the host and remote. The NODENAME must be datafilled in table OANODINV with field ONPMTYPE as OSAC.

OSSAIN 07 Enhancements (continued)

Datafilling table OASESNPL

Field	Subfield or refinement	Entry	Explanation and action
	ORIGTYPE (continued)		Origination type (continued). • OSACTERM - This switch uses the session pool to respond to another switch that initiated a host-remote session with this switch. For example, this switch is an OSAC host and an OSAC remote initiated a session with this host using this session pool. No further datafill is required. Fields SESNPLID and MAXSESN must match between the host and remote. The NODENAME must be datafilled in table OANODINV with field ONPMTYPE as OSAC.

If ORIGTYPE = SUBSCRIBER, datafill subfield SWTCHTYP_AREA and refinements.

Datafilling table OASESNPL (ORIGTYPE = SUBSCRIBER)

Field	Subfield or refinement	Entry	Explanation and action
	SWTCHTYP_AREA	see subfield SWTCHTYP	Switch type area. This field consists of subfield SWTCHTYP.
	SWTCHTYP	S, SH, R	Switch type. If ORIGTYPE = SUBSCRIBER, datafill this field and refinements. This field is the role of the TOPS switch in routing and queuing for this session pool, defined as follows: • S - The switch is acting as a stand-alone for this session pool. Datafill subfields ONHKTMR_SEL, CALLTMR_SEL, TRIGGER_AREA, and PROTAREA. • SH - The switch is acting as either a stand-alone or OSAC host for this session pool. Datafill subfields ONHKTMR_SEL, CALLTMR_SEL, TRIGGER_AREA, and PROTAREA. • R - The switch is acting as an OSAC remote for this session pool. Datafill subfields ONHKTMR_SEL, CALLTMR_SEL, TRIGEVNT, and PROTAREA.

If ORIGTYPE = SUBSCRIBER and SWTCHTYP = S or SH, datafill subfields ONHKTMR_SEL, CALLTMR_SEL, TRIGGER_AREA, and PROTAREA.

Datafilling table OASESNPL (ORIGTYPE = SUBSCRIBER and SWTCHTYP = S or SH)

Field	Subfield or refinement	Entry	Explanation and action
	ONHKTMR_ SEL	see subfield ONHKTMR	On-hook sanity timer selector. This field consists of subfield ONHKTMR.
	ONHKTMR	USEDEFLT or OVERRIDE	On-hook sanity timer for this session pool. This sanity timer is initiated when the switch detects that a subscriber has gone on-hook. The values are defined as follows: • USEDEFLT - The on-hook sanity timer value is in table OAINPARM parameter CALL_SANITY_TIMER_DURATION. • OVERRIDE - The on-hook sanity timer value is specified in following field TIMERVAL. Datafill refinement TIMERVAL.
	TIMERVAL	1 to 3600	Timer value. Datafill this field if field ONHKTMR = OVERRIDE. Enter the on-hook sanity timer value.
	CALLTMR_ SEL	see subfield CALLTMR	Call sanity timer selector. This field consists of subfield CALLTMR.
	CALLTMR	USEDEFLT or OVERRIDE	Call sanity timer for this session pool. This sanity timer is initiated when no subscribers are connected to the call. The values are defined as follows: • USEDEFLT - The call sanity timer value is from table OAINPARM parameter CALL_SANITY_TIMER_DURATION. • OVERRIDE - The call sanity timer value is specified in following field TIMERVAL. Datafill refinement TIMERVAL.
	TIMERVAL	1 to 3600	Timer value. Datafill this field if field CALLTMR = OVERRIDE. Enter the call sanity timer value.
	TRIGGER_ AREA	see subfield	Trigger area. This field consists of subfield TRIGEVNT

OSSAIN 07 Enhancements (continued)

Datafilling table OASESNPL (ORIGTYPE = SUBSCRIBER and SWTCHTYP = S or SH)

Field	Subfield or refinement	Entry	Explanation and action
	TRIGEVNT	Y or N	Trigger event. The value are defined in the following: • Y - This session pool is only used for trigger event inform messages. No agent data is allocated. Datafill this session pool name in table OAFUNDEF, field TRIGPOOL. • N - This session pool is used for subscriber originations and trigger event information. Datafill refinement OCQPROF.
	OCQPROF	from table OQCQPROF	OSSAIN call queue profile number. Datafill this field if field TRIGEVNT = N. This is an index into table OQCQPROF that must be previously defined in table OQCQPROF.
	PROTAREA	see subfield PROTOCOL	Protocol area. This field consists of subfield PROTOCOL.
	PROTOCOL	UDP	Protocol. This field specifies the transport protocol to communicate between the switch and service node or between OSAC switches using this session pool. The only valid value is UDP. Datafill refinement fields CPPORT and MTCPORT.
	CPPORT	1024 to 32767	Call processing port. This is the UDP port number that the service node uses to receive call processing messages for this session pool. Refer to service node documentation or the developer for port number assignment.
	MTCPORT	1024 to 32767	Session pool maintenance port. This field is the UDP port number that the service node uses to receive maintenance messages for this session pool. Refer to service node documentation or the developer for port number assignment.

If ORIGTYPE = SUBSCRIBER and SWTCHTYP = R, datafill subfields ONHKTMR_SEL, CALLTMR_SEL, TRIGEVNT, and PROTAREA.

Datafilling table OASESNPL (ORIGTYPE = SUBSCRIBER and SWTCHTYP = R)

Field	Subfield or refinement	Entry	Explanation and action
	ONHKTMR_ SEL	see subfield ONHKTMR	On-hook sanity timer selector. This field consists of subfield ONHKTMR.
	ONHKTMR	USEDEFLT or OVERRIDE	On-hook sanity timer for this session pool. This sanity timer is initiated when the switch detects that a subscriber has gone on-hook. The values are defined as follows: • USEDEFLT - The on-hook sanity timer value is in table OAINPARM parameter CALL_SANITY_TIMER_DURATION. • OVERRIDE - The on-hook sanity timer value is specified in following field TIMERVAL. Datafill refinement TIMERVAL.
	TIMERVAL	1 to 3600	Timer value. Datafill this field if field ONHKTMR = OVERRIDE. Enter the on-hook sanity timer value.
	CALLTMR_ SEL	see subfield CALLTMR	Call sanity timer selector. This field consists of subfield CALLTMR.
	CALLTMR	USEDEFLT or OVERRIDE	Call sanity timer for this session pool. This sanity timer is initiated when no subscribers are connected to the call. The values are defined as follows: • USEDEFLT - The call sanity timer value is from table OAINPARM parameter CALL_SANITY_TIMER_DURATION. • OVERRIDE - The call sanity timer value is specified in following field TIMERVAL. Datafill refinement TIMERVAL.
	TIMERVAL	1 to 3600	Timer value. Datafill this field if field CALLTMR = OVERRIDE. Enter the call sanity timer value.

OSSAIN 07 Enhancements (continued)

Datafilling table OASESNPL (ORIGTYPE = SUBSCRIBER and SWTCHTYP = R)

Field	Subfield or refinement	Entry	Explanation and action
	TRIGEVNT	Y or N	Trigger event. The value are defined in the following: • Y - This session pool is only used for trigger event information. No agent data is allocated. Datafill this session pool name in table OAFUNDEF, field TRIGPOOL. • N - This session pool is used for subscriber originations and trigger event information.
	PROTAREA	see subfield PROTOCOL	Protocol area. This field consists of subfield PROTOCOL.
	PROTOCOL	UDP	Protocol. This field specifies the transport protocol to communicate between the switch and service node or between OSAC switches using this session pool. The only valid value is UDP. Datafill refinement field CPPORT.
	CPPORT	1024 to 32767	Call processing port. This is the UDP port number that the service node uses to receive call processing messages for this session pool. Refer to service node documentation or the developer for port number assignment.

If ORIGTYPE = SN, datafill subfields ONHKTMR_SEL, CALLTMR_SEL, and PROTAREA.

Datafilling table OASESNPL (ORIGTYPE = SN

Field	Subfield or refinement	Entry	Explanation and action
	ONHKTMR_ SEL	see subfield ONHKTMR	On-hook sanity timer selector. This field consists of subfield ONHKTMR.
	ONHKTMR	USEDEFLT or OVERRIDE	On-hook sanity timer for this session pool. This sanity timer is initiated when the switch detects that a subscriber has gone on-hook. The values are defined as follows: • USEDEFLT - The on-hook sanity timer value is in table OAINPARM parameter CALL_SANITY_TIMER_DURATION. • OVERRIDE - The on-hook sanity timer value is specified in following field TIMERVAL. Datafill refinement TIMERVAL.
	TIMERVAL	1 to 3600	Timer value. Datafill this field if field ONHKTMR = OVERRIDE. Enter the on-hook sanity timer value.
	CALLTMR_ SEL	see subfield CALLTMR	Call sanity timer selector. This field consists of subfield CALLTMR.
	CALLTMR	USEDEFLT or OVERRIDE	Call sanity timer for this session pool. This sanity timer is initiated when no subscribers are connected to the call. The values are defined as follows: • USEDEFLT - The call sanity timer value is from table OAINPARM parameter CALL_SANITY_TIMER_DURATION. • OVERRIDE - The call sanity timer value is specified in following field TIMERVAL. Datafill refinement TIMERVAL.
	TIMERVAL	1 to 3600	Timer value. Datafill this field if field CALLTMR = OVERRIDE. Enter the call sanity timer value.
	PROTAREA	see subfield PROTOCOL	Protocol area. This field consists of subfield PROTOCOL.

OSSAIN 07 Enhancements (continued)

Datafilling table OASESNPL (ORIGTYPE = SN

Field	Subfield or refinement	Entry	Explanation and action
	PROTOCOL	UDP	Protocol. This field specifies the transport protocol to communicate between the switch and service node or between OSAC switches using this session pool. The only valid value is UDP. Datafill refinement fields CPPORT and MTCPORT.
	CPPORT	1024 to 32767	Call processing port. This is the UDP port number that the service node uses to receive call processing messages for this session pool. Refer to service node documentation or the developer for port number assignment.
	MTCPORT	1024 to 32767	Session pool maintenance port. This field is the UDP port number that the service node uses to receive maintenance messages for this session pool. Refer to service node documentation or the developer for port number assignment. This field only appears if this table is in a host (standalone or OSAC), not in an OSAC remote.

Datafill example for table OASESNPL

The following example shows sample datafill for table OASESNPL in switch OSAC_0 that acts as a standalone and host.

MAP display example for table OASESNPL in host (OSAC_0)

```
SESNPLID SESNPLNM MAXSESN NODENAME
                                                                    ORIGAREA
------------------------------------------------------------------------------
1       BRAND1_H  10     BRAND_01
                       SUBSCRIBER SH USEDEFLT USEDEFLT  N 9 UDP 7001 7002
2       DEBIT_01  10     NODE2
                       SUBSCRIBER S USEDEFLT USEDEFLT   N 5 UDP 8001 8002
3       3WCLG_01  10     NODE3
                       SN USEDEFLT USEDEFLT UDP 9001 9002
4       REMOTE_1   20     OSAC_1
                        OSACTERM
5       REMOTE_2   20     OSAC_2
                        OSACTERM
```

The above tuples are described as follows:

- Tuple 1 - This is a service node session that the host uses in either a standalone or host configuration (SH). When used as a host, this session pool can also be used by remotes. When used as a standalone, OSAC_0 is the direct user of this service node.
- Tuple 2 - This is a service node session that is only used by the OSAC_0 in a standalone (S) configuration, That is, a remote does not use this service node.
- Tuple 3 - This is a service node session that the service node initiates to spin up a call to the switch.
- Tuples 4 and 5 - These are host-remote sessions with remotes OSAC_1 and OSAC_2, respectively. These sessions are initiated by the remotes to request sessions with service nodes defined in prior tuples.

The following example shows sample datafill for table OASESNPL in remote switch OSAC_1.

MAP display example for table OASESNPL in remote (OSAC_1)

```
SESNPLID SESNPLNM MAXSESN NODENAME  ORIGAREA
-------------------------------------------------------------------------
1        BRAND1_H  10     BRAND_01  SUBSCRIBER R USEDEFLT USEDEFLT
                                                          N UDP 7001
2         HOST_0   20      OSAC_0    OSACORIG
3        3WCLG_01  10     NODE3     SN USEDEFLT USEDEFLT UDP 9001 9002
```

The above tuples are described as follows:

- Tuple 1 - This is a service node session that is used by this remote. The session is obtained from a host.
- Tuple 2 - This is a host-remote session with host OSAC_0. This session is initiated by this remote to request a session with the service node in tuple 1.
- Tuple 3 - This is a service node session that the service node initiates to spin up a call to the switch.

OSSAIN 07 Enhancements (continued)

Error messages for table OASESNPL

The following error messages apply to table OASESNPL.

Error messages for table OASESNPL

Error message	Explanation and action
`OSSAIN session pool names must be unique.`	This message is displayed if an attempt is made to datafill field SESNPLNM with the same session pool name of another tuple.
`The session pool associated with this tuple must first be OFFLINE before this tuple can be changed.`	This message is displayed if an attempt is made to change a tuple while the session pool associated with that tuple is not OFFLINE
`The session pool associated with this tuple must first be OFFLINE before this tuple can be deleted.`	This message is displayed if an attempt is made to delete a tuple while the session pool associated with that tuple is not OFFLINE
`Field ORIGTYPE cannot be changed. You must delete this tuple first and then re-add with the new value.`	This message is displayed if an attempt is made to change field ORIGTYPE.
`Field SWTCHTYP cannot be changed. You must delete this tuple first and then re-add with the new value.`	This message is displayed if an attempt is made to change field SWTCHTYP.
`Field NODENAME cannot be changed. You must delete this tuple first and then re-add with the new value.`	This message is displayed if an attempt is made to change field NODENAME.
`You must datafill the call queue profile in table OQCQPROF before the index can be datafilled in this table.`	This message is displayed if an attempt is made to datafill field OCQPROF with a call queue profile not defined in table OQCQPROF.

`This session pool name is in use in Table OAFUNDEF.`
 	
`You must remove all references to this session pool before you can delete it.`
	Tuples may not be deleted from table OASESNPL until all references to that session pool name are removed from table OAFUNDEF. This error message is displayed if an attempt is made to delete a session pool from OASESNPL that is in use by table OAFUNDEF.

`Field TRIGEVNT cannot be changed. Delete this tuple first and re-add with the new value.`	The TRIGEVNT field cannot be changed without first deleting the tuple and re-adding it with the correct TRIGEVNT value. This error message is displayed if an attempt is made to change the TRIGEVNT field.

Datafilling table OAFUNDEF

Table OSSAIN Function Definition defines the functions used in processing OSSAIN calls. A function is a service or portion of a service provided by a service node, live operator, or an existing TOPS automated system.

Tables OANODINV, OASESNPL, and CT4QNAMS must be datafilled before table OAFUNDEF.

Table OAFUNDEF must be datafilled before tables OAFNDISP, OAFUNBLK, OACNNPRF, OATLKPRF, OADTFPRF, OACAUPRF, OADSCPRF, and OACTLDEF.

In TOPS07, table OAFUNDEF is modified to allow host-remote session pools to be specified if the function is provided by a centralized service node. That is, field HOSTNAME is replaced with field HRSESNPL. Also, field TRIGGER_AREA is added.

Tables OANODINV and OASESNPL must be datafilled before host-remote session pools can be used in table OAFUNDEF. A standard table control message is displayed if an attempt is made to datafill a session pool that is not datafilled in table OASESNPL.

Following is a description of the table:

Datafilling table OAFUNDEF

Field	Subfield or refinement	Entry	Explanation and action
FUNCID		0 to 1022	Function identification. This is the key into the table. This number must match between the host, remote (if OSAC), and service node.
FUNCNAME		1 to 16 characters	Function name. This value is used by other OSSAIN tables.
FUNCAREA		see subfield FUNCTYPE	Function area. This field consists of subfield FUNCTYPE and refinements.

OSSAIN 07 Enhancements (continued)

Datafilling table OAFUNDEF

Field	Subfield or refinement	Entry	Explanation and action
	FUNCTYPE	SN, TOPSOPER, TOPSAUTO	Function type. The function provider. Following are the values: • SN - service node. Datafill refinements ORIGSERV, TRIGGER_AREA, and CAMHERE. • TOPSAUTO - existing TOPS automated system. Datafill refinements AUTOSYS and OPRONFL. • TOPSOPER - a live operator. Datafill refinement OPRCT4Q.
	ORIGSERV	TASERV, DASERV, INTCSERV	Originating service. If FUNCTYPE = SN, datafill this refinement. This field is used to apply a base service to an OSSAIN call originating on the DMS switch and routed to an OSSAIN service node. Calls receiving DA or Intercept service are in a restricted mode while at the service node. DA and Intercept calls should only be routed to a service node to determine billing for the call prior to transferring the call to an operator. The service from the ORIGSERV field is not applied to calls originated by the service node and the service not applied to calls transferred by the service node or operator. Enter TASERV (for toll and assistance), DASERV (for directory assistance), or INTCSERV (for intercept).
	TRIGGER_AREA	see subfield	Trigger area. This field consists of refinement TRIGEVNT.
	TRIGEVNT	N or Y	Trigger event. Enter Y if a specific trigger event session pool is to be used for trigger event informs. Otherwise, enter N.
	TRIGPOOL	name from table OASESNPL	Trigger event session pool name. Datafill this field if field TRIGEVNT = Y. Enter a session pool name defined in table OASESNPL with TRIGEVNT=Y.

OSSAIN 07 Enhancements (continued)

Datafilling table OAFUNDEF

Field	Subfield or refinement	Entry	Explanation and action
	CAMHERE	N or Y	QMS CAM here. If FUNCTYPE = SN, datafill this refinement. This field indicates the location of the QMS CAM. The values are: • N (no) - QMS CAM is centralized at an OSAC host switch, not in this switch. Datafill refinement HRSESNPL. • Y (yes) - QMS CAM is located in this switch. Datafill refinement CALLQ.
	HRSESNPL	node name from table OANODINV	Host-remote session pool name. If CAMHERE=N, datafill this field with a session pool for OSAC messaging between the OSAC remote and OSAC host. This session pool is used by the remote to request the host for a service node session to a centralized service node that has the function for the call. The session pool name must be datafilled in table OASESNPL with ORIGTYPE = OSACORIG.
	CALLQ	call queue from table QMSCQDEF	Call queue. If CAMHERE=Y, datafill this field with a call queue defined in table QMSCQDEF.
	AUTOSYS	AABS	TOPS automated system. If FUNCTYPE = TOPSAUTO, datafill this refinement. This field indicates the existing TOPS automated system providing this function. The MAP display also shows values MCCS, ACTS, and BRANDING; however, only AABS is currently supported.

OSSAIN 07 Enhancements (continued)

Datafilling table OAFUNDEF

Field	Subfield or refinement	Entry	Explanation and action
	OPRONFL	from field CT4QNAME in table CT4QNAMS	Operator on failure. If FUNCTYPE = TOPSAUTO, datafill this refinement. This field indicates the CT4Q for QMS POSTAUTO refinement ordering if live operator backup is required for the existing TOPS automated system specified in field AUTOSYS. This value is defined in field CT4QNAME of table CT4QNAMS.
	OPRCT4Q	from field CT4QNAME in table CT4QNAMS	Operator call type for queue. If FUNCTYPE = TOPSOPER, datafill this refinement. This field indicates the CT4Q for the final call queue assignment when obtaining a live operator for this function. This value is defined in field CT4QNAME of table CT4QNAMS.

Datafill example for table OAFUNDEF

The following example shows sample datafill for table OAFUNDEF.

MAP display example for table OAFUNDEF

```
FUNCNUM  FUNCNAME        FUNCAREA
-------------------------------------------------------
1        BRANDING        SN  TASERV N Y CQ1
2        BRANDING_CSN1   SN  TASERV N N HOST1_SP
3        YELLOW_PAGES    SN  TASERV Y TRIG_3_PL Y CQ3
4        AABS_CSN2       SN  TASERV N N HOST2_SP
5        0_MINUS_OPER    TOPSOPER  0_MINUS
6        TOPS_AABS       TOPSAUTO  AABS  0_PLUS
```

Error messages for table OAFUNDEF

The following error messages apply to table OAFUNDEF.

Error messages for table OAFUNDEF

Error message	Explanation and action
`OSSAIN function names must be unique.`	This message is displayed if an attempt is made to add two tuples with the same function name.
`AABS is the only TOPS automated system that is currently supported for OSSAIN.`	This message is displayed if an attempt is made to datafill field AUTOSYS with a TOPS automated system other than AABS. AABS is the only TOPS automated system that is currently supported for OSSAIN.
`Only session pools with ORIGTYPE OSACORIG may be datafilled in field HRSESNPL.`	If the session pool for field HRSESNPL is not datafilled as an OSACORIG session pool in table OASESNP, this error message is displayed.
`Only nodes of PM type OSAC may be datafilled in field NODENAME.`	This message is displayed if an attempt is made to datafill a node name in table OAFUNDEF that is not of type OSAC. Table OANODINV allows nodes to be one of three types: OSN, OSNM, and OSAC. Only OSAC type nodes can be datafilled in table OAFUNDEF when CAMHERE = N.
`This CT4Q is in use in table OAFUNDEF.` `You must remove all references to this CT4Q before you can delete it.`	This message is displayed if an attempt is made to delete a CT4Q from table CT4QNAMS that is in use in table OAFUNDEF. Tuples may not be deleted from table CT4QNAMS until all references to that CT4Q are removed from table OAFUNDEF.
`Field <field name> must be datafilled with a CT4Q from table CT4QNAMS that has a SYSTEM value of TOPSOPR.`	This message is displayed if an attempt is made to datafill field OPRCT4Q or OPRONFL with a CT4Q that is not defined in table CT4QNAMS with field SYSTEM , MCCS, ACTS, BRANDING = TOPSOPR.
`This function is datafilled in table XXXXXXXX.` `Since field FUNCTYPE is being changed from SN, you must remove any references to this function from the OSSAIN trigger tables.`	This message is displayed if an attempt is made to change the FUNCTYPE field from SN to TOPSOPER or TOPSAUTO and the function is referenced in any OSSAIN trigger table. The trigger tables may only redirect to a node.

OSSAIN 07 Enhancements (continued)

Error messages for table OAFUNDEF

Error message	Explanation and action
`This function name is in use in table XXXXXXXX.` `You must remove all references to this function name before you can delete it.`	This message is displayed if an attempt is made to delete a tuple from table OAFUNDEF that has a function name used in one of the following tables: OAFNDISP, OAFUNBLK, OACNNPRF, OATLKPRF, OADTFPRF, OACAUPRF, OADSCPRF, or OACTLDEF. Tuples may not be deleted from table OAFUNDEF until all datafill references to that function name are deleted from all of the above tables. Table OAFUNDEF must be datafilled before the above tables. Standard table control error messages are displayed if an attempt is made to datafill those tables with a function name that has not been defined in table OAFUNDEF.
`Only session pools with TRIGEVNT=Y may be datafilled in field TRIGPOOL.`	If the trigger event inform pool is not datafilled as a trigger event session pool, this error message is displayed.
`TYPE OF HRSESNPL IS SR_SESSION_POOL_RANGE`	Tables OANODINV and OASESNPL must be datafilled before host-remote session pools can be used in table OAFUNDEF. A standard table control message is displayed if an attempt is made to datafill a session pool in field H_R_SNPL that is not datafilled in table OASESNPL.

Datafilling table OAINPRE

OSSAIN preprocessing is a new table in TOPS07 that defines the OSSAIN function for each CT4Q name utilized by TOPS calls receiving OSSAIN preprocessing. Each CT4Q datafilled in this table must first be assigned in table CT4QNAMS.

Calls assigned to a TOPS operator or automated system (AABS, ACTS or MCCS) are eligible to receive OSSAIN preprocessing from a service node. OSSAIN preprocessing allows for services such as SN branding of ACTS and MCCS calls. This processing occurs prior to connection to the operator or automated system. At completion of the session, the call resumes its predetermined course to the TOPS system.

Tables CT4QNAMS and OAFUNDEF must be datafilled before table OAINPRF.

The following is a description of the table:

Datafilling table OAINPRE

Field	Subfield or refinement	Entry	Explanation and action
CT4Q		name from CT4QNAMS	Call type for queueing. This value must be defined in table CT4QNAMS with field SYSAREA = Y and field OAINPRE = Y. This requirement selects OSSAIN preprocessing for this call.
NETWRKID		0 to 32766	Network service ID. Enter a unique identifier for a service throughout the network for billing purposes.
OAFUNCNM		from table OAFUNDEF	OSSAIN function name. Enter a function name from table OAFUNDEF to be applied to the call in field CT4Q.

Datafill example for table OAINPRE

The following example shows sample datafill for table OAINPRE.

MAP display example for table OAINPRE

```
CT4Q           NETWRKID    OAFUNCNM
-------------------------------------------------------
1_PLUS_COIN    200         SN_TOLL_BRAND
1_PLUS_HOTEL   201         HOTEL_OAINPRE
```

Error messages for table OAINPRF

The following error messages apply to table OAINPRF.

Error messages for table OAINPRF

Error message	Explanation and action
`CT4Q does not receive OSSAIN Preprocessing`	If an attempt is made to add or change a tuple to utilize a CT4Q not datafilled with the OAINPRE field set to Y in table CT4QNAMS, this warning message is displayed.

Datafilling table OAFUNBLK

OSSAIN Function Blocking was a new table in TOPS06 that defines the available set of functions for an originating directory number (DN). The DN is mapped in table TOPSDB to an index into table OAFUNBLK. Each entry in

OSSAIN 07 Enhancements (continued)

table OAFUNBLK specifies a list of functions to be included in the available set or excluded from the available set.

Tuple 0 is the default tuple that indicates there are no functions excluded for the current DN (that is, every function is allowed).

Table OAFUNDEF must be datafilled before table OAFUNBLK. Table OAFUNBLK must be datafilled before table TOPSDB.

The following is a description of the table:

Datafilling table OAFUNBLK

Field	Subfield or refinement	Entry	Explanation and action
IDX		0 to 1022	Index. An index from table TOPSDB.
FNBLKSEL		INCLUDE or EXCLUDE	Function block select. This field determines which functions are included or excluded. Excluded means that all functions in table OAFUNDEF are allowed for this index (associated DN) except for the ones datafilled in this list. Included means that only the functions in this list are allowed for this index (associated DN).
OAFUNCTS		A list of 0 to 5 functions from table OAFUNDEF.	OSSAIN functions. A list of sequentially performed functions. The function names are defined in field FUNCNAME of table OAFUNDEF.

Datafill example for table OAFUNBLK

The following example shows sample datafill for table OAFUNBLK.

MAP display example for table OAFUNBLK

```
IDX   FNBLKSEL   OAFUNCTS
-------------------------------------------------------
0     EXCLUDE     $
1     INCLUDE    BRANDING  NODE_AABS  YELLOW_PAGES$
2     INCLUDE    TOPS_BRANDING  TOPS_AABS$
3     EXCLUDE    YELLOW_PAGES$
```

In the above example, tuple 0 is the default tuple that indicates there are no functions excluded for the current DN (that is, every function is allowed).

Error messages for table OAFUNBLK

The following error messages apply to table OAFUNBLK.

Error messages for table OAFUNBLK

Error message	Explanation and action
TUPLE REFERRED TO BY ANOTHER TABLE - USE TABREF TO GET POTENTIAL TABLE LIST.	This message is displayed if an attempt is made to delete a tuple from table OAFUNBLK that has an index in table TOPSDB. Tuples may not be deleted from table OAFUNBLK if the index value is defined in table TOPSDB. Table OAFUNBLK must be datafilled before table TOPSDB.

Datafilling table TOPSDB

New field OAFUNBLK is added at the end of the tuple to index into table OAFUNBLK for blocking functions by directory number.

Table TOPSDB provides the indices into tables TDBCLASS, TDBDAOPT, TDBNORM, TDBSERV, and new table OAFUNBLK.

Table OAFUNBLK must be datafilled before table TOPSDB.

The following table shows the datafill specific to OSSAIN 07 Enhancements for table TOPDB. Only those fields that apply directly to OSSAIN 07 Enhancements are shown. For a description of the other fields, refer to the data schema section of this document.

Datafilling table TOPSDB

Field	Subfield or refinement	Entry	Explanation and action
TDBKEY		from table DNSCRN	TOPS data base key. This is an existing field that is an index into this table from table DNSCRN.
OAFUNBLK		0 to 1022	OSSAIN function block. This was a new field in TOPS06 that is an index into table OAFUNBLK. This field is used to block functions per DN.

Datafill example for table TOPSDB

The following example shows sample datafill for table TOPSDB.

OSSAIN 07 Enhancements (continued)

MAP display example for table TOPSDB

```
TDBKEY  TDBCLIDX  TDBDAOPT  TDBNORM  TDBSERV  OAFUNBLK
-------------------------------------------------------
0       0         0         0        0        0
1       1         0         0        0        0
2       2         0         0        0        2
3       4         0         0        0        1
```

In the above datafill example, tuple 0 is a default and cannot be changed or deleted.

Error messages for table TOPSDB

The following error messages apply to table TOPSDB.

Error messages for table TOPSDB

Error message	Explanation and action
`Tuple <idx> is not datafilled in table OAFUNBLK.`	This message is displayed if an attempt is made to datafill table TOPSDB with an index (field OAFUNBLK) that has not been defined in table OAFUNBLK (field IDX). Table OAFUNBLK must be datafilled before table TOPSDB.

Datafilling table DNSCRN

This table is not changed. Datafill directory numbers that require function blocking in table OAFUNBLK.

Datafill example for table DNSCRN

The following example shows sample datafill for table DNSCRN.

MAP display example for table DNSCRN

```
DN                ATTROPTS
-------------------------------------------------------
6193229801        (TOPSDB 1)
6193229900        (TOPSDB 2)
```

Datafilling table OACTLDEF

OSSAIN Control List Definition was a new table in TOPS06 that defines control lists for processing OSSAIN calls. A control list is a list of OSSAIN

functions (services) provided by service nodes, existing TOPS operators, and existing TOPS automated services.

Table OAFUNDEF must be datafilled before table OACTLDEF. Table OACTLDEF must be datafilled before tables OACNNPRF, OATLKPRF, OADSCPRF, OACAUPRF, OADTFPRF, OAFNDISP, and OAINCTLA.

Following is a description of the table:

Datafilling table OACTLDEF

Field	Subfield or refinement	Entry	Explanation and action
OACTLNUM		0 to 4094	OSSAIN control number. Index into table from tables OACNNPRF, OATLKPRF, OADSCPRF, OACAUPRF, OADTFPRF, OAFNDISP, and OAINCTLA.
OACTLNAM		1 to 16 characters	OSSAIN control list name. This name is used by tables OACNNPRF, OACAUPRF, OADTFPRF, OADSCPRF, OATLKPRF, OAFNDISP, and OAINCTLA.
NETWRKID		0 to 32767	Network service ID. A unique identifier for a service throughout the network for billing purposes.
OAFUNCTS		from table OAFUNDEF	OSSAIN functions. A list of function names from table OAFUNDEF. These functions (services) are performed sequentially. Currently, only one function can be entered.

Datafill example for table OACTLDEF

The following example shows sample datafill for table OACTLDEF.

MAP display example for table OACTLDEF

```
OACTLNUM  OACTLNAM     NETWRKID  OAFUNCTS
--------------------------------------------------------
0         0+AABS       3         NEW_AABS$
1         0+DA_SERV    7         OSSAIN_DA$
2         ROUTER       2         ROUTE_NODE$
```

OSSAIN 07 Enhancements (continued)

Error messages for table OACTLDEF

The following error messages apply to table OACTLDEF.

Error messages for table OACTLDEF

Error message	Explanation and action
`This control list name is in use in table XXXXXXXX.` `You must remove all references to this control list name before you can delete it.`	This message is displayed if an attempt is made to delete a tuple from table OACTLDEF that has a control list name used in one of the tables: OACNNPRF, OATLKPRF, OADSCPRF, OACAUPRF, OADTFPRF, OAFNDISP, and OAINCTLA. Tuples may not be deleted from table OACTLDEF until all datafill references to that control list name are deleted from tables OACNNPRF, OATLKPRF, OADSCPRF, OACAUPRF, OADTFPRF, OAFNDISP, and OAINCTLA.
`A control list must have at least 1 function datafilled.`	One function must be datafilled. This message is displayed if an attempt is made to datafill field OAFUNCTS with zero or more than one function.

Datafilling table OAFNDISP

OSSAIN Function Disposition defines the actions when an OSSAIN call is deflected or overflowed by the queue management system (QMS) call and agent manager (CAM), a function is blocked, or a failure is encountered when attempting to send an OAP Session Begin message to a service node once an agent has been selected for the call. The OSSAIN call can be routed to treatment, transferred to another function, or transferred to a control list when a disposition is required.

In TOPS07, fields ORFLDISP and DEFLACTN are used for additional types of errors.

Tables OAFUNDEF and OACTLDEF must be datafilled before table OAFNDISP.

Following is a description of the table:

Datafilling table OAFNDISP

Field	Subfield or refinement	Entry	Explanation and action
FUNCNAME		name from table OAFUNDEF	Function name. Enter a function name defined in table OAFUNDEF.
DEFLACTN		see subfield DEFLDISP	Call deflection action. This field consists of subfield DEFLDISP. Note, this field does not apply to functions with field FUNCTYPE = TOPSOPR or TOPSAUTO in table OAFUNDEF.
	DEFLDISP	TREAT, GOTOFN, or GOTOCTL	Call deflection disposition. This action is taken for the following reasons: • An OSSAIN call is deflected from an OSSAIN queue. Queue deflection occurs if deflection is enabled for the queue and the predicted wait time before the call is connected to an agent exceeds the limit set in table QMSCQDEF for that call queue. This deflection criteria is determined by the QMS CAM the same way as for TOPS operator calls. • Communication is down between the host and remote, preventing the remote from requesting a session from the host. Following are the actions: • TREAT - Route to treatment. Datafill refinement TREATMENT. • GOTOCTL - Route to another control list. Datafill refinement CTLLIST. • GOTOFN - Route to another function. Datafill refinement FUNCTION.
	TREATMENT	name from table TMTCNTL	Treatment. If field DEFLDISP=TREAT, datafill this refinement with a name defined in table TMTCNTL.
	CTLLIST	name from table OACTLDEF	Control list. If field DEFLDISP = CTLLIST, datafill this refinement with a control list name defined in table OACTLDEF.

OSSAIN 07 Enhancements (continued)

Datafilling table OAFNDISP

Field	Subfield or refinement	Entry	Explanation and action
	FUNCTION	name from table OAFUNDEF	Function. If field DEFLDISP = FUNCTION, datafill this refinement with a function name defined in table OAFUNDEF.
OVRFACTN		see subfield OVFLDISP	Call overflow action. This field consists of subfield OVFLDISP. Note, this field does not apply to functions with FUNCTYPE = TOPSOPR or TOPSAUTO in table OAFUNDEF.
	OVFLDISP	TREAT, GOTOFN, or GOTOCTL	Call overflow disposition. This action is taken for the following reasons: • The QMS CAM indicates that the OSSAIN queue for this call is in an overflow state. Queue overflow occurs when no agents are available for an OSSAIN call queue and the call queue would exceed its maximum size in table QMSCQDEF if this call were queued. This overflow criteria is determined by the QMS CAM the same way as for TOPS operator calls. • A host-remote session is not available at the remote to request a SN session for an active service node.
	TREATMENT	name from table TMTCNTL.	Treatment. If field DEFLDISP = TREAT, datafill this refinement with a name defined in table TMTCNTL.
	CTLLIST	name from table OACTLDEF	Control list. If field OVFLDISP = CTLLIST, datafill this refinement with a control list name defined in table OACTLDEF.
	FUNCTION	name from table OAFUNDEF	Function. If field OVFLDISP = FUNCTION, datafill this refinement with a function name defined in table OAFUNDEF.
BLCKACTN		see subfield BLCKDISP	Blocked function action. This field consists of subfield BLCKDISP.
	BLCKDISP	TREAT, GOTOFN, or GOTOCTL	Blocked function disposition. This action is taken if an OSSAIN call is blocked from the requested function.

Datafilling table OAFNDISP

Field	Subfield or refinement	Entry	Explanation and action
	TREATMENT	name from table TMTCNTL.	Treatment. If field BLCKDISP = TREAT, datafill this refinement with a name defined in table TMTCNTL.
	CTLLIST	name from table OACTLDEF	Control list. If field BLCKDISP = CTLLIST, datafill this refinement with a control list name defined in table OACTLDEF.
	FUNCTION	name from table OAFUNDEF	Function. If field BLCKDISP = FUNCTION, datafill this refinement with a function name defined in table OAFUNDEF.
ORFLACTN		see subfield ORFLDISP	Origination failure action. This field consists of subfield ORFLDISP. Note, this field does not apply to functions with FUNCTYPE = TOPSOPR or TOPSAUTO in table OAFUNDEF.
..	ORFLDISP	TREAT, GOTOFN, or GOTOCTL	OAP routing failure disposition. This action is taken for the following reasons: • A failure when sending the OAP Session Begin message to the service node after the session for the call has already been selected. • The OSAC host returns a service node session to the remote for a subscriber originated call but the session cannot be used by the remote. The remote may not use the session due to any of the following reasons: — invalid service node state — invalid session pool state — invalid session id — OAP protocol version not negotiable • A returned service node session pool id or session id returned from the host to the remote is not valid. That is, the origination type is not valid. • If the remote times out waiting for a response to a session request for an active service node.

OSSAIN 07 Enhancements (continued)

Datafilling table OAFNDISP

Field	Subfield or refinement	Entry	Explanation and action
	TREATMENT	name from table TMTCNTL	Treatment. If field ORFLDISP = TREAT, datafill this refinement with a name defined in table TMTCNTL.
	CTLLIST	name from table OACTLDEF	Control list. If field ORFLDISP = CTLLIST, datafill this refinement with a control list name defined in table OACTLDEF.
	FUNCTION	name from table OAFUNDEF	Function. If field ORFLDISP = FUNCTION, datafill this refinement with a function name defined in table OAFUNDEF.

Datafill example for table OAFNDISP

The following example shows sample datafill for table OAFNDISP.

MAP display example for table OAFNDISP

```
FUNCNAME   DEFLACTN             OVRFACTN
               BLCKACTN             ORFLACTN
-------------------------------------------------------
BRANDING   GOTOCTL CTLLIST2     GOTOFN LIVE_OPER
              GOTOFN OLDBRANDING    GOTOFN OLDBRANDING
YELPAGES   TREAT VACT           GOTOFN YELPGS_OPER
               GOTOCTL CTLLIST3     TREAT VACT
```

Datafilling table OADTFPRF

OSSAIN DTMF Profile was a new table in TOPS06 that selects services according to DTMF digits while a call is being connected or disconnected. These periods only occur during call float. Only services provided by an OSSAIN node can be selected; that is, a TOPS operator or TOPS automated system cannot be selected.

Tables OAFUNDEF and OACTLDEF must be datafilled prior to datafilling this table.

This table must be datafilled prior to datafilling a dtmf index into tables OACNNPRF and OADSCPRF.

Following is a description of the table:

Datafilling table OADTFPRF

Field	Subfield or refinement	Entry	Explanation and action
DTMFIDX		0 to 2046	DTMF index. Index into table from either table OADSCPRF or OACNNPRF.
PROFILE		see subfields	Profile. This field consists of subfields DIGIT, GENAMA, RLSFWD, and ACTSEL.
	DIGIT	a numeric DTMF digit (0 to 9), STAR, OCTO	DTMF digit. If this event occurs and is selected, the call is routed to an OSSAIN node based on the received DTMF digit. Otherwise, if this event occurs but is not selected, the DTMF input is ignored. Calls floated by AABS or MCCS use DTMF digit # to initiate a sequence call. Value OCTO in this field overrides this processing and routes the call to an OSSAIN node. Calls floated by AABS or MCCS use DTMF digit * to initiate pre-OSSAIN message delivery service (MDS). Value STAR in this field overrides this processing and routes the call to an OSSAIN node.
	GENAMA	Y or N	Generate AMA record. Enter Y to generate an AMA record when processing a DTMF digit event. Otherwise, enter N.
	RLSFWD	Y or N	Release forward party. Enter Y to release the forward party when processing a DTMF digit event. Otherwise, enter N.
	ACTSEL	see subfield ACCTYPE	Action select. This field consists of subfield ACTTYPE.
	ACTTYPE	CTRLLIST or FUNCTION	Action type. Select either a list of services (CTRLLIST) or a single service (FUNCTION) to be performed if the selected trigger occurs. If ACTTYPE = CTRLLIST, datafill subfield CTRLLIST. If ACTTYPE = FUNCTION, datafill subfield FUNCTION.

OSSAIN 07 Enhancements (continued)

Datafilling table OADTFPRF

Field	Subfield or refinement	Entry	Explanation and action
	CTRLLIST	name from table OACTLDEF	Control list. If ACTTYPE = CTRLLIST, datafill this refinement. Enter a control list name from table OACTLDEF. A control list is a list of services (defined in table OAFUNDEF) that are applied sequentially. The service provider must be a service node (field FUNCTYPE = SN in table OAFUNDEF). That is, at call float, a trigger event can only redirect a call to a service node.
	FUNCTION	name from table OAFUNDEF	Function. If ACTTYPE = FUNCTION, datafill this refinement. Enter a function name from table OAFUNDEF. A function is a service. The service provider must be a service node (field FUNCTYPE = SN in table OAFUNDEF). That is, at call float, a trigger event can only redirect a call to a service node.
HOLDRCVR		Y or N	Hold receiver. Enter Y to retain the DTMF receiver when transitioning to a service node. Otherwise, enter N.

Datafill example for table OADTFPRF

The following example shows sample datafill for table OADTFPRF.

MAP display example for table OADTFPRF

```
DTMFIDX  PROFILE
                                                    HOLDRCVR
-------------------------------------------------------------
0       (0 N N FUNCTION TOLL_OPR)
        (STAR N N FUNCTION MDS_NODE)$
                                                    N
```

Error messages for table OADTFPRF

The following error messages apply to table OADTFPRF.

Error messages for table OADTFPRF

Error message	Explanation and action
RLSFWD MUST BE SET TO Y WHEN GENAMA IS SET TO Y.	When setting the GENAMA field to Y, the RLSFWD field must also be set to Y. If an attempt is made to set GENAMA to Y while setting RLSFWD to N, this error message is displayed.

Datafilling table OACAUPRF

OSSAIN Cause Profile was a new table in TOPS06 that selects services according to ISUP cause codes while a call is being connected. This period only occurs during call float. Only services provided by an OSSAIN node can be selected; that is, a TOPS operator or TOPS automated system cannot be selected.

Tables OAFUNDEF and OACTLDEF must be datafilled prior to datafilling this table.

This table must be datafilled prior to datafilling a cause index into table OACNNPRF.

Following is a description of the table:

Datafilling table OACAUPRF

Field	Subfield or refinement	Entry	Explanation and action
IDX		0 to 2046	Index. Index into table from table OACNNPRF.
PROFILE		see subfield RELCLASS	Profile. This field consists of subfield RELCLASS.

OSSAIN 07 Enhancements (continued)

Datafilling table OACAUPRF

Field	Subfield or refinement	Entry	Explanation and action
	RELCLASS	NORM, CL2, CL3, CL4, CL5, CL6, CL7	ISUP release class. • NORM - Normal Event Class - Cause codes 1-31 • CL2 - Resource Unavailable Class - Cause codes 34-47 • CL3 - Service Option Not Available Class - Cause codes 52-63 • CL4 - Service Option Not Implemented Class - Cause codes 65-79 • CL5 - Invalid Message Class - Cause codes 81-95 • CL6 - Protocol Error Class - Cause codes 97-111 • CL7 - Interworking Class - Cause code 127 If RELCLASS = NORM, datafill refinements RELCAUSE and ACTSEL. If RELCLASS = CL2 through CL7, datafill refinement ACTSEL.

Datafilling table OACAUPRF

Field	Subfield or refinement	Entry	Explanation and action
	RELCAUSE	1 to 31	ISUP release cause code. If RELCLASS = NORM, datafill this refinement. For calls not terminating to ISUP trunks, the cause code is not applicable. If a cause code occurs but is not selected for triggering, the call is routed to an appropriate treatment for that cause code. Or, if the cause code occurs and is selected for triggering, the call is instead routed to an OSSAIN node. Following are the codes: • 1 - Unallocated Number • 2 - No Route to Transit Network • 3 - No Route to Destination • 4 - Send Special Info Tone • 5 - Misdialled Trunk Prefix • 16 - Normal Clearing • 17 - User Busy • 18 - No User Responding • 19 - No Answer From User • 21 - Call Rejected • 22 - Number Changed • 25 - Translations Fail • 26 - Call Returns • 27 - Destination out of Service • 28 - Address Incomplete • 29 - Facility Rejected • 30 - Apply Locally • 31 - Normal Unspecified ***Note:*** This list contains the current known ISUP release cause codes. However, any release cause in the range 1-31 can be datafilled.
	ACTSEL	see subfield ACCTYPE	Action select. This refinement is datafilled for all values of field RELCLASS. This field consists of subfield ACTTYPE.

OSSAIN 07 Enhancements (continued)

Datafilling table OACAUPRF

Field	Subfield or refinement	Entry	Explanation and action
	ACTTYPE	CTRLLIST or FUNCTION	Action type. Select either a list of services (CTRLLIST) or a single service (FUNCTION) to be performed if the the selected trigger occurs. If ACTTYPE = CTRLLIST, datafill subfield CTRLLIST. If ACTTYPE = FUNCTION, datafill subfield FUNCTION.
	CTRLLIST	name from table OACTLDEF	Control list. If ACTTYPE = CTRLLIST, datafill this refinement. Enter a control list name from table OACTLDEF. A control list is a list of services (defined in table OAFUNDEF) that are applied sequentially. The service provider must be a service node (field FUNCTYPE = SN in table OAFUNDEF). That is, at call float, a trigger event can only redirect a call to a service node.
	FUNCTION	name from table OAFUNDEF	Function. If ACTTYPE = FUNCTION, datafill this refinement. Enter a function name from table OAFUNDEF. A function is a service. The service provider must be a service node (field FUNCTYPE = SN in table OAFUNDEF). That is, at call float, a trigger event can only redirect a call to a service node

Datafill example for table OACAUPRF

The following example shows sample datafill for table OACAUPRF.

MAP display example for table OACAUPRF

```
IDX   PROFILE
-----------------------------------------------------------
0     (NORM 17 FUNCTION MDS_NODE)
      (NORM 18 FUNCTION MDS_NODE)
      (NORM 19 FUNCTION MDS_NODE)
      (CL2 FUNCTION MDS_NODE)$
```

Datafilling table OADSCPRF

OSSAIN Post Disconnect Profile was a new table in TOPS06 that selects services according to types of events during post call disconnect. Trigger events only occur during call float. Only services provided by an OSSAIN

node can be selected; that is, a TOPS operator or TOPS automated system cannot be selected.

Tables OAFUNDEF, OACTLDEF, and OADTFPRF must be datafilled before this table.

Following is a description of the table:

Datafilling table OADSCPRF

Field	Subfield or refinement	Entry	Explanation and action
DISCIDX		0 to 2046	Post disconnect index. Index into table from table OATPRFIX
PROFILE		see subfields	Profile. This field consists of subfields TRIGGER, SNCONTROL and ACTSEL.
	TRIGGER	FLASH, CLGD	Trigger. A list of trigger events during post call disconnect (end with `$'). If no events are entered, no further refinements of PROFILE must be datafilled. Note, the MAP display also shows values RING, NTFY, TRMT, OPLSF, NOANS, ANS, and PTYD; however, these are not valid trigger events. Following are the valid events: FLASH - The calling party hook flashes. If this event occurs and is selected, the call is routed to an OSSAIN node. Otherwise, if this event occurs but is not selected, this event is ignored. Note, OSSAIN trigger processing is not supported for ACTS floated calls. Calls floated by ACTS are routed to an operator. CLGD - Calling disconnect. The calling party goes on-hook. If this event occurs and is selected, the call is routed to an OSSAIN node. Otherwise, if this event occurs but is not selected, the call is taken down. Note, OSSAIN trigger processing is not supported for calls requiring Time and Charges. These calls are routed to ACTS or an operator.

OSSAIN 07 Enhancements (continued)

Datafilling table OADSCPRF

Field	Subfield or refinement	Entry	Explanation and action
	SNCONTRL	Y or N	Service node control. Indicates whether or not the service node acquires control of the call for this trigger event. A Y indicates that the service node acquires control. An N indicates that the service node is informed of the trigger event but call control remains at the TOPS switch. When set to N, the service node is given a minimum of information, mainly the session begin message. When set to Y, all event information is sent to the service node for it to determine processing. And, trigger processing is not performed, rather the node is informed of the events so that the node can determine the course of action. Therefore, this table (OADSCPRF) is only valid if SNCONTRL = N.
	ACTSEL	see subfield ACCTYPE	Action select. This field consists of subfield ACTTYPE.
	ACTTYPE	CTRLLIST or FUNCTION	Action type. Select either a list of services (CTRLLIST) or a single service (FUNCTION) to be performed if the the selected trigger occurs. If ACTTYPE = CTRLLIST, datafill subfield CTRLLIST. If ACTTYPE = FUNCTION, datafill subfield FUNCTION.
	CTRLLIST	name from table OACTLDEF	Control list. If ACTTYPE = CTRLLIST, datafill this refinement. Enter a control list name from table OACTLDEF. A control list is a list of services (defined in table OAFUNDEF) that are applied sequentially. The service provider must be a service node (field FUNCTYPE = SN in table OAFUNDEF). That is, at call float, a trigger event can only redirect a call to a service node.
	FUNCTION	name from table OAFUNDEF	Function. If ACTTYPE = FUNCTION, datafill this refinement. Enter a function name from table OAFUNDEF. A function is a service. The service provider must be a service node (field FUNCTYPE = SN in table OAFUNDEF). That is, at call float, a trigger event can only redirect a call to a service node

Datafilling table OADSCPRF

Field	Subfield or refinement	Entry	Explanation and action
DTMFPRF		see subfield DTMFSEL	DTMF profile. This field consists of subfield DTMFSEL.
	DTMFSEL	Y or N	DTMF select. Enter Y for DTMF trigger processing of the call and datafill subfield DTMFIDX. Otherwise, enter N and no further refinements require datafilled.
	DTMFIDX	0 to 2046	DTMF index. Datafill this field if DTMFSEL = Y. Enter an index into table OADTFPRF.

Datafill example for table OADSCPRF

The following example shows sample datafill for table OADSCPRF.

MAP display example for table OADSCPRF

```
DISCIDX  PROFILE                                    DTMFPRF
-------------------------------------------------------------
0        (PTYD Y FUNCTION ROUTE_NODE) $      Y 7
1         $                                  Y 4
```

Error messages for table OADSCPRF

The following error messages apply to table OADSCPRF.

Error messages for table OADSCPRF

Error message	Explanation and action
`NOT A VALID DISCONNECT TRIGGER`	Table OACNNPRF can only be datafilled with the following triggers: FLASH and CLGD. If an attempt is made to add or change the TRIGGER field to a value not in the above list, this error message is displayed.
`Only one action assignment allowed per trigger`	An attempt was made to add or change a tuple with more than one action assigned to the same trigger.
`DTMF index is not in table OADTFPRF`	An attempt was made to add or change a tuple to utilize a DTMF profile index not yet datafilled in table OADTFRPF.

OSSAIN 07 Enhancements (continued)

Datafilling table OATLKPRF

OSSAIN Talking Profile was a new table in TOPS06 that selects services according to types of events during the talking part of the call. Trigger events only occur during call float. Only services provided by an OSSAIN node can be selected; that is, a TOPS operator or TOPS automated system cannot be selected.

In TOPS07, prepaid calling card is supported by new fields STOPCNVT, GENAMA, and RLSFWD. Also, refinement STOPCNVT is added to fields STAR and OCTO.

Tables OAFUNDEF and OACTLDEF must be datafilled before this table.

Following is a description of the table:

Datafilling table OATLKPRF

Field	Subfield or refinement	Entry	Explanation and action
TALKIDX		0 to 2046	Talking index. Index into table from table OATPRFIX
PROFILE		see subfields	Profile. This field consists of subfields TRIGGER, SNCONTROL, STOPCNVT, GENAMA, RLSFWD, and ACTSEL.
	TRIGGER	NTFY, FLASH, CLGD, PTYD	Trigger. Enter a list of trigger events during the talking part of the call (end with `$'). If no events are entered, no further refinements of PROFILE must be datafilled. Note, the MAP display also shows values TRMT, RING, OPLSF, NOANS, and ANS; however, these are not valid trigger events. Following are the valid events:

Datafilling table OATLKPRF

Field	Subfield or refinement	Entry	Explanation and action
			NTFY - Notify. The notification event occurs when the notification timer expires prior to disconnect. The notification timer is only started if the notification event is datafilled in table OATLKPRF. Then, the notification timer is started when answer is detected. Notification timers started by ACTS for coin notification take precedence over those specified by table OATLKPRF. The notification time is initially specified by the NOTIFY_TIMER in table OAINPARM. If the NTFY event occurs and is selected, the call is routed to an OSSAIN node. Otherwise, if this event occurs but is not selected, notification for a coin call is routed to ACTS. Note, trigger processing is not supported for calls floated by ACTS. FLASH - The calling party hook flashes. If this event occurs and is selected, the call is routed to an OSSAIN node. Otherwise, if this event occurs but is not selected, this event is ignored. Note, OSSAIN trigger processing is not supported for ACTS floated calls. Calls floated by ACTS are routed to an operator. CLGD - Calling disconnect. The calling party goes on-hook. If this event occurs and is selected, the call is routed to an OSSAIN node. Otherwise, if this event occurs but is not selected, trigger processing transitions to post disconnect processing. Note, OSSAIN trigger processing is not supported for calls requiring Time and Charges. These calls are routed to ACTS or an operator. PTYD - Party disconnect. Any party, other than the calling party, that goes on-hook. If this event occurs and is selected, the call is routed to an OSSAIN node. Otherwise, if this event occurs but is not selected, trigger processing transitions to post disconnect processing. Note, OSSAIN trigger processing is not supported for calls requiring Time and Charges. These calls are routed to ACTS or an operator.

OSSAIN 07 Enhancements (continued)

Datafilling table OATLKPRF

Field	Subfield or refinement	Entry	Explanation and action
	SNCONTRL	Y or N	Service node control. Indicates whether or not the service node acquires control of the call for this trigger event. A Y indicates that the service node acquires control. An N indicates that the service node is informed of the trigger event but call control remains at the TOPS switch. When set to N, the service node is given a minimum of information, mainly the session begin message. When set to Y, all event information is sent to the service node for it to determine processing. And, trigger processing is not performed, rather the node is informed of the events so that the node can determine the course of action. Therefore, this table (OATLKPRF) is only valid if SNCONTRL = N.
	STOPCNVT	Y or N	Stop conversation timing when processing the trigger event. Enter Y to stop timing. Otherwise, enter N. The default is N. Conversation timing is used for prepaid calling card service and controlled by OFCENG parameter MINIMUM_CHARGE_DURATION. For further information, refer to section “Prepaid calling card".
	GENAMA	Y or N	Generate an AMA record when processing the trigger event. Enter Y to generate the record. Otherwise, enter N. The default is N.
	RLSFWD	Y or N	Release the forward party when processing the trigger event. Enter Y to release the party. Otherwise, enter N. The default is N.
	ACTSEL	see subfield ACCTYPE	Action select. This field consists of subfield ACTTYPE.
	ACTTYPE	CTRLLIST or FUNCTION	Action type. Select either a list of services (CTRLLIST) or a single service (FUNCTION) to be performed if the the selected trigger occurs. If ACTTYPE = CTRLLIST, datafill subfield CTRLLIST. If ACTTYPE = FUNCTION, datafill subfield FUNCTION.

Datafilling table OATLKPRF

Field	Subfield or refinement	Entry	Explanation and action
	CTRLLIST	name from table OACTLDEF	Control list. If ACTTYPE = CTRLLIST, datafill this refinement. Enter a control list name from table OACTLDEF. A control list is a list of services (defined in table OAFUNDEF) that are applied sequentially. The service provider must be a service node (field FUNCTYPE = SN in table OAFUNDEF). That is, at call float, a trigger event can only redirect a call to a service node.
	FUNCTION	name from table OAFUNDEF	Function. If ACTTYPE = FUNCTION, datafill this refinement. Enter a function name from table OAFUNDEF. A function is a service. The service provider must be a service node (field FUNCTYPE = SN in table OAFUNDEF). That is, at call float, a trigger event can only redirect a call to a service node
STAR		see subfield DIGITSEL	Star key. Service selection associated with DTMF * digit. This field consists of subfield DIGITSEL.
	DIGITSEL	Y or N	Digit select. Enter Y to enable trigger by DTMF * digit. Otherwise, enter N. If set to Y, datafill subfields STOPCNVT, GENAMA, RLSFWD, and ACTSEL.
	STOPCNVT	Y or N	Stop conversation timing. If DIGITSEL = Y, datafill this refinement. Enter Y to stop conversation timing when processing this trigger event. Otherwise, enter N.
	GENAMA	Y or N	Generate AMA. If DIGITSEL = Y, datafill this refinement. Enter Y to generate AMA when processing a DTMF * digit event. Otherwise, enter N.
	RLSFWD	Y or N	Release forward party. If DIGITSEL = Y, datafill this refinement. Enter Y to release the forward party when processing a DTMF* digit event. Otherwise, enter N.
	ACTSEL	see subfield ACCTYPE	Action select. If DIGITSEL = Y, datafill this refinement. This field consists of subfield ACTTYPE.

OSSAIN 07 Enhancements (continued)

Datafilling table OATLKPRF

Field	Subfield or refinement	Entry	Explanation and action
	ACTTYPE	FUNCTION or CTRLLIST	Action type. Select either a single service (FUNCTION) or list of services (CTRLLIST) to be performed if the the selected trigger occurs. If ACTTYPE = CTRLLIST, datafill subfield CTRLLIST. If ACTTYPE = FUNCTION, datafill subfield FUNCTION.
	CTRLLIST	name from table OACTLDEF	Control list. If ACTTYPE = CTRLLIST, datafill this refinement. Enter a control list name from table OACTLDEF. A control list is a list of services (defined in table OAFUNDEF) that are applied sequentially. The service provider must be a service node (field FUNCTYPE = SN in table OAFUNDEF). That is, at call float, a trigger event can only redirect a call to a service node.
	FUNCTION	name from table OAFUNDEF	Function. If ACTTYPE = FUNCTION, datafill this refinement. Enter a function name from table OAFUNDEF. A function is a service. The service provider must be a service node (field FUNCTYPE = SN in table OAFUNDEF). That is, at call float, a trigger event can only redirect a call to a service node
OCTO		see subfield DIGITSEL	Octothorpe key. Service selection associated with DTMF # digit. This field consists of subfield DIGITSEL.
	DIGITSEL	Y or N	Digit select. Enter Y to enable trigger by DTMF # digit. Otherwise, enter N. If set to Y, datafill subfields STOPCNVT, GENAMA, RLSFWD, and ACTSEL.
	STOPCNVT	Y or N	Stop conversation timing. If DIGITSEL = Y, datafill this refinement. Enter Y to stop conversation timing when processing this trigger event. Otherwise, enter N.
	GENAMA	Y or N	Generate AMA. If DIGITSEL = Y, datafill this refinement. Enter Y to generate AMA when processing a DTMF # digit event. Otherwise, enter N.

Datafilling table OATLKPRF

Field	Subfield or refinement	Entry	Explanation and action
	RLSFWD	Y or N	Release forward party. If DIGITSEL = Y, datafill this refinement. Enter Y to release the forward party when processing a DTMF# digit event. Otherwise, enter N.
	ACTSEL	see subfield ACCTYPE	Action select. If DIGITSEL = Y, datafill this refinement. This field consists of subfield ACTTYPE.
	ACTTYPE	FUNCTION or CTRLLIST	Action type. Select either a single service (FUNCTION) or list of services (CTRLLIST) to be performed if the the selected trigger occurs. If ACTTYPE = CTRLLIST, datafill subfield CTRLLIST. If ACTTYPE = FUNCTION, datafill subfield FUNCTION.
	CTRLLIST	name from table OACTLDEF	Control list. If ACTTYPE = CTRLLIST, datafill this refinement. Enter a control list name from table OACTLDEF. A control list is a list of services (defined in table OAFUNDEF) that are applied sequentially. The service provider must be a service node (field FUNCTYPE = SN in table OAFUNDEF). That is, at call float, a trigger event can only redirect a call to a service node.
	FUNCTION	name from table OAFUNDEF	Function. Control list. If ACTTYPE = FUNCTION, datafill this refinement. Enter a function name from table OAFUNDEF. A function is a service. The service provider must be a service node (field FUNCTYPE = SN in table OAFUNDEF). That is, at call float, a trigger event can only redirect a call to a service node
HOLDRCVR		Y or N	Hold receiver. Enter Y to retain the DTMF receiver when transitioning to a service node. Otherwise, enter N.

Datafill example for table OATLKPRF

The following example shows sample datafill for table OATLKPRF.

OSSAIN 07 Enhancements (continued)

MAP display example for table OATLKPRF

```
TALKIDX
                                                                PROFILE
          STAR                                          OCTO  HOLDRCVR
-----------------------------------------------------------------------
      0
(FLASH N N N Y FUNCTION TOLL_OPER)(NTFY Y N N N FUNCTION NEW_ACTS)$
           N                                             N     N
     1
(PTYD N N N Y CTRLLIST ROUTE_NODE)(Y N Y N CTRLLIST RTE_NODE)$
          (Y N Y N CTRLLIST RTE_NODE                     N     Y
```

Error messages for table OATLKPRF

The following error messages apply to table OATLKPRF.

Error messages for table OATLKPRF

Error message	Explanation and action
`ONLY ONE DIGIT STAR OR OCTO CAN BE DATAFILLED`	Only one DTMF digit event, STAR or OCTO, can be datafilled within the same tuple. If an attempt is made to datafill both STAR and OCTO trigger events, this error message is displayed.
`RLSFWD MUST BE SET TO Y WHEN GENAMA IS SET TO Y`	When setting the GENAMA field to Y, the RLSFWD field must also be set to Y. If an attempt is made to set GENAMA to Y while setting RLSFWD to N, this error message is displayed.
`NOT A VALID TALKING TRIGGER`	This message is displayed if an attempt is made to datafill an invalid value in field TRIGGER. Valid values are FLASH, CLGD, PTYD and NTFY.
`Only one action assignment allowed per trigger`	This message is displayed if an attempt is made to add or change a tuple with more than one action assigned to the same trigger.

Datafilling table OACNNPRF

OSSAIN Connecting Profile was a new table in TOPS06 that selects services according to types of trigger events while a call is being connected. Trigger events only occur during call float. Only services provided by an OSSAIN node can be selected; that is, a TOPS operator or TOPS automated system cannot be selected.

Tables OAFUNDEF, OACTLDEF, OADTFPRF, and OACAUPRF must be datafilled before this table.

Following is a description of the table:

Datafilling table OACNNPRF

Field	Subfield or refinement	Entry	Explanation and action
CONNIDX		0 to 2046	Connect index. Index into table from table OATPRFIX.
PROFILE		see subfields	Profile. This field consists of subfields TRIGGER, SNCONTROL and ACTSEL.
	TRIGGER	OPLSF, NOANS, FLASH, CLGD, ANS, TRMT, RING	Trigger. A list of trigger events during call connection (end with `$'). If no events are entered, no further refinements of PROFILE must be datafilled. Note, the MAP display also shows values NTFY, and PTYD; however, these are not valid trigger events. Following are the valid events: OPLSF - Outpulsing failure. Outpulsing may fail due to glare or an inoperable trunk in the terminating office. To account for these conditions the DMS switch automatically makes another attempt at routing the call to the terminating party. This event occurs after the second attempt fails. If this event occurs and is selected, the call is routed to an OSSAIN node. Otherwise, if this event occurs but is not selected, the call is taken down.

OSSAIN 07 Enhancements (continued)

Datafilling table OACNNPRF

Field	Subfield or refinement	Entry	Explanation and action
			NOANS - No answer. The call is not answered. No answer occurs when the no answer timer expires before answer. The no answer timer is only started if the no answer event is datafilled in table OACNNPRF. Then, the no answer timer is started upon successful outpulsing of all digits on an MF or DP trunk. And, the no answer timer is started upon receiving an Address Complete Message (ACM) on an ISUP trunk. The no answer time is initially specified by the NOANS_TIMER in table OAINPARM. If this event occurs and is selected, the call is routed to an OSSAIN node. Otherwise, if this event occurs but is not selected, the no answer timer is not started and eventually the calling party goes on-hook. FLASH - The calling party hook flashes. If this event occurs and is selected, the call is routed to an OSSAIN node. Otherwise, if this event occurs but is not selected, this event is ignored. Note, OSSAIN trigger processing is not supported for automatic coin toll service (ACTS) floated calls. Calls floated by ACTS are routed to an operator. CLGD - Calling disconnect. The calling party goes on-hook. If this event occurs and is selected, the call is routed to an OSSAIN node. Otherwise, if this event occurs but is not selected, the call is taken down. Then, the call may be routed to ACTS or an operator for time and charges. Note, OSSAIN trigger processing is not supported for calls requiring time and charges. These calls are routed to ACTS or an operator.

Datafilling table OACNNPRF

Field	Subfield or refinement	Entry	Explanation and action
			ANS - Answer. The terminating party answers. If this event occurs and is selected, the call begins, a connection timestamp is taken, and routed to an OSSAIN node. Otherwise, if this event occurs but is not selected, the call begins and a connection timestamp is taken. TRMT - Treatment. The call receives a local DMS switch treatment for conditions such as all trunks busy or vacant code. If this event occurs and is selected, the call is routed to an OSSAIN node. Calls floated to treatment cannot trigger to treatment. RING - Ringing. The call has terminated to an ISUP trunk. The terminating office indicates ringing by sending an ACM message, with the Called Party Status field set to `Subscriber Free' or `Connect When Free', back to the TOPS office. If this event occurs and is selected, the call is routed to an OSSAIN node. Otherwise, if this event occurs but is not selected, ringing is supplied to the originator by the terminating office.
	SNCONTRL	Y or N	Service node control. Indicates whether or not the service node acquires control of the call for this trigger event. A Y indicates that the service node acquires control. An N indicates that the service node is informed of the trigger event but call control remains at the TOPS switch. When set to N, the service node is given a minimum of information, mainly the session begin message. When set to Y, all event information is sent to the service node for it to determine processing. And, trigger processing is not performed, rather the node is informed of the events so that the node can determine the course of action. Therefore, this table (OACNNPRF) is only valid if SNCONTRL = N.
	ACTSEL	see subfield ACCTYPE	Action select. This field consists of subfield ACTTYPE.

OSSAIN 07 Enhancements (continued)

Datafilling table OACNNPRF

Field	Subfield or refinement	Entry	Explanation and action
	ACTTYPE	FUNCTION or CTRLLIST	Action type. Select either a single service (FUNCTION) or list of services (CTRLLIST) to be performed if the the selected trigger occurs. If ACTTYPE = CTRLLIST, datafill subfield CTRLLIST. If ACTTYPE = FUNCTION, datafill subfield FUNCTION.
	CTRLLIST	name from table OACTLDEF	Control list. If ACTTYPE = CTRLLIST, datafill this refinement. Enter a control list name from table OACTLDEF. A control list is a list of services (defined in table OAFUNDEF) that are applied sequentially. The service provider must be a service node (field FUNCTYPE = SN in table OAFUNDEF). That is, at call float, a trigger event can only redirect a call to a service node.
	FUNCTION	name from table OAFUNDEF	Function. If ACTTYPE = FUNCTION, datafill this refinement. Enter a function name from table OAFUNDEF. A function is a service. The service provider must be a service node (field FUNCTYPE = SN in table OAFUNDEF). That is, at call float, a trigger event can only redirect a call to a service node.
DTMFPRF		see subfield DTMFSEL	DTMF select. This field consists of subfield DTMFSEL.
	DTMFSEL	Y or N	DTMF profile. Enter Y for DTMF trigger processing of the call and datafill subfield DTMFIDX. Otherwise, enter N.
	DTMFIDX	0 to 2046	DTMF index. Datafill this field only if DTMFSEL = Y. Enter an index into table OADTFPRF.
CAUSEPRF		see subfield CAUSESEL	Cause profile. This field consists of subfield CAUSESEL.
	CAUSESEL	Y or N	Cause select. Enter Y to trigger for ISUP cause events and datafill subfield CAUSEIDX. Otherwise, enter N.
	CAUSEIDX	0 to 2046	CAUSE index. Datafill this field only if CAUSESEL = Y. Enter an index into table OACAUPRF.

Datafill example for table OACNNPRF

The following example shows sample datafill for table OACNNPRF.

MAP display example for table OACNNPRF

```
CONNIDX  PROFILE                              DTMFPRF  CAUSEPRF
-------------------------------------------------------------
0        (NOANS Y FUNCTION ROUTE_NODE)  Y 7      Y 3
1        (NOANS Y CTRLLIST Y_PAGES)     N        Y 3
```

Error messages for table OACNNPRF

The following error messages apply to table OACNNPRF.

Error messages for table OACNNPRF

Error message	Explanation and action
`NOT A VALID CONNECTION TRIGGER`	This message is displayed if an attempt is made to datafill an invalid value in field TRIGGER. Valid values are TRMT, OPLSF, NOANS, FLASH CLGD, and ANS.
`Only one action assignment allowed per trigger`	This message is displayed if an attempt is made to add or change a tuple with more than one action assigned to the same trigger.
`DTMF index is not in table OADTFPRF`	This message is displayed if an attempt is made to datafill field DTMFIDX with a value not in table OADTFPRF.
`CAUSE index is not in table OACAUPRF`	This message is displayed if an attempt is made to datafill field CAUSEIDX with a value not in table OACAUPRF.

Datafilling table OATPRFIX

OSSAIN Trigger Profile Index was a new table in TOPS06 that indexes into tables OACNNPRF, OATLKPRF, and OADSCPRF. Table OATPRFIX aggregates the OACNNPRF/OATLKPRF/OADSCPRF profile indices into a single call trigger profile index. This aggregation allows for ease in assigning the initial call trigger profile index in Table OAINCTLA.

Tables OACNNPRF, OATLKPRF, and OADSCPRF must be datafilled prior to datafilling this table.

OSSAIN 07 Enhancements (continued)

Following is a description of the table:

Datafilling table OATPRFIX

Field	Subfield or refinement	Entry	Explanation and action
IDX		0 to 2046	Index. Index into table from table OAINCTLA.
CPROFIDX		See subfield PROFSEL	Connection profile index. This field consists of subfield PROFSEL.
	PROFSEL	N or Y	Connection profile select. Enter Y to index into table OACNNPRF and datafill refinement PROFIDX. Otherwise, enter N.
	PROFIDX	0 to 2046	Connection profile index. If PROFSEL = Y, enter an index into table OACNNPRF.
TPROFIDX		See subfield PROFSEL	Talking profile index. This field consists of subfield PROFSEL.
	PROFSEL	N or Y	Talking profile select. Enter Y to index into table OATLKPRF and datafill refinement PROFIDX. Otherwise, enter N.
	PROFIDX	0 to 2046	Talking profile index. If PROFSEL = Y, enter an index into table OATLKPRF.
DPROFIDX		See subfield PROFSEL	Disconnect profile index. This field consists of subfield PROFSEL.
	PROFSEL	N or Y	Disconnect profile select. Enter Y to index into table OADSCPRF and datafill refinement PROFIDX. Otherwise, enter N.
	PROFIDX	0 to 2046	Disconnect profile index. If PROFSEL = Y, enter an index into table OADSCPRF.

Datafill example for table OATPRFIX

The following example shows sample datafill for table OATPRFIX.

MAP display example for table OATPRFIX

```
IDX  CONNIDX  TALKIDX  DISCIDX
-------------------------------------------------------
0     Y 4      Y 2      Y 7
1     Y 2      Y 2      Y 3
```

Error messages for table OATPRFIX

The following error messages apply to table OATPRFIX.

Error messages for table OATPRFIX

Error message	Explanation and action
`Connection profile is not in table OACNNPRF`	This message is displayed if an attempt is made to datafill field CPROFIDX with a value not in table OACNNPRF
`Talking profile is not in table OATLKPRF`	This message is displayed if an attempt is made to datafill field TPROFIDX with a value not in table OATLKPRF
`Disconnect profile is not in table OADSCPRF`	This message is displayed if an attempt is made to datafill field DPROFIDX with a value not in table OADSCPRF

Datafilling table OAINCTLA

OSSAIN Control List Assignment was a new table in TOPS06 that defines the OSSAIN control list (list of services applied sequentially) and call trigger profile index for each CT4Q name utilized by OSSAIN. Each CT4Q datafilled in this table must first be assigned in table CT4QNAMS with the SYSTEM selector set to OSSAIN. The control list names must be datafilled in table OACTLDEF. The profile index must be datafilled in table OATPRFIX.

Tables CT4QNAMS, OACTLDEF, and OATPRFIX must be datafilled before table OAINCTLA.

Following is a description of the table:

Datafilling table OAINCTLA

Field	Subfield or refinement	Entry	Explanation and action
CT4Q		name from table CT4QNAMS	Call type for queueing name. Index into table from table CT4QNAMS. Each CT4Q datafilled in this table must first be assigned in table CT4QNAMS with the SYSTEM selector set to OSSAIN.
OALISTNM		control list name from table OACTLDEF.	OSSAIN list name. A control list is a list of services that are applied sequentially.

OSSAIN 07 Enhancements (continued)

Datafilling table OAINCTLA

Field	Subfield or refinement	Entry	Explanation and action
OATPRFIX		See subfield PROFSEL.	OSSAIN profile prefix. This field consists of subfield PROFSEL.
	PROFSEL	N or Y	OSSAIN profile select. Enter Y to index into table OATPRFIX and datafill refinement IDXVAL. Otherwise, enter N.
	IDXVAL	0-2046	OSSAIN profile index. If PROFSEL = Y, enter an index into table OATPRFIX.

Datafill example for table OAINCTLA

The following example shows sample datafill for table OAINCTLA.

MAP display example for table OAINCTLA

```
CT4Q        OALISTNM        OATPRFIX
-------------------------------------------------------
0+YELLOW    YEL_PAGE        Y 7
OSS_DA      DA_SYSTEM       Y 1
```

Error messages for table OAINCTLA

The following error messages apply to table OAINCTLA.

Error messages for table OAINCTLA

Error message	Explanation and action
`Trigger profile is not in table OATPRFIX`	An attempt is made to add or change a tuple to utilize a trigger profile not yet datafilled in table OATPRFIX.

Datafilling table OAINPARM

OSSAIN Parameters was a new table in TOPS06 that contains OSSAIN specific parameters.

In TOPS07, parameter ALT_BILL_HANDOFF_METHOD is added and the range for NOTIFY_TIMER is increased from 0-3600 to 0-32400.

The profile index must be datafilled in table OATPRFIX prior to datafilling in table OAINPARM.

The following is a description of the table:

Datafilling table OAINPARM

Parameter name	Explanation and action
ADACC_ALT_ BILL_INDEX	This parameter indicates if an ADACC call requiring alternate billing can be routed to an OSSAIN service node by a Control List for billing verification. The values are: • N - No, do not attempt to route to OSSAIN. Then, ADACC alternate billing calls are sent to AABS. This is the same handling as prior to OSSAIN. • Y <number> - Yes, attempt to route to OSSAIN using the specified control list number previously datafilled in table OACTLDEF. The call will fail to route to OSSAIN due to any one of the following conditions: — The call is not sent to a control list that routes to a service node. — OSSAIN is not available due to lack of software resources. — OSSAIN is not SOCed on. — The call is not using the QMS queuing system. If any of the above conditions occur, the call is treated as if ADACC_ALT_BILL_INDEX was set to N.
ALT_BILL_ HANDOFF_ METHOD	This parameter specifies handling of operator handoff calls. The values are the following: • AABS - Calls are sent to the existing TOPS AABS system for billing acceptance, provided the call passes various checks that verify the call's eligibility for handoff. This functionality does not change the checks that are done for AABS handoff, nor any operator displays. This is the default value. With an AABS handoff, VSNOPT parameter NUM_HANDOFFS_ALLOWED specifies the maximum number of handoffs that a single call can undertake. This parameter continues to apply to handoffs to AABS, but not OSSAIN service nodes. • OSSAIN <ct4q> - Calls are placed in the specified CT4Q and then routed to an OSSAIN service node. The CT4Q must be datafilled in table CT4QNAMS with field SYSTEM set to OSSAIN. For more information on how the call is routed to an OSSAIN service node using a CT4Q, refer to section “Transitions" where transfers are discussed for an operator to an OSSAIN service node. When the operator marks a call for handoff, eligibility checks are the same for AABS and OSSAIN service nodes. In particular, it should be noted that VSNOPT parameter NUM_AUTO_LANGS_REQD_FOR_HANDOFF applies equally to operator handoffs for AABS and OSSAIN service nodes. If any of the eligibility checks fail, the operator receives the same error displays for the failed AABS or OSSAIN handoff mark.

OSSAIN 07 Enhancements (continued)

Datafilling table OAINPARM

Parameter name	Explanation and action
AUTO_ALT_BILL_ TRIG_PROFILE_ INDEX	Enables/disables OSSAIN floated trigger processing for calls floated by the Automated Alternate Billing System (AABS) or Mechanized Credit Card System (MCCS). If enabled, a trigger profile index into table OATPRFIX must be specified in the parameter entry. This trigger profile index is only applied to a call floated by AABS or MCCS if the call has not yet received OSSAIN processing. Its purpose is to provide an initial profile index. For calls floated by AABS or MCCS already receiving OSSAIN service the trigger profile index is not modified. The range is N (disable) and Y (enable). If set to Y, add value in range 0 to 2046 for an index into table OATPRFIX.
CALL_SANITY_ TIMER_ DURATION	This is a timer to ensure that service node connections (data and/or voice), subscriber connections, and switch related call resources such as extension blocks are not left connected to a dead call. The timer is set when no parties (calling and called) are present (either disconnected or the on-hook timer has expired). The timer is cleared if the subscriber is subsequently connected to the call. The duration of the timer is determined by this parameter, but can be overridden by field CALLTMR in table OASESNPL. If set to USEDEFLT, parameter CALL_SANITY_TIMER_DURATION determines the timer duration. If CALLTMR = OVERRIDE, the value after this field gives the duration of the timer. When the timer expires, the call is taken down by the switch and an OAIN601 log is generated. The switch informs the node that the call has been taken down, releases the data and voice connections to the node, releases all subscriber connections involved in the call, cancels any outstanding requests, and frees all switch related call resources (for example, extension blocks, and so forth). The range of parameter CALL_SANITY_TIMER_DURATION is 1 to 3600 seconds. The default is 60.
DEFAULT_ TREATMENT	This parameter indicates the treatment name from table TMTCNTL to route the call to if a default treatment is required for an OSSAIN call.
MAX_ALLOWED_ TRANSITIONS	This parameter indicates the maximum number of allowed successful transitions which consist of direct transfers to control lists. When the number of transitions reaches the value of this parameter, the call is routed to the treatment specified in parameter DEFAULT_TREATMENT of this table (OAINPARM). There is a counter for each call which is zeroed at the beginning of the call and at any time that call is floated. The counter is incremented each time a successful direct transfer to a control list occurs. The purpose of this parameter is to prevent the call from going into an endless number of cycles. The range of this parameter is 0 to 20. The default is 5.

OSSAIN 07 Enhancements (continued)

Datafilling table OAINPARM

Parameter name	Explanation and action
MAX_NUM_ TRIGGERS	This parameter determines the maximum number of times a call is allowed to trigger during call float. This prevents the call from going into an endless number of cycles. The range is 0 to 100.
MAX_ TRANSFERS_ BEFORE_ CONNECT	This parameter indicates the maximum number of transfers that can occur while attempting to connect a call to a service node for a particular function. Transfers in the switch can result from a QMS deflection or overflow, a blocked function, and, or a failure to send an OAP Session Begin message to a node after the session for the call has already been selected. When the number of transfers reaches the value of this parameter, the call is routed to the treatment specified in DEFAULT_TREATMENT. Once a successful connection to a service node is made, the switch resets its internal transfer counter. The range of values is 0 to 5.
NOANS_TIMER	The amount of time to wait for an answer to a call before the No Answer trigger occurs. The range is 1 to 120 (seconds).
NOTIFY_TIMER	The amount of time a call must spend in the talking state for the Notification trigger event to occur. The range is 0 to 32400 (seconds).

OSSAIN 07 Enhancements (continued)

Datafilling table OAINPARM

Parameter name	Explanation and action
ON_HOOK_ TIMER_ DURATION	This is a timer to ensure that a call does not remain connected forever after a subscriber goes on-hook or is released. This timer may not apply to standard ISUP since ISUP facilities can automatically be cleared upon disconnect. The timer is set when the subscriber goes on-hook and cannot be reset. The timer is cleared if the subscriber's facility is released or the call is taken down for any reason. The duration of the timer is determined by this parameter, but can be overridden by field ONHKTMR in table OASESNPL. If set to USEDEFLT, parameter ON_HOOK_TIMER_DURATION determines the timer duration. If ONHKTMR = OVERRIDE, the value after this field gives the duration of the timer. If the timer expires, an OAIN600 log is generated and the call sanity timer is initiated if appropriate. Refer to the CALL_SANITY_TIMER_DURATION parameter in this table (OAINPARM) for further details. The range of parameter ON_HOOK_TIMER_DURATION is 1 to 3600 (seconds). The default is 60.
OPR_TRIGGER_ PROFILE_INDEX	Enables/disables OSSAIN floated trigger processing for calls floated by the operator. If enabled, a trigger profile index into table OATPRFIX must be specified in the parameter entry. This trigger profile index is only applied to a call floated by the operator if the call has not received OSSAIN processing. (Note, OSSAIN processing is indicated once an OSSAIN control list or OSSAIN function has been assigned to the call.) For calls floated by the operator that are already receiving OSSAIN service, the trigger profile index is not modified. Calls receiving Directory Assistance (DA) service perform trigger processing pointed to by OPR_TRIGGER_PROFILE_INDEX. This is done since DA calls receive operator handling. This includes calls receiving ADAS, ADASPLUS, and ADACC services. Directory assistance calls must first perform call completion service to be eligible for trigger processing. The range is N or Y. If set to Y, add value in range 0 to 2046 for an index into table OATPRFIX.

Datafill example for table OAINPARM

The following example shows sample datafill for table OAINPARM.

MAP display example for table OAINPARM

```
PARMNAME                                          PARMVAL
-------------------------------------------------------
ADACC_ALT_BILL_INDEX                               Y 100
ALT_BILL_HANDOFF_METHOD                            OSSAIN DA_411
AUTO_ALT_BILL_TRIG_PROFILE_INDEX                   Y 2
CALL_SANITY_TIMER_DURATION                         423
DEFAULT_TREATMENT                                  TREAT VACT
MAX_ALLOWED_TRANSITIONS                            15
MAX_NUM_TRIGGERS                                   15
MAX_TRANSFERS_BEFORE_CONNECT                       5
NOANS_TIMER                                        20
NOTIFY_TIMER                                       180
ON_HOOK_TIMER_DURATION                             368
OPR_TRIGGER_PROFILE_INDEX                          Y 7
```

Error messages for table OAINPARM

The following error messages apply to table OAINPARM.

Error messages for table OAINPARM

Error message	Explanation and action
`Trigger profile is not in table OATPRFIX`	This message is displayed if an attempt is made to add or change a parameter with a trigger profile index not datafilled in table OATPRFIX.

OSSAIN 07 Enhancements (continued)

Datafilling table TOPSPARM

The following parameters were added in TOPS06:

Datafilling table TOPSPARM

Parameter name	Explanation and action
DISPLAY_ CALLED_ NUMBER	This parameter indicates the type of TOPS position to receive the called number from the DMS switch, if sent. Following are the values: • NONE - The called number is not sent to any TOPS position. • MP - The called number is sent and displayed at TOPS MP positions. • OPP - The called number is sent and displayed at OPP-compatible positions. • BOTH - The called number is sent and displayed at both TOPS MP and OPP-compatible positions.
AUTO_ OUTPULSE_ UPON_CCV_ SUCCESS	This parameter determines whether the DMS switch automatically outpulses the forward number if a valid calling card is entered. The values are Y (auto outpulse, the same as prior to OSSAIN) and N (no auto outpulse).

Datafill example for table TOPSPARM

The following example shows sample datafill for table TOPSPARM.

MAP display example for table TOPSPARM

```
PARMNAME                                        PARMVAL
------------------------------------------------------------
DISPLAY_CALLED_NUMBER                           NONE
AUTO_OUTPULSE_UPON_CCV_SUCCESS                  Y
```

Datafilling table TOPSPOS

The following table shows the datafill specific to OSSAIN 07 Enhancements for table TOPSPOS. Only those fields that apply directly to OSSAIN 07

OSSAIN 07 Enhancements (continued)

Enhancements are shown. For a description of the other fields, refer to the data schema section of this document.

Datafilling table TOPSPOS

Field	Subfield or refinement	Entry	Explanation and action
POSNO			This table is not changed. In an OSAC environment, position numbers must be distinct (not shared) across the network. That is, position numbers must be unique between the OSAC host and OSAC remotes.

Datafill example for table TOPSPOS

The following example shows sample datafill for table TOPSPOS.

MAP display example for table TOPSPOS

```
POSNO
                    VCCKT VCPDGRP  CARDCODE
                                                DATAPATH

                                                              POSAREA
-----------------------------------------------------------------------
546
            TMS   1  1  4   NPDGP    DS1SIG
                                     TMS MP ASCII 107  1
                                              OPR  5 TOPSACD ALL ALL
```

Translation verification tools

QCALL and QVIEW utilities

The QCALL and QVIEW utilities were modified in TOPS06. Prior operation of these utilities is described in the Remote QMS functionality, ADVQ0004.

QCALL utility

The QCALL directory details the refinement and call assignment information of one particular call having a unique set of characteristics.

The START command displays the final CT4Q assignment information based on the call criteria. This command is changed to add information for OSSAIN. For CT4Qs assigned to an operator, the CallQ and QMS Service are displayed. For CT4Qs assigned to OSSAIN, the OSSAIN Control List is displayed. Following is an example display where the new information is highlighted:

OSSAIN 07 Enhancements (continued)

QCALL START command example display of final CT4Q assignment information

```
STARTing simulated call queue assignment processing.

   Initial CT4Q = UNSPEC
     CT4Q after CT4QCLAS refinement = UNSPEC
     CT4Q after CT4QORIG refinement = UNSPEC

   The final CT4Q is: DEBIT
   The OA Control List is: DEBIT_LIST

Determining Force Management Call Type (FMCT)

   Initial FMCT = UNSPEC
     FMCT after TQFMCLAS refinement = UNSPEC
     FMCT after TQFMREST refinement = UNSPEC
     FMCT after TQFMDCLT refinement = DEBIT

The final FMCT is: DEBIT
```

QVIEW utility

The QVIEW directory details the refinement and call assignment information of a whole set of calls with all of their possible characteristics.

The START command displays the final CT4Q assignment information based on call criteria. This command is changed to add information for OSSAIN. For CT4Qs assigned to an operator, the CallQ and QMS Service are displayed. For CT4Qs assigned to OSSAIN, the OSSAIN Control List is displayed. Following is an example display where the new information is highlighted.

The report generated by this command has changed to display either the CallQ and QMS service for calls routed to a TOPS operator or a control list for calls routed to OSSAIN. To accommodate this, the old header CALLQ QMSSERV has been changed to a more general heading, ASSIGNMENT INFO. If the CT4Q is for use by a TOPS operator, the CallQ and QMS service are displayed beneath this header. If the CT4Q is for use by OSSAIN, the control list is displayed beneath the header.

QVIEW report example

```
          ** QVIEW REPORT on ACTIVE table for PREOPR Ordering

              CO: OA                      -->>> CT4Q: 0_DEBIT

OLDCT4Q       TABLE     CRITERION    NEWCT4Q          ASSIGNMENT INFO

0_DEBIT       ORIG       T1_ORIG     DEBIT_0          CTRL: DEBIT_CTL
0_DEBIT       ORIG       T1_ORIG     DEBIT_1          CTRL: DEBIT_CTL
0_DEBIT       ORIG       T1_ORIG     DEBIT_2          CTRL: DEBIT_CTL
0_DEBIT        OAINCTLA                                DEBIT_CTLC


              CO: OA                      -->>> CT4Q: INWARD_121


OLDCT4Q       TABLE     CRITERION     NEWCT4Q         ASSIGNMENT INFO

INWARD_121     ORIG      T1_ORIG      MP1_INW          CQ53  T_TA
INWARD_121     ORIG      T2_ORIG      MP1_INW          CQ63  T_TA
INWARD_121     ORIG      T3_ORIG      MP1_INW          CQ83  T_TA
INWARD_121     TQMSFCQA                                CQ8   T_TA

------------------------------------------------------------------------
 SUMMARY REPORT on ACTIVE table for PREOPR Ordering
------------------------------------------------------------------------
      CT4Q TABLE                NUMBER OF REFINEMENTS
      ----------                ---------------------
        CT4QORIG                          3

CT4Qs NOT assigned a call queue or control list:

         CT4Q                           TABLE
        -------                         -----

CALLQs NOT assigned a QMS service:
```

In the above example, the first part illustrates assignment information for a CT4Q routing to an OSSAIN control list called DEBIT_CT. The second part illustrates assignment information for a CT4Q assigned a CallQ and Service.

SERVORD

TOPS does not use SERVORD.

System name

North American DMS-100

TOPS Translations Guide Volume 3 of 5

Groups ABS, ENSV, and OSAN

electronic mail: cits@nortelnetworks.com

Copyright © 1996-2001 Nortel Networks,
All Rights Reserved

NORTEL NETWORKS CONFIDENTIAL: The information contained herein is the property of Nortel Networks and is strictly confidential. Except as expressly authorized in writing by Nortel Networks, the holder shall keep all information contained herein confidential, shall disclose the information only to its employees with a need to know, and shall protect the information, in whole or in part, from disclosure and dissemination to third parties with the same degree of care it uses to protect its own confidential information, but with no less than reasonable care. Except as expressly authorized in writing by Nortel Networks, the holder is granted no rights to use the information contained herein.

Informaton id subject to change without notice. Northern Telecom reserves the right to make changes in design or components as progress in engineering and manufacturing may warrant.

Trademark information

Publication number: 297-8403-910
Product release: TOPS15 and up
Document release: Standard 01.01
Date: May 2001
Printed in the United States of America

NORTEL NETWORKS™

How the world shares ideas.