297-8403-910

DMS-100 Family

North American DMS-100

TOPS Translations Guide Volume 2 of 5

Group OSB

TOPS15 and up Standard 01.01 May 2001

NORTEL NETWORKS
How the world shares ideas.

DMS-100 Family

North American DMS-100

TOPS Translations Guide Volume 2 of 5

Group OSB

Publication number: 297-8403-910
Product release: TOPS15 and up
Document release: Standard 01.01
Date: May 2001

Copyright © 1996-2001 Nortel Networks,
All Rights Reserved

Printed in the United States of America

NORTEL NETWORKS CONFIDENTIAL: The information contained herein is the property of Nortel Networks and is strictly confidential. Except as expressly authorized in writing by Nortel Networks, the holder shall keep all information contained herein confidential, shall disclose the information only to its employees with a need to know, and shall protect the information, in whole or in part, from disclosure and dissemination to third parties with the same degree of care it uses to protect its own confidential information, but with no less than reasonable care. Except as expressly authorized in writing by Nortel Networks, the holder is granted no rights to use the information contained herein.

Informaton id subject to change without notice. Northern Telecom reserves the right to make changes in design or components as progress in engineering and manufacturing may warrant.

Contents

Group OSB

1 Datafilling Operator Services Basic (continued) 1-1

TOPS AMA Enhancements 1-2
TOPS AMA Modifications-U.S. only 1-13
TOPS and Succession Interworking 1-29
TOPS AWT Enhancements 1-44
TOPS BC/STS/SNPA 1-55
TOPS Bellcore AMA 1-74
TOPS Call Processing Features (Administration) 1-97
TOPS Call Processing Features (Billing) 1-187
TOPS Call Processing Features (Call Processing) 1-229
TOPS Call Processing Features (Coin) 1-356
TOPS Call Processing Features (Connected Calls) 1-394
TOPS Call Processing Features (Global and Mobile) 1-446
TOPS Call Processing Features (Rating) 1-468
TOPS/Carrier Interworking 1-575
TOPS City Zone Rating 1-613
TOPS Close Down 1-622
TOPS DA Subtending TMS 1-654
TOPS E911 1-738
TOPS Extended BCAMA-EBAF 1-749
TOPS IDDD 15 Digit Expansion 1-820
TOPS Increased Multiplexing 1-837
TOPS Inward Validation 1-993
TOPS MP Interface 1-998
TOPS Multi-NPA Support 1-1006
TOPS NOTIS Format 1-1019
TOPS On/off Switch 1-1025
TOPS Open Position Protocol 1-1027
TOPS Operator Password 1-1034
TOPS Remote CAMA 1-1038
TOPS Robustness 1-1054
TOPS11 Robustness and Real Time Recovery 1-1065
TOPS SDM Interworking 1-1067
TOPS Service Billing 1-1070
TOPS SPM Interworking 1-1086
TOPS Two Terminal DA/Intercept 1-1091

Year 2000 1-1114
Treatment for Intercept Failure 1-1117
Two Digit ANI TOPS Office 1-1122

Multi-Volume Contents

TOPS Translations Guide Volume 1 of 5
Group OSB

About this document v

How to check the version and issue of this document v
References in this document v
What precautionary messages mean vii
How commands, parameters, and responses are represented ix
Input prompt (>) ix
Commands and fixed parameters ix
Variables ix
Responses ix

1 Reference information 1-1

Revision history 1-1
TOPS15 changes 1-1
TOPS14 changes 1-2
TOPS13 changes 1-4
TOPS12 changes 1-5
TOPS11 changes 1-6
TOPS10 changes 1-7
TOPS09 changes 1-8
TOPS08 changes 1-10
TOPS07 changes 1-10
TOPS06 changes 1-12
TOPS05 changes 1-14
TOPS04 changes 1-16
TOPS03 changes 1-18
Preset office parameters 1-21

2 Datafilling Operator Services Basic 2-1

800+ Interworking with LNP 2-2
AMA Table 281 2-11
Attendant Pay Station 2-18
AudioGram Delivery Services-Offer of Service Prompt 2-44
Auto Country Direct 2-106
Automatic OIA Session Start 2-185
Billing Enhancements for EA Calls 2-189

Carrier Selection 2-196
Code Removal of TOPS IV 2-223
Directory Assistance/Toll Branding 2-230
DNSCRN Enhancements 2-258
Enhanced MFADS 2-265
Enhanced TOPS OC and Increased Remote Support 2-280
EOL for TOPS14 2-334
EOL for TOPS15 2-339
Estimated Call Charges 2-343
External Audio Response Host and Remote 2-351
FMCRT Elimination 2-371
GDP Support Location Digit Type 2-380
Host MP OC Data Link 2-383
Host OC Data Link 2-389
Host/Remote Networking by Queue Type 2-422
Improved STATSPAC 2-464
Interface Signaling 2-471
Logical TID for Time and Charges Recall 2-479
MD Code Removal and ReEngineering 2-481
Music and Announcement in Queue 2-497
New Access Method for SN 2-531
Operator Dial-up Autoquote 2-534
PICNAME Expansion 2-550
Position/Device Evolution IP 2-555
Pre-paid Coin 2-581
QMS Billing Indicator 2-595
QMS Customer Service Enhancements 2-604
QMS Host/Remote Queuing 2-679
Queue by Called Type 2-883
Remote MP OC Data Link 2-893
Remote OC Data Link 2-901
RU Robustness 2-929
Screened Service Routing 2-931
Table LATANAME Expansion 2-942
Table TOPSDISP Expansion 2-966
TCAP TRID Replacement 2-972
TMS Networking 2-976
TMS Processor Upgrade 2-999
TOPS06 Robustness 2-1020
TOPS ACD Features 2-102
TOPS Alternate Announcement 2-1058

TOPS Translations Guide Volume 2 of 5

Group OSB (continued)

1 Datafilling Operator Services Basic (continued) 1-1

TOPS AMA Enhancements 1-2
TOPS AMA Modifications-U.S. only 1-13
TOPS and Succession Interworking 1-29
TOPS AWT Enhancements 1-44
TOPS BC/STS/SNPA 1-55
TOPS Bellcore AMA 1-74
TOPS Call Processing Features (Administration) 1-97
TOPS Call Processing Features (Billing) 1-187
TOPS Call Processing Features (Call Processing) 1-229
TOPS Call Processing Features (Coin) 1-356
TOPS Call Processing Features (Connected Calls) 1-394
TOPS Call Processing Features (Global and Mobile) 1-446
TOPS Call Processing Features (Rating) 1-468
TOPS/Carrier Interworking 1-575
TOPS City Zone Rating 1-613
TOPS Close Down 1-622
TOPS DA Subtending TMS 1-654
TOPS E911 1-738
TOPS Extended BCAMA-EBAF 1-749
TOPS IDDD 15 Digit Expansion 1-820
TOPS Increased Multiplexing 1-837
TOPS Inward Validation 1-993
TOPS MP Interface 1-998
TOPS Multi-NPA Support 1-1006
TOPS NOTIS Format 1-1019
TOPS On/off Switch 1-1025
TOPS Open Position Protocol 1-1027
TOPS Operator Password 1-1034
TOPS Remote CAMA 1-1038
TOPS Robustness 1-1054
TOPS11 Robustness and Real Time Recovery 1-1065
TOPS SDM Interworking 1-1067
TOPS Service Billing 1-1070
TOPS SPM Interworking 1-1086
TOPS Two Terminal DA/Intercept 1-1091
Year 2000 1-1114
Treatment for Intercept Failure 1-1117
Two Digit ANI TOPS Office 1-1122

TOPS Translations Guide Volume 3 of 5

Groups ABS, ENSV, and OSAN

1 Datafilling Alternate Billing Services 1-1

AABS Call Screening 1-2
AABS Enhanced Services Access 1-20
Account Code Billing 1-51
Automated Alternate Billing Service 1-61
Automated Room and Authorization Number 1-117
Calling Card Denial Reasons 1-139
Disallowed Card Issuer Blocking 1-143
Exchange Alternate Billing Service 1-164
Exchange Alternate Billing Service (MCCS) 1-261
Exchange Alternate Billing Service - Canada 1-298
Expanded Calling Card Format SS7 1-341
French/English AABS 1-378
Operator handoff to the AABS 1-388
TOPS Authorization Code Billing 1-401
TOPS Commercial Credit Card 1-423
TOPS DN Call Screening 1-453
TOPS OLNS Interface 1-472

2 Datafilling Enhanced Services 2-1

Automatic Coin Toll Service 2-2
External RTRS Interface 2-48
IN Operator Backup 2-113
OLNS Foreign Language 2-131
OLNS Support of No Automation 2-142
Seconds Based Announcements 2-151

3 Datafilling Operator Services AIN 3-1

OSSAIN Initial Release 3-2
OSSAIN 07 Enhancements 3-151

TOPS Translations Guide Volume 4 of 5
Groups OSAN (continued), OSDA, and OSEA

1 Datafilling Operator Services AIN (continued) 1-1

OSSAIN 09 Enhancements 1-2
OSSAIN 10 Enhancements 1-33
OSSAIN 11 Enhancements 1-54
OSSAIN 12 Enhancements 1-123
OSSAIN Session Pricing 1-166

2 Datafilling Operator Services Directory Assistance 2-1
Automated DA Service 2-2
Automated DACC with Alternate Billing 2-119
Automated Intercept Call Completion 2-171
Cellular/IEC/LEC ADACC 2-204
DA Automation I/F 2-289
DACC Enhancements I 2-323
IBM Switch DAS/C Protocol 2-342
Miscellaneous DA Enhancements 2-377
Multiple DA System I 2-383
Standard Switch DAS/C Protocol 2-404
TOPS DA Call Processing 2-410
TOPS MP Support of Internal DRAM 2-477

3 Datafilling Operator Services Equal Access 3-1
Base TOPS Equal Access 3-2
Equal Access Carrier Code Expansion 3-124
FGB Carrier Code Expansion 3-137
GR317/GR394 ISUP to/from TOPS 3-164
OLNS IntraLATA Presubscription 3-212
Operator Services Network Capability 3-226
OSNC Enhancements 3-273
TOPS Bellcore LNP Enhancements 3-290
TOPS Canadian Equal Access 3-308
TOPS Carrier RLT 3-312
TOPS Carrier RLT-2 3-313
TOPS Exchange Access Operator Services Signaling 3-314
TOPS Flex ANI 3-410

TOPS Translations Guide Volume 5 of 5
Groups OSEA (continued), OSI, TPC, and UNBN

1 Datafilling Operator Services Equal Access (continued) 1-1
TOPS Incoming FGD Signaling 1-2
TOPS Inter-LATA Carrier 1-73
TOPS LNP 1-147

2 Datafilling Operator Services Information 2-1
Procedure: Adding an MPX Position 2-2
Procedure: Adding an OC Data Link Group 2-8
Procedure: Adding an OC Data Link Member 2-13
Procedure: Adding an OC Voice Link Group 2-16
Procedure: Adding an OC Voice Link Member 2-25
Procedure: Deleting an MPX Position 2-31
Procedure: Deleting an OC Data Link Group 2-32
Procedure: Deleting an OC Data Link Member 2-35

Procedure: Deleting an OC Voice Link Group 2-37
Procedure: Deleting an OC Voice Member 2-42
Reference: ANI to ISUP Conversion 2-44
Reference: DA Guidelines 2-51
Reference: TOPS Call Descriptions 2-71
Reference: TOPS MPX Guide 2-232
Reference: TOPS Related Office Parameters 2-252
Reference: TOPS Trunk Selection 2-272

3 Datafilling TOPS Position Controller 3-1
TOPS MP Terminal Support 3-2

4 Datafilling Unbundling 4-1
UNBN Billing Changes 4-2
UNBN Call Restrictions for Wholesaling 4-24
UNBN OPRTRANS and EA 4-50
UNBN Queueing 4-99
UNBN Screening for Billing Agreement 4-111
UNBN SPID Assignment 4-154
UNBN SPID Branding 4-182
UNBN Statistics 4-196
UNBN Translations and Routing 4-203

1 Datafilling Operator Services Basic (continued)

This chapter contains the operator services basic functionalities.

TOPS AMA Enhancements

Ordering codes

Functional group ordering code: OSB00101

Functionality ordering code: not applicable

Release applicability

BCS34 and up

Prerequisites

To operate, TOPS AMA Enhancements has the following prerequisites:

- BAS Generic, BAS00003
- Table TOPSFTR parameter TOPS_ON_OFF_SWITCH = Y
- TOPS Bellcore AMA, OSB00101

Description

This functionality is provided by the following features:

Feature number	Feature name
AF1715	TOPS EBAF Extensions

This package expands on TOPS Expanded Bellcore Automatic Message Accounting (AMA) Format (EBAF), OSB00101.

Operation

Background

A phased approach is taken toward implementing TOPS EBAF. This allows for an orderly transition between the Bellcore format that exists prior to TOPS EBAF and the Bellcore format that exists with TOPS EBAF. Phase 0 is the BellCORE AMA format prior to TOPS EBAF. Phase 1 introduces the module concept without the new structure codes and call type codes. Phase 2 is the complete modular approach, including new structure codes and call type codes.

Determination of the TOPS EBAF Phase is based upon the value of tuple EBAF_PHASE in table TOPS AMA Options (TOPAMAOP) and data in table EBAF Trunk Phase (EBAFTKPH). Tuple EBAF_PHASE sets the default phase for the entire office. Table EBAFTKPH allows that phase to be overwritten with a higher phase (determined on an incoming trunk group basis). If the incoming trunk group phase is higher than the phase in tuple EBAF_PHASE, then the value in field PHASE is used for the EBAF phase (on

an incoming trunk group basis). The following exhibit shows table TOPAMAOP as it exists prior to this feature and an example datafill for table EBAFTKPH.

MAP display example for table TOPAMAOP (prior to this feature)

```
Table:  TOPAMAOP

AMAOPT                                  OPTINFO
----------------------------------------------
EBAF_PHASE                               PHASE1
EA_SERV_PROCESSING_TIME                       Y
RECORD_REQUESTED_NUMBER_FOR_DA                N
```

MAP display example for table EBAFTKPH

```
Table:  EBAFTKPH

CLLI            PHASE
----------------------
TOPCOMAMF       PHASE0
TOPCOMBMF       PHASE2
TOPCOMCMF       PHASE1
```

Given the above datafill, calls originating on trunk group TOPCOMAMF would record in Phase 1, calls originating on trunk group TOPCOMBMF would record in Phase 2, and calls originating on trunk group TOPCOMCMF would record in Phase 1.

See the Appendix for example TOPS EBAF AMA records for each of the three phases.

Enhanced 800 Service

Enhanced 800 Service is an interexchange service in which the called party, rather than the calling party, subscribes to the service and pays for toll calls. For more details on the Enhanced 800 Service, see SS7 - E800/SSP. When an operator enters an 800 called number at the TOPS position, and Enhanced 800 Service is offered for that number, a database query is launched to a Number Service Code (NSC) database.

TOPS AMA Enhancements (continued)

The database returns the following information:

- Destination number, which is used by translations for routing
- Revenue Accounting Office (RAO) number, which identifies a specific RAO
- Out of Band Indicator, which indicates if the Destination number is out of the calling party's call zone

New tuple RECORD_800_SERVICE_INFORMATION is added to table TOPAMAOP to determine whether or not to record this call information. If set to Y, then the Destination number, RAO number, and Out of Band Indicator are recorded for operator-assisted calls that provide call completion service for the Enhanced 800 number. The Out of Band Indicator information is recorded in existing module 304, Out of Band. The other information is recorded in a new module.

The Enhanced 800 Service information will only be recorded for Bell Canada's NSC database queries. In addition, if alternate billing is performed for this call, then the Enhanced 800 Service information will *not* be recorded. Alternate billing for this context refers to calls class charged station special calling, person special calling, station special called, person special called, or person call back special calling.

Operator Keying Actions

When a TOPS operator performs keying actions, call processing and administration may be affected. An indicator (per keying action) is recorded in the AMA record when the following keying actions are performed:

- NO CONN
- KP FWD + digits + START, KP OVERSEAS + digits + START, OGT (when field BILLNUM is set to Y), or ORDB (when the forward number is entered via ORDB)
- KP BACK + digits + START, ONI (when the back number is entered for ONI calls)
- XFR 1, 2, or DA
- CA TMG
- CA CALL
- RLS BACK
- KP TRBL

Note: The keying actions described are for the TOPS IV. The same AMA recording will take place for equivalent TOPS MP keying actions. See *TOPS MP Operator Guide* for details on TOPS MP keying actions.

This recording takes place for all operator-assisted calls when new tuple RECORD_OPERATOR_KEYING_ACTIONS in table TOPAMAOP is set to Y. When a GEN AMA is performed, these keying action indicators are reset.

Local Call Indicator

During translations, TOPS determines if a call is local to the calling party. If new tuple RECORD_LOCAL_CALL_INDICATOR in table TOPAMAOP is set to Y, then a local call indicator is set in the AMA record for all calls that provide call completion service.

Call Origination Type

During translations, TOPS determines the call origination type of a call. If new tuple RECORD_CALL_ORIGINATION_TYPE in table TOPAMAOP is set to Y, then the call origination type is recorded in the AMA record for all calls.

For details on the different TOPS call origination types, see Table TOPS in the data schema section of this document.

For 1+DD, ANI-success, non-coin, non-hotel calls, LAMA/CAMA AMA records are produced. These AMA records do not support modules. Therefore, the call origination type cannot be provided.

Overwritten Number

This function is not implemented in this feature, but will be implemented in a future release. A new tuple, RECORD_OVERWRITTEN_NUM, in table TOPAMAOP is created and presented in the Data Schema NTP, but is non-functional.

When a TOPS operator provides service for a call, it is sometimes necessary to change the called (forward) or special number. In these cases, the overwritten number is lost. However, it is sometimes necessary to save the old number for administrative use.

When new tuple RECORD_OVERWRITTEN_NUM in table TOPAMAOP is set to Y, and any of the following keying actions occur:

- KP FWD + digits + START
- KP OVERSEAS + digits + START
- KP SPL + digits + START

TOPS AMA Enhancements (continued)

- OGT (when field BILLNUM is set to Y)
- ORDB (when the forward number is entered via ORDB)

The called or special number is overwritten with a new number, then the old (overwritten) called or special number is recorded in the AMA record. Recorded with the old number is an indicator of the overwritten number type and a sequence number. This module can appear multiple times in one AMA record.

Hotel Guest Name and Room Number

Hotel calls may require a guest name and room number. If new tuple RECORD_GUEST_NAME_AND_ROOM_NUM in table TOPAMAOP is set to Y, then the hotel guest name and room number is recorded for all hotel calls.

Note: This module is *not* appended if either a guest name or a room number is unavailable.

Overseas Calling Card

Calls may be alternately billed to an overseas format calling card. These calling cards contain alphanumeric characters and are validated via datafill in the TOPS switch. An example overseas calling card format is: 33M169204.

Since module 052, Alternate Billing, cannot record alphanumeric characters, a new AMA module records the overseas format calling card. If new tuple RECORD_OVERSEAS_CALLING_CARD in table TOPAMAOP is set to Y, and a call is alternately billed to an overseas format calling card, then the calling card and validation results are recorded in the AMA record for the call. This module is recorded in place of the Alternate Billing module.

Originating Trunk Group Number

TOPS supports four originating trunk group types:

- Traffic Operator Position System (TOPS)
- Access To Carrier (ATC)
- Intertoll (IT)
- Remote Operator Number Identification (RONI)

These trunk group types are defined in table Trunk Group (TRKGRP). The key to the table is a Common Language Location Identifier (CLLI). These CLLIs are defined in table CLLI. Associated with every CLLI in this table is a fixed trunk group number defined by field Administration Number (ADNUM). Following is an example tuple from table CLLI.

MAP display example for table Example tuple from table CLLI

```
Table:  CLLI

CLLI             ADNUM    TRKGRSIZ          ADMININF
-------------------------------------------------
TOPCOMAMF         402        10               TOPIC
```

When new tuple RECORD_ORIGINATING_TRK_GRP_NUM in table TOPAMAOP is set to Y, the originating trunk group number, trunk member number, and trunk direction is recorded for all calls. Existing module 104, Trunk Identification, will record this information. For 1+DD, ANI-success, non-coin, non-hotel calls, LAMA/CAMA AMA records are produced. These AMA records do not support modules. Therefore, the originating trunk group number cannot be provided.

Translations table flow

Translations table flow is not provided for TOPS AMA Enhancements.

Limitations and restrictions

The following limitations and restrictions apply to TOPS AMA Enhancements:

- The AMA changes introduced by this feature are only available in Phase 2 EBAF.
- If alternate billing is provided for Enhanced 800 Service calls, then the Enhanced 800 Service information will *not* be recorded.
- Enhanced 800 Service information will only be recorded for Bell Canada's NSC database queries.
- A call origination type will not be recorded for 1+DD, ANI-success, non-coin, non-hotel calls.
- An originating trunk group number will not be recorded for 1+DD, ANI-success, non-coin, non-hotel calls.
- Modules Overwritten Number and Overwritten Number (EBCDIC) are defined but *not* implemented in this feature; they will be implemented in a future release.
- When the AMADUMP utility displays EBCDIC fields, each EBCDIC character is displayed as two BCD characters. For example, a field of six

TOPS AMA Enhancements (continued)

EBCDIC characters in length that contains all spaces would be displayed as 40404040404040404040404040.

Note: Each EBCDIC space, one character, is represented by “40", two BCD characters.

- Both the Overwritten Number and Overwritten Number (EBCIDIC) Modules are replicative, meaning more than one may be appended per record. When the maximum number (10) is appended, the AMA record becomes very large. This puts a restriction on the production of the AMAB200 log. This log is used for AMA test calls. The log has a size restriction, therefore, if the record is a test record and it is larger than the log system allows, then the log will not be produced.

Interactions

The following paragraphs describe the interactions between TOPS AMA Enhancements and other functionalities.

The feature, AF1715, is optional. It is part of TOPS AMA Enhancements, OSB00101, and interacts with all TOPS calls that produce a BellCORE format AMA record in TOPS EBAF Phase 2.

This feature requires TOPS BellCORE AMA, OSB00101, and TOPS Expanded BellCORE AMA Format, OSB00101.

Activation/deactivation by the end user

TOPS AMA Enhancements requires no activation or deactivation by the end user.

Billing

This feature introduces new modules to TOPS EBAF Phase 2 (Phase 0 and Phase 1 are not modified). New modules Enhanced 800 Service, Operator Keying Action, Local Determination, Origination Call Type, Overwritten Number, Overwritten Number (EBCDIC), Hotel Information, and Overseas Calling Card Billing, are added to TOPS EBAF. These new modules allow for the recording of call information not previously present in TOPS EBAF.

In addition, TOPS EBAF Phase 2 now supports two previously-defined modules: Out of Band and Fixed Trunk Group Number.

Following are the numbers for new AMAOPT modules that are recorded if the table TOPAMAOP, Field OPTINFO is set to Y.

TOPS AMA Enhancements (continued)

Recorded AMA modules for table TOPAMAOP

AMAOPT	Phase 2 EBAF AMA Record Module number
RECORD_800_SERVICE_INFORMATION	304 Enhanced 800 Service 309 Out of Band
RECORD_OPERATOR_KEYING_ACTIONS	310 Operator Keying Action
RECORD_LOCAL_CALL_INDICATOR	316 Local Determination
RECORD_CALL_ORIGINATION_TYPE	311 Origination Call Type
RECORD_OVERWRITTEN_NUM	314 Overwritten Number 315 Overwritten Number (EBCDIC)
RECORD_GUEST_NAME_AND_ROOM_NUM	312 Hotel Information
RECORD_OVERSEAS_CALLING_CARD	313 Overseas Calling Card Billing
RECORD_ORIGINATING_TRK_GRP_NUM	104 Trunk Identification

Note: For 1+DD, ANI-success, non-coin, non-hotel calls, LAMA/CAMA AMA records are produced. These AMA records do not support modules. Therefore, the originating trunk group number cannot be provided.

Comparison of TOPS EBAF AMA Phases

To help illustrate the differences in the TOPS EBAF phases, the following figures contain the AMA records for Phases 0-2, respectively, for a call receiving call completion service that was alternately billed to a calling card using the Automatic Calling Card Service (ACCS).

Example AMA record for Phase 0

```
HEX ID:AA  STRUCTURE CODE:00718C  CALL CODE:015C
SENSOR TYPE:036C  SENSOR ID:0000000C  REC OFFICE TYPE:036C
REC OFFICE ID:0000000C  DATE:91022C  TIMING IND:00000C
STUDY IND:0200000C  ANSWER:0C SERVICE OBSERVED:0C
OPER ACTION:0C  SERVICE FEATURE:000C  ORIG NPA:613C
ORIG NUMBER:2391111C  OVERSEAS IND:0C  TERM NPA:00212C
TERM NUMBER:2201111C CONNECT TIME:2200171C
ELAPSED TIME:000000075C  OPERATOR NUMBER:0003101C
BILLING NUMBER:02122210002C  DIALING RATE:1C
RAO NUMBER:234C  BILLING NUMBER CONTENT:5C
BILLING VALID FILE:1C  CREDIT CARD FAIL:000C
OPERATOR WORK TIME:000000000C
```

TOPS AMA Enhancements (continued)

Example AMA record for Phase 1

```
HEX ID:AA  STRUCTURE CODE:40700C  CALL CODE:015C
SENSOR TYPE:036C  SENSOR ID:0000000C  REC OFFICE TYPE:036C
REC OFFICE ID:0000000C  DATE:91022C  TIMING IND:00000C
STUDY IND:0200000C  ANSWER:0C   SERVICE OBSERVED:0C
OPER ACTION:0C  SERVICE FEATURE:000C  ORIG NPA:613C
ORIG NUMBER:2391111C  OVERSEAS IND:0C  TERM NPA:00212C
TERM NUMBER:2201111C  CONNECT TIME:2200497C
ELAPSED TIME:000000068C  OPERATOR NUMBER:0003101C
OPERATOR WORK TIME:000000000C  MODULE CODE:052C
BILLING TYPE ID:1C  FORMAT ID:2C  SIG DIGITS NEXT FIELD:010C
BILLABLE DIGITS 1:02122210002C  BILLABLE DIGITS 2:FFFFFFFFFF
RAO NUMBER:234C  CALLING CARD SUBACCOUNT NUMBER:012C
BILLING NUMBER TREATMENT:FF  LIDB RESPONSE:405C
OSS ACTION:1C  MEANS OF INPUT/RESPONSE:113C
SEQUENCE CALL COUNTER:001C  MODULE CODE:000C
```

Example AMA record for Phase 2

```
HEX ID:AA  STRUCTURE CODE:40752C  CALL CODE:192C
SENSOR TYPE:036C  SENSOR ID:0000000C  REC OFFICE TYPE:036C
REC OFFICE ID:0000000C  DATE:91022C  TIMING IND:00000C
STUDY IND:0200000C  SERVICE OBSERVED:0C
ORIG NPA:613C  ORIG NUMBER:2391111C  CONNECT TIME:2201213C
ELAPSED TIME:000000075C  OPERATOR IDS:0003101003101C
ACC OPERATOR WORK TIME:00000C  SERVICE FEATURE:000C
STATION SIGNALING IND:2C  SCREENING CODE:000C
CALLED NUMBER INPUT:1C  CALLING NUMBER SOURCE:1C
MODULE CODE:051C  OVERSEAS IND:0C  TERM NPA:00212C
TERM NUMBER:2201111C  COMPLETION IND:001C  RATE IND:1C
OSS CALL COMPLETION CONDITIONS:3111110C  MODULE CODE:052C
BILLING TYPE ID:1C  FORMAT ID:2C  SIG DIGITS NEXT FIELD:010C
BILLABLE DIGITS 1:02122210002C  BILLABLE DIGITS 2:FFFFFFFFFF
RAO NUMBER:234C  CALLING CARD SUBACCOUNT NUMBER:012C
BILLING NUMBER TREATMENT:FF  LIDB RESPONSE:405C
OSS ACTION:1C  MEANS OF INPUT/RESPONSE:113C
SEQUENCE CALL COUNTER:001C MODULE CODE:000C
```

The Phase 0 AMA record contains all call information in the base structure code; there are no modules appended to this AMA record. The Phase 1 AMA record contains service information in both the base structure code (the call completion information) and in a module (module 052, Alternate Billing, records the alternate billing information). The Phase 2 AMA record is broken into a base structure code with service-specific modules appended; module

051, Call Completion, records the call completion information, and module 052, Alternate Billing, records the alternate billing information.

As new services are added, the Phase 2 AMA record is most-easily modified and extended; the new service-specific information can be put into a module that is appended to the Phase 2 AMA record.

Station Message Detail Recording

TOPS AMA Enhancements does not affect Station Message Detail Recording.

Datafilling office parameters

TOPS AMA Enhancements does not affect office parameters.

Datafill sequence

TOPS AMA Enhancements does not affect the datafill sequence.

Datafilling table TOPAMAOP

The following values are added to the range of values of field AMAOPT in table TOPAMAOP:

Datafilling Table TOPAMAOP

Parameter name	Explanation and action
RECORD_800_SERVICE_INFORMATION	This parameter determines whether or not enhanced 800 service and out-of-band are included in the EBAF AMA records for operator-assisted (OA) calls that provide call completion service for enhanced 800 service numbers.
RECORD_OPERATOR_KEYING_ACTIONS	This parameter determines whether or not operator keying action is included in the EBAF AMA records for all OA calls
RECORD_LOCAL_CALL_INDICATOR	This parameter determines whether or not Local Determination is included in the EBAF AMA records for calls that provide call completion service to a local number.
RECORD_CALL_ORIGINATION_TYPE	This parameter determines whether origination call type is included in the EBAF AMA records for all calls.

TOPS AMA Enhancements (end)

Datafilling Table TOPAMAOP

Parameter name	Explanation and action
RECORD_OVERWRITTEN_NUM	This parameter determines whether the overwritten number is included in the EBAF AMA records for OA calls where the forward or special billing number is overwritten with a new number.
RECORD_GUEST_NAME_AND_ROOM_NUM	This parameter determines whether hotel information is included in EBAF AMA records for all hotel calls.
RECORD_OVERSEAS_CALLING_CARD	This parameter determines whether Overseas calling card billing is included in the EBAF AMA records for all calls alternately billed to an overseas format calling card.
RECORD_ORIGINATING_TRK_GRP_NUM	This parameter determines whether the Fixed trunk group number is included in the EBAF AMA records for all calls.

Datafill example of modified table TOPAMAOP

The following example shows sample datafill for modified table TOPAMAOP.

MAP display example of modified table TOPAMAOP

```
AMAOPT                                  OPTINFO
-----------------------------------------------
EBAF_PHASE                              PHASE2
EA_SERV_PROCESSING_TIME                      Y
RECORD_REQUESTED_NUMBER_FOR_DA               Y
RECORD_800_SERVICE_INFORMATION               Y
RECORD_OPERATOR_KEYING_ACTIONS               Y
RECORD_LOCAL_CALL_INDICATOR                  Y
RECORD_CALL_ORIGINATION_TYPE                 Y
RECORD_OVERWRITTEN_NUM                       Y
RECORD_GUEST_NAME_AND_ROOM_NUM               Y
RECORD_OVERSEAS_CALLING_CARD                 Y
RECORD_ORIGINATING_TRK_GRP_NUM               Y
```

Translation verification tools

TOPS AMA Enhancements does not use translation verification tools.

SERVORD

TOPS AMA Enhancements does not use SERVORD.

TOPS AMA Modifications-U.S. only

Ordering codes

Functional group ordering code: OSB00101

Functionality ordering code: not applicable

Release applicability

TOPS05 and up

TOPS AMA Modifications-U.S. only was introduced in TOPS05.

Prerequisites

To operate, TOPS AMA Modifications-U.S. only requires the following:

- Functionality BAS Generic, BAS00003
- Table TOPSFTR paramter TOPS_ON_OFF_SWITCH = Y

Description

The functionality is provided by the following feature:

Feature number	Feature name
AN1645	TOPS AMA Enhancements

Functionality synopsis

This functionality covers the following three areas of Traffic Operator Position System (TOPS) Automatic Message Accounting (AMA) Enhancements:

- Append inter-local access and transport area (LATA) carrier/international carrier (IC/INC) call delivery module code 053 to call code 195 AMA records for directory assistance (DA) calls originating on access tandem to carrier (ATC) trunks.
- AMA records (call code 194 or 195) may be created for DA calls that originate on TOPS or ATC trunks but are abandoned while waiting in queue for an operator. The creation of these AMA records is determined by the AMA option RECORD_AMA_FOR_ABANDONED_DA_CALL in table TOPAMAOP that was introduced by this functionality in NA005.
- Support for Expanded Bellcore AMA Format (EBAF) Phase 0 and Phase 1 is discontinued. Phase 0 and Phase 1 datafill is changed to Phase 2 during the One Night Process (ONP) software upgrade.

TOPS AMA Modifications-U.S. only (continued)

Operation

Append module code 053 to call code 195 for ATC traffic

Background

For DA calls coming into a TOPS switch over ATC trunks, it is often desirable for the provider to be able to bill the carrier for access time. Typically, DA calls that terminate on a TOPS switch generate an AMA record with call code 195. Previously, a call code 195 AMA record did not contain the following information:

- carrier code
- carrier connect time
- trunk group (incoming or two-way)

Module code 053 was originally defined for calls that are delivered to the IC/INC from the TOPS switch. It contains the necessary data elements to determine carrier code identification, carrier connect time and the trunk group.

Description

Module code 053 is appended to call code 195 AMA records. These records are produced for DA calls coming into the TOPS switch on ATC trunks. The addition of module code 053 allows operating companies to bill based upon the carrier connect time.

Create AMA record for abandoned DA calls in queue

Background

DA calls incoming on TOPS trunks produced a 194 AMA record and DA calls incoming on ATC trunks produced a 195 AMA record. If either of these type calls were abandoned while in queue awaiting an available operator, no AMA record was produced.

Description

Now, AMA records can be created for DA calls that are abandoned while waiting in queue for an operator; call code 194 AMA records can be created for DA calls originating on a TOPS trunk and call code 195 AMA records can be created for DA calls that originate on an ATC trunk. The AMA option RECORD_AMA_FOR_ABANDONED_DA_CALL in table TOPAMAOP controls the creation of these records. Records are produced if the option is

datafilled as Y. If datafilled as N, no records are produced. Refer to the following table:

Field descriptions for table TOPAMAOP

Field AMAOPT	Field OPTINFO	Explanation and action
RECORD_AMA_ FOR_ ABANDONED_ DA_CALL	Y/N	This option was introduced in NA005. If it is set to Y, call code 194 AMA records and call code 195 records are created for DA calls that are abandoned while in queue waiting for an operator. Call code 194 records are created when the DA call originates from a TOPS trunk; call code 195 records are created when the DA call originates from an ATC trunk. N is the default value. When the default value is set, no records are created.

The following field values in the call code 194 and 195 AMA records identify an abandoned DA call that is not serviced by an automated system:

- CONNECT TIME-default value of zero (0000000C)
- ELAPSED TIME-default value of zero (000000000C)
- OPERATOR IDENTIFICATIONS (IDS)-default values (0009999009999C)
- ACCUMULATED (ACC) OPERATOR WORK TIME-default value of zero (00000C)

The CONNECT TIME and ELAPSED TIME fields have actual values for DA calls serviced by an automated system such as the Automated Directory Assistance Service (ADAS) or ADASPLUS. The OPERATOR IDS and ACC OPERATOR WORK TIME fields have the same default values as those for DA calls that are not serviced by an automated system.

Note: The CONNECT TIME, ELAPSED TIME, OPERATOR IDS and ACC OPERATOR WORK TIME default field values are the key to identifying abandoned DA calls.

Prevent datafill of Expanded Bellcore AMA Format Phase 0 and Phase 1

Background

A phased approach is used to incorporate EBAF into the Northern Telecom (Nortel) TOPS product. This approach is similar to the plan that Bellcore is

TOPS AMA Modifications-U.S. only (continued)

using to introduce EBAF into the market. It consists of the following three phases:

- *Phase 0:* This phase uses the structure codes and call codes as they existed prior to EBAF. Modules are not used. Call codes represent the billing class of a call.
- *Phase 1:* The modular concept for recording additional call information in the AMA records is introduced. The number of structure codes that are used is reduced. The call codes that are used include the call codes used in Phase 0 and call codes 110 and 134. In this phase, 1+ non-operator handled Centralized Automatic Message Accounting (CAMA) calls produce an AMA record with structure code 00001, 00101, 00625 or 00627 instead of the 007XX structure codes used in Phase 0. These structure codes (00001, 00101, 00625 and 00627) do not have modules appended to them. As in Phase 0, the call codes that are used also reflect the billing class of a call.
- *Phase 2:* This phase completes the transition to the modular concept with the exception of 1+ non-operator handled CAMA calls. The 1+ non-operator handled CAMA calls use the same structure codes as those in Phase 1, without modules appended. Two additional structure codes are supported, 00751 and 00752. Structure code 00751 is used for all calls originating from an intertoll or ATC trunk group. Structure code 00752 is used for all calls originating from a remote operator number identification (RONI) or TOPS trunk group. The call codes used in this phase, unlike the call codes used in Phases 0 and 1, reflect the service received on a call.

This phased approach for incorporating EBAF into the Nortel TOPS product, has been available since BCS28. There have been minor modifications to Phase 1. Any new modules defined by Bellcore have been included only in Phase 2.

As an example, Feature Group D Carrier Identification Code Expansion, which requires a four-digit specification of the carrier code in AMA records, could only be included in Phase 2. Since Feature Group D Carrier Identification Code Expansion is a regulatory requirement, all operating companies were forced to Phase 2. Therefore, Phase 0 and Phase 1 are no longer needed.

Description

The datafill of EBAF PHASE0 and PHASE1 is not permitted in the Option information (OPTINFO) field for the AMA option EBAF_PHASE in table TOPAMAOP. Neither is datafill of these values permitted in the PHASE field

TOPS AMA Modifications-U.S. only (continued)

in table EBAFTKPH. If PHASE0 and PHASE1 already exists, they are changed to PHASE2 during an ONP. Refer to the following tables:

Field descriptions for table TOPAMAOP

Field AMAOPT	Field OPTINFO	Explanation and action
EBAF_ PHASE	PHASE0, PHASE1, PHASE2	This option has changed. PHASE0, PHASE1 and PHASE2 appear as valid field values; only PHASE2 can be datafilled. PHASE0 and PHASE1 datafill are changed to PHASE2 during an ONP software upgade.

Field descriptions for table EBAFTKPH

Field	Subfield or refinement	Entry	Explanation and action
CLLI		alphanumeric (up to 16 characters)	*Common language location identifier* Enter the common language location identifier (CLLI) name of the originating trunk group, as specified in table CLLI. The trunk group type must be TOPS, intertoll, ATC or RONI and the trunk group must be either incoming or two-way.
PHASE		PHASE0, PHASE1, PHASE2	*Phase.* This field is an existing field. PHASE0, PHASE1 and PHASE2 appear as valid field values; only PHASE2 can be datafilled. PHASE0 and PHASE1 are changed to PHASE2 during an ONP software upgade.

Translations table flow

TOPS AMA Modifications-U.S. only does not affect translations table flow.

TOPS AMA Modifications-U.S. only (continued)

Limitations and restrictions

The following limitations and restrictions apply to TOPS AMA Modifications-U.S. only:

- Module code 053 fields IC/INC call event status, Source of IC/INC code and Method of signaling are not applicable.
- Module code 053 is not appended to call code 195 AMA records for DA calls arriving on multifrequency (MF) intertoll or integrated services digital network user part (ISUP) intertoll trunks.
- Abandoned DA calls must originate on TOPS trunks for call code 194 AMA records and on ATC trunks for call code 195 AMA records to be created.
- The datafill of EBAF PHASE0 and PHASE1 is not permitted in the OPTINFO field for the AMA option EBAF_PHASE in table TOPAMAOP. Neither is datafill of these values permitted in the PHASE field in table EBAFTKPH.

Interactions

TOPS AMA Modifications-U.S. only has no functionality interactions.

Activation/deactivation by the end user

TOPS AMA Modifications-U.S. only requires no activation or deactivation by the end user.

Billing

Overview

Module code 053 is appended to call code 195 AMA records for DA calls originating on ATC trunks.

AMA records (call code 194 or 195) can now be created for DA calls that originate on TOPS or ATC trunks that are abandoned while waiting in queue for an operator. The creation of these AMA records is determined by the AMA option RECORD_AMA_FOR_ABANDONED_DA_CALL in table TOPAMAOP.

The following four field values in the call code 194 and 195 AMA records identify an abandoned DA call that is not serviced by an automated system:

- CONNECT TIME-default value of zero (0000000C)
- ELAPSED TIME-default value of zero (000000000C)
- OPERATOR IDS-default values (0009999009999C)
- ACC OPERATOR WORK TIME-default value of zero (00000C)

The CONNECT TIME and ELAPSED TIME fields have actual values for DA calls serviced by an automated system such as ADAS or ADASPLUS. The OPERATOR IDS and ACC OPERATOR WORK TIME fields have default values as shown above for DA automated serviced calls.

Module code 053-IC/INC Call Delivery Service

The following table provides information for module code 053. This module already exists and is now appended to call code 195 AMA records for DA calls that originate on ATC trunks.

Module code 053-IC/INC Call Delivery Service

Information	Field number	Number of characters
Module code	88	4
IC/INC carrier prefix	57	6
Carrier connect date	6	6
Carrier connect time	18	8
Carrier elapsed time	19	10
IC/INC call event status	58	4
Trunk group number	83	6
Source of IC/INC code	292	2
IC/INC agreement table	294	2
Method of signaling	295	4

Note 1: IC/INC call event status is not applicable because the DA call is terminating instead of originating on the ATC trunk. This field indicates the last event, up to and including answer supervision, that preceeded disconnect. The field has a default value of 000C, indicating first wink not received.

Note 2: Source of IC/INC code is not applicable because the DA call is terminating instead of originating on the ATC trunk. This field specifies how the IC/INC code is determined on exchange access calls. The field has a default value of 2C, indicating presubscribed to line.

Note 3: Method of signaling is not applicable because the DA call is terminating instead of originating on the ATC trunk. This field indicates the

TOPS AMA Modifications-U.S. only (continued)

method by which call information is passed to the IC/INC. The field has a default value of FFFF, indicating unknown signaling.

Call codes 194 and 195

Call codes 194 and 195 are existing AMA records which are created for DA calls originating on TOPS and ATC trunks, respectively. DA calls incoming on TOPS trunks produce a 194 AMA record and DA calls incoming on ATC trunks produce a 195 AMA record. With this functionality, these records can be created for DA calls that originate from a TOPS or ATC trunk, but are abandoned while waiting in queue for an operator.

The CONNECT TIME and ELAPSED TIME fields have a value of 0 for abandoned DA calls not serviced by an automated system. These values are as shown:

- CONNECT TIME (0000000C)
- ELAPSED TIME (000000000C)

The CONNECT TIME and ELAPSED TIME fields have actual values for abandoned DA calls serviced by an automated system. An example of these values are as shown:

- CONNECT TIME (1504203C)
- ELAPSED TIME (000000084C)

TOPS AMA Modifications-U.S. only (continued)

The OPERATOR IDS and ACC OPERATOR WORK TIME fields have default values for abandoned DA calls that are serviced by automated systems and those not serviced by automated systems. These values are as shown:

- Field 296-Operator Identifications has default values (0009999009999C)

  The following table provides information for data field 296:

Data field 296-Operator Identifications

Character	Value	Meaning
1		Operator indicator:
	0	Operator not identified
2-3	00	Operator services office (First Operator Team)
4-7	9999	Operator number (First Operator Number)
8-9	00	Operator services office (Last Operator Team)
10-13	9999	Operator number (Last Operator Number)
14	C	SIGN character (HEX C)

- Field 403-Chargeable Operator Holding Time, Accumulated Operator Work Time, or Small Interval Elapsed Time. The field contains the values for ACC OPERATOR WORK TIME. The default values are (00000C).

  The following table provides information for data field 403:

Data field 403-Chargeable Operator Holding Time, Accumulated Operator Work Time or Small Interval Elapsed Time

Character	Value	Meaning
1-2	00	Minutes
3-4	00	Seconds
5	0	Tenths of a second
6	C	SIGN character (HEX C)

Note: For additional information about fields, reference the *Bellcore Format Automatic Message Accounting Reference Guide*.

The AMA option RECORD_AMA_FOR_ABANDONED_DA_CALL in table TOPAMAOP controls the creation of AMA records 194 and 195.

TOPS AMA Modifications-U.S. only (continued)

Records are produced if the option is datafilled as Y. If it is datafilled as N, records are not produced.

Example of records for abandoned non-automated DA calls

The following display shows an example of a North American AMA record for call code 194. The CONNECT TIME, ELAPSED TIME, OPERATOR IDS and ACC OPERATOR WORK TIME fields are set to default values, indicating that the DA call is abandoned and is not serviced by an automated system.

Note: These calls originate from a TOPS trunk.

Call code 194-North American AMA record, origination from a TOPS trunk

```
HEX ID:AA  STRUCTURE CODE:40752C  CALL CODE:194C  SENSOR TYPE:036C
SENSOR ID:0123456C  REC OFFICE TYPE:036C  REC OFFICE ID:0123456C
DATE:50418C  TIMING IND:00000C  STUDY IND:0200000C  SERVICE OBSERVED:0C
ORIG NPA:619C  ORIG NUMBER:3208888C  CONNECT TIME:0000000C
ELAPSED TIME:000000000C  OPERATOR IDS:0009999009999C
ACC OPERATOR WORK TIME:00000  SERVICE FEATURE:000C
STATION SIGNALING IND:2C  SCREENING CODE:000C  CALLED NUMBER INPUT:1C
CALLING NUMBER SOURCE:1C  MODULE CODE:311C  ORIG CALL TYPE:015C
MODULE CODE:055C  SERVICE ID:001C  MEANS OF INFORMATION INPUT:1C
MEANS OF LSDB ACCESS:1C  LSDBS BOC ID:11234C  LSDB ACCESSES:FF
LISTING RESPONSE:9C  LISTING STATUS:999999900C  REQUEST COUNTER:001C
MODULE CODE:104C  TRUNK FACILITY ID:103010001C  MODULE CODE:000C
```

The following display shows an example of an Open Numbering AMA record for call code 194. The CONNECT TIME, ELAPSED TIME, OPERATOR IDS and ACC OPERATOR WORK TIME fields are set to default values, indicating that the DA call is abandoned and is not serviced by an automated system.

Note: These calls originate from a TOPS trunk.

TOPS AMA Modifications-U.S. only (continued)

Call code 194-Open Numbering AMA record, origination from a TOPS trunk

```
HEX ID:AA STRUCTURE CODE:40106C CALL CODE:194C SENSOR TYPE:036C
SENSOR ID:0123456C REC OFFICE TYPE:036C REC OFFICE ID:0123456C
DATE:50722C TIMING IND:00000C STUDY IND:0200002C SERVICE OBSERVED:0C
SIG DIGITS NEXT FIELD:005C ORIG OPEN DIGITS 1:00000044555C
ORIG OPEN DIGITS 2:FFFFFFFFFF ORIGINATING CHARGE INFO:FFFF
CONNECT TIME:0000000C ELAPSED TIME:000000000C SERVICE FEATURE:000C
STATION SIGNALING IND:9C SCREENING CODE:000C CALLED NUMBER INPUT:1C
CALLING NUMBER SOURCE:1C MODULE CODE:311C ORIG CALL TYPE:036C
MODULE CODE:032C OPERATOR IDS:0009999009999C
ACC OPERATOR WORK TIME:00000C MODULE CODE:055C SERVICE ID:001C
MEANS OF INFORMATION INPUT:1C MEANS OF LSDB ACCESS:1C LSDBS BOCID:11234C
LSDB ACCESSES:FF  LISTING RESPONSE:9C  LISTING STATUS:999999900C
REQUEST COUNTER:001C  MODULE CODE:104C  TRUNK FACILITY ID:101150001C
MODULE CODE:000C
```

The following display shows an example of a North American/Open Numbering AMA record for call code 195. The CONNECT TIME, ELAPSED TIME, OPERATOR IDS and ACC OPERATOR WORK TIME fields are set to default values, indicating that the DA call is abandoned and is not serviced by an automated system. Module code 053 is appended.

Note: These calls originate from an ATC trunk.

Call code 195-North American /Open Numbering AMA record, origination from an ATC trunk

```
HEX ID:AA STRUCTURE CODE:40751C CALL CODE:195C SENSOR TYPE:036C
SENSOR ID:0123456C REC OFFICE TYPE:036C REC OFFICE ID:0123456C
DATE:50418C TIMING IND:00000C STUDY IND:0200042C SERVICE OBSERVED:0C
CONNECT TIME:0000000C ELAPSED TIME:000000000C OPERATOR
IDS:0009999009999C
ACC OPERATOR WORK TIME:00000C SOURCE OF REQUEST:20888C
CALLED NUMBER INPUT:1C  MODULE CODE:053C  IC/INC PREFIX:08882C
CC DATE:50418C  CC TIME:0958261C  ELAPSED CC:000000143C
IC/INC EVENT STATUS:000C  TRUNK GROUP NUMBER:10323C
SOURCE OF IC/INC CODE:2C  IC/INC AGREEMENT TABLE:1C
METHOD OF SIGNALING:FFFF  MODULE CODE:311C  ORIG CALL TYPE:015C
MODULE CODE:055C  SERVICE ID:001C  MEANS OF INFORMATION INPUT:1C
MEANS OF LSDB ACCESS:1C  LSDBS BOC ID:11234C  LSDB ACCESSES:FF
LISTING RESPONSE:9C  LISTING STATUS:999999900C  REQUEST COUNTER:001C
MODULE CODE:104C  TRUNK FACILITY ID:103230001C  MODULE CODE:000C
```

TOPS AMA Modifications-U.S. only (continued)

Example of records for abandoned automated DA calls

The following display shows an example of a North American AMA record for call code 194. The CONNECT TIME and the ELAPSED TIME fields have actual values; the OPERATOR IDS and ACC OPERATOR WORK TIME fields are set to default values. Together, these settings for these fields indicate that the DA call is abandoned and is serviced by an automated system.

Note: These calls originate from a TOPS trunk.

Call code 194-North American AMA record, origination from a TOPS trunk

```
HEX ID:AA  STRUCTURE CODE:40752C  CALL CODE:194C  SENSOR TYPE:036C
SENSOR ID:0123456C  REC OFFICE TYPE:036C  REC OFFICE ID:0123456C
DATE:50502C  TIMING IND:00000C  STUDY IND:0200000C  SERVICE OBSERVED:0C
ORIG NPA:619C  ORIG NUMBER:3208888C  CONNECT TIME:1317342C
ELAPSED TIME:000000093C  OPERATOR IDS:0009999009999C
ACC OPERATOR WORK TIME:00000C  SERVICE FEATURE:000C
STATION SIGNALING IND:2C  SCREENING CODE:000C  CALLED NUMBER INPUT:1C
CALLING NUMBER SOURCE:1C  MODULE CODE:311C  ORIG CALL TYPE:015C
MODULE CODE:055C  SERVICE ID:001C  MEANS OF INFORMATION INPUT:3C
MEANS OF LSDB ACCESS:1C  LSDBS BOC ID:11234C  LSDB ACCESSES:FF
LISTING RESPONSE:9C  LISTING STATUS:999999900C  REQUEST COUNTER:001C
MODULE CODE:104C  TRUNK FACILITY ID:103000001C  MODULE CODE:000C
```

The following display shows an example of an Open Numbering AMA record for call code 194. The CONNECT TIME and ELAPSED TIME fields have actual values; the OPERATOR IDS and ACC OPERATOR WORK TIME fields are set to default values. Together, these settings for these fields indicate that the DA call is abandoned and is serviced by an automated system.

Note: These calls originate from a TOPS trunk.

TOPS AMA Modifications-U.S. only (continued)

Call code 194-Open Numbering AMA record, origination from a TOPS trunk

```
HEX ID:AA  STRUCTURE CODE:40106C  CALL CODE:194C  SENSOR TYPE:036C
SENSOR ID:0123456C  REC OFFICE TYPE:036C  REC OFFICE ID:0123456C
DATE:50731C  TIMING IND:00000C  STUDY IND:0200012C  SERVICE OBSERVED:0C
SIG DIGITS NEXT FIELD:000C  ORIG OPEN DIGITS 1:00000000000C
ORIG OPEN DIGITS 2:FFFFFFFFFF ORIGINATING CHARGE INFO:FFFF
CONNECT TIME:1728579C ELAPSED TIME:000000100C SERVICE FEATURE:000C
STATION SIGNALING IND:9C SCREENING CODE:000C CALLED NUMBER INPUT:1C
CALLING NUMBER SOURCE:FF MODULE CODE:311C ORIG CALL TYPE:036C
MODULE CODE:032C OPERATOR IDS:0009999009999C
ACC OPERATOR WORK TIME:00000C MODULE CODE:055C SERVICE ID:001C
MEANS OF INFORMATION INPUT:3C MEANS OF LSDB ACCESS:1C LSDBS BOC
ID:11234C
LSDB ACCESSES:FF LISTING RESPONSE:9C LISTING STATUS:999999900C
REQUEST COUNTER:001C MODULE CODE:104C TRUNK FACILITY ID:101150001C
MODULE CODE:000C
```

The following display shows an example of a North American/Open Numbering AMA record for call code 195. The CONNECT TIME and ELAPSED TIME fields have actual values; the OPERATOR IDS and ACC OPERATOR WORK TIME fields are set to default values. Together these fields indicate that the DA call is abandoned and is serviced by an automated system. Module code 053 is appended.

Note: These calls originate from an ATC trunk.

Call code 195-North American /Open Numbering AMA record, origination from an ATC trunk

```
HEX ID:AA STRUCTURE CODE:40751C CALL CODE:195C SENSOR TYPE:036C
SENSOR ID:0123456C REC OFFICE TYPE:036C REC OFFICE ID:0123456C
DATE:50503C  TIMING IND:00000C STUDY IND:0200042C SERVICE OBSERVED:0C
CONNECT TIME:1504203C ELAPSED TIME:000000084C OPERATOR IDS:0009999009999C
ACC OPERATOR WORK TIME:00000C  SOURCE OF REQUEST:20888C
CALLED NUMBER INPUT:1C MODULE CODE:311C ORIG CALL TYPE:015C
MODULE CODE:053C IC/INC PREFIX:08882C CC DATE:50503C CC TIME:1504203C
ELAPSED CC:000000263C IC/INC EVENT STATUS:000C TRUNK GROUP NUMBER:10322C
SOURCE OF IC/INC CODE:2C IC/INC AGREEMENT TABLE:1C
METHOD OF SIGNALING:FFFF MODULE CODE:055C SERVICE ID:001C
MEANS OF INFORMATION INPUT:3C MEANS OF LSDB ACCESS:1C LSDBS BOC ID:11234C
LSDB ACCESSES:FF LISTING RESPONSE:9C LISTING STATUS:999999900C
REQUEST COUNTER:001C MODULE CODE:104C TRUNK FACILITY ID:103220001C
MODULE CODE:000C
```

TOPS AMA Modifications-U.S. only (continued)

Station Message Detail Recording

TOPS AMA Modifications-U.S. only does not affect Station Message Detail Recording.

Datafilling office parameters

TOPS AMA Modifications-U.S. only does not affect office parameters.

Datafill sequence

TOPS AMA Modifications-U.S. only does not affect the datafill sequence.

Datafilling table TOPAMAOP

The following table shows the datafill specific to TOPS AMA Modifications-U.S. only for table TOPAMAOP. Only those fields that apply directly to TOPS AMA Modifications-U.S. only are shown. For a description of the other fields, refer to the data schema section of this document.

Datafilling table TOPAMAOP

Parameter name	Explanation and action
RECORD_AMA_FOR_ ABANDONED_DA_ CALL	This option was introduced in NA005. If it is set to Y, call code 194 AMA records and call code 195 records are created for DA calls that are abandoned while in queue waiting for an operator. Call code 194 records are created when the DA call originates from a TOPS trunk; call code 195 records are created when the DA call originates from an ATC trunk. N is the default value. When the default value is set, no records are created.
EBAF_PHASE	The OPTINFO field has changed for EBAF_PHASE. PHASE0, PHASE1 and PHASE2 appear as valid field values; only PHASE2 can be datafilled. PHASE0 and PHASE1 are changed to PHASE2 during an ONP software upgrade.

Datafill example for table TOPAMAOP

The following example shows sample datafill for table TOPAMAOP:

MAP display example for table TOPAMAOP

```
AMAOPT                                                  OPTINFO
-------------------------------------------------------------
RECORD_AMA_FOR_ABANDONED_DA_CALL                          Y
EBAF_PHASE                                                PHASE2
```

Error messages for table TOPAMAOP

The following error messages apply to table TOPAMAOP:

Error messages for table TOPAMAOP

Error message	Explanation and action
"PHASE 0 AND PHASE 1 ARE NOT ALLOWED"	This message is displayed when PHASE0 or PHASE1 datafill is attempted.

Datafilling table EBAFTKPH

The following table shows the datafill specific to TOPS AMA Modifications-U.S. only for table EBAFTKPH. Only those fields that apply directly to TOPS AMA Modifications-U.S. only are shown. For a description of the other fields, refer to the data schema section of this document.

Datafilling table EBAFTKPH

Field	Subfield or refinement	Entry	Explanation and action
PHASE		PHASE0, PHASE1, PHASE2	*Phase.* The PHASE field has changed in this table. PHASE0, PHASE1 and PHASE2 appear as valid field values; only PHASE2 can be datafilled. PHASE0 and PHASE1 are changed to PHASE2 during an ONP software upgrade.

Datafill example for table EBAFTKPH

The following example shows sample datafill for table EBAFTKPH:

MAP display example for table EBAFTKPH

```
CLLI                                                    PHASE
-------------------------------------------------------------
TBELLIC1                                                PHASE2
```

TOPS AMA Modifications-U.S. only (end)

Error messages for table EBAFTKPH

The following error messages apply to table EBAFTKPH:

Error messages for table EBAFTKPH

Error message	Explanation and action
"PHASE 0 AND PHASE 1 ARE NOT ALLOWED"	This message is displayed when PHASE0 or PHASE1 datafill is attempted.

Translation verification tools

TOPS AMA Modifications-U.S. only does not use translation verification tools.

SERVORD

TOPS AMA Modifications-U.S. only does not use SERVORD.

TOPS and Succession Interworking

Ordering codes

Functional group ordering code: OSB00101

Functionality ordering code: not applicable

Release applicability

TOPS15 and up

TOPS15 introduced TOPS and Succession Interworking.

Requirements

To operate, TOPS and Succession Interworking requires the following:

- Functionality BAS Generic, BAS00003
- Table TOPSFTR paramter TOPS_ON_OFF_SWITCH = Y

Description

The TOPS software optionality codes (SOC) are changed to better reflect operator services in new architectures. Also, new table TOPSFTR (TOPS features) is created to enable TOPS features. Therefore, the SOC and related tuples in TOPSFTR must be enabled for operation of features.

This functionality is provided by the following feature:

Feature number	Feature name
59017625	TOPS SOC Option Consolidation

TOPS and Succession Interworking (continued)

Operation

The SOC changes and table TOPSFTR tuples are as follows:

SOC changes

Pre-TOPS15 functionalities	TOPS15 functionalities and table TOPSFTR parameters
OSB00001 (Operator services basic)	OSB00101 The SOC is changed to OSB00101. The related table TOPSFTR tuples are: • COUNTRY_DIRECT for Auto Country Direct • ESTIMATE_OF_CHARGES for Estimated Call Charges • MESSAGE_DELIVERY_SERVICE for AudioGram Delivery Services-Offer of Service Prompt • MUSIC_AND_AN_IN_QUEUE for Music and Announcement in Queue • PRE_PAID_COIN for Pre-paid Coin • QMS_CASE for QMS Customer Service Enhancement • QMS_BILLING_SATISFIED for QMS Billing Indicator • TOPS_ON_OFF_SWITCH to enable OSB00101
ABS00001 - ABS00014 (Alternate billing service)	ABS00101 The 14 options are collapsed into one option. The related table TOPSFTR tuples are: • AUTHORIZATION_CODE_BILLING for TOPS Authorization Code Billing • AUTOMATED_ROOM_AND_AUTH_NUM_COLLECTION for Automated Room and Authorization Number • CALLING_CARD_DENIAL_REASON for Calling Card Denial Reasons • COMMERCIAL_CREDIT_CARD_SUPPORT for TOPS Commercial Credit Card • DISALLOWED_CARD_ISSUER for Disallowed Card Issuer Blocking • ORIGINATING_LINE_NUMBER_SCREENING for TOPS OLNS Interface

TOPS and Succession Interworking (continued)

SOC changes

Pre-TOPS15 functionalities	TOPS15 functionalities and table TOPSFTR parameters
ADVQ0001, ADVQ0002, ADVQ0005-ADVQ0009 (Advanced queueing)	OSB00101 The group is moved to OSB00101.
ENSV0001-ENSV0011, ENSV0013, ENSV0018, ENSV0021-ENSV0023, ENSV0025, ENSV0026 (Enhanced services)	ENSV0101-ENSV0107 The 18 options are collapsed into 7 options as follows: • ENSV0101 - ENSV base • ENSV0102 - ACTS • ENSV0103 - External rater interface and Seconds-based ACTS announcements • ENSV0104 - OLNS foreign language • ENSV0105 - OLNS support for no automation • TOPS0106 - IN interworking • TOPS0107 - TOPS IP operator centralization Also, the following functionalities are moved to OSB00101: • AudioGram Delivery Services- Offer of Service Prompt • Auto Country Direct • Carrier Selection • Enhance TOPS OC and Incresed Remote Support (ETMS OC) • Estimated Call Charges • External Audio Response Host and Remote • Pre-paid Coin • Screened Service Routing • TOPS Alternate Announcement • Two Digit ANI - TOPS Office

TOPS and Succession Interworking (continued)

SOC changes

Pre-TOPS15 functionalities	TOPS15 functionalities and table TOPSFTR parameters
	(ENSV continued) The related table TOPSFTR tuples are: • EXTERNAL_RATING for External RTRS Interface (ENSV0103) • SECONDS_BASED_ANNOUNCEMENTS for Seconds Based Announcements (ENSV0103) • OLNS_FOREIGN_LANGUAGE for OLNS Foreign Language (ENSV0104) • OLNS_NO_AUTOMATION for OLNS Support of No Automation (ENSV0105) • IN_OPERATOR_BACKUP for IN Operator Backup (ENSV0106) • OPERATOR_CENTRALIZATION_IP for TOPS IP Operator Centralization (ENSV0107)
EWSS0001-EWSS0007 (Enhanced workstation services)	OSB00101 The group is moved to OSB00101.
GOS00001, GOS00004-GOS00006 (Global operator services)	GOS00101-GOS00103 The 4 options are collapsed into 3 options as follows: • GOS00101 - GOS base • GOS00102 - GOS GOSS7 Signaling — GOSS7 ANSI signaling — GOSS7 ETSI signaling • GOS00103 - Competitive access The related table TOPSFTR tuples are: • GOSS7_ANSI for GOSS7 ANSI Signaling • GOSS7_ETSI for GOSS7 ETSI Signaling • GLOBAL_COMPETITIVE_ACCESS for Global Competitive Access and Global Competitive Access II

TOPS and Succession Interworking (continued)

SOC changes

Pre-TOPS15 functionalities	TOPS15 functionalities and table TOPSFTR parameters
OSAN0001-OSAN0007, OSAN0100 (Operator services advanced intelligent network)	OSAN0101-OSAN0103 The 8 options are collapsed into 3 options as follows: • OSAN0101 - OSSAIN base — OSSAIN Initial release — OSSAIN 07 Enhancements — OSSAIN 09 Enhancements • OSAN0102 - OSSAIN Enhancements — OSSAIN 10 Enhancements — OSSAIN 11 Enhancements — OSSAIN 12 Enhancements • OSAN0103 - OSSAIN Session Pricing The related table TOPSFTR tuples are: • OSSAIN_INITIAL_RELEASE for OSSAIN Initial Release (OSAN0101) • OSSAIN_RELEASE_07 for OSSAIN 07 Enhancemetns (OSAN0101) • OSSAIN_RELEASE_09 for OSSAIN 09 Enhancemetns (OSAN0101) • OSSAIN_RELEASE_10 for OSSAIN 10 Enhancemetns (OSAN0102) • OSSAIN_RELEASE_11 for OSSAIN 11 Enhancemetns (OSAN0102) • OSSAIN_RELEASE_12 for OSSAIN 12 Enhancemetns (OSAN0102)

TOPS and Succession Interworking (continued)

SOC changes

Pre-TOPS15 functionalities	TOPS15 functionalities and table TOPSFTR parameters
OSDA0001-OSDA0006, OSDA0008 (Operator services directory assistance)	OSDA0101-OSDA0103 The 7 options are collapsed into 3 options as follows: • OSDA0101 - OSDA base — ADAS — ADAS plus — LPP/APU support • OSDA0102 - DA call completion — Automatic DA call completion with alternate billing — Automated intercept call completion — Cellular ADACC • OSDA0103 - DA over IP The related table TOPSFTR tuple is: • CELLULAR_AUTOMATIC_DA_CALL_COMPLETION or Cellular/IEC/LEC ADACC (OSDA0102)

TOPS and Succession Interworking (continued)

SOC changes

Pre-TOPS15 functionalities	TOPS15 functionalities and table TOPSFTR parameters
OSEA0001-OSEA0013 (Operator services equal access)	OSEA0101-OSEA0103 The 13 options are collapsed into 3 options as follows: • OSEA0101 - OSEA base — TOPS InterLATA Carrier Services (TICS) — EAOSS signaling — EAFGD/CONFGD signaling — IntraLATA PIC from OLNS — Canadian EA — Flex ANI • TOPS ISUP signaling — GR317/GR394 ISUP to/from TOPS — OSNC signaling — TOPS/DMS250 release link trunking I — TOPS/DMS250 release link trunking II • LNP — LNP — Bellcore LNP

TOPS and Succession Interworking (continued)

SOC changes

Pre-TOPS15 functionalities	TOPS15 functionalities and table TOPSFTR parameters
	(OSEA continued) The related table TOPSFTR tuples are: • INTRA_LATA_PIC_VIA_OLNS for OLNS INtraLATA Presubscription (OSEA0101) • CANADIAN_EQUAL_ACCESS for TOPS Canadian Equal Access (OSEA0101) • FLEX_ANI for TOPS Flex ANI (OSEA0101) • ISUP_FOR_TOPS for GR317/GR394 ISUP to/from TOPS (OSEA0102) • OSS7_OSNC for Operator Services Network Capability (OSEA0102) and OSNC Enhancements (OSEA0102) • RLT_FOR_ISUP for TOPS Carrier RLT (OSEA0102) • RLT2_FOR_ISUP for TOPS Carrier RLT2 (OSEA0102) • NUMBER_PORTABILITY for TOPS LNP (OSEA0103) • BELLCORE_NUMBER_PORTABILITY for TOPS BELLCORE LNP (OSEA0103)

TOPS and Succession Interworking (continued)

SOC changes

Pre-TOPS15 functionalities	TOPS15 functionalities and table TOPSFTR parameters
UNBN0001-UNBN0007 (Unbundling)	UNBN0101-UNBN0103 The 17 options are collapsed into 3 options as follows: • UNBN0101 - UNBN base — Translations and routing by SPID — QMS statistics by SPID — Billing restrictions by SPID — Screening for billing agreement • UNBN0102 - Queuing by SPID • UNBN0103 - Branding by SPID The related table TOPSFTR tuples are: • UNBUNDLING_TRANSLATIONS_VIA_SPID for UNBN Translations and Routing (UNBN0101) • UNBUNDLING_SPID_IN_MIS_STREAM for UNBN Queueing (UNBN0101) • CALL_REST_FOR_WSALE for UNBN Call Restrictions for Wholesaling (UNBN0101) • SCREEN_FOR_BILLING_AGREEMENT for UNBN Screening for Billing Agreement (UNBN0101) • UNBUNDLING_REFINEMENT_FOR_SPID for UNBN Queueing (UNBN0102) • UNBUNDLING_BRANDING_VIA_SPID for UNBN SPID Assignment (UNBN0103) and UNBN SPID Branding (UNBN0101)

Translations table flow

This feature does not have a translations table flow.

Limitations and restrictions

TOPS and Succession Interworking has no limitations or restrictions.

Interactions

TOPS and Succession Interworking does not interact with other functionalities.

TOPS and Succession Interworking (continued)

Activation and deactivation by the user

TOPS and Succession Interworking does not require activation or deactivation by the user.

Billing

TOPS and Succession Interworking does not generate billing records or changes.

Station Message Detail Recording

TOPS and Succession Interworking does not require Station Message Detail Recording.

Office parameters used by TOPS and Succession Interworking

TOPS and Succession Interworking does not generate office parameters.

Datafill sequence

The table that follows lists the tables that require datafill to put TOPS and Succession Interworking into operation. You must enter data into the table in this order.

Datafill requirements for TOPS and Succession Interworking

Table	Purpose of table
TOPSFTR	TOPS Features enables/disables TOPS SOCs.

Datafill related to TOPS and Succession Interworking for table TOPSFTR

The table that follows provides the datafill related to TOPS and Succession Interworking for table TOPSFTR. This table includes only those fields that apply directly to TOPS and Succession Interworking.

TOPS and Succession Interworking (continued)

Datafill related to table TOPSFTR

Field	Entry	Explanation and action
FTRNAME	AUTHORIZATION_CODE_BILLING AUTOMATED_ROOM_AND_AUTH_NUM_COLL BELLCORE_NUMBER_PORTABILITY CALL_REST_FOR_WSALE CALLING_CARD_DENIAL_REASONS CANADIAN_EQUAL_ACCESS CELLULAR_AUTOMATIC_DA_CALL_COMP COMMERCIAL_CREDIT_CARD_SUPPORT COUNTRY_DIRECT DISALLOWED_CARD_ISSUER ESTIMATE_OF_CHARGES EXTERNAL_RATING FLEX_ANI GLOBAL_COMPETITIVE_ACCESS GOSS7_ANSI GOSS7_ETSI, IN_OPERATOR_BACKUP INTRA_LATA_PIC_VIA_OLNS ISUP_FOR_TOPS MESSAGE_DELIVERY_SERVICE MUSIC_AND_ANN_IN_QUEUE NUMBER_PORTABILITY OLNS_FOREIGN_LANGUAGE OLNS_NO_AUTOMATION ORIGINATING_LINE_NUMBER_SCREEN OSS7_OSNC OSSAIN_INITIAL_RELEASE OSSAIN_RELEASE_07 OSSAIN_RELEASE_09 OSSAIN_RELEASE_10 OSSAIN_RELEASE_11 OSSAIN_RELEASE_12 PRE_PAID_COIN QMS_BILLING_SATISFIED QMS_CASE RLT_FOR_ISUP RLT2_FOR_ISUP SCREEN_FOR_BILLING_AGREEMENT SECONDS_BASED_ANNOUNCEMENTS TOPS_ON_OFF_SWITCH UNBUNDLING_BRANDING_VIA_SPID UNBUNDLING_REFINEMENT_FOR_SPID UNBUNDLING_SPID_IN_MIS_STREAM UNBUNDLING_TRANSLATIONS_VIA_SPID	Feature name. This field is fixed, read only, it cannot be changed. This field indicates the feature name to be enabled or disabled in field FTRENABL. In order for a feature to be completely enabled, all of the following must be met. • SOC option OSB00101 must be on to enable the TOPS system. Refer to functionality TOPS On/Off Switch, OSB00101. • The SOC governing the feature must be on. • In table TOPSFTR, the tuple for the feature must be set to Y.

Datafill related to table TOPSFTR

Field	Entry	Explanation and action
FTRENABL	Y or N	Feature enable. This field enables (set to Y) or disables (set to N) the feature.

Warning messages are provided in the SOC procedures to caution the user of conflicting interactions. For example, if a given SOC option is changed from IDLE to ON, then for each SOC feature controlled by that SOC option, a message is displayed listing the state as specified in TOPSFTR. This enables the user to be aware of what features are enabled when the given SOC option is turned ON. Similarly, if a given SOC option is changed from ON to IDLE, a message is displayed listing all SOC features that would no longer be active.

Warning messages are also displayed if there is a conflict in the enable/disable status of a feature in TOPSFTR and the state of the SOC option controlling that feature. For example, when the user attempts to enable a SOC feature in TOPSFTR by setting FTRENABL to Y, a warning message is displayed if the SOC option controlling that feature is IDLE.

Datafill example for table TOPSFTR

The figure that follows shows sample datafill for table TOPSFTR.

TOPS and Succession Interworking (continued)

MAP example for table TOPSFTR

```
FTRNAME                                                    FTRENABL
------------------------------------------------------------------
AUTHORIZATION_CODE_BILLING                                 N
AUTOMATED_ROOM_AND_AUTH_NUM_COLL                           N
BELLCORE_NUMBER_PORTABILITY                                 Y
CALL_REST_FOR_WSALE                                         Y
CALLING_CARD_DENIAL_REASONS                                 Y
CANADIAN_EQUAL_ACCESS                                      Y
CELLULAR_AUTOMATIC_DA_CALL_COMP                            N
COMMERCIAL_CREDIT_CARD_SUPPORT                              N
COUNTRY_DIRECT                                              N
DISALLOWED_CARD_ISSUER                                      N
ESTIMATE_OF_CHARGES                                         N
EXTERNAL_RATING                                             Y
FLEX_ANI                                                    N
GLOBAL_COMPETITIVE_ACCESS                                  N
GOSS7_ANSI                                                  N
GOSS7_ETSI,                                                 Y
IN_OPERATOR_BACKUP                                          Y
INTRA_LATA_PIC_VIA_OLNS                                     N
ISUP_FOR_TOPS                                               Y
MESSAGE_DELIVERY_SERVICE                                    Y
MUSIC_AND_ANN_IN_QUEUE                                      Y
NUMBER_PORTABILITY                                          Y
OLNS_FOREIGN_LANGUAGE                                       Y
OLNS_NO_AUTOMATION                                          N
ORIGINATING_LINE_NUMBER_SCREEN                              N
OSS7_OSNC                                                   Y
OSSAIN_INITIAL_RELEASE                                       N
OSSAIN_RELEASE_07                                            N
OSSAIN_RELEASE_09                                            Y
OSSAIN_RELEASE_10                                            Y
OSSAIN_RELEASE_11                                            Y
OSSAIN_RELEASE_12                                            N
PRE_PAID_COIN                                               N
QMS_BILLING_SATISFIED                                       N
QMS_CASE                                                    N
RLT_FOR_ISUP                                                Y
RLT2_FOR_ISUP                                               N
SCREEN_FOR_BILLING_AGREEMENT                                Y
SECONDS_BASED_ANNOUNCEMENTS                                 N
TOPS_ON_OFF_SWITCH                                            N
UNBUNDLING_BRANDING_VIA_SPID                                Y
UNBUNDLING_REFINEMENT_FOR_SPID                              Y
UNBUNDLING_SPID_IN_MIS_STREAM                               N
UNBUNDLING_TRANSLATIONS_VIA_SPID                             N
```

TOPS and Succession Interworking (end)

Translation verification tools

TOPS and Succession Interworking does not use translation verification tools.

SERVORD

TOPS and Succession Interworking does not use the Service Order System (SERVORD).

TOPS AWT Enhancements

Ordering codes

Functional group ordering code: OSB00101

Functionality ordering code: not applicable

Release applicability

BCS32 and up

Prerequisites

To operate, TOPS AWT Enhancements requires BAS Generic, BAS00003.

Description

This functionality is provided by the following features:

Feature number	Feature name
AF1103	TOPS AMA on Operator Sequence Calls
AF1120	Busy Line Verify Average Work Time (AWT) Enhancements
AF1121	Special Verify Average Work Time (AWT) Enhancement
BR08957	Busy Line Verification

AF1103 - TOPS AMA on Operator Sequence Calls

This feature generates multiple Automatic Message Accounting (AMA) billing records when performing multiple operator functions.

AF1103 also provides the GEN AMA function for TOPS 04 and TOPS MP.

AF1120 - Busy Line Verify Average Work Time (AWT) Enhancements

This feature reduces the number of keystrokes required to perform the Busy Line Verify (BLV) service.

AF1121 - Special Verify Average Work Time (AWT) Enhancement

This feature reduces operator Average Work Time (AWT) on calls billed to a third number.

BR08957 - Busy Line Verification

This default class charging feature applies only to BC AMA format.

Operation

AF1103 -TOPS AMA on Operator Sequence Calls

This feature allows the operator to generate a separate AMA billing record for each operator service performed on behalf of the subscriber. The operator can generate AMA records as necessary to accurately bill each activity.

AMA records are generated by pressing the GEN AMA key at the Operator Position keyboard.

Note: An AMA record is still generated automatically at the completion of a call.

AF1103 allows the operator to generate an AMA record for three call types:

- 0- calls
- 0+ dialed calls requiring alternate billing
- 1+ dialed coin calls requiring operator intervention.

These are typical situations where operator involvement is required:

- 0- Calls
- 0+ dialed calls

  When the subscriber requests alternate billing (for example, to a calling card).
- 1+ dialed calls

  Coin calls when the operator is involved with coin collection.
- Call Attempts to Busy or Unanswered Numbers

  If the called number is busy or not answered, the subscriber can request that the operator try another number. An AMA record can be generated for each operator activity.
- Redirected Person-To-Person Call Attempts

  This occurs when a person-to-person call is completed but the called person is not available. The person who answers may be able to provide another telephone number for the person called. An AMA record can be generated for each attempt.
- Busy Line Verify

  The operator can monitor the line to verify a busy condition, to check for a problem with the line, or to interrupt a conversation in an emergency situation. An AMA record can be generated for each operator activity.

TOPS AWT Enhancements (continued)

User Perspective

AF1103 provides the Operating Company with the capability to have an AMA record produced for each call completion attempt or service access performed (e.g., BLV).

> ***Note:*** Presently, an AMA record is generated with the final call attempt and completion. The operator must manually ticket a multiple call completion attempt or a service access.

AF1103 allows the operator to generate an AMA record by pressing the GEN AMA key at the keyboard.

Calls handled by TOPS operators occasionally require multiple call attempts or access to a service (e.g., Directory Assistance or Toll and Assist). Depending upon local procedures, each call attempt or service access performed may require an AMA record to be generated. This feature provides the operator with the means to generate the required AMA record(s).

Typically, there are three times when the operator generates an AMA record:

- for each billable portion of a call completion
- for each call completion attempt
- for each service access performed for the subscriber.

A successful call completion generates an AMA record without operator intervention.

Billing Information

If the billing information is incomplete or inaccurate, the appropriate Operator Position CRT display field (for example, AMA or Calling Number) flashes to alert the operator. The operator is prompted to supply the necessary details.

When the information is complete, the operator presses GEN AMA and a GEN AMA message is displayed on the Operator Position CRT for one second. The GEN AMA message informs the operator that the billing record has been generated successfully. Because the subscriber can still require further assistance, the called number is retained until the call is cancelled or completed.

This feature does NOT cover all billing situations. Depending upon local procedures, the operator must manually ticket other call completion attempts or service accesses performed.

Example

In this example, a subscriber requests that the operator perform a busy line verification (BLV) on a line. As a result, the BLV shows that the line is clear (idle and no indication of trouble). To retain the BLV billing information (STA PD, STA SPL CLG, PER PD, or PER SPL CLG), the operator generates an AMA record for the BLV.

Then, the subscriber wants the operator to make the call and bill it to a calling card. The operator enters the calling card number, changes the class charge from STA PD to STA SPL CLG, outpulses the number, and presses POS RLS. An AMA record is automatically generated when the call is successfully completed.

This procedure produces AMA records with the correct billing information including charges for the BLV and for the call completion.

Coin Calls

The Coin Detection Circuit (CDC) remains attached to coin calls when an AMA record is generated. This allows the operator to collect charges for each portion of a billable call. Pressing the GEN AMA key automatically performs a coin collect.

Coin call charges are determined separately for Toll and Assist (TA) service.

- For DA service, the charge is determined by call type and class charge.
- For TA service, the charge is determined after the forward number and the class charge has been entered.

Directory assisted coin calls that leave the operator position and are later recalled will not have a CDC attached. For these calls, the operator is required to detect any coins deposited by counting the coin signals.

Hotel Calls

Hotels can choose to send billing records to a locally installed device (Autoquote) or to a device (Voicequote) installed at the Operating Company end office. An entry in the Special Directory Number Identification (SPLDNID) table indicates whether Autoquote or Voicequote is used. When the operator generates an AMA record, a billing record is produced on the device indicated in the SPLDNID table.

AF1120 - Busy Line Verify Average Work Time (AWT) Enhancements

This feature reduces the number of keystrokes required when the operator performs a Busy Line Verify (BLV).

TOPS AWT Enhancements (continued)

With the BLV service, a subscriber obtains operator assistance to determine whether a called line is in use. BLV allows the operator to verify the status of the called line, e.g., busy or clear. The operator can also check for a reported error condition, such as out-of-order, and report that condition to the subscriber.

With the Operator Interrupt service, the operator provides BLV and interrupts a conversation in progress to relay a message (usually an emergency message). If the called party is willing to hang up, the operator can connect the call from the subscriber to the called party. At the request of the subscriber, this connection can be handled as a call completion service and billed either with a billing ticket or GEN AMA function, if available.

User Perspective

AF1120 improves the operator AWT by reducing the keystrokes required to provide a BLV service.

Keystroke reduction is achieved in three areas:

- AF1120 automatically applies the Station Paid (STA PD) class charge to a BLV service of telephone offices with the Bellcore AMA format, if not explicitly class charged by the operator.
- AF1120 retrieves the called digits from the call completion attempt and outpulses them for the BLV attempt. The operator enters the called number once. Presently, when the subscriber requests BLV service following a call completion attempt on a 0- call, the operator enters the called number twice (once to make a call completion attempt and once to do Busy Line Verify).
- AF1120 provides a shorter keystroke sequence for Operator-Interrupt service. For example, if a BLV service is provided immediately prior to the Operator-Interrupt service, the called number is retrieved from the BLV attempt and applied to the Operator-Interrupt service.

AF1121 - Special Verify Average Work Time (AWT) Enhancement

Special Verify Average Work Time (AWT) Enhancement minimizes operator AWT on calls billed to a third number by allowing an operator to contact the third party without accessing a second loop.

Note: Like Busy Line Verify and GEN AMA, this feature is optional with TOPS 04 and standard with TOPS MP.

With the Special Verify feature, a subscriber obtains operator assistance to bill a call to a third or special number. The operator actions on a bill-to-third call

are identical with or without this feature, up to the point when the operator determines that third number billing acceptance should be obtained.

User Perspective

The Special Verify feature simplifies the operator actions required to obtain third number billing acceptance.

When a call arrives at an Operator Position, the operator must obtain and enter the third number as a special number, and class charge the call exactly the same way as without this feature.

This feature will not affect the optional database queries for billed number screening and fraudulent third numbers. After the queries are made, the operator must choose one of three possible dispositions for the call:

1. The operator must determine whether third number billing acceptance is required depending on the database query results, time of day, and Operating Company practice. If acceptance is required, the operator can choose either to invoke this feature or to access a second loop (bypassing this feature) to obtain acceptance.
2. After reaching the third party, the operator requests acceptance for third number billing, and the calling party is provided with a voice connection to both the operator and the third party. This connection allows the calling party to supply more information, if needed, to the operator or to the third party to obtain billing acceptance. On TOPS 04 and TOPS MP, the operator can use the SPLIT key function to break the calling party's voice connection, if necessary.
3. As soon as the third party provides or denies acceptance, the operator ends the conversation with the third party and terminates that connection. If the third party provides acceptance, the operator can then connect the called and calling parties. If the third party denies acceptance, the operator can request alternate billing.

Operation

The Special Verify feature is an enhancement of the existing TOPS BLV service implemented by F0967. The enhancement minimizes the number of required keystrokes and, as a result, reduces the AWT of the operator.

The Special Verify feature simplifies the selection of billing options. For BLV in telephone offices with Bellcore AMA format, the class charge is

TOPS AWT Enhancements (continued)

automatically set to STA PD. This feature supports three class charge conditions:

- the class charge can be entered by the operator
- the class charge entered during the initial call attempt can be used (except STA/PER collect or SPL CLD)
- the class charge is automatically set to STA PD (in telephone offices with Bellcore AMA format) if no class charge has been entered.

When a subscriber attempts a call and encounters a busy or trouble condition, the operator is contacted and requested to investigate the called line.

BR08957 - BVL default class charging applies only to BC AMA format

The Busy Line Verify AWT Enhancement feature in BCS26 introduced the capability of having a default class charge applied to BLV bills. If the operator does not explicitly class charge a BLV call, this feature will assign a class charge of STA PD.

PRS BR08957 documents that default class charging is provided to offices with BC AMA format and is not provided to offices with NT AMA format.

Prior to BCS26, offices with NT AMA format did not require class charging of BLV, whereas offices with BC AMA format have required class charging of BLV calls since BCS16. Because a valid class charge is required with BC AMA format, it is reasonable that the Special Verify feature (in TOPS AWT Enhancements) supplies a valid class charge (STA PD) as a default for BC AMA format. If the feature extended this default to NT AMA format, it would effectively eliminate the capability now available in NT AMA format offices of allowing BLV calls to be completed without class charging. As long as NT AMA format does not require class charging on BLV, hence allowing a nil class charge, it is inappropriate to to override the nil class charge with a default of STA PD.

Translations table flow

Translations table flow is not provided for TOPS AWT Enhancements.

Limitations and restrictions

The following limitations and restrictions apply to TOPS AWT Enhancements.

TOPS AWT Enhancements (continued)

AF1103 - TOPS AMA on Operator Sequence Calls

Pressing the GEN AMA key will NOT produce an AMA record in five situations:

- TOPS AMA on Operator Sequence Calls
- when an attempt is made to change services (for example, from DA to TA, or from TA to DA) while a forward connection is at the Operator Position
- when the billing information is incomplete or not present
- when a calling card, third number billing, or collect number is being verified
- when the operator has pressed the CA CALL key (i.e., cancelled the call)
- when the call detail information (e.g., class charge or called number) has not changed since GEN AMA was last pressed.

AF1120 - Busy Line Verify Average Work Time (AWT) Enhancements

Four class charges are NOT permitted when the BLV service is performed:

- Station Collect (STA COL)
- Person Collect (PER COL)
- Station Special Called (STA SPL CLD)
- Person Special Called (PER SPL CLD).

AF1121 - Special Verify Average Work Time (AWT) Enhancement

This feature cannot be invoked if any of the following conditions exist:

- the forward port is not empty
- the special number is flashing
- HOT is displayed adjacent to the special number.

Interactions

The following paragraphs describe the interactions between TOPS AWT Enhancements and other functionalities.

AF1103 - TOPS AMA on Operator Sequence Calls

This feature interacts with Automatic Coin Telephone Service (ACTS), ENSV0102, and can require the operator to collect and return a coin deposit for each billable portion of a call.

DA coin calls that are transferred from the Operator Position and are later recalled (e.g., following a coin collection) will not have a CDC attached. The operator is required to detect deposited coins by counting the coin signals.

TOPS AWT Enhancements (continued)

Activation/deactivation by the end user

TOPS AWT Enhancements requires no activation or deactivation by the end user.

Billing

AF1103 - TOPS AMA on Operator Sequence Calls

When an AMA billing record is generated, the billing information (e.g., class charge) carries over to the next segment of the call. If the billing information changes, the operator can produce an AMA record that reflects the change.

Station Message Detail Recording

TOPS AWT Enhancements does not affect Station Message Detail Recording.

Datafilling office parameters

The following table shows the office parameters used by TOPS AWT Enhancements. For more information about office parameters, refer to *Office Parameters Reference Manual.*

Office parameters used by TOPS AWT Enhancements

Table name	Parameter name	Explanation and action
OFCENG	TOPS_GEN_AMA_SET	This parameter allows the Operating Company to specify the types of calls for which the operator can generate AMA records. For example, in an Operator Centralization (OC) environment, the host switch can inhibit use of this feature until all the remote switches are upgraded and contain this feature. Any combination of call types (station, coin, hotel, or restricted) can be specified. NONE is the default.
Note: This parameter applies only to TA service calls.		

TOPS AWT Enhancements (continued)

Datafill sequence

The following table lists the tables that require datafill to implement TOPS AWT Enhancements. The tables are listed in the order in which they are to be datafilled.

Datafill tables required for TOPS AWT Enhancements

Table	Purpose of table
OFCENG	Office Engineering Table. This table contains data on engineering parameters for the office. Refer to “Datafilling office parameters" for how TOPS AWT Enhancements affects office parameters.
OPRTRANS	TOPS Operator Translation. This table

Datafilling table OPRTRANS

The TOPS Operator Translation table is used during the translation of digits dialed by a TOPS operator for normal, verification, delay, MCCS and overseas calls to define the following:

- the serving NPA
- Where class of service screening is required, the class of service screening subtable name assigned to the TOPS Operator
- the standard pretranslator subtable name assigned to the TOPS operator (when required).

Table OPRTRANS contains a fixed number of tuples (6) with fixed keys.

The following table shows the datafill specific to TOPS AWT Enhancements for table OPRTRANS. Only those fields that apply directly to TOPS AWT Enhancements are shown. For a description of the other fields, refer to the data schema section of this document.

Datafilling table OPRTRANS

Field	Subfield or refinement	Entry	Explanation and action
KEY		SPLVFY	The tuple TOPSLINE was unused; therefore, it was renamed SPLVFY and now controls the routing of bill-to-third number authorization calls to an Interexchange Carrier.

Datafill example for table OPRTRANS

The following example shows sample datafill for table OPRTRANS.

TOPS AWT Enhancements (end)

This example datafill does not apply to all situations. It should be used only as a means of understanding the relationship between some of the tables.

MAP display example for table OPRTRANS

KEY	SNPA	SCRNCL	PRTNM	LCANAME
OPERATOR	613	NSCR	OPER	NLCA
VERIFY	613	NSCR	OPVE	NLCA
SPLVFY	613	NSCR	NPRT	NLCA
DELAY	613	NSCR	BACK	NLCA
MCCS	613	NSCR	MCCS	NLCA
OVERSEAS	613	NSCR	NPRT	NLCA

TOPS BC/STS/SNPA

Ordering codes

Functional group ordering code: OSB00101

Functionality ordering code: not applicable

Release applicability

TOPS10 and up

TOPS BC/STS/SNPA was introduced in TOPS10.

Prerequisites

To operate, TOPS BC/STS/SNPA has the following prerequisites:

- Base Generic, BAS00003
- Table TOPSFTR parameter TOPS_ON_OFF_SWITCH =Y
- Translations and Routing, UNBN0101

Description

This functionality provides the following:

- A new method of determining the TOPS bill code information because of changes from the Telecom Act of 1996.
- The TOPS system decoupling of the Serving Translation Scheme (STS) from the Serving Numbering Plan Area (SNPA) for translations and screening.

This functionality is provided by the following feature:

Feature number	Feature name
AF7498	TOPS: Bill Code Enhancements & STS/SNPA Decoupling

Operation

Background

Before this functionality, table TOPSBC was the main source of billing information. The following is a datafill example.

TOPS BC/STS/SNPA (continued)

MAP display example for table TOPSBC

```
CLLI       BILLCODE  LCANAME  SCRNCL  ACTUALBC  CHGCLSS
-------------------------------------------------------
TBELLIC1   320       L32X     NSCR    619320    TOPS
TBELLIC1   321       L32X     NSCR    619321    TOPS
TBELLIC1   322       L32X     NSCR    619322    TOPS
TBELLIC1   323       L32X     NSCR    619323    TOPS
```

Table TOPSBC was used for the following:

- Expansion of a 7-digit calling number to 10 digits using the NPA in field ACTUALBC. Field ACTUALBC contains the NPA-NXX, so in addition to using the NPA, the NXX overwrites the calling NXX. This is acceptable since the NXX in field ACTUALBC is the same as field BILLCODE.
- Verification of the calling number using the NXX in field BILLCODE. All valid NXXs were required to be in table TOPSBC. If an NXX was not in TOPSBC, the NXX was invalid. This table ensured that the calling number received in signaling or by the operator on Automatic Number Identification Failure (ANIF) and Operator Number Identification (ONI) calls was valid for the geographic area served by that trunk group.
- Definition of the class of service screening name and local call area screening name for a given calling Number Exchange (NXX) on a given trunk group.
- Definition of a default NPA-NXX for display to the operator on ANIF and ONI calls. This default is field ACTUALBC.
- Definition of a charge class for Automatic Message Accounting (AMA). This value is used to index table TOPSENTC.

However, the following problems evolved:

- An NXX on a trunk group mapped to only one SNPA. As a result, the trunk group could not support duplicate NXXs. That is, the same NXX with different NPAs, like 919991 and 704991. Trunk groups that serve multiple SNPAs had to either restrict the assigned NXX codes to be unique or to route duplicate NXXs over separate trunk groups.
- TOPSBC required datafill for all the NXXs that could originate calls on a trunk group. With local number portability (LNP), when a number with a new NPA-NXX was ported into an office, a new entry was added to table TOPSBC on the TOPS switch. As a result, there was expected to be a considerable expansion of the number of entries in table TOPSBC . It was anticipated that LNP would cause an explosion in the number of NXXs on a trunk group basis.

- Unique service provider processing for class of service screening and local call area screening could not be supported by table TOPSBC.
- Functionality UNBN Translations and Routing, UNBN0003, in release TOPS09 created a new translations and screening scheme which uses the NPA-NXX of the calling number. However, (ANI) currently signals 7 digits (NXX-XXXX). Also, the operator can enter 7 digits. And, the service provider identifier (SPID) is used for the new translations and screening.
- Functionality UNBN Translations and Routing also uses table TRKGRP (type TOPS) field SNPA for code translations. The TOPS system has treated the STS and SNPA as interchangable. Therefore, the STS/SNPA was used for two different functions: translations and screening, and calling number expansion.

For these reasons, billing is changed as given in the following sections.

Enable new method

The new billing method is enabled by table TRKGRP (TOPS trunks) or ISUPTRK (ISUP trunks) new field BCTYPE = ENHBC. Otherwise, the old method is selected by field BCTYPE = TOPSBC.

Separation of STS and SNPA

The STS and SNPA are separated. The STS is used only for translations and screening and the SNPA is used only for 7-digit directory number expansion. The datafill changes are given in the datafill procedure section and summarized as follows:

- Table TRKGRP (type TOPS) uses existing field SNPA only for directory number expansion.
- Table TRKGRP (type TOPS) has new field STS which is used only for translations and screening.
- Table OPRTRANS field SNPA is deleted and table TOPSPARM parameters OPR_SPECIFIED_SNPA and DELAY_SPECIFIED_SNPA are added. In table OPRTRANS, only the delay and operator tuples required number expansion with the SNPA. So, this function is moved to table TOPSPARM.
- Table OPRTRANS field STS is added for translations and screening.

Calling number expansion

The new method (given below) of expanding a 7-digit calling number to 10 digits is enabled by table TRKGRP or ISUPTRK field BCTYPE = ENHBC. Otherwise, when field BCTYPE = TOPSBC, the old method is used, which reads table TOPSBC field ACTUALBC for the NPA-NXX.

TOPS BC/STS/SNPA (continued)

For the new method of 7 to 10 digit expansion of the calling number, the system first checks new table TCLG7DIG for the trunk group. This table contains SNPAs that are different from the trunk group SNPAs. If the trunk group is not in table TCLG7DIG, the system uses table TRKGRP field SNPA. Therefore, table TCLG7DIG datafill is not required if the calling SNPA is the same as the trunk group.

Unlike table TOPSBC, table TCLG7DIG does not overwrite the NXX of the calling number. This restriction allows the end office to set and keep the NXX as desired by the subscriber without the TOPS office changing it.

Note that the new table (TCLG7DIG) cannot handle duplicate NXXs any better than TOPSBC. There is no way to predict what the SNPA is if only given the NXX.

For 7 to 10 digit expansion of operator and delay calls, the SNPA is retrieved from table TOPSPARM instead of table OPRTRANS. As mentioned above, table TOPSPARM contains new parameters OPR_SPECIFIED_SNPA and DELAY_SPECIFIED_SNPA.

Note: For intercept calls, the called digits are received in the ANI spill instead of the calling number. Intercept calls are signalled as follows: KP + ANI ID + CLD + ST. As a result, FNPA7DIG is not used to prepend the SNPA to the called number. Instead, the calling bill code table (either TOPSBC or TCLG7DIG) is used to prepend the SNPA to the called number. With intercept, if an entry is not found in the bill code table (TOPSBC or TCLG7DIG) for a 7 digit called number, the SNPA on the trunk group is used to expand to 10 digits. For the 10 digit case, the SNPA is not overridden.

Calling number verification

The new verification is enabled in table TRKGRP or ISUPTRK (as applicable) with the following fields:

- Field BCTYPE = ENHBC (has refinement CLGVER)
- Refinement CLGVER = Y

When CLGVER = Y, table TCLGVER is checked for valid NPA-NXXs in the trunk group. If an entry is not found, the calling number is invalid (ANIF). If CLGVER = N, table TCLGVER is not checked and all calling numbers are accepted.

If field BCTYPE = TOPSBC, the old method is used, which checks table TOPSBC field BILLCODE for a valid NXX. Centralized AMA (CAMA) / Remote Operator Number Identification (RONI) continues to support seven digits.

Note: To eliminate using TOPSBC all together, the Unbundling Translations and Routing functionality (UNBN0101) in LET09 is needed. If the translations and routing functionality is not used, TOPSBC datafill must be kept because of the class of service and local call area screening names. TCLG7DIG is still used but there is duplicate datafill in TOPSBC to provide screening information.

Operator display of ONI and ANIF calls

The default NPA-NXX displayed to the operator at call arrival for ANIF and ONI calls is generally used to provide a geographic area of origin to the operator. The operator may use this information on an emergency call to select the nearest fire or police. With LNP, the association of the calling NPA-NXX with a geographic area is no longer maintained. Therefore, the operator requires an additional display.

Note, table TRKGRP (type TOPS) field NPANXXRQ = Y enables display of the originating NPANXX to the operator.

The new method of display for ONI and ANIF calls is enabled in table TRKGRP or ISUPTRK by field BCTYPE = ENHBC. Then, the NPA-NXX displayed to the operator is taken from table TRKGRP (type TOPS) field DISPDIGS. This change also applies to any other cases where the first entry in TOPSBC is used for the first six ditits of the calling numbr. And, this change also applies to AMA for calls with no calling number.

However, if BCTYPE = ENHBC, but table TOPSTOPT field NEWXLA = N, the screening names (LCANAME and SCRNCL) are taken from table TOPSBC.

If field BCTYPE = TOPSBC, the old method is used, which reads the default NPA-NXX from table TOPSBC field ACTUALBC in the first tuple for the trunk group.

Charge class

The class charge is used for AMA. Table TRKGRP or ISUPTRK field BCTYPE = ENHBC selects the new method of class charge. This method uses value TOPS to index table TOPSENTC, which contains an entry code.

However, if field BCTYPE = TOPSBC, the old method is used which reads table TOPSBC field CHGCLSS. The CHGCLSS value is used to index table TOPSENTC.

If there is a need for a unique Charge Class on an NXX basis, then the old must be used which uses table TOPSBC.

TOPS BC/STS/SNPA (continued)

Translations and screening

The new translations and screening is provided by functionality UNBN Translations and Screening, UNBN0101. Refer to that functionality for information.

This new method uses the STS for translations and screening, which is consistent with the new role of the STS given above.

The new method uses the calling NPA-NXX, whereas the old method used the NXX. Also, the new method supports duplicate NXXs.

In release TOPS10, feature AF7475 (Local Calling Area Six-Digit Screening and STS Decoupling) introduced a new six digit screening method to replace the three digit screening method used today in North American translations through table LCASCRCN. However, the TOPS system could not use that scheme. Therefore, an LCANAME that represents six digits could not be entered in tables TOPSBC, CLGSET, TOPSDP, TRKGRP, ISUPTRK, and OPRTRANS.

Beginning in release TOP11, the six digit LCA capability is available for the new TOPS translations and screening scheme. Therefore, table TOPSDP field LCANAME can accept a name that represents the new range. The new set of tables which are involved with Local Call Area Six digit Screening are described in feature AF7475. Refer to functionality LCA Six-Digit Screening and STS Decoupling, LOC00023, in this manual.

Translations table flow

The TOPS BC/STS/SNPA translations tables are described in the following list:

- Table HNPACONT or SNPANAME (as applicable) defines NPAs for the home NPA area.
- Table CLLI defines names of trunk groups.
- Table TRKSGRP defines trunk group hardware characteristics.
- Table TRKGRP defines trunk group software characteristics.
- Table TCLG7DIG expands a seven digit ANI to a 10-digit calling number.
- Table TCLGVER defines valid NPANXXs on trunks, used for billing number NXX verification.
- Table TOPSPARM contains TOPS office parameters.

The TOPS BC/STS/SNPA translation process is shown in the flowchart that follows.

TOPS BC/STS/SNPA (continued)

Table flow for TOPS BC/STS/SNPA

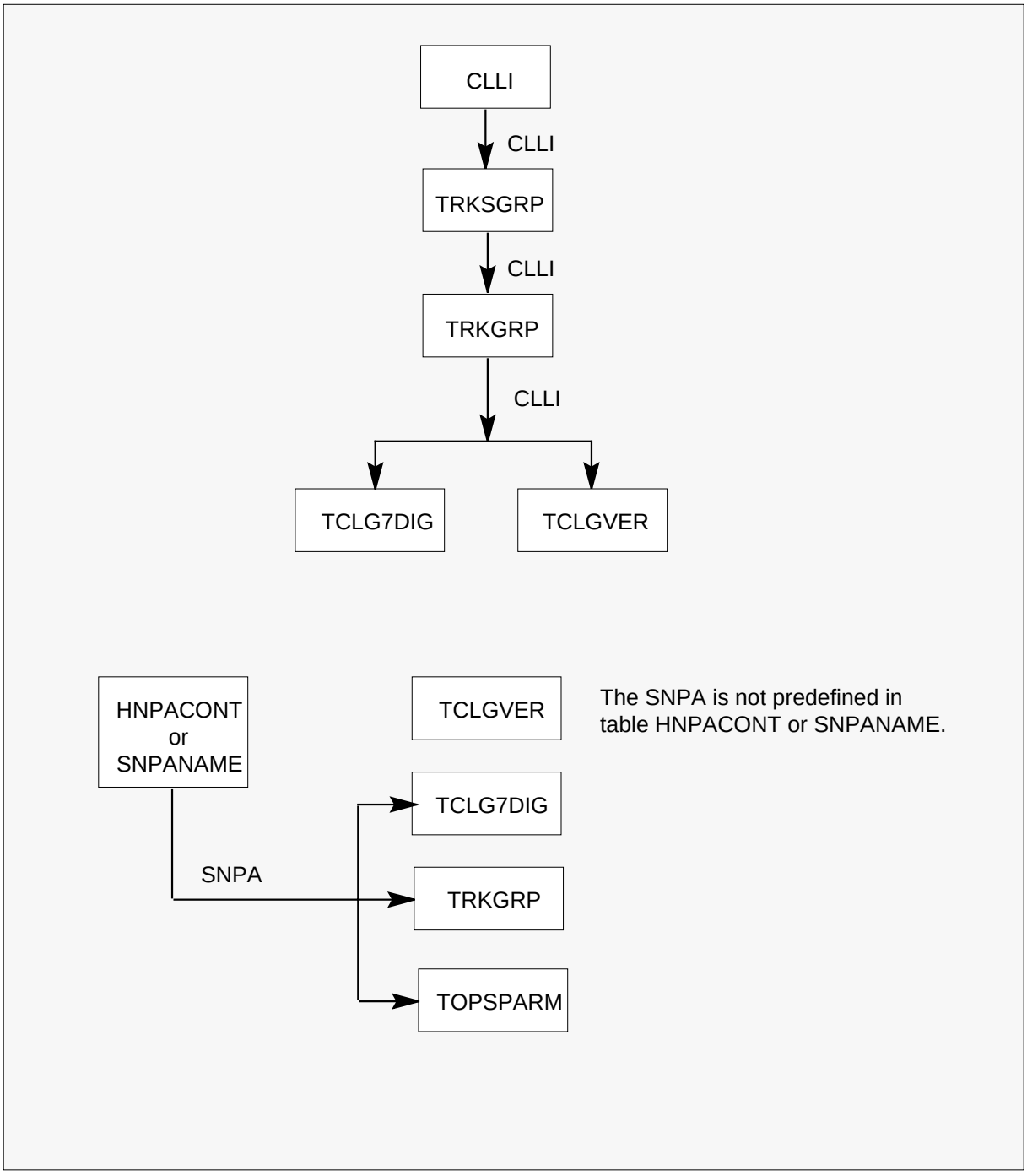

TOPS BC/STS/SNPA (continued)

The following table lists the datafill content used in the flowchart.

Datafill example for TOPS BC/STS/SNPA

Datafill table	Example data
HNPACONT	619 Y 1000 8 (58) (10 (0) (0)
CLLI	TBELLIC1 300 1 TOPS_IC_BELL_SIG_1
TRKSGRP	TBELLIC1 1 DS1SIG IC MF WK N 30 30 MW MW N N Y M UNEQ $
TRKGRP	TBELLIC1 TOPS 0 TLD NCRT IC MIDL 619 PTOP NLCA NSCR Y SP COMBINED N Y 0 0000 NONE BELL TOPSBC 16 10 10 Y N OFFHK N N
TCLG7DIG	TBELLIC1 322 619
TCLGVER	TBELLIC1 619322
TOPSPARM	OPR_SPECIFIED_SNPA 619

Limitations and restrictions

The following limitations and restrictions apply to TOPS BC/STS/SNPA:

- A single trunk group can have only one NPA associated with each NXX using 7-digit ANI signalling.
- STS is not currently available for Intertoll (IT) and Access Tandem to Carrier (ATC) trunks.

Interactions

The following paragraphs describe the interactions between TOPS BC/STS/SNPA and other functionalities.

This functionality interacts with functionality UNBN Translations and Routing, UNBN0101 (feature AF7159 TOPS Unbundling: SPID Processing, Translations, and Routing). This feature introduces a new TOPS Standard Translations and Screening scheme.

Activation/deactivation by the end user

TOPS BC/STS/SNPA requires no activation or deactivation by the end user.

Billing

TOPS BC/STS/SNPA does not affect billing.

Station Message Detail Recording

TOPS BC/STS/SNPA does not affect Station Message Detail Recording.

Datafilling office parameters

TOPS BC/STS/SNPA does not affect office parameters.

Datafill sequence

The following table lists the tables that require datafill to implement TOPS BC/STS/SNPA. The tables are listed in the order in which they are to be datafilled.

Datafill tables required for TOPS BC/STS/SNPA

Table	Purpose of table
TRKGRP	TRKGRP type TOPS defines the trunk group characteristics.
ISUPTRK	Integrated Services Digital Network User Part Trunk contains information for ISUP trunks to interact with the TOPS environment.
TCLG7DIG	TOPS Calling Seven Digits expands a seven digit ANI to a 10-digit calling number.
TCLGVER	TOPS Calling Number Verification defines valid NPANXXs.
OPRTRANS	TOPS Operator Translations provides translations information for TOPS operator dialed normal, verification, delay, MCCS, and overseas calls.
TOPSPARM	TOPS Parameters contains TOPS office parameters.

Datafilling table TRKGRP (TOPS)

The following table shows the datafill specific to TOPS BC/STS/SNPA for table TRKGRP (TOPS). Only those fields that apply directly to TOPS BC/STS/SNPA are shown. For a description of the other fields, refer to the data schema section of this document.

Datafilling table TRKGRP (TOPS)

Field	Subfield or refinement	Entry	Explanation and action
	GRPTYP	TOPS	Group type. The following changes only apply to TOPS type trunks.
	SNPA	3 digits from HNPACONT or SNPANAME	Serving numbering plan area. This existing field now is used only to expand a 7-digit calling DN to a 10-digit calling number. The entry must be previously defined in either table HNPACONT or SNPANAME as applicable.

TOPS BC/STS/SNPA (continued)

Datafilling table TRKGRP (TOPS)

Field	Subfield or refinement	Entry	Explanation and action
	STS	3 digits from HNPACONT or SNPANAME	Serving translation scheme. This new field is used to index the TOPS base translations and screening tables. The entry must be previously defined in either table HNPACONT or SNPANAME. For dump and restore, the SNPA field is copied to the STS field.
	NOBILLCD	0 to 999	Number of bill codes. This field is deleted. The information is transferred to new field BILLCD refinement NUMBC. This field was present for all field SIGTYPE values.
	BILLCD	see subfield	Billing code. This new field consists of subfield BCTYPE and refinements. This field applies to all field SIGTYPE values.

TOPS BC/STS/SNPA (continued)

Datafilling table TRKGRP (TOPS)

Field	Subfield or refinement	Entry	Explanation and action
	BCTYPE	TOPSBC or ENHBC	Billing code type. This subfield indicates the TOPS billing code method for this trunk group. The values are the following: TOPSBC - The earlier TOPS billing code method, which is the following: • For 7 to 10 digit expansion of the calling number, the SNPA is taken from table TOPSBC field ACTUALBC (first 3 digits). Also, the NXX in ACTUALBC overwrites the NXX of the 7 digit DN. • For 7 to 10 digit expansion of operator and delay calls, the SNPA is taken from table TOPSPARM, parameters OPR_SPECIFIED_SNPA and DELAY_SPECIFIED_SNPA. • For calling number verification, the NXX is checked in table TOPSBC, field BILLCODE. • For ONI and ANIF calls, the default NPA-NXX is displayed to the operator, taken from TOPBC field ACTUALBC in the first tuple for the trunk group. • For class charge, table TOPSBC field CHGCLSS is used to index table TOPSENTC. For value TOPSBC in this field, enter data in refinement NUMBC.

TOPS BC/STS/SNPA (continued)

Datafilling table TRKGRP (TOPS)

Field	Subfield or refinement	Entry	Explanation and action
			ENHBC - The enhanced TOPS billing code method, which is as follows: • For 7 to 10 digit expansion of the calling number, the SNPA is taken from table TRKGRP or TCLG7DIG (if trunk is present). Table TCLG7DIG does not overwrite the NXX of the calling number.0 • For 7 to 10 digit expansion of operator and delay calls, the SNPA is taken from table TOPSPARM, parameters OPR_SPECIFIED_SNPA and DELAY_SPECIFIED_SNPA. • For calling number verification, if subfield CLGVER = Y, the NXX is checked in table TCLGVER. Tthis verification is preformed after 7 to 10 digit expansion. • For ONI and ANIF calls, the NPA-NXX displayed to the operator is taken from table TRKGRP field DISPDIGS. • For class charge, value TOPS is always used to index table TOPSENTC. For value ENHBC in this field, enter data in refinements CLGVER and DISPDIGS.
	CLGVER	Y or N	Calling number verification. Enter data in this field if field BCTYPE = ENHBC. Enter Y to verify the calling NPA-NXX in table TCLGVER. Otherwise, enter N for no verification. For N, table TCLGVER is not accessed and all calling numbers are accepted.

Datafilling table TRKGRP (TOPS)

Field	Subfield or refinement	Entry	Explanation and action
	DISPDIGS	6 digits	Display digits. Enter data in this field if field BCTYPE = ENHBC. Enter the NPA-NXX for display to the operator for ONI and ANIF calls.
	NUMBC	1 to 999	Number of billing codes. Enter data in this field if field BCTYPE = TOPSBC. Enter the number of billing codes (NXXs allocated to originate traffic on this trunk group) plus spares that are reserved in table TOPSBC. This field replaces field NOBILLCD. The MAP display indicates the range is 0-999; however, the system does not allow 0.

Datafill example for table TRKGRP

The following example shows sample datafill for table TRKGRP.

MAP display example for table TRKGRP

```
GRPKEY
                                                                GRPINFO
-------------------------------------------------------------------------
TBELLIC1
   TOPS 0 TLD NCRT IC MIDL 619 619 PTOP NLCA NSCR Y SP COMBINED N Y 0
   0000 NONE BELL TOPSBC 16 10 10 Y N OFFHK N N
TBELLIC2
   TOPS 0 TLD NCRT IC MIDL 619 619 PTOP NLCA NSCR Y SP COMBINED N Y 0
   0000 NONE BELL ENHBC Y 619322 10 10 Y N OFFHK N N
TBELLIC3
   TOPS 0 TLD NCRT IC MIDL 619 619 PTOP NLCA NSCR Y SP COMBINED N Y 0
   0000 NONE BELL ENHBC N 619320 10 10 Y N OFFHK N N
```

Datafilling table ISUPTRK

The following table shows the datafill specific to TOPS BC/STS/SNPA for table ISUPTRK. Only those fields that apply directly to TOPS BC/STS/SNPA

TOPS BC/STS/SNPA (continued)

are shown. For a description of the other fields, refer to the data schema section of this document.

Datafilling table ISUPTRK

Field	Subfield or refinement	Entry	Explanation and action
NOBILLCD		0 to 999	Number of bill codes. This field is deleted. The information is transferred to new field BILLCD refinement NUMBC.
BILLCD		see subfields	Billing code. This new field consists of subfield BCTYPE and refinements.
	BCTYPE	TOPSBC or ENHBC	Billing code type. This subfield indicates the TOPS billing code method for this trunk group. The values are the following: TOPSBC - The earlier TOPS billing code method, which is as follows: • For 7 to 10 digit expansion of the calling number, the SNPA is taken from table TOPSBC field ACTUALBC (first 3 digits). Also, the NXX in ACTUALBC overwrites the NXX of the 7 digit DN. • For 7 to 10 digit expansion of operator and delay calls, the SNPA is taken from table TOPSPARM parameters OPR_SPECIFIED_SNPA and DELAY_SPECIFIED_SNPA. • For calling number verification, the NXX is checked in table TOPSBC field BILLCODE. • For ONI and ANIF calls, the default NPA-NXX in table TOPSBC field ACTUALBC in the first tuple for the trunk group is displayed to the operator. • For class charge, table TOPSBC field CHGCLSS provides the index into table TOPSENTC. For value TOPSBC in this field, enter data in refinement NUMBC.

TOPS BC/STS/SNPA (continued)

Datafilling table ISUPTRK

Field	Subfield or refinement	Entry	Explanation and action
			ENHBC - The enhanced TOPS billing code method, which is as follows: • For 7 to 10 digit expansion of the calling number, the SNPA is taken from table TRKGRP or TCLG7DIG (if trunk is present). Table TCLG7DIG does not overwrite the NXX of the calling number. • For 7 to 10 digit expansion of operator and delay calls, the SNPA is taken from table TOPSPARM, parameters OPR_SPECIFIED_SNPA and DELAY_SPECIFIED_SNPA. • For calling number verification, if subfield CLGVER = Y, the NXX is checked in table TCLGVER. This verification is preformed after 7 to 10 digit expansion. • For ONI and ANIF calls, the NPA-NXX displayed to the operator is taken from table ISUPTRK field DISPDIGS. • For class charge, value TOPS is always used to index table TOPSENTC. For ENHBC in this field, enter data in refinements CLGVER and DISPDIGS.
	NUMBC	1 to 999	Number of billing codes. Enter data in this field if field BCTYPE = TOPSBC. Enter the number of billing codes (NXXs allocated to originate traffic on this trunk group) plus spares that are reserved in table TOPSBC. The MAP display indicates the range is 0-999. However, the system does not allow 0. (Note, this field replaces field NOBILLCD.)

TOPS BC/STS/SNPA (continued)

Datafilling table ISUPTRK

Field	Subfield or refinement	Entry	Explanation and action
	CLGVER	Y or N	Calling number verification. Enter data in this field if field BCTYPE = ENHBC. Enter Y to verify the calling NXX in table TCLGVER. Otherwise, enter N for no verification.
	DISPDIGS	6 digits	Display digits. Enter data in this field if field BCTYPE = ENHBC. Enter the NPA-NXX for display to the operator for ONI and ANIF calls.

Datafill example for table ISUPTRK

The following example shows sample datafill for table ISUPTRK.

MAP display example for table ISUPTRK

```
GRPKEY    CONNTYPE    LCANAME   BILLCD           CALLSRC    ANI2CLI
  RLT       SNTPDRST   DNLKUP   DISPLAY
-------------------------------------------------------------------
IUPTRK1   NONE        NLCA      TOPSBC 16          ORIG      N
  NONE       N          N       0
IUPTRK2   NONE        NLCA      ENHBC Y 619320     TERM      Y
  NONE       Y          N       0
```

Datafilling table TCLG7DIG

TOPS calling seven digit number is a new table that is used with the enhanced billing code method to expand a 7-digit calling number to ten digits by appending the NPA. This table is only accessed for 7-digit expansion if table ISUPTRK or TRKGRP has field BCTYPE = ENHBC. Then, if a trunk is not in table TCLG7DIG, the SNPA is taken from table TRKGRP or ISUPTRK field SNPA. This hierarchy is used to indicate NXXs that require a different SNPA than is in table TRKGRP.

Individual trunk groups could be switched to use this table by changing the BILLCD subfield BCTYPE to ENHBC on the trunk group.

Tables TRKGRP and HNPACONT (or SNPANAME) require datafill before table TCLG7DIG.

The fields are described as follows:

Datafilling table TCLG7DIG

Field	Subfield or refinement	Entry	Explanation and action
TCLG7KEY		see subfield	TOPS calling number 7-digit key. This field is the key to the table and consists of subfields CLLI and NXX.
	CLLI	name from TRKGRP	Common language location identifier. Enter a TOPS trunk previously defined in table TRKGRP.
	NXX	000 to 999	Billing code NXX of the calling party. Enter a billing code NXX that requires a different SNPA than is in table TRKGRP field SNPA.
SNPA		value from HNPACONT or SNPANAME	Serving numbering plan area. Enter the SNPA that is used to expand the 7-digit ANI to 10 digits. The entry must be previously defined in table HNPACONT.

Datafill example for table TCLG7DIG

The following example shows sample datafill for table TCLG7DIG.

MAP display example for table TCLG7DIG

```
CLLI      NXX   SNPA
-------------------------------------------------------
TBELLIC1  320   919
TBELLIC1  322   619
TBELLIC2  320   813
```

Datafilling table TCLGVER

TOPS calling number verification is a new table for verification of the calling NXX billing code. This table contains all valid NPA-NXXs for a given trunk group. This table is accessed only if table TRKGRP or ISUPTRK has field CLGVER = Y. Note, this verification is preformed after 7 to 10 digit expansion so the calling number is guaranteed to be 10 digits. If CLGVER = N, table TCLGVER is not accessed and all calling numbers are accepted.

Individual trunk groups could be switched to use this table by changing the BILLCD subfield BCTYPE to ENHBC on the trunk group.

TOPS BC/STS/SNPA (continued)

Tables TRKGRP and HNPACONT (or SNPANAME) require datafill before table TCLG7DIG.

The fields are described as follows:

Datafilling table TCLGVER

Field	Subfield or refinement	Entry	Explanation and action
GRPKEY		see subfield	Group key. This field is the key to the table and consists of subfields CLLI and NXX.
	CLLI	name from TRKGRP	Common language location identifier. Enter a TOPS trunk previously defined in table TRKGRP.
	NPANXX	6 digits	Billing code NPA-NXX of the calling party. Enter a valid NPA-NXX for this trunk group. The NPA does not have to be previously defined in table HNPACONT nor SNPANAME. There must be a tuple for each NPA-NXX on this trunk group. The NXX billing codes include the following: • all central office NXX codes • special billing codes • wide area telephone service (WATS) originating codes that are allowed to originate direct distance dialing (DDD) calls over the trunk group

Datafill example for table TCLGVER

The following example shows sample datafill for table TCLGVER.

MAP display example for table TCLGVER

```
GRPKEY
------------------------------------------------------
TBELLIC1  619320
TBELLIC1  619322
TBELLIC2  619320
```

Datafilling table OPRTRANS

The following table shows the datafill specific to TOPS BC/STS/SNPA for table OPRTRANS. Only those fields that apply directly to TOPS

BC/STS/SNPA are shown. For a description of the other fields, refer to the data schema section of this document.

Datafilling table OPRTRANS

Field	Subfield or refinement	Entry	Explanation and action
	SNPA	3 digits from HNPACONT	Serving numbering plan area. This field is deleted. With the enhanced billing code method, the SNPA is only used to expand 7-digit calling numbers to 10 digits. In table OPRTRANS, only OPERATOR and DELAY tuples require expansion. Therefore, SNPA expansion is moved to table TOPSPARM new parameters OPR_SPECIFIED_SNPA and DELAY_SPECIFIED_SNPA. Dump and restore copies this field to new field STS and deletes the SNPA.
	STS	3 digits from HNPACONT	Serving translation scheme. This new field is used to index the TOPS base translations and screening tables. The entry must be previously defined in table HNPACONT.

Datafill example for table OPRTRANS

The following example shows sample datafill for table OPRTRANS.

MAP display example for table OPRTRANS

```
KEY       STS    SCRNCL   PRTNM    LCANAME
-------------------------------------------------------
OPERATOR  619    NSCR     OPER     NLCA
VERIFY    619    NSCR     OPVE     NLCA
SPLVFY    619    NSCR     OPER     NLCA
DELAY     619    NSCR     BACK     NLCA
MCCS      619    NSCR     MCCS     NLCA
OVERSEAS  619    NSCR     NPRT     NLCA
```

Datafilling table TOPSPARM

The following table shows the datafill specific to TOPS BC/STS/SNPA for table TOPSPARM. Only those parameters that apply directly to TOPS

TOPS BC/STS/SNPA (end)

BC/STS/SNPA are shown. For a description of the other parameters, refer to the data schema section of this document.

Datafilling table TOPSPARM

Parameter name	Explanation and action
DELAY_SPECIFIED_SNPA	This parameter specifies the SNPA used to expand a 7-digit calling number to 10 digits for a delay call. This parameter replaces the table OPRTRANS SNPA field of the DELAY tuple. Enter an SNPA that is defined in table HNPACONT or SNPANAME. Dump and restore copies the table OPRTRANS field DELAY value.
OPR_SPECIFIED_SNPA	This parameter specifies the SNPA used to expand a 7-digit calling number to 10 digits for an operator call. This parameter replaces the OPRTRANS SNPA field of the OPERATOR tuple. Enter an SNPA that is defined in table HNPACONT or SNPANAME. Dump and restore copies the table OPRTRANS field OPERATOR value.

Datafill example for table TOPSPARM

The following example shows sample datafill for table TOPSPARM.

MAP display example for table TOPSPARM

```
PARMNAME                                          PARMVAL
--------------------------------------------------------
DELAY_SPECIFIED_SNPA                              919
OPR_SPECIFIED_SNPA                                619
```

Translation verification tools

TOPS BC/STS/SNPA does not use translation verification tools.

SERVORD

TOPS BC/STS/SNPA does not use SERVORD.

TOPS Bellcore AMA

Ordering codes

Functional group ordering code: OSB00101

Functionality ordering code: not applicable

Release applicability

TOPS03 and up

TOPS Bellcore AMA was introduced in BCS29.

Prerequisites

To operate, TOPS Bellcore AMA requires the following:

- Functionality BAS Generic, BAS00003
- Table TOPSFTR paramter TOPS_ON_OFF_SWITCH = Y

Description

This functionality is provided by the following features:

Feature number	Feature name
BR0634	Bell (U.S.) AMA Format Compatibility
AF1152	AMA for TOPS MP DA Calls
AL0420	TOPS Call Code 009 for DA
BR12829	ONI Enhancement for Non-operator-Handled TOPS & CAMA Calls
BX48178	Removal of TOPS_411_RECORD_NPA_IN_AMA (TOPS03)

This functionality provides Automatic Message Accounting (AMA) in Bellcore Equal Access (EA) format for TOPS plus additional capabilities as described below. This functionality is made up of the following features:

BR0634 - Bell (U.S.) AMA Format Compatibility

This feature provides the Bellcore EA AMA format for TOPS. In addition, BR0634 specifies operator-suspected fraud, coin credit, walkaway, and the number of occurrences for credit adjustment as well as the amount of adjustment. This latter capability is provided through table datafill.

AF1152 - AMA for TOPS MP DA Calls

This feature generates TOPS Bellcore AMA records for Directory Assistance (DA) and intercept service calls that are serviced by a TOPS operator. This feature also provides a method for applying a surcharge for DA calls that are completed from the TOPS MP position and for indicating the surcharge in the Bellcore AMA records.

AL0420 - TOPS Call Code 009 for DA

This feature generates TOPS Bellcore AMA records with call code 009, structure code 724, for 411 DA calls. This feature provides the ability to generate an AMA record for the previously mentioned call types that do not index table TOPS during translations and that are forwarded to a DA center (DA service is not provided by the TOPS operator). This feature also modifies the terminating Numbering Plan Area (NPA) and terminating number fields of the Bellcore AMA records for 411 DA calls.

BR12829 - ONI Enhancement for Non-operator-Handled TOPS & CAMA Calls

This feature populates the Originating NPA and Originating Number fields of certain AMA records when no calling number is present. For calls originating from TOPS trunks, the NPA and NXX are taken from table TOPSBC based on the incoming trunk group. For calls originating from SC trunks, the NPA and NXX are taken from table BILLCODE based on the incoming trunk group.

BX48178 - Removal of TOPS_411_RECORD_NPA_IN_AMA (TOPS03)

Effective TOPS03, the functionality of parameter TOPS_411_RECORD_NPA_IN_AMA in table OFCVAR is removed. This is to prevent non-compliance with the Bellcore TOPS AMA record if the parameter is set to N. Otherwise, when the parameter is set to N, number 411 could erroneously appear in the first three characters rather than the last three characters of the TERM NUMBER field.

Therefore, in TOPS03, TERM NUMBER for a 411 TOPS call is TERM NUMBER:4110000C, instead of TERM NUMBER:0000411C, regardless of whether parameter TOPS_411_RECORD_NPA_IN_AMA is set to Y or N. This change enforces Bellcore compliancy.

Operation

BR0634 - Bell (U.S.) AMA Format Compatibility

This feature does not introduce or modify any hardware.

This feature provides the Bellcore Equal Access (EA) AMA format for TOPS. In addition, it provides the functionality to the TOPS Charge Adjust Key (KP CHJ ADJ) and the KP Trouble (KPTRBL) Key to specify operator-suspected

TOPS Bellcore AMA (continued)

fraud, walkaway, part charge (specifies a change in billing), coin credit, number of occurrences for credit adjustment, and the amount of adjustment. This latter capability is provided through table datafill.

The two tables that provide this capability are the TOPS Operator Reporting Trouble Disposition (TOPSTRBL) table and the TOPS Equal Access Charge Adjust Key (CHGADJKY) table. The capability to generate a report for operator-suspected fraud and coin credit is datafilled in table TOPSTRBL. Table CHGADJKY maps the codes entered by the operator to a reason.

For this feature, the Operating Company must know what a particular charge adjust digit means. Prior to this feature, the charge adjust digit was chosen and used only by the downstream office. Now that part charge, coin credit, and walkaways can be indicated, a charge adjust digit must be available at the TOPS office. This is done through table CHGADJKY.

Table CHGADJKY maps the charge adjust digits to a type of charge adjust, namely coin credit, part charge, or walkaway.

If a charge adjust digit corresponds to one from table CHGADJKY, the appropriate AMA record is produced. If the charge adjust digit does not correspond to one from this table, the downstream definitions are used.

The AMA formatter decides what call code applies to a given call and which structure code is required, and formats the TOPS AMA record based on this information. The call code is determined by the type of call and the operator's keying actions.

AF1152 - AMA for TOPS MP DA Calls

This feature does not introduce or modify any hardware.

This feature provides the ability to optionally indicate DA and intercept service in TOPS Bellcore AMA records. DA service consists of responding to subscriber queries for directory assistance, requesting that information from a vendor-supplied data base, receiving that information at the TOPS MP position, and supplying that information to the subscriber. The information can be quoted to the subscriber by the operator or by an Audio Response Unit (ARU). Automatic billing is provided accordingly.

Intercept service is provided when a customer attempts to make a call to a number that is out of service or that has recently been changed. Information about the status of the called number is relayed to the customer either verbally or by an ARU.

Enhanced DA AMA

Prior to AF1152, billable 411 calls received structure code 00724 or 00725, call code 009. With the development of the DA capability for the TOPS MP position, DA and Intercept calls can be billed using all the class charges available for TOPS Toll and Assist (TA) calls. This capability is provided because structure codes 00724 and 00725 do not contain the appropriate fields necessary for recording all of the billing information. The Enhanced DA AMA capability provides a method of recording the necessary billing information by taking existing fields in structure codes and by adding new values to those fields to indicate DA and Intercept calls.

The Enhanced DA capability is controlled by the ENHAMA field (a YES/NO field) in table DABILL. When ENHAMA is set to Y, calls are appropriately identified in the structure code as being DA or Intercept. Fields in the following structure codes provide the enhanced DA capability:

Structure code and field name

Structure code	Field name
00700 - 00729	Service Feature
00730	Operator Service Feature
00733	Inward Service Type
00734	Service Feature

Structure codes XX731 and XX732 are for recording credit adjustments, and contain no corresponding field for indicating DA or Intercept Services. If a credit adjustment is needed for a DA or Intercept call, the following method should be used. When an operator keys KP CHG ADJ + Service Difficulty Number + START, the Service Difficulty Number is recorded in the Service Difficulty field of structure code 00731 or 00732, as appropriate. The Operating Company should also designate a field in table CHGADJKY as DA- or Intercept Service-related for further downstream processing.

The following table is an example of the structure code produced given the call origination type, the service class, and class charge of the call. The call origination type and service class are indicated by field DABKEY in table DABILL and in column DABKEY of the following table. This table shows only one call origination type, but the data applies to all non-intercept DA call

TOPS Bellcore AMA (continued)

origination types. Table DABILL indicates whether a revenue record is required.

Enhanced AMA Structure Code Example

DABKEY field	Class charge	Structure code	Call code	Service feature field
411 Station	Station Paid	00700	010	900
411 Station	Person Paid	00700	016	900
411 Coin	Person Collect	00712/00715	014	901/904
411 Coin	Station Special Calling	00718/00721	015	901/904
411 Hotel	Person Special Calling	00718	022	911
411 Hotel	Station Special Called	00718	022	911
411 Restrict	Person Special Called	00719	023	900
411 Restrict	No AMA	00702	035	900

Non-enhanced DA AMA

The Enhanced AMA capability is turned off by setting the ENHAMA field in table DABILL to N. Billable DA calls will receive structure codes 00724 or 00725 with a call code of 009. Non-billable calls receive the appropriate structure code (00700-00711) with the non-billable call code (035). Intercept calls receive structure code 00700 with the appropriate call code. The following table gives examples of the structure codes and call codes for the same call origination types shown in the previous table. For the examples shown, the ENHAMA field in table DABILL is set to N. The following table

shows only one call origination type (DABKEY column), but the data applies to all non-intercept DA call origination types.

Non-enhanced AMA Structure Code Example

DABKEY field	Class charge	Structure code	Call code	Service feature field
411 Station	Station Paid	00724	009	000
411 Station	Person Paid	00724	009	000
411 Coin	Person Collect	00724	009	001/004
411 Coin	Station Special Calling	00724	009	001/004
411 Hotel	Person Special Calling	00724	009	011
411 Hotel	Station Special Called	00724	009	011
411 Restrict	Person Special Called	00725	009	000
411 Restrict	No AMA	00702	035	000

Intercept Service

Intercept calls are calls placed to directory numbers that no longer exist (for example, service disconnected and change of directory number). The call is routed to an announcement or to an operator for further processing or for information on the called number. An Intercept call is a special type of DA call that receives a call origination type of INTC. If INTC calls are billed, it is usually as station calls at a flat rate in the office of the terminating number that has been placed on intercept.

The two types of Intercept calls are auto intercept and operator-handled intercept. Auto intercept calls are automatically routed to the DA System and are class charged as station paid (STA PD). No operator action is required.

TOPS Bellcore AMA (continued)

Operator-handled intercept calls lack the necessary information for routing to the DA System, and operator action is required. The operator must obtain any missing information before querying the DA data base. Since these calls are handled by an operator, the full range of class charges are supported.

Enhanced Intercept AMA

The Enhanced Intercept AMA capability is activated by setting the ENHAMA field of table DABILL to Y. All fields of the AMA record are populated as they were previous to BCS27 with the exception of the following five fields:

- AMA Record Field - Data in Field
- ORIG NPA - Intercepted NPA
- ORIG NUMBER - Intercepted number
- TERM NPA - Requested NPA
- TERM NUMBER - Requested number.

The following table shows examples of the structure codes and call codes generated with ENHAMA set to Y for a billable INTC call. In this table, entries for the DABKEY field represent the call origination type and service class as represented in table DABILL.

Enhanced Intercept AMA Structure Code Example

DABKEY field	Class charge	Structure code	Call code	Service feature field
INTC Station	Station Paid	00700	010	800
INTC Station	Person Paid	00700	016	800
INTC Station	Station Collect	00712	014	800
INTC Station	Person Collect	00712	017	800
INTC Station	Station Special Calling	00718	015	800
INTC Station	Person Special Calling	00718	018	800

Enhanced Intercept AMA Structure Code Example

DABKEY field	Class charge	Structure code	Call code	Service feature field
INTC Station	Station Special Called	00718	022	800
INTC Station	Person Special Called	00718	023	800
INTC Station	No AMA	00700	035	800

Non-enhanced Intercept AMA

If the ENHAMA field of table DABILL is set to N, billable calls with the call origination type of INTC use structure code 007XX and an appropriate call code for the class charge selected. There is no indication in the Service Feature field that the call is an Intercept call. Non-billable Intercept calls use structure code 007XX and call code 035.

The following table shows examples of the structure code and call codes generated for Intercept calls when the ENHAMA field is set to N.

Non-enhanced Intercept AMA Structure Code Example

DABKEY field	Class charge	Structure code	Call code	Service feature field
INTC Station	Station Paid	00700	010	000
INTC Station	Person Paid	00700	016	000
INTC Station	Station Collect	00712	014	000
INTC Station	Person Collect	00712	017	000
INTC Station	Station Special Calling	00718	015	000

TOPS Bellcore AMA (continued)

Non-enhanced Intercept AMA Structure Code Example

DABKEY field	Class charge	Structure code	Call code	Service feature field
INTC Station	Person Special Calling	00718	018	000
INTC Station	Station Special Called	00718	022	000
INTC Station	Person Special Called	00718	023	000
INTC Station	No AMA	00700	035	000

Surcharge

Effective with AF1152, Operating Companies have the option of applying a surcharge to semiautomatic DA calls that are completed. Semiautomatic DA calls are DA or Intercept calls that remain at a position after the requested information has been quoted, either verbally by the operator or by an ARU. The subscriber requests that the call be completed. The operator keys for TA service, thus completing the billing time for DA services. After reaching the TA display, the operator may make any billing adjustments and complete the call. The on-line rating capabilities of the switch impose a DA call completion surcharge.

The Call Completion Surcharge (CCSURCHG) field, a Yes/No field in table DABILL, provides the option of adding a call completion surcharge to the TA portion of a DA call. A Y in this field indicates that a DA surcharge will be added to the charges and indicated in the AMA record. For more information on CCSURCHG, see table DABILL in the data schema section of this document.

Table DACCSUR contains information necessary for adding the DA surcharge. This table is indexed by call completion type (AUTO or OH) and contains five fields (UNSPEC, STA, HOTEL, COIN, and REST) for indicating the surcharge amount (0 to 255 cents) for each DA service type. For AF1152, only semiautomatic call completion types are supported. Field UNSPEC is only accessible through the TOPS Rating Test Program. See the data schema section of this document for further information on this table.

The TOPS Rating Test Program tests the TOPS Rating System datafill of the Operating Company. Subcommand DA Call Completion (DCC) Type indicates whether DA call completion surcharges should be added to the call charges.

The Service Feature field in the AMA record indicates the application of surcharges. If field CCSURCHG in table DABILL is set to Y, the Service Feature field is populated with values for the DA call completion. If field CCSURCHG is set to N, no surcharges are added to the AMA record.

AL0420 - TOPS Call Code 009 for DA

This feature package does not introduce or modify any hardware.

Prior to AF1152, CAMA 411 DA calls that did not index table TOPS during translations, and for which DA service was not provided (these calls were forwarded to a DA center), generated AMA records with call code 006, structure code 00700; non-CAMA 411 DA calls received call codes and structure codes appropriate for the class charges of the calls. The AMA record indicated the Terminating NPA field as 00000C and the Terminating Number field as 0000411C.

With AL0420, Operating Companies have the option of generating AMA records with call code 009, structure code 00724, for CAMA 411 DA calls. These codes are only generated for calls that do not index table TOPS during translations and are forwarded to a DA center without DA services being provided by the TOPS operator. This call code and structure code combination is generated when office parameter TOPS_TANDEMED_411_CC009 of table OFCVAR is set to Y. When this parameter is set to N, CAMA 411 DA calls still generate AMA records with call code 006 and structure code 00700. For more information on the TOPS_TANDEMED_411_CC009 parameter, see the data schema section of this document.

This feature also modifies the AMA record Terminating NPA and Terminating Number fields for 411 DA calls. The Terminating NPA field of the AMA record contains 00XXXC (XXX is the NPA of the calling number) and the Terminating Number field contains 4110000C.

BR12829 - ONI Enhancement for Non-operator-Handled TOPS & CAMA Calls

Background

The AMA records for certain types of calls in the tandem environment do not presently have the Originating NPA and Originating Number fields populated. For example, an ONI call routed from the pretranslator with a T selector bypasses a TOPS position, thereby not allowing the collection of the calling

TOPS Bellcore AMA (continued)

number. Also, ONI TOPS Feature Group B calls (those dialed 950-1XXX, where XXX is a carrier number) that route to a NOSERVed carrier do not first route to a TOPS position, again disallowing the collection of the calling number.

Prior to BCS29 (TOPS calls)

For calls incoming on TOPS trunk groups without the calling number (ONI and ANIFAIL), the Originating NPA and Originating Number fields on the AMA record are filled as follows:

- If NPANXXRQ=Y on TOPS TRKGRP

  ORIG NPA =000C

  ORIG NUM=0NPANXXC (NPANXX from ACTUALBC field in first entry for the trunk group in table TOPSBC)

When NPANXX=Y, there is also an NPANXX display to the operator on ONI and ANIFAIL calls (derived from 1st entry for the CLLI in TOPSBC).

- If NPANXXRQ=N on TOPS TRKGRP

  ORIG NPA=000C

  ORIG NUM=0000000C

When NPANXXRQ=N, there is no NPANXX display to the operator on ONI and ANIFAIL calls.

The value of NPANXXRQ affects all ONI/ANIFAIL calls - those that go to TOPS and those that tandem through without operator intervention. The operator will overwrite the ORIG NUM with the actual 7 digit calling number on calls that go to TOPS.

Non-optional change with BCS29 (TOPS calls)

For calls incoming on TOPS trunk groups without the calling number (ONI and ANIFAIL), the Originating NPA and Originating Number fields on the AMA record are filled as follows:

- If NPANXXRQ=Y on TOPS TRKGRP

  ORIG NPA=NPA (NPA from ACTUALBC field in 1st entry for the CLLI in table TOPSBC)

  ORIG NUM=NXX0000C (NXX from ACTUALBC field in 1st entry for the CLLI in table TOPSBC)

When NPANXX=Y, there is also an NPANXX display to the operator on ONI and ANIFAIL calls (derived from 1st entry for the CLLI in TOPSBC).

- If NPANXXRQ=N on TOPS TRKGRP

  ORIG NPA=000C

  ORIG NUM=0000000C

When NPANXXRQ=N, there is no NPANXX display to the operator on ONI and ANIFAIL calls.

The value of NPANXXRQ affects all ONI/ANIFAIL calls - those that go to TOPS and those that tandem through without operator intervention. The operator will overwrite the ORIG NUM with the actual 7 digit calling number on calls that go to TOPS.

Prior to BCS29 (CAMA calls):

For calls incoming on SC trunk groups without the calling number (ONI and ANIFAIL), the Originating NPA and Originating Number fields on the AMA record are filled as follows:

ORIG NPA=000C

ORIG NUM=0000000C

Optional change with BCS29 (CAMA calls):

New office parameter RECORD_CLG_NPA_NXX is provided in table OFCVAR to allow the operating company to record the calling NPA and NXX on AMA.

If RECORD_CLG_NPA_NXX=DEFAULT_REC (default), the AMA fields for the originating number are not populated (same as prior to BCS29).

TOPS Bellcore AMA (continued)

If RECORD_CLG_NPA_NXX=CAMA_REC or TOPS_AND_CAMA_REC in a CAMA office, the AMA fields are filled as follows:

ORIG NPA=NPAC (NPA from ACTUALBC field in 1st entry for the CLLI in table BILLCODE).

ORIG NUM=NXX0000C (NXX from ACTUALBC field in 1st entry for the CLLI in table BILLCODE).

This new parameter appears in all offices with AMA in BCS29 and higher, but is only used in CAMA offices.

Verification Sequence

The following is the verification sequence:

- Make a TOPS ONI call originating on a TOPS trunk that is routed from pretranslations with a T selector. The Originating NPA field of the AMA record should contain the NPA of the first entry in table TOPSBC for that originating trunk group. The Originating Number field of the AMA record should contain the NXX of the first entry in table TOPSBC for that originating trunk group, followed by 0000 for the line number.
- Make an SC ONI call originating on a SC trunk that is routed from pretranslations with a T selector. The Originating NPA field of the AMA record should contain the NPA of the first entry in table BILLCODE for that originating trunk group. The Originating Number field of the AMA record should contain the NXX of the first entry in table BILLCODE for that originating trunk group, followed by 0000 for the line number.

Translations table flow

Table flow is not provided.

Limitations and restrictions

BR0634 - Bell (U.S.) AMA Format Compatibility

There are no limitations and restrictions applicable to this feature.

AF1152 - AMA for TOPS MP DA Calls

With Enhanced DA AMA, the ANSWER field is always set to 1 (UNANSWERED) in the AMA record. Since the ANSWER field indicates whether the call is billable, Regional Accounting Offices (RAOs) must take this field into account when processing TOPS DA AMA. Also, with Enhanced DA AMA, the ELAPSED TIME field contains only zeros.

Calls where the operator quotes the requested DA information from memory (i.e., frequently requested numbers) and calls canceled by the operator without

receiving any information can generate identical AMA records. Memory quote DA calls are calls where the subscriber requests directory information and the operator responds to that request from memory (recollection of numbers that are frequently requested). Therefore, when an operator cancels a DA call by keying CA CALL followed by POS RLS, a non-revenue call code of 035 is generated indicating that no DA service was provided.

AL0420 - TOPS Call Code 009 for DA

This feature does not affect 411 DA calls when TOPS provides the DA service.

If no calling NPA is present, only the Terminating Number field in the AMA record is changed.

This feature does not affect 411 DA calls marked as Tollfree in table SERVSCRN.

BR12829 - ONI Enhancements for Non-operator-Handled TOPS & CAMA Calls

This feature only applies to non-operator-handled calls that do not have a calling number and that originate on a TOPS or SC trunk.

The NPA and NXX taken from either table TOPSBC or BILLCODE may not necessarily be the true NPA and NXX of the calling number.

Interactions

The following paragraphs describe the interactions between TOPS Bellcore AMA and other functionalities.

BR0634 - Bell (U.S.) AMA Format Compatibility

This feature does not interact with any other features.

AF1152 - AMA for TOPS MP DA Calls

This feature is only available with the DA capability. The TOPS Service Billing feature is a prerequisite for the DA capability. The recording of billing information for all DA and Intercept calls handled by the DA package is affected by this feature.

The ability to apply a surcharge to semiautomatic DA calls that are completed is available. Semiautomatic DA calls are DA or Intercept calls that remain at a position after the requested information has been quoted, either verbally by the operator or by an ARU. The subscriber requests that the call be completed by the operator. The operator completes the proper keying action for TA service. This keying completes the billing time for DA services. After

TOPS Bellcore AMA (continued)

reaching the TA display, the operator may make any billing adjustments and complete the call.

AL0420 - TOPS Call Code 009 for DA

There are no interactions with other features by this feature.

BR12829 - ONI Enhancements for Non-operator-Handled TOPS & CAMA Calls

This feature interacts with all SC & TOPS calls using BellCORE AMA format. If package TOPS EBAF, OSB00101, is present, then this feature also interacts with it.

This feature requires package Incoming CAMA.

Activation/deactivation by the end user

TOPS Bellcore AMA requires no activation or deactivation by the end user.

Billing

Call codes and structure codes as described in this document are also applicable to phase 0 of Expanded Bellcore AMA Format (EBAF). EBAF implements the use of modules that are appended to AMA records. These modules contain additional call record information used for billing purposes. For ease of transition, EBAF is introduced in three phases. Through the use of tables, the phase of EBAF that is used can be set on a trunk group basis or for the entire office. Phase 0 of EBAF contains no modules. See TOPS EBAF, OSB00101, for a complete description of EBAF.

AF1152 - AMA for TOPS MP DA Calls

This feature adds values to the Service Feature field, the Operator Service Feature field, and the Inward Service Type field in the TOPS structure codes that are used for billing DA and Intercept Service calls. The fields that are affected and the structure code with which they are associated are as follows:

Structure code and field name

Structure code	Field name
00700 - 00729	Service Feature
00730	Operator Service Feature
00733	Inward Service Type
00734	Service Feature

TOPS Bellcore AMA (continued)

These fields have been updated to include values for DA, Intercept, and DA Call Completion services. Information in Table DABILL indicates whether calls using these services generate an AMA record.

The following list contain the field numbers and the valid entries for the Service Feature field as they appear in the AMA record. The field format is a 3-digit number followed by a delimiter (hex C).

Notes:

- All DA AMA records populate the ANSWER field with a value of 1 (unanswered). These calls should still be considered billable by the Operating Company.
- The ELAPSED TIME field contains only zeros.

Service feature field

Field value	Service rendered
000	Other
001	Prepay coin
002	Hotel/motel without tax
004	Postpay coin
005	Chargeable quotation
011	Hotel/motel with tax
800	Intercept other
900	DA other
901	DA prepay coin
902	DA hotel/motel without tax
904	DA postpay coin
911	DA hotel/motel with tax

The following list contain the field numbers and the valid entries for the Operator Service Feature field as they appear in the AMA record. The field

TOPS Bellcore AMA (continued)

format is a reserved field, followed by a 2-digit number, followed by a delimiter (hex C).

Operator service feature field

Field value	Service rendered
00	IC transfer
01	Dialing instructions
02	Emergency assistance
03	Rate information
04	Coin line identification
05	Trouble reporting
06	Credit recording
11	Directory assistance

The following list contain the field numbers and the valid entries for the Inward Service Type field as they appear in the AMA record. The field format is a 2-digit number followed by a delimiter (hex C).

Inward service type field

Field value	Service rendered
01	Dialing instructions
02	Emergency assistance
03	Completion assistance
04	Busy line verification
05	Operator emergency interrupt
06	Operator assistance calling card verification
07	Automated calling card verification
08	Directory assistance
09	Rate information

An example of an AMA record produced by a 0+555+1212 call from a station or unspecified line that is class charged as station paid and receives DA service is shown in the following figure. As shown, a structure code of 00700 and a service feature code of 900C have been assigned to this call. This indicates that this call is billed as "DA Other."

Example AMA record with service feature code of 900

```
HEX ID: AA  STRUCTURE CODE:00700C  CALL CODE:010C  SENSOR TYPE: 036C
SENSOR ID:0000000C   REC OFFICE TYPE:036C    REC OFFICE ID: 0000000C
DATE:60102C  TIMING IND:00000C    STUDY IND: 0200000C  ANSWER:1C
SERVICE OBSERVED:0C    OPER ACTION: 1C  SERVICE FEATURE:900C
ORIG NPA:613C    ORIG NUMBER: 2391234C  OVERSEAS IND:0C
TERM NPA:00212C    TERM NUMBER: 2201111C  CONNECT TIME:1445150C
ELAPSED TIME: 000000000C  OPERATOR NUMBER:1010111C
OPERATOR WORK TIME: 000000210C
```

AL0420 - TOPS call code 009 for DA

CAMA 411 DA Call Records

This feature provides the ability to generate an AMA record for CAMA 411 DA calls that do not index Table TOPS during translations and are forwarded to the DA center. These calls receive structure code 00724 and call code 009. If parameter TOPS_TANDEMED_411_CC009 in Table OFCVAR is set to Y, this structure code and call code are used.

The following figure shows an example of a CAMA 411 DA AMA record with a structure code of 00724 and a call code of 009.

Example AMA record for CAMA 411 DA call

```
HEX ID: AA  STRUCTURE CODE:00724C  CALL CODE:009C   SENSOR TYPE: 036C
SENSOR ID:0000000C    REC OFFICE TYPE: 036C  REC OFFICE ID:0000000C
 DATE: 60102C  TIMING IND:00000C    STUDY IND: 0200000C  ANSWER:0C
SERVICE OBSERVED:0C    OPER ACTION: 1C  SERVICE FEATURE:000C
ORIG NPA:613C    ORIG NUMBER: 2391234C  CONNECT TIME:1349490C
OPERATOR NUMBER: 0003101C  OPERATOR WORK TIME: 000000000C
```

411 DA call records

Prior to TOPS003, 411 DA call records could contain 0000411C in the Terminating Number field. The AMA record now has the NPA of the calling number contain the Terminating NPA field and the Terminating Number field contain 4110000C.

TOPS Bellcore AMA (continued)

If no calling NPA is present, only the Terminating Number field is modified in the AMA record. The following figure illustrates a non-CAMA 411 DA AMA record.

Example AMA record for non-CAMA 411 DA call

```
HEX ID: AA  STRUCTURE CODE:00700C  CALL CODE:010C
SENSOR TYPE: 036C  SENSOR ID:0000000C    REC OFFICE TYPE: 036C
REC OFFICE ID:0000000C    DATE: 60102C  TIMING IND:00000C
STUDY IND: 0200000C  ANSWER:0C  SERVICE OBSERVED:0C
OPER ACTION: 3C  SERVICE FEATURE:000C  ORIG NPA:613C
ORIG NUMBER: 2391234C  OVERSEAS IND:1C  TERM NPA:00613C
TERM NUMBER: 4110000C  CONNECT TIME:1349490C
ELAPSED TIME:000000030C  OPERATOR NUMBER:1010112C
OPERATOR WORK TIME:000000140C
```

Station Message Detail Recording

TOPS Bellcore AMA does not affect Station Message Detail Recording.

Datafilling office parameters

The following table shows the office parameters used by TOPS Bellcore AMA. For more information about office parameters, refer to *Office Parameters Reference Manual.*

Office parameters used by TOPS Bellcore AMA

Table name	Parameter name	Explanation and action
OFCVAR	TOPS_ TANDEMED_411_ CC009	This parameter (a Yes/No parameter) determines whether CAMA (1+DD, ONI, or ANIF) 411 DA calls that do not index table TOPS during translations and that are forwarded to a DA center receive call code 009 and structure code 724. If this parameter is set to N, this option is disabled. The default value for this parameter is N. This parameter requires one word of data store.
OFCVAR	RECORD_CLG_ NPA_NXX	This parameter, along with certain attributes of the call, determines if this feature modifies the Originating NPA and Originating Number fields of the AMA record. This feature is in effect when: • Parameter RECORD_CLG_NPA_NXX has value other than DEFAULT_REC • The call originates on a TOPS or SC trunk • The call is not handled by an operator • No calling number is present The parameter values specify the types of calls for modification of the Originating NPA and Number fields of the AMA record as follows: • DEFAULT_REC - Default value. No modification allowed on any call. • TOPS_REC - Modify on TOPS-handled calls. • CAMA_REC - Modify on CAMA-Handled calls. • TOPS_AND_CAMA_REC - Modify on TOPS and CAMA-Handled calls.

CAUTION

Possible loss of revenue

Loss of revenue can result from incorrect setting of parameter RECORD_CLG_NPA_NXX due to wrong AMA records.

TOPS Bellcore AMA (continued)

Datafill sequence

The following table lists the tables that require datafill to implement TOPS Bellcore AMA. The tables are listed in the order in which they are to be datafilled.

Datafill tables required for TOPS Bellcore AMA

Table	Purpose of table
TOPSTRBL	TOPS Operator Reporting Trouble Disposition table datafills the capability to generate a report for operator-suspected fraud and coin credit.
CHGADJKY	TOPS Equal Access Charge Adjust Key table maps the charge adjust codes entered by the operator to a type of charge adjust, namely coin credit, part charge, or walkaway.
DABILL	Table DABILL specifies call types that are billable.
DACCSUR	DA Call Completion Surcharge

Datafilling table TOPSTRBL

The TOPS Operator Reporting Trouble Disposition (TOPSTRBL) table allows generation of a report for operator-suspected fraud and coin credit, walkaway, and the number of occurrences for credit adjustment as well as the amount of adjustment.

Datafilling table CHGADJKY

The TOPS Equal Access Charge Adjust Key (CHGADJKY) table maps the codes entered by the operator for a type of charge adjust, namely coin credit, part charge, or walkaway to a reason.

Datafilling table DABILL

Table DABILL specifies call types that are billable. The following table shows the datafill specific to TOPS Bellcore AMA for table DABILL. Only those

fields that apply directly to TOPS Bellcore AMA are shown. For a description of the other fields, refer to the data schema section of this document.

Datafilling table DABILL

Field	Subfield or refinement	Entry	Explanation and action
ENHAMA		N or Y	Data field ENHAMA sets the enhanced DA AMA capability on or off. If the ENHAMA field is set to Y, calls are appropriately identified in the structure code as DA or Intercept.
CCSURCHG		N or Y	Field CCSURCHG indicates whether a surcharge will be applied to the AMA record for DA and Intercept calls.

Datafill example for table DABILL

The following example shows sample datafill for table DABILL.

MAP display example for table DABILL

```
DABKEY   REQNUM   CLGREQ   SERVNAME    ENHAMA   CCSURCHG    DACC
_____________________________________________________________
411 UNSPEC  Y        Y    LOCALDA      Y          N        OH
411 STATION Y        Y    LOCALDA      Y          N        ALL
411 HOTEL   Y        Y    LOCALDA      N          N        NONE
555 UNSPEC  N        N    TOLLFREE     Y          N        NONE
555 COIN    N        N    TOLLFREE     Y          Y        NONE
```

Datafilling table DACCSUR

Table DACCSUR provides the capability to apply the surcharge based on the originating class of service such as station, hotel, coin, or restricted. This allows applying a surcharge to calls originated as DA but completed as TA.

Datafill example for table DACCSUR

The following example shows sample datafill for table DACCSUR.

MAP display example for table DACCSUR

```
CCTYPE    UNSPEC    STA    HOTEL    COIN    REST
_____________________________________________________
 AUTO       0         0      25       25       0
```

TOPS Bellcore AMA (end)

Translation verification tools

TOPS Bellcore AMA does not use translation verification tools.

SERVORD

TOPS Bellcore AMA does not use SERVORD.

TOPS Call Processing Features (Administration)

Ordering codes

Functional group ordering code: OSB00101

Functionality ordering code: not applicable

Release applicability

TOPS15 and up

Prerequisites

To operate, TOPS Call Processing Features (Administration) requires the following:

- Functionality BAS Generic, BAS00003
- Table TOPSFTR paramter TOPS_ON_OFF_SWITCH = Y

Description

This document describes the administration segment of the TOPS Call Processing feature package, including information on TOPS operational measurements, verification scrambling, TOPS Automatic Message Accounting (AMA), routing options during AMA failure, control of delay calls, interposition transfer, and real-time enhancements. Also included are any changes to TOPS base software, and details of TOPS interactions with external applications such as Mechanized Calling Card Service (MCCS) and Automatic Alternate Billing Service (AABS).

The administration portion of this feature package contains the following features:

Feature numbers and names

Feature number	Feature name
AF0075	TOPS OM Enhancements
AF0145	TOPS OM Enhancements - Phase II
BV1347	TOPS Verification Scrambling and Tone Options
BV1345	TOPS AMA Records Verification
BR0413	AMA Record of Specified Unanswered Call Types
BR0475	AMA Failure Routing Options
BV1343	TOPS Key Function Enhancements

TOPS Call Processing Features (Administration) (continued)

Feature numbers and names

Feature number	Feature name
BR0405	Delay Call Denial
BR0338	Expanded Operator Display
BV0245	Interposition Transfer
AF0146	TOPS Real-Time Enhancements
none	Outgoing Trunk Key Enhancements
AF1076	TOPS Base MMI Changes Enhancements
AF1427	TOPS Base MMI Modification
AF1784	TOPS Base Changes - BCS28
AF1527	TOPS Data and Voice Link Utilities
none	ORDB Impact on Operator Numbers
AF2372	SA Logon
CH02884	Discrepancy in AOP Results
BR21462	Increase OPR ID Range
BK01001	Add Office Parameter to Control Nil OPRID on AMA
UV100477	? in the CLG Field on CAMA/RCAMA Call
BK01973	Revisit TOPS PPMBUFFS Utilization
none	Datafilling TOPS positions and devices
59006865	EOL Notification and EOL of TOPS ACD (TOPS12)

Following is a brief overview of the administrative features described in this document.

AF0075 - TOPS OM Enhancements

AF0075 provides a consistent approach to the pegging of the Office Traffic Summary (OFZ) operational measurements group and improves the measuring of TOPS traffic. Two OM groups have been added to improve the measuring of TOPS traffic.

TOPS Call Processing Features (Administration) (continued)

AF0145 - TOPS OM Enhancements - Phase II

AF0145 continues the work begun in AF0075. This feature provides an OM group to measure traffic on a host/remote basis in a host/standalone OC office, and updates the activity report. The Call Disposition Summary Report is also updated to reflect the changes made to TOPS OM groups.

BV1347 — TOPS Verification Scrambling and Tone Options

Feature BV1347 scrambles speech on line verification attempts to ensure the privacy of subscribers.

BV1345 — TOPS AMA Record Verification

Feature BV1345 generates an AMA billing record for each line verification made by an operator.

BR0413 — AMA Record of Specified Unanswered Call Types

Feature BR0413 allows the Operating Company to specify by call type which unanswered calls are recorded on AMA tape.

BR0475 — AMA Failure Routing Options

Feature BR0475 provides routing options that can be used for toll calls if AMA should fail.

BV1343 — TOPS Key Function Enhancements

Feature BV1343 reduces the instances of incorrect billing information being recorded on AMA.

BR0405 — Delay Call Denial

Feature BR0405 allows the Operating Company to control operator-originated delay calls.

BR0338 — Expanded Operator Display

Feature BR0338 allows the Operating Company to assign instructional displays to appear at the Operator Position CRT.

BV0245 — Interposition Transfer

Feature BV0245 allows the Operating Company to set up positions to accept specific call types. These positions are datafilled as transfer positions.

TOPS Call Processing Features (Administration) (continued)

AF0146 - TOPS Real-Time Enhancements

Feature AF0146 enhances the system real-time performance of TOPS calls in an operator centralization (OC) environment or in a non-OC environment. Brief descriptions of the implications of AF0146 follow:

- The Start Timing (ST TMG) and the Position Release (POS RLS) key functions are now consolidated. This consolidation eliminates one operator keystroke (ST TMG) during most TOPS call handling.
- An Operating Company can eliminate delayed outpulsing for plus-dialed calls that arrive at an Operator Position. This enhancement eliminates one keystroke (RLS FWD) during regular operator call handling and two keystrokes (RLS FWD, START) during operator call handling that involves common channel interoffice signaling (CCIS) queries.

  Refer to “Optional elimination of delayed outpulsing" for more information.
- Dial rate calls are automatically class charged as station paid calls. This enhancement eliminates one operator keystroke (STA PD) and one separate screen update message (STA PD).
- Zenith or 800 calls are automatically class charged as automatic collect calls. This enhancement eliminates one operator keystroke (AUTO COL) and one separate screen update message (AUTO COL).
- Efficient message structuring reduces the number of messages used for screen updates. These messages pass between the central controller and the TOPS positions.

All of these enhancements reduce the messaging between central control and an Operator Position and decrease the overall processing time for each call.

AF1076 - TOPS Base MMI Changes Enhancements

Feature AF1076 modifies two TOPS tables and one force management (FM) command:

- The TOPS position (TOPSPOS) table now includes the service profile of each assistance, in-charge, and Operator Position.
- The force administration and data system (FADS) operator transfer capabilities command now provides data on all operators in a toll office (TO), including non-transfer operators.

AF1427 - TOPS Base MMI Modification

Feature AF1427 describes changes made to the OPRTRANS table in AF1121 of feature TOPS AWT Enhancements, OSB00101. The key field entry TOPSLINE of the OPRTRANS table is changed to SPLVFY. This field controls routing of third number authorization calls.

TOPS Call Processing Features (Administration) (continued)

AF1784 - TOPS Base Changes - BCS28

Feature AF1784 modifies the base TOPS software to accommodate services supported by TOPS MP. The changes made by this feature are as follows:

- Tables TOPSPOS, OPRDAT, and SERVICES are modified to allow the Operating Company to identify intercept calls.
- The SERVICE field is added to table TOPS. This field determines the service type of the call, before it is enqueued, based on call origination. The possible service types are TASERV, DASERV, and INTCSERV. This information allows greater queuing flexibility.
- Tables TOPSPOS and TOPSDEV are expanded to accommodate the TOPS Message Switch.
- MCCS is modified to route a subscriber to an operator when the subscriber dials 11 or 12 following the bong tone.
- Tables TRKGRP, BCCODES, and SERVICES are modified to accommodate the Extended Bellcore AMA Format (EBAF).

AF1527 - TOPS Data and Voice Link Utilities

Feature AF1527 allows the DMS switch to select the voice and data connections necessary to link the DMS switch with a voice service node (VSN). Applications such as Automatic Alternate Billing Service (AABS) require VSNs.

Feature AF1527 provides the following:

- For voice links, this feature provides the trunk group type TOPSVL to define the voice links to external applications such as AABS.
- For data links, this feature provides the TOPS Virtual Node Inventory (TOPSVNIN) table to define the protocol and data link details for a given application (e.g., AABS).

ORDB Impact on Operator Numbers

Operator Reference Database (ORDB) is an interface to TOPS MP.

Potential new revenue generating services that the Operating Company may implement via ORDB include weather forecasts for travelers, pay-per-view television, product information/ordering, and special hotel/coin services.

There are no DMS translations required to route to ORDB. Operators can have immediate access to the database when the software package is added to the DMS and the TPC loads are updated to include the ORDB interface. If an Operating Company has ordered the ORDB software, it is added to the DMS and TPC loads via NT processes.

TOPS Call Processing Features (Administration) (continued)

Multiple TOPS MP sites can access a single ORDB. However, ORDB requires unique TOPS position numbers for identification. The database does not recognize or differentiate between TOPS operator offices and/or traffic offices (teams).

Therefore, existing operator numbers may have to be modified so that each operator with access to the same ORDB has a unique number assigned. This may in turn require an increase in table OFCENG parameter TOPS_MAX_OPERATOR_NUMBER. See *Office Parameters Reference Manual* for information on changing this parameter. Operator numbers are assigned via force management, and stored in table OPRDAT in a standalone TOPS switch or TOPS OC host.

AF2372 — SA Login

Feature SA Login adds security to TOPS MP SA positions by requiring TOPS MP assistants and in-charge operators to logon. This optionally includes DAS logon and password control.

Feature SA Login also implements a new version of DAS logon for assistants and in-charge positions controlled through the TPC.

BR21462 - Increase OPR ID Range

This feature affects tables OPRDAT and OPRCMPLX and office parameter TOPS_MAX_OPERATOR_NUM. The maximum operator number is increased from 3099 to 9999. However, if the office is DMS-250, then the operator number range is 4095 and an operator number of 0 may not be assigned.

Due to the increase in range, the NIL operator number used in EBAF AMA is now 9999 instead of 3101. Refer to AF1726 (TOPS EBAF, OSB00101).

BK01001 - Add Office Parameter to Control Nil OPRID on AMA

This PRSDOC allows the Operating Company to set the nil operator identification value recorded on AMA to 3101 or 9999. New office parameter TOPS_EXPANDED_OPRNUM is provided to control which value is to be used. Refer to BR21462 (Increase OPR ID range) in this package description for information on the current range of operator numbers.

UV100477 - ? in the CLG Field on CAMA/RCAMA Call

Prior to this PRSDOC, when TOPS trunk group field NPANXXRQ (NPA-NXX required) was set to Y and a calling number was not available (e.g., an ANI failure call), a default NPA-NXX was taken from table TOPSBC and displayed at the TOPS position at call arrival. With this PRSDOC, ONI/ANI fail calls that arrive at a TOPS MP position for the collection of the

calling number no longer display the default NPA-NXX, even if field NPANXXRQ is set to Y.

BK01973 - Revisit TOPS PPMBUFFS Utilization

This PRSDOC changes calculation of office parameter PPMBUFFS for TOPS position maintenance.

Prior to this activity, TOPS potentially required a large number of PPMBUFFS during unexpected and severe facility failures. Depending on system scheduling, TOPS position maintenance processes were in contention for PPMBUFFS.

TOPS position maintenance has been modified so that only one process that utilizes two buffers is forced to make the buffers available before another process attempts to use them.

In addition to trunk maintenance, diagnostics also require buffers. The maximum number that is required for TOPS diagnostics is ten.

Datafilling TOPS Positions and Devices

Datafill guidelines are provided.

Operation

This section describes the theory of operation for the features in this package.

AF0145 - TOPS OM Enhancements - Phase II

Tables OCOFC and OCGRP

The Operator Centralization Office (OCOFC) table matches an office name to a number so that field OFCNAME can be used as a key into table OCGRP. Each OC office name must be entered in the OCOFC table before it can be referenced elsewhere.

The Operator Centralization Group (OCGRP) table identifies the remote office(s) that the host is serving. It also identifies the voice and data links between the host and the remote office(s).

MAP display example for table OCOFC

```
VALUE                SYMBOL
_____________________________
1                    BRONREM
```

TOPS Call Processing Features (Administration) (continued)

MAP display example for table OCGRP

```
OFFICE       VLGRP      DLOVRLAY
_____________________________________________
BRONREM      TOPSOCLOOPO      HDLC       REMDL
```

BV1347 — TOPS Verification Scrambling and Tone Options

BV1347 allows an operator to connect to a call in progress either to verify that the line is busy (as opposed to being out of service) or to reach a subscriber whose line is busy in an emergency.

BV1347 scrambles speech on line verification attempts to ensure the privacy of subscribers. This feature provides the following capabilities:

- Scrambles the speech on line verification attempts
- Sends alert tones when an operator breaks in on a line

The scrambler circuit is provided as a pair of trunks, an outgoing trunk connected to the operator and an incoming trunk connected to the required end office. The actual voice scrambler and its control circuitry connects the outgoing trunk to the incoming trunk in a loop-around configuration as shown in the following figure.

When an operator prepares to break in on a line, the TOPS_VERIFICATION_BARGE_IN parameter is set to SCRAMBLE. This setting causes a wink to be sent to the outgoing trunk on the scrambler circuit.

When the scrambler circuit receives the wink, it removes the scrambler from the voice path. Once the scrambler is removed from the voice path, a warning tone is transmitted to the verified party. The warning tone is repeated every 10 seconds as long as the connection lasts.

The scrambler circuit can pass switch-hook supervision and multifrequency (MF) signals so that the outgoing side of the scrambler circuit is selected as the trunk on verification attempts and the forward connection is handled as a new call under the control of the trunk to trunk call processing software. Refer to the following figure for an illustration of this configuration.

TOPS Call Processing Features (Administration) (continued)

Configuration with scrambler circuit

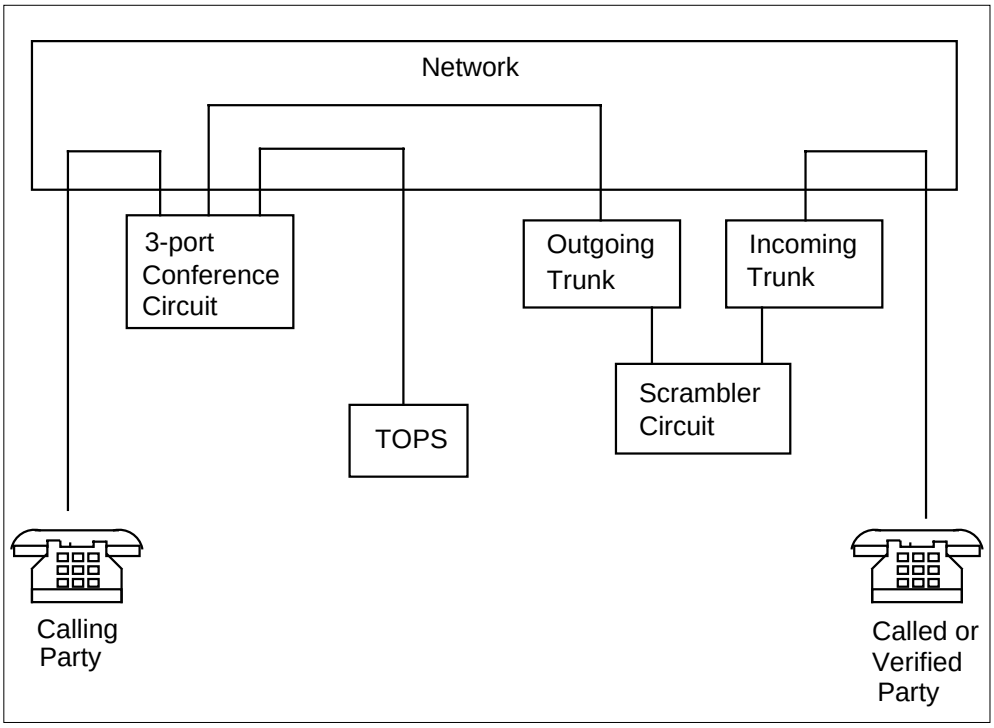

Office parameter

The TOPS_VERIFICATION_BARGE_IN (see *Office Parameters Reference Manual*,) parameter specifies which one of three methods of verification is to be used when an operator verifies a number. The valid entries for this parameter are BARGE_IN, SCRAMBLE, and MONITOR. The default value for this parameter is MONITOR.

If a voice connection to the party being verified is established (keying sequence KP VFY + DIGITS + START), the parameter is set to BARGE_IN. When this parameter is set to BARGE_IN, the scrambler circuit cannot be used.

If a voice connection to the party being verified is not established until the operator keys in KY VFY + START after setting up the connection, the parameter is set to MONITOR. When this parameter is set to MONITOR, the scrambler circuit cannot be used.

If a voice connection to the party being verified is not established after the operator sets up the connection and a wink is sent to the scrambler circuit, the parameter is set to SCRAMBLE. When this parameter is set to SCRAMBLE, the scrambler circuit is required.

TOPS Call Processing Features (Administration) (continued)

BV1345 — TOPS-AMA Records Verification

BV1345 generates an AMA billing record for each line verification made by an operator. The AMA billing record generated by this feature includes all those fields listed in the following table.

Fields in the F1 and the F3 AMA billing records

F1 billing record	F3 billing record
record code	record code
entry code	entry code
Information Digit 1-2	Information Digit 1-2
calling number	calling number
called number	called number
n/a	extra DDO digit
event Information Digit	event Information Digit
start day	start day
start time	start time
elapsed time	elapsed time
operator number	operator number
team number	team number
Information Digit 3-4	Information Digit 3-4
Information Digit 5-6	Information Digit 5-6
origination type	origination type

The AMA billing records are in Northern Telecom (NT) format. An F1 AMA billing record is generated when a line verification is done by an operator. When a line verification results in a connection to the party being verified (calling number), an F3 AMA billing record is generated. The F1 and F3 AMA billing records are the same except for the one additional field in the F3 AMA billing record (shown in the previous exhibit).

The F1 and F3 AMA billing records are distinguished from other AMA billing records in that they are never chargeable.

TOPS Call Processing Features (Administration) (continued)

BR0413 — AMA Record of Specified Unanswered Call Types

BR0413 allows the Operating Company to specify by call type which unanswered calls are recorded on AMA tape.

Prior to this feature, either all unanswered calls were recorded or none were recorded. The NO_ANS_CALLS_ONTAPE parameter could either be set to YES or NO. When the parameter was set to YES, all unanswered calls were recorded on AMA tape. When the parameter was set to NO, no unanswered calls were recorded.

This feature does not eliminate the NO_ANS_CALLS_ONTAPE, rather it creates a table, TOPSAMA, that works in conjunction with the NO_ANS_CALLS_ONTAPE parameter.

With this feature, if the parameter is set to YES, all unanswered calls are recorded. If the parameter is set to NO, the only unanswered calls that are recorded are those set to YES in table TOPSAMA. If both the parameter and the entry in the table are set to NO, then no unanswered calls are recorded. Refer to datafill procedure section for the default values for the TOPSAMA table.

The calls are entered on AMA tape when the calling party goes on-hook.

Recording unanswered calls is useful for testing the AMA system and for general statistics.

Table TOPSAMA

The TOPSAMA table allows the Operating Company to specify which calls are recorded. The following exhibit lists the fields and the valid entries for this table.

TOPSAMA table fields

Field	Entry	Explanation
CO	Any one of the entries listed in the following datafill example.	Call Origination Type. This field identifies the type of unanswered calls that could be recorded on AMA tape.

TOPS Call Processing Features (Administration) (continued)

TOPSAMA table fields

Field	Entry	Explanation
TOT	00-99	TOPS Origination Type Code. This field identifies the call type recorded. Refer to the following table for a definition of each code.
RECNOANS	Y or N	Record No Answer. This field specifies whether or not an unanswered call is recorded on AMA tape. If N is entered, unanswered calls are not recorded. If Y is entered, unanswered calls are recorded.

Entry codes

Entry code	Call type
00	Station Paid DDD
01	Station Paid LCDR
02-07	Reserved for Special Features
08	TWX
09	DATA
10-15	Reserved for Special Features
16	Time Message Rate
17	Untimed Message Rate
18	Detailed Message Rate
19	Conference Trunk Usage
20	Station Paid Operator Assisted
21	Station Collect
22	Station Special Calling
23	Person Paid
24	Person Collect
25	Person Special Calling
26	Auto Collect

TOPS Call Processing Features (Administration) (continued)

Entry codes

Entry code	Call type
27	Station Special Called
28	Person Special Called
29	Person Call Back (PCB)
30	PCB Special Billing
31-39	Not Used
40	*Station Paid DDO
41-55	Reserved for Special Features
56	Not Used
57	Not Used
58-59	Reserved for Possible Future Use
60	*Station Paid Operator Assisted
61	*Station Collect
62	*Station Special Calling
63	*Person Paid
64	*Person Collect
65	*Person Special Calling
66	*Not Used
67	*Station Special Called
68	*Person Special Called
69	*Person Call Back (PCB)
70	*PCB Special Billing
71-79	Not Used
80	INWATS - Measured Time
81-83	Reserved for Possible Future Use

TOPS Call Processing Features (Administration) (continued)

Entry codes

Entry code	Call type
84-89	Not Used
90	Used by LAMA Initial Extension Entry
91-95	Not Used
96	Unspecified (default)
97	Cancelled Call (Domestic)
98	Cancelled Call (Overseas)
99	AMA Test Call
	* Indicates International Dialing

Datafill Example - Table TOPSAMA

When a software load is built for an office, the TOPSAMA table is filled with the default values listed as follows:

TOPS Call Processing Features (Administration) (continued)

MAP display example for table TOPSAMA

CO	TOT	RECNOANS
UNSPEC	00	N
OH	03	N
OA	02	N
DD	01	N
CAMA	01	N
RCAMA	04	N
DELAY	70	N
121	10	N
131	20	N
141	08	N
151	00	N
161	00	N
171	00	N
181	30	N
191	00	N
555	90	N
1150	40	N
1151	00	N
1152	42	N
1153	07	N
1154	00	N
1155	50	N
1156	60	N
1157	00	N
1158	62	N
1159	63	N

TOPS Call Processing Features (Administration) (continued)

MAP display example for table TOPSAMA (continued)

CO	TOT	RECNOANS
1160	00	N
1161	00	N
1162	00	N
TS	03	N
TSUB	03	N
APS	03	N
ALM	05	N
INTC	06	N
211	00	N
311	00	N
411	89	N
511	00	N
611	00	N
711	00	N
811	00	N
911	00	N
MOBILE	09	N
SPARE1	00	N
SPARE2	00	N
SPARE3	00	N
SPARE4	00	N
SPARE5	00	N
SPARE6	00	N

BR0475 — AMA Failure Routing Options

BR0475 provides the Operating Company routing options that can be used for toll calls during AMA failure.

The AMA system records billing details of all chargeable calls to a device (tape or disk). All the information associated with a call is recorded onto a call condense block (CCB). When the call ends, the billing information is copied from the CCB to a recording unit extension block. The recording unit extension block is then detached from the CCB and placed in the EXT queue.

The AMA process periodically checks the EXT queue. If the EXT queue is not empty, the data in the EXT queue is formatted and stored in a 2048 byte buffer. When the buffer is full, the billing information is written to an AMA device.

TOPS Call Processing Features (Administration) (continued)

While the recording of billing information, as described in the previous paragraphs, one of the following events might occur:

- There is not an AMA device available for recording the billing information.
- There is not a recording unit extension block available for recording the billing information.
- The AMA process is trapped due to a software error, in which case, a warm restart is required to recover the system.

Prior to this feature, if any of the above events occurred, it results in toll calls being routed free of charge. But with this feature, the Operating Company can specify how toll calls should be treated in the event of AMA failure.

With this feature the Operating Company can do one of the following during AMA failure:

- Route the call to an announcement or a tone
- Route the call free of charge
- Route the call to a TOPS position

The time a call originates has a great impact on the effectiveness of the routing options offered by this feature. The following figure illustrates how calls are handled depending on the time of origination.

Timing of calls on the effectiveness of the routing options

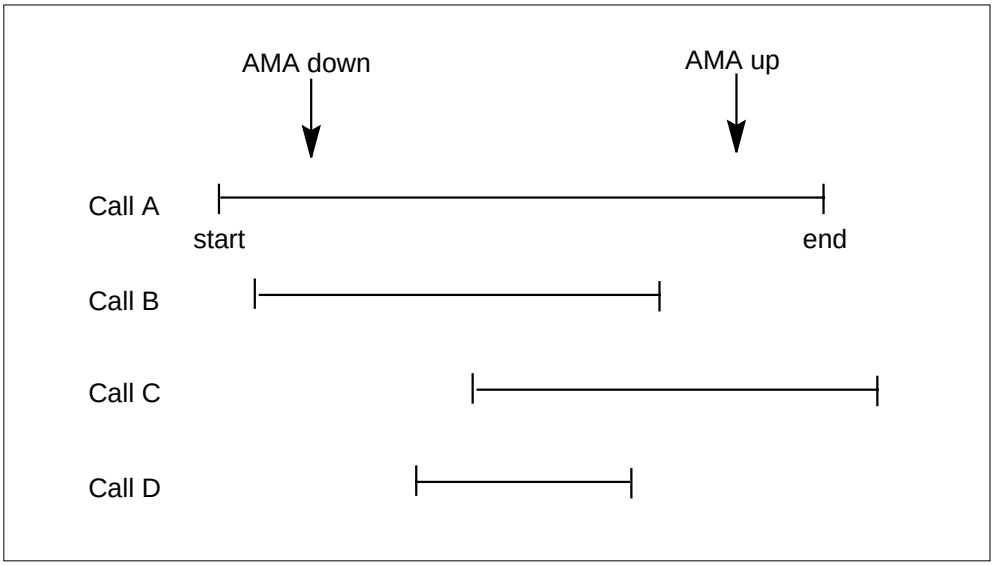

TOPS Call Processing Features (Administration) (continued)

In the previous figure, calls A through D are handled as follows:

- Call A is not affected by the AMA failure because it originated before AMA failed and terminated after AMA was recovered.
- Call B is routed free of charge since the call terminated before AMA was recovered.
- Call C is not routed free of charge since AMA was recovered before the call terminated. Billing information is collected at the end of the call and the call is charged.
- Call D is routed free of charge since it originated and terminated while AMA was still down.

The options of routing the calls to a tone, to an announcement, or to a TOPS operator can be applied to calls C and D only.

Note: This feature applies to DMS-100, DMS-100/200, and DMS-200 offices.

What follows are explanations and illustrations of the different routing options during AMA failure for different office configurations.

DMS-100 or DMS-100/200 Offices

When AMA is operating normally, a call comes into the office, billing information is collected using local automatic message accounting (LAMA), and the call is outpulsed.

When AMA fails one of the following three actions can be taken (see the following figure):

- The call is routed as described in the previous paragraph. In this case, the call is routed free of charge and the AMAFREE register is pegged.
- The call is routed to an announcement or a tone. The calling party must redial the call at a later time.
- The call is routed to a TOPS operator where billing information is collected using centralized automatic message accounting (CAMA). The call is then outpulsed.

Note: When the free of charge option is chosen, AMA should still be checked at the end of the call. If at the end of the call AMA still is not available, the CCB is released and the AMAFREE register is pegged.

TOPS Call Processing Features (Administration) (continued)

Possible events after AMA failure in DMS-100 Office

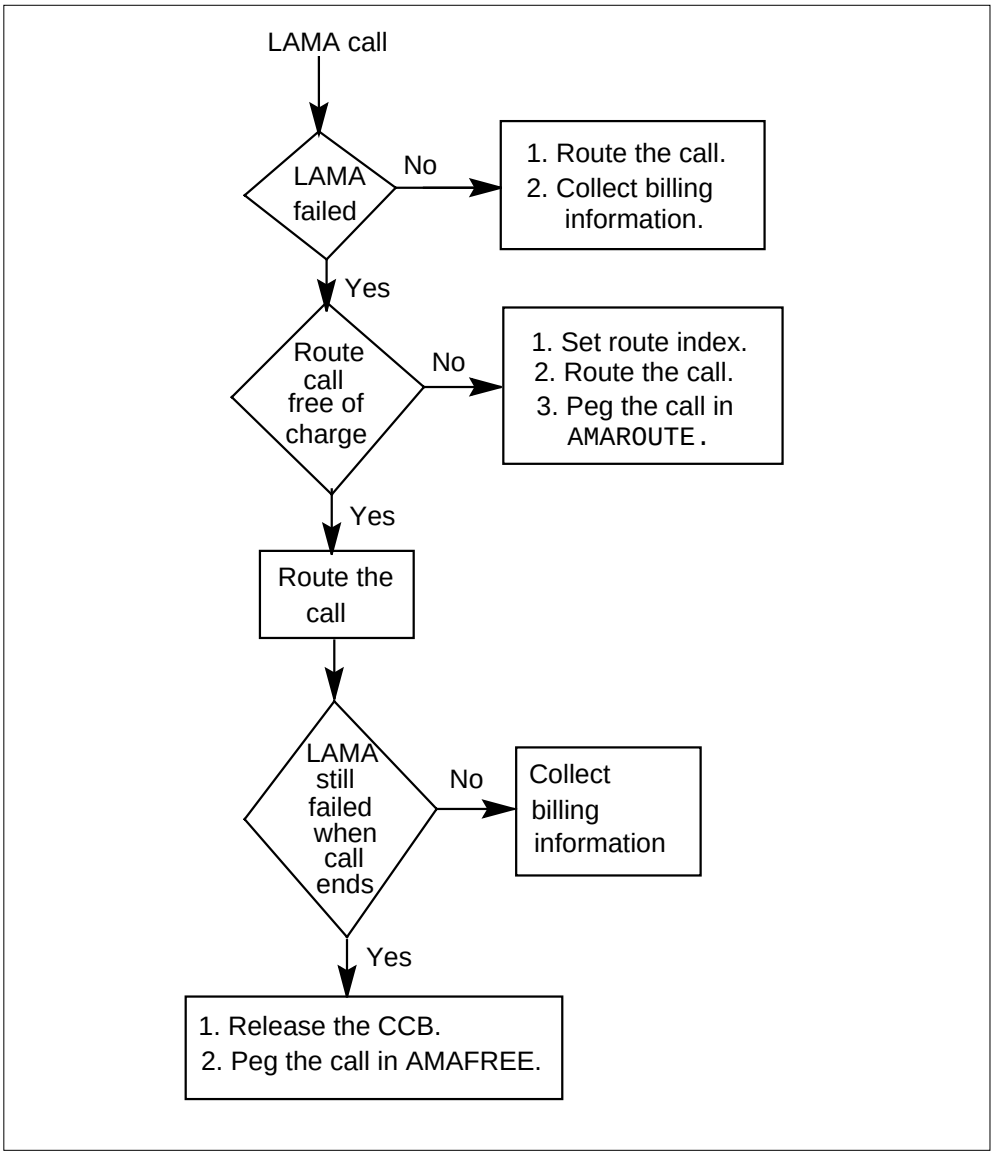

DMS-200 Offices

When AMA is operating normally, a call comes into the office, billing information is collected using centralized automatic message accounting (CAMA), and the call is outpulsed.

TOPS Call Processing Features (Administration) (continued)

When AMA fails, one of three actions can be taken (see the following figure):

- The call is routed as described in the previous paragraph. In this case, the call is routed free of charge and the AMAFREE register is pegged.
- The call is routed to an announcement or a tone. The calling party must redial the call at a later time.
- The call is routed to a TOPS operator where billing information is collected using CAMA. The call is then outpulsed.

Note: The DMS-200 office must be equipped with the 4x-package to route a call to TOPS after an AMA failure at a DMS-200 office. The 4x-package in not required if the calls are routed to an announcement, to a tone, or free of charge.

Once the call is routed to TOPS after CAMA failure, it is handled in the following way:

- TOPS attempts to get a CAMA TOPS recording unit before collecting the calling digits. If the recording unit is not available, the call is blocked and routed to a treatment.
- TOPS routes the call free of charge if there is not an AMA device available or if the AMA process is dead.

When a CAMA TOPS recording unit is not available, the AMAROUTE register is pegged. When there is not an AMA device or the AMA process is dead, the AMAFREE register is pegged.

TOPS Call Processing Features (Administration) (continued)

Possible events after AMA failure in DMS-200 office

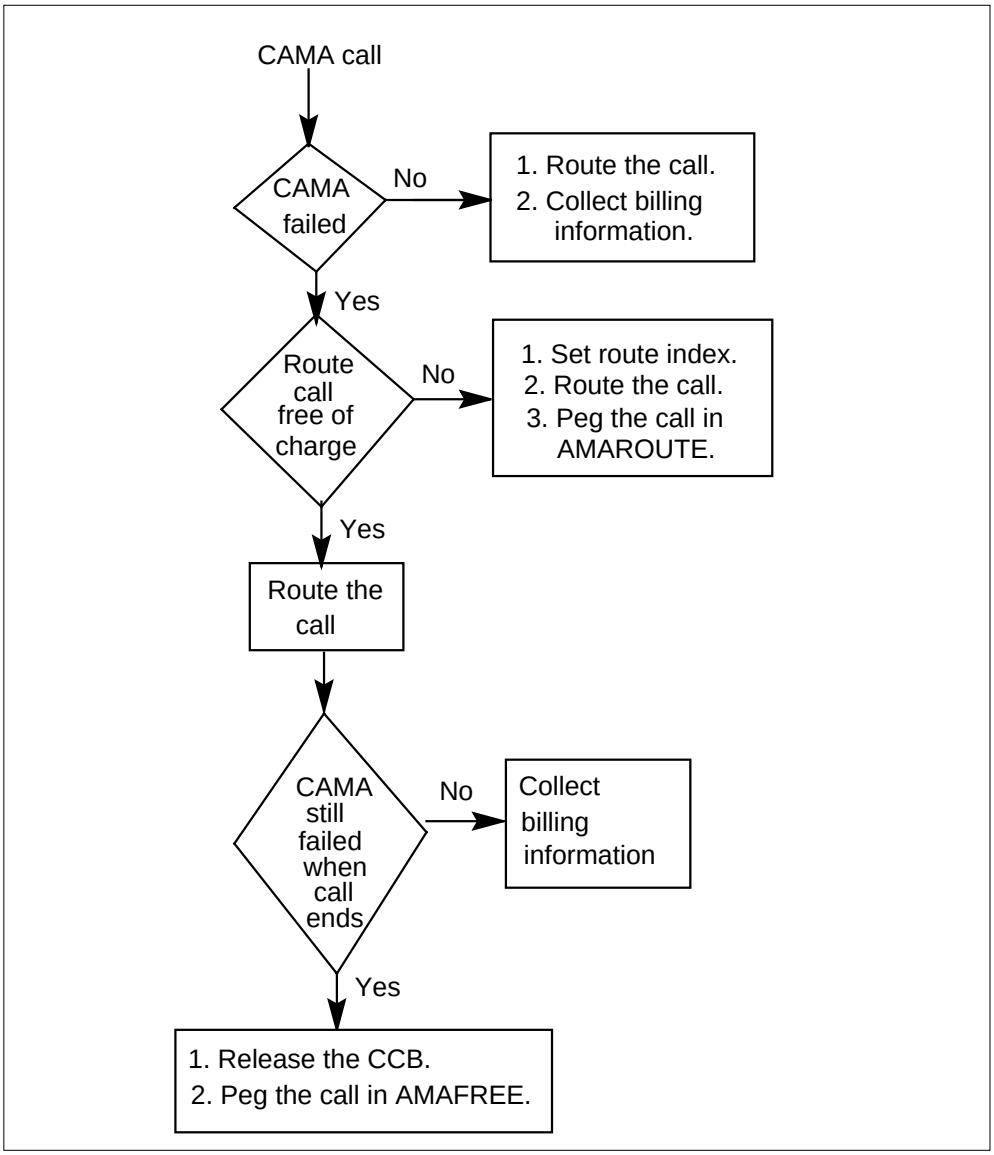

Office parameters

The route options under AMA failure are set up by two parameters: AMA_FAILURE_FREE_CALL and AMA_FAILURE_ROUTE_POSITION.

- AMA_FAILURE_FREE_CALL - The valid entries for this parameter are N and Y. If the parameter is set to Y, all toll calls (CAMA and LAMA) are routed free of charge and all TOPS calls are blocked when AMA failure occurs. If the parameter is set to N, all toll calls are routed to a route

TOPS Call Processing Features (Administration) (continued)

position in the POSITION table. Refer to *Office Parameters Reference Manual*, for more information on this parameter.

- AMA_FAILURE_ROUTE_POSITION - The valid entry for this parameter is POSITION. When AMA_FAILURE_FREE_CALL is set to N, this parameter is accessed. When this parameter is accessed, the calls are routed to the POSITION table when AMA fail occurs. The F2475 feature adds the AMAFAIL position to the POSITION table. The AMAFAIL position is datafilled with an office route reference index. The office route reference index refers the calls to a route list in the OFRT table. The route list is defined by the Operating Company. Refer to *Office Parameters Reference Manual*, for more information on this parameter.

Table POSITION

F2475 adds the AMAFAIL position to the POSITION table. Calls are routed to the AMAFAIL position when AMA failure occurs.

This position is required if the AMA_FAILURE_FREE_CALL parameter is set to N. The AMAFAIL position specifies the office route to which all calls are routed during AMA failure.

MAP display example for table POSITION

```
POS                    PRTE
_____________________________
AMAFAIL   T  OFRT   21
```

AMAFAIL is the type of position, T is the route selector that routes calls to the OFRT table and 21 is the route reference index of the route list in the OFRT table. Refer to *Office Parameters Reference Manual*, for complete details on the POSITION table.

Note: When the selector T is specified, OFRT must be datafilled also.

BV1343 — TOPS Key Function Enhancements

Feature BV1343 reduces the instances of incorrect billing information recorded on an AMA device (tape or disk). Prior to BV1343, the billing information for a call was recorded as it appeared in the TOPS recording unit at the end of the call. Since the operator has the ability to change the billing number during the call, the number recorded in the TOPS recording unit might not accurately reflect the parties involved.

TOPS Call Processing Features (Administration) (continued)

This feature reduces incorrect billing by doing the following:

- Preventing the operator from changing a number that is involved in a chargeable call.
- Recording on the AMA device and on an AMAB log report when a number is changed and the number entered is not involved in the connection.

Preventing the operator from changing a number is accomplished by redefining the results of some keying sequences at the TOPS position. The changes to these keys are designed to reduce the instances of changing a number when it is not necessary. Key function changes are broken into two groups: those that modify the backward connection (calling number) and those that modify the forward connection (called number).

Backward connection (calling number)

The calling number cannot be changed on a successful call. A calling number entered but never connected can be changed. The calling number for an automatic number identification (ANI) fail call and an operator number identification (ONI) call can be changed at any time and more than once if necessary.

Forward connection (called number)

The called number cannot be entered after the back connection is broken. Also, the called number can never be changed. Establishing a different called number and/or overwriting a called number are still permitted under certain conditions.

Overwriting conditions on called numbers

It is sometimes necessary to overwrite a possible called billing number, e.g., entering a valid forward number over an operator code. In such cases where the called billing number must be overwritten, the following restrictions apply to reduce the possibility of error.

On domestic calls, overwriting a forward number is always permitted but is recorded if the overwritten number is or has been involved in a network connection and the new number is never involved in a network connection. As soon as the new number is involved in a connection and the forward number recorded is the same as the forward number connected, then the need to save the previous number vanishes. The cases that are important to record are those where the forward number recorded is different from the forward number connected; in other words, the forward number recorded is never outpulsed. When overwriting takes place, at most only one extra forward number needs to be saved in any one call. If all numbers entered are at some point outpulsed, there is no need to save the numbers.

TOPS Call Processing Features (Administration) (continued)

On overseas calls, overwriting of a connected forward number is allowed if both the numbers have the same country code or if the number overwritten is an operator code only. Recording of overwrites is handled the same as for domestic calls.

Overwriting of a forward number is recorded using forced AMA entries. The extra AMA entries are in Northern Telecom (NT) format. On domestic calls, the record code is F1. On overseas calls, the record code is F3. The F1 and F3 records always follow the initial AMA record for the call and are marked as no charge. The extra entry contains data prior to the overwrite activity and indicates that the number was never connected. The last number that was connected is saved in the no-charge entry.

There can only be one overwrite AMA entry per call. Information Digit 3 indicates the extra overwrite entry. Information indicated by Information Digit 3 is as follows:

Meaning of Information Digit 3

MEANING	VALUES							
	0	1	2	3	4	5	6	7
No Connection	N	Y	N	Y	N	Y	N	Y
Verification Request	N	N	Y	Y	N	N	Y	Y
Validity Check Failure or Security	N	N	N	N	Y	Y	Y	Y

In the previous exhibit, the values 4 through 7 indicate either a validity check failure or an overwrite event. In both cases an extra AMA record is generated. The validity check failure requires an E0 extension entry record after the F1 or the F3 record. The E0 extension entry record distinguishes a validity check failure from a security failure.

Note: If overwriting takes place sometime during the call, Information Digit 3 indicates a security failure in the chargeable AMA record whether or not a non-chargeable AMA record follows.

BR0405 — Delay Call Denial

BR0405 allows the Operating Company to control operator-originated backward connections (delay calls).

With this feature, the Operating Company can do one of the following:

- prevent all delay calls
- prevent certain delay calls (based upon the beginning digits of the directory number)
- permit all delay calls.

In order to offer these capabilities, the DELAY option has been added to the KEY field of the OPRTRANS table. Refer to datafill procedure section for complete details on the DELAY option and the OPRTRANS table.

Table OPRTRANS

The Operator Translations (OPRTRANS) table contains the information required to select the applicable table for translations of digits dialed by an operator for normal, verification, delay, MCCS sequence, and overseas calls.

This table can be used with the standard pretranslator table to allow the Operating Company to control operator originated delay calls (backward connections). The Operating Company can prevent all delay calls, prevent certain delay calls based on the beginning digits dialed, or permit all delay calls. These three functions use the standard pretranslator table that allows the Operating Company to specify treatments of delay calls.

When a delay call is initiated, the TOPS software looks into table OPRTRANS, option DELAY, and uses the pretranslator name and screening class specified in that tuple to determine the treatment of the delay call. Refer to F7151 - TOPS Base MMI Modifications for a description of the OPRTRANS table.

BR0338 — Expanded Operator Display

BR0338 allows the Operating Company to assign special instructional displays to appear at the Operator Position CRT. The instructional displays are based on the incoming TOPS trunk group.

The DISPLAY field of the TRKGRP table points to the required display in the TOPSDISP table. The instructional display is a maximum of six characters and appears following the CLG NUMBER display on the Operator Position CRT.

This feature is used for different applications. For example, the larger Operating Companies use this feature to identify the subscribers of those independent Operating Companies for which they provide operator service. When a subscriber of an independent Operating Company connects to the operator, the operator knows that this is a subscriber of the independent

TOPS Call Processing Features (Administration) (continued)

Operating Company via the display that appears following the calling number. It is up to the Operating Company to decide what this display will be. In the above example, the display is usually the abbreviated name of the independent Operating Company.

Tables TRKGRP and TOPSDISP

The DISPLAY field in the TRKGRP table points to the appropriate instructional display in the TOPSDISP table. The valid entries for the DISPLAY field are 0 through 31. The following exhibit lists the fields in the TOPSDISP table.

Fields in the TOPSDISP table

Field	Entry	Explanation
DISP_NO	1-31	DISPLAY NUMBER. This is the instructional display number pointed to by the DISPLAY field in the TRKGRP table.
INSTRUCT	alphanumeric	INSTRUCTIONAL DATA. This field contains the instructional display that appears on the TOPS screen display after the CLG NUMBER display.

In the following datafill example, all the fields in the TRKGRP table are displayed. The datafill is shown as it appears when output by the switch. The only field in the TRKGRP table directly related to the F2338 - Expanded Operator Display feature is the DISPLAY field.

The following exhibit shows how the TOPS TRKGRP table can be set up.

MAP display example for table TOPS TRKGRP

```
GRPKEY                              GRPINFO
_____________________________________________________________
TOPCOMAMF
TOPS 0 NPDGP NCRT IC MIDL 919 TOP1 NLCA NSCR Y SP
COMBINED
  Y Y 3  BELL  10  2  2
```

The three (3) in the following example references the display number (field DISP_NO) in the TOPSDISP table.

MAP display example for table TOPSDISP

```
DISP_NO                    INSTRUCT
_____________________________________
   1                        XXXXXX
   2                        YYYYYY
   3                        ZZZZZZ
```

BV0245 — Interposition Transfer

BV0245 allows calls to be routed or transferred to specific operators who are assigned to accept calls from the transfer queues.

A call can be placed in a transfer queue in the following ways:

- A call can be placed in the transfer queue by an operator. To do this, the operator presses the appropriate transfer key at the Operator Position keyboard.
- A call can be placed directly in the transfer queue by the software.

One application of the call transfer feature is for calls requiring bilingual operators. When a position is set up as a transfer position, all calls requiring language assistance are transferred to that position. When a call requiring language assistance arrives at the TOPS office, the operator to whom the call initially came transfers the call by pressing one of the transfer keys and position release.

Another example of an application for this feature is directory assistance (DA). If a position is set up to be a DA position, a call can be routed directly to that position. The call is placed in the transfer queue by the software. This is done based on the call type. Refer to datafill procedure section in this document for details on datafilling a transfer position.

When the operator transfers a call, the call can be transferred at any point except the following:

- If there is a forward connection
- After pressing the ST TMG key
- After pressing the CA CALL key
- If the call is a CAMA call. (CAMA calls can only access a general position or go to a transfer position based on trunk group type. Refer to the Call

TOPS Call Processing Features (Administration) (continued)

Processing for details on routing calls to a transfer position based on trunk group type.)

- If the transfer feature is not active.

Once the call has been transferred to a transfer operator, the transfer operator can complete the call.

If the operator transfers a call to a transfer operator that is not logged in, the call goes into the queue and the sound alert tone sounds at the force management and in-charge positions.

An operator can also transfer a call to an assistance position, but the assistance position cannot complete the call. The call must be returned to the operator for completion. When a call is transferred to an assistance position, it must first be placed on hold. If a call is not placed on hold before transferring to the assistance position, the call is dropped when the service assistant attempts to return the call to the operator.

Table TOPSPOS

The TOPS Position (TOPSPOS) table lists the positions that require two trunk circuits (one voice, one data), and identifies the trunk circuit locations. The In-Charge, Assistance, and Operator Positions are assigned in this table. When assigning the Operator Positions, specify the types of calls that the position handles (general, transfer one, or transfer two). This table also lists the Traffic Office number to which the position belongs.

BCS28 Changes for Table TOPSPOS

The following table lists the BCS28 changes for table TOPSPOS.

Note: The changes related to TMS and Intercept Service are not supported in BCS28. They are supported in a future BCS.

Changes to table TOPSPOS in BCS28

Field	Description of change
PMTYPE	now includes TMS as a valid PM type.
SVCSET	now includes Intercept Service (INTCSERV) as a valid service type. This field defines the set of services that the position may handle.
VCCKT	now includes TMS as a valid voice circuit.
If PMTYPE is TMS, the following subfields apply:	

TOPS Call Processing Features (Administration) (continued)

Changes to table TOPSPOS in BCS28

Field	Description of change
TMSNO	specifies the TMS on which the voice circuit exists. The range of values is 0-255.
TMSCKTNO	specifies the p-side port number of the voice circuit. The range of values is 0-19.
TMSCKTTS	specifies the channel number of the voice circuit. The range of values is 1-24.
CNTRLR	is now a selector field, and also includes TMSTPC as a valid controller type. If CNTRLR is NT4X71 or TPC, the fields DTCKT, DTGRP, and PROTOCOL are subfields of CNTRLR.
If CNTRLR is TMSTPC, the following subfields apply:	
TPCNO	specifies the TPC number. The range of values is 0-254.
MPNO	specifies the HSLI card on the TPC to which the TOPS MP is configured. These cards are numbered from left to right on a TPC shelf. The range of values is 0-3.

MAP display example for table TOPSPOS

```
POSNO
      VCCKT  VCPDGRP  CARDCODE
                    POSAREA
                CNTRLR
_____________________________________________________________
100
     TM8    0  24   NPDGRP    2X722A
               OPR 1 TASERV $ GEN XFR1 XFR2 $
NT4X71   TM8     0 25 NPDGRP   BELL108
101
     TM8    0  26   NPDGRP    2X722A
                     IC 1 TASERV $
NT4X71  TM8    0 27 NPDGRP   BELL108
312
     DTC 0  3  13   NPDGRP    DS1SIG
                    OPR 2 TASERV $ XFR2 $
NT4X71   DTC 0   3 14 NPDGRP   BELL202
```

TOPS Call Processing Features (Administration) (continued)

Table TOPS

In BCS28, the SERVTYP field is expanded to include INTCSERV as a valid service type. This entry produces an error message in BCS28 (INTC CAPABILITY NOT PROVIDED) but is supported in a future BCS.

The Digit Translation Routing to TOPS (TOPS) table is used by TOPS when translation of dialed digits from another data table points to the TOPS table. The TOPS table lists the following information for each call recognized by TOPS:

- the string be displayed on the Operator Position screen to identify the call type
- whether the call is to be recorded on AMA tape
- the service type for each call origination type.

If a position was datafilled to accept 411 local Directory Assistance calls, the following happens. Assume that digits 411 arrive over an incoming TOPS trunk group type with the station class field set to COMBINED. ANI SPILL allows TOPS to determine that this is a call from a non-coin station with ANI and the call type is Direct Dialed (DD).

Translations of the dialed digits, 411, follow. Tables TRKMEM, TRKSGRP, TRKGRP, TOPSBG, and STDPRT are accessed. When this is completed, translation points to the HNPACONT.HNPACODE subtable. The datafill looks as follows:

MAP display example for subtable HNPACONT.HNPACODE

```
FROMDIGS        TODIGS        CDRRTMT      LONGHAUL
_____________________________________________________
  411             411          SCD3 64         N
```

Code type SCD3 tells the DMS switch that 411 is a local service code and is to be allowed if the number of digits is 3 and the origination source is local. Translation proceeds to tables LCASCRCN, PFXTREAT and CLSVSCRC. When this is completed, translation points to the route reference index in subtable HNPACONT.RTEREF. The data for HNPACONT.RTEREF looks as follows:

TOPS Call Processing Features (Administration) (continued)

MAP display example for subtable HNPACONT.RTEREF

```
RTE                          RTELIST
_____________________________________
64                     T  TOPS  411
```

This datafill points to table TOPS at index key 411, which looks as follows:

MAP display example for table TOPS

```
CO   SEL      HEADER      NOAMA      POSTYPE    SERVTYP
_____________________________________________________
411   C         DA          N          XFR1      TASERV
```

This connects the caller to a position that is datafilled in the TOPSPOS table, field XFRSET, and that has a XFR1 position and display DA for Directory Assistance on the Operator Position CRT.

Table OPRDAT

The TOPS Operator Data (OPRDAT) table lists all the operator numbers that have been assigned. Only operators with a number listed in this table can log in to a TOPS position. This table determines whether an operator can accept transfer calls.

AF0146 — TOPS Real-Time Enhancements

AF0146 provides the following enhancements:

- consolidation of ST TMG and POS RLS key functions
- automatic class charging of dial rate calls
- automatic class charging of 800 and Zenith calls
- optimization of screen update messages
- outgoing trunk key enhancements

The following paragraphs describe the enhancements that affect translations and billing.

Automatic class charging of dial rate calls

AF0146 allows dial rate calls to be automatically class charged as station paid calls. A dial rate call is a call that could have been completed automatically by the TOPS equipment, but it was completed instead at an Operator Position. In this case, the charge for the call is calculated as if the subscriber had dialed the call directly without operator assistance.

TOPS Call Processing Features (Administration) (continued)

Automatic class charging of 800 and Zenith calls

AF0146 allows 800 and Zenith calls to be automatically class charged as automatic collect calls. An automatic collect call is paid for by the called party, not by the calling party.

If no class charge key is pressed and outpulsing of the call is initiated, 800 and Zenith calls are automatically class charged as automatic collect calls and AUTO COL is displayed in the charge class field of the Operator Position CRT. The called number is also displayed.

The dialing string for an 800 number is 800+7 digits. The dialing string for a Zenith number is 800+5 digits, where the 5 digits constitute either the entire Zenith number or 0 plus a 4-digit Zenith number.

AF1076 — TOPS Base MMI Changes Enhancements

AF1076 provides the following enhancements:

- combined service profile
- combined transfer profile

Combined service profile

AF1076 adds the service set (SVCSET) field to the TOPS operator data (OPRDAT) table and to the TOPS position (TOPSPOS) table. In the OPRDAT table, the SVCSET field specifies the type of service(s) the operator can provide, e.g., toll and assistance. In the TOPSPOS table, the SVCSET field specifies the type of service(s) the position can handle, e.g., toll and assistance.

When an operator logs on to a position, the service set of that operator is overlaid with the service set of that position, determining the types of services that the operator can provide once a call has arrived at the position. The merging of the service profiles of the operator and the position create a combined service profile. For more information, refer to *TOPS MP Force Management Guide*, and *TOPS MPX Force Management Guide*.

Combined transfer profile

Because of AF1076, the operator transfer capabilities command (X) can now be used to list the transfer profiles of all operators in a traffic office (TO). Prior to BCS25, this command could be used only to list the transfer profiles of the transfer operators.

In the OPRDAT table, each operator logon number is assigned

The combined transfer profile determines the transfer queue(s) from which a specific operator, who is logged on to a specific position, can receive calls. For

more information, refer to *TOPS MP Force Management Guide*, and *TOPS MPX Force Management Guide*.

Office Parameters

F7151 changes the office parameters TOPS_NUM_RU and TOPS_NUM_CAMA_RU in table OFCENG.

- TOPS_NUM_RU - This parameter specifies the quantity of TOPS Recording Units (RUs) required for recording call information. This office parameter size has increased by six words to a total of 107 words.
- TOPS_NUM_CAMA_RU - This parameter specifies the quantity of CAMA/TOPS RUs required for recording call information. This office parameter size has increased by five words to a total of 69 words.

Table OPRTRANS

Table OPRTRANS contains a fixed number of tuples with fixed keys. The key field entry TOPSLINE is changed to SPLVFY to control the routing of third number authorization calls that use the Special Verify AWT Enhancement feature in feature package AWT Enhancments. The SPLVFY entry is only used by the system if feature package AWT Enhancements is active. This tuple is visible to the Operating Company whether or not AWT Enhancements is part of the software load or not. See TOPS AWT Enhancments for more information on this table.

The following figure is an example datafill for table OPRTRANS. Effective with this feature, the key field TOPSLINE is replaced with SPLVFY.

MAP display example for table OPRTRANS

KEY	SNPA	SCRNCL	PRTNM	LCANAME
OPERATOR	613	NSCR	OPER	NLCA
VERIFY	613	NSCR	OPVE	NLCA
SPLVFY	518	NSCR	NPRT	NLCA
DELAY	613	NSCR	BACK	NLCA
MCCS	518	NSCR	NPRT	NLCA

AF1427 — TOPS Base MMI Modification

The Special Verify AWT Enhancement feature changes the TOPS BASE MMI table OPRTRANS. The key field entry TOPSLINE is renamed SPLVFY and routes calls through the Special Verify AWT Enhancement feature. Changes to the table OPRTRANS are visible to the Operating Company regardless of the presence of the AWT Enhancements feature package in the software load, but the SPLVFY entry is not used by the system unless AF1121 is active in the

TOPS Call Processing Features (Administration) (continued)

office. Refer to AWT Enhancements for more information regarding the Special Verify AWT Enhancement feature.

AF1784 — TOPS Base Changes-BCS28

AF1784 changes some base TOPS software to accommodate services supported by TOPS MP. The changes include the following:

- modifications to and expansion of data tables
- modifications to Mechanized Calling Card Service (MCCS)
- modification to TOPS queuing
- ability to assign priorities to queues

Data tables modifications

The following data tables have been modified:

- TOPSPOS
- OPRDAT
- SERVICES
- TOPS
- TOPSDEV
- TRKGRP
- BCCODES

The TOPSPOS, OPRDAT, and SERVICES tables are expanded to allow the Operating Company to identify intercept calls as such. In addition, the TOPSPOS table is expanded to include the TOPS Message Switch (TMS) as a valid peripheral to which the TPC can connect. The TOPSDEV table is also expanded to include TMS.

A field called SERVICE is added to the TOPS table. This field identifies the service type of a call based on call origination. This information allows greater flexibility in the queuing of calls.

The TRKGRP, BCCODES, and SERVICES tables are expanded to include Extended Bellcore AMA Format (EBAF).

MCCS modifications

The Automatic Alternate Billing Service is a TOPS capability allowing automation of collect and third number billed calls in addition to calling card calls. With AABS, operators can key DTMF digit 11 to choose collect billing and 12 to choose third number billing for 0+ calls. AABS uses a bong tone as

the initial prompt for subscriber input, followed by prompts describing the service options.

The Mechanized Calling Card Service also uses a bong tone as the initial prompt for subscriber input. The announcements that follow the initial prompts are different for AABS and MCCS, but if the subscriber provides DTMF input immediately after the bong tone, no announcements are given.

Because MCCS and AABS use the same bong tone as the initial prompt, subscribers may be using MCCS when they think they are using AABS. This could happen if MCCS is used as backup service when AABS is overloaded, or if a subscriber tries to place an AABS call in an area where AABS is not provided. That is, a subscriber can enter 11 or 12 when connected to MCCS.

MCCS recognizes DTMF digits 11 and 12, and sends those calls immediately to a TOPS operator where the collect and third number billing types are supported. The subscriber does not hear any error announcements. The operator does not receive any indication of billing type, so the operator has to ask the subscriber for the type of billing desired.

Table TOPS

Following is a call flow example that accesses table TOPS.

If a position was datafilled to accept 411 local Directory Assistance calls, the following happens. Assume that digits 411 arrive over an incoming TOPS trunk group type with the station class field set to COMBINED. ANI SPILL allows TOPS to determine that this is a call from a non-coin station with ANI and the call type is Direct Dialed (DD).

Translations of the dialed digits, 411, follows. Tables TRKMEM, TRKSGRP, TRKGRP, TOPSBG, and STDPRT are accessed. When this is completed, translation points to the HNPACONT.HNPACODE subtable.

The following example shows sample datafill for table HNPACONT.HNPACODE.

MAP display example for table HNPACONT.HNPACODE

```
FROMDIGS        TODIGS        CDRRTMT       LONGHAUL
-------------------------------------------------------
411             411           SCD3 64          N
```

Code type SCD3 tells the DMS switch that 411 is a local service code and is to be allowed if the number of digits is 3 and the origination source is local.

TOPS Call Processing Features (Administration) (continued)

Translation proceeds to tables LCASCRCN, PFXTREAT and CLSVSCRC. When this is completed translation points to the route reference index in Subtable HNPACONT.RTEREF. The data for HNPACONT.RTEREF looks as follows:

MAP display example for table HNPACONT.RTEREF

```
RTE                          RTELIST
_______________________________________
64                      T  TOPS  411
```

This datafill points to table TOPS at index key 411, which looks as follows:

MAP display example for table TOPS

```
CO   SEL      HEADER      NOAMA      POSTYPE    SERVTYP
_____________________________________________________
411   C          DA          N          XFR1      TASERV
```

This connects the caller to a position that is datafilled in the TOPSPOS table.

Table SERVICES

The SERVICES table allows the Operating Company to identify the vendor servicing their Directory Assistance (DA) calls.

Prior to this feature, DA and Intercept capabilities existed as a single service: DA service. This feature breaks them into two distinct services by adding a tuple to the SERVICES table. This tuple specifies the vendor and the data link type that service intercept calls.

The following table summarizes the BCS28 changes to table SERVICES.

Changes to table SERVICES in BCS28

Field	Description of change
INDEX	range of values is now 1-3, to include Intercept service.
SERVICE	range of values now includes INTCSERV.
LSDBID	range of values is 0-9999. This field is a refinement for DASERV and INTCSERV, and specifies the listing services database identifier used by the DASERV and INTCSERV. The value INTCSERV cannot be datafilled in table SERVICES in BCS28; it is enabled in a future software release.

TOPS Call Processing Features (Administration) (continued)

Datafill Example - Table SERVICES

The following figure is an example datafill for table SERVICES.

MAP display example for table SERVICES

```
INDEX            SERVDATA
_____________________________
   1      TASERV
   2      DASERV CCI MPC 2138
```

Table TOPSDEV

The following table summarizes the BCS28 changes for table TOPSDEV.

Changes to table TOPSDEV in BCS28

Field	Description of change
CNTRLR	is now a selector field. The range of values now includes TMSTPC. TMSTPC cannot be datafilled in BCS28; it is enabled in a future software release.
MEMVAR	is now a subfield of field CNTRLR if CNTRLR is TPC or NT4X71
CARDCODE	is now a subfield of field CNTRLR if CNTRLR is TPC of NT4X71
PROTOCOL	is now a subfield of field CNTRLR if CNTRLR is TPC or NT4X71
TPCNO	is a subfield of CNTRLR if CNTRLR is TMSTPC. The range is 0-256.
MPNO	is a subfield of CNTRLR if CNTRLR is TMSTPC. The range is 0-3.

Table TRKGRP(RONI)

The following table summarizes the BCS28 changes for table TRKGRP(RONI).

Changes to table TRKGRP(RONI) in BCS28

Field	Description of change
NBECID	range of values is 0-9999. This field specifies the non-BOC Exchange Carrier identification associated with the RONI calls originating on the trunk.
SNPA	range of values is all valid SNPAs. This field specifies the Serving Numbering Plan Area associated with the RONI calls originating on the trunk.

TOPS Call Processing Features (Administration) (continued)

Table BCCODES

As of BCS28, there are 14 additional call codes that can be entered in table BCCODES. These are the call codes used by TOPS Expanded Bellcore AMA Format (EBAF).

AF1527 — TOPS Data and Voice Link Utilities

Features such as Mechanized Calling Card Service (MCCS) and Automatic Coin Toll Service (ACTS) provide automated operator services. The Automatic Alternate Billing System is another automatic operator assistance feature. Like MCCS, AABS provides automated completion of calling card calls. Additionally, AABS can automate collect and third number billing calls using voice recognition and prompts to communicate with the third party.

Voice Service Nodes, connected to the DMS switch by both voice and data links, are an integral part of AABS. AF1527 allows the DMS switch to identify and select those voice and data links. The voice links are outgoing trunk members of type TOPSVL, and the data links are supplied via the MPC data link utility.

For voice links, this feature provides the trunk group type TOPSVL. For data links, this feature provides table TOPSVNIN.

Voice and Data Link Configurations

The following figure shows two VSNs connected to a DMS-200 with both voice and data links.

TOPS Call Processing Features (Administration) (continued)

Sample VSN configuration

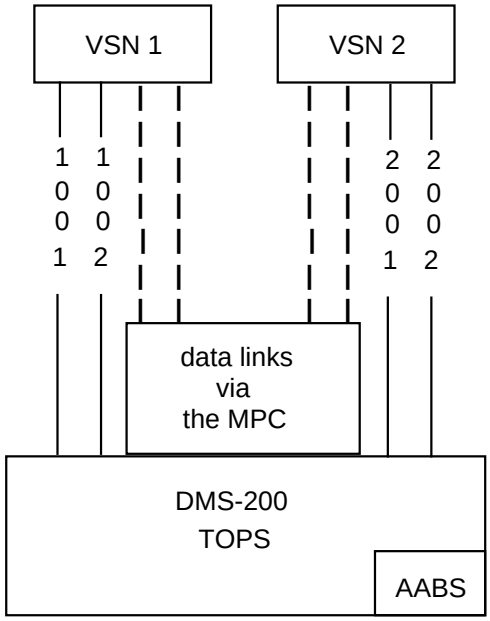

All voice links to the VSNs are outgoing trunks of type TOPSVL.

Data links that connect to the same VSN constitute a link set.

If one of the links in a link set fails, messaging is switched to another link in the same link set. Either the DMS or the VSN can switch the messaging to another link.

Messaging over the MPC data links is called conversation. Each conversation between the DMS switch and the VSN takes place on a unique logical link called an MLC. An MLC is composed of the MPC number, the Link number, and the Conversation number. In the diagram at the left, the two data links connected to VSN 1 are MLCs (1,2,1) and (2,2,1); the data links to VSN 2 are MLCs (3,2,1) and (4,2,1).

Key:

——— voice link (trunk group of type TOPSVL) with trunk member numbers indicated

– – – – data link (MLC)

Trunk Group Type TOPSVL

The voice links between the DMS switch and the VSN enable the VSN to hear tones and voice from the calling and called parties. Also, the VSN uses the voice links to play announcements for the calling and called parties. This feature implements a trunk group type, TOPSVL, that defines voice links to external applications; AABS is the first such application to use these trunks.

TOPS Call Processing Features (Administration) (continued)

Trunks of type TOPSVL have the following characteristics:

- their selection sequence in the TRKGRP table must be set to MIDL because the DMS switch selects voice links on a “most idle" basis
- they are outgoing circuits
- they require nonstandard supervision and signaling, i.e., the DMS switch does not have to seize the trunk and wait for a return wink before using that trunk
- their pulse type in the TRKGRP table must be set to No Pulse (NP) because the DMS switch does not outpulse over TOPSVL trunks
- their start signal must be set to immediate (IM) in table TRKGRP
- their remote make busy (RMB) field in the TRKGRP table must be set to yes (Y).

This last characteristic relates to voice link selection. If the VSN detects an error condition on the trunk, the VSN goes off-hook towards the DMS switch on that trunk. Because the RMB field associated with that trunk is set to Y, the DMS switch does not choose that particular trunk to serve as a voice link to the VSN. The DMS switch continues searching for the most idle trunk member connected to the VSN. Unlike CLLI names (which should be unique for each application) the trunk group type TOPSVL is available for use in future TOPS applications.

All the voice links in the previous figure are TOPSVL trunks. Following is example datafill.

MAP display example for table TRKGRP

```
CLLI       GRPTYP   TRAFSNO    PADGRP   NCCLS   SELSEQ
_____________________________________________________
VSNTRNK    TOPSVL      31      NPDGP     NCRT    MIDL
```

Table TOPS Virtual Node Inventory (TOPSVNIN)

The TOPSVNIN table provides another mapping function. This table maps a particular application to its associated messaging software and data link hardware. The DMS switch indexes the table with the name of the application, and the table returns the name of the protocol and the name of the data link utility the application uses. For BCS28, the only application supported is AABS. Following is example datafill.

MAP display example for table TOPSVNIN

```
KEY   APPLN   PROTOCOL   DATALINK
_____________________________________
 1    AABS       TABS        MPC
```

Establishing the Voice and Data Connections

The following table summarizes the way the DMS switch connects to a VSN. The left column lists the generic steps, and the right column relates those steps to the preceding sample VSN configuration figure.

Establishing DMS-to-VSN connections (using the preceding sample VSN configuration figure)

Step	Description	Example from
1	An application requests a VSN.	AABS requests a VSN.
2	The DMS switch chooses the least active voice link.	TOPSVSN 1002 is currently the least active trunk.
3	The DMS switch indexes table VSNMEMBR with the member number and finds the connected VSN number.	The DMS switch indexes table VSNMEMBR with 1002 and finds VSN 1.
4	The DMS switch asks the MPC for the logical link number of a data link connected to the desired VSN.	The DMS switch asks the MPC for a data link connected to VSN 1.
5	The MPC returns the most idle logical link number.	The MPC returns MLC (2,2,1).
6	The DMS switch begins messaging over that data link.	The DMS switch is now connected to VSN 1 over trunk member 1002 for voice and MLC (2,2,1) for data.

AF2372 - SA Logon

Background

Service Assistants (SA) have historically not had to log on to the DMS switch. They have been able to go directly to their position and accomplish the required tasks. This is no longer the case. Service assistants are required to

TOPS Call Processing Features (Administration) (continued)

first enter an operator ID, and optionally a password, before any other functions are allowed.

Note 1: Service assistants do currently have to log on to the ORDB database with an operator ID but the CC is not involved.

Note 2: Service assistants throughout this document include both assistant and in-charge positions.

Requiring SAs to log on is not seen as an issue when logging onto a TOPS MP. This is because the SA still had to navigate through the logon and password screens even though the input was not required. Many SAs assumed that this was required and dutifully entered both an operator number and password. This feature ensures that these operators efforts are rewarded.

This feature only applies to TOPS MP SA positions. There should be no effect whatsoever on any other position type.

Currently, there are two database vendors supplying intercept and Directory Assistance Systems (DAS) through the DMS switch. For simplicity, SA logon is implemented in the same manner within the DMS switch for these DAS vendors.

Operator login

The keystrokes required by the SA to login are modeled after login keystrokes for general operators. The login screens are the same as those currently displayed for general operators. Complete discussion of these screens and most MMI is covered in feature AF2374 (feature TOPS MP Terminal Handler High Speed in functionality TOPS MP Terminal Support), this feature's companion TPC feature.

DAS login

With this feature, the CC is an active participant in SA DAS login. The old SA DAS login method was done with no CC knowledge and therefore had access to very little CC information. This feature implements SA DAS login such that static CC information can be used for DAS login. The only link to the DAS used by this feature is through the TPC. The TPC keeps both the DAS and CC (Central Control) informed on how login is proceeding.

TOPS Call Processing Features (Administration) (continued)

Login sequence

The expected SA login sequence from a TOPS MP position consists of the following operator actions:

1. Seat the headset.
2. Press the space bar on the TOPS MP position. This brings up the login screen.
3. Enter their operator number and depress the Start key.
4. If office parameter *TOPS_PASSWORD_ENABLE* is active then the cursor is moved to the password field and a password must be entered. The operator enters their password and depresses the Start key.
5. Upon successful password entry, or if no password is needed, the CC initiates DAS login if required as indicated by the operator's service set.
6. If the DAS login is successful, the service set for the position and the operator number are intersected and this service set is sent to the TPC.
7. If DAS login is unsuccessful, the SA position receives DAS assistance calls from a general operator.
8. If during any of the above, the headset is unseated, the operator is logged off and the please login screen is displayed at the position.

Logout sequence

When the SAs are ready to logout, they first depress the QUIT CALLS softkey. When the active calls have completed, then they should unseat their headsets. This puts them back into the logon screen.

If, by accident, the headset is unseated before the call is finished and the SA is assisting another operator, then a logoff pending message displays on the SA position screen. When the SA has finished processing the call, the screen updates to the please login screen.

If the SA is monitoring another call or is not currently processing any calls then the SA is logged off immediately. The display on the general operator's screen indicating the SA was being monitored is cleared.

Note: This is different from the current logout method. Previously the headset could be unseated and another headset seated without any effect on the customer. Even though the headset had been unseated, the screens remained active as long as the position was in the call processing state.

TOPS Call Processing Features (Administration) (continued)

Operator actions

To implement SA Logon, the exchange of information between the CC (Central Control) and the TPC must be enhanced. The following discusses these changes in the expected chronological order of messages.

Headset seated

If no one is logged on to this position, internal data must be initialized such that only certain actions can be done by the SA until a valid operator number has been entered. These actions include unseating the headset and entering an operator number.

The state of the position must be checked when the headset seated message is received. If the position already has an SA logged on, as is the case during pending logout, then nothing is done with this message.

Operator login

When the operator ID is received from the TPC, the ID is first verified against table OPRDAT. The operator ID must be datafilled in table OPRDAT and the operator ID type in table OPRDAT must match the operator type in table TOPSPOS for the ID to be considered valid. There is an exception to this rule for in-charge operators. If the operator ID is of type in-charge then the ID is valid at either in-charge or assistance positions. If the operator ID is not valid the operator is prompted for an ID again. This continues until the SA enters a valid operator ID or unseats the headset.

Once a valid operator ID is received, a check is made to see if a password is required. If password entry is required, the SA is prompted for a password. If a password is not required a check of the service set, from table TOPSPOS, is made. If either INTERCEPT or DA is included in the service set, then DAS login must be initiated. If neither password or DAS login is required, then login is considered complete and the operator screen advances to the assigned activity screen. If the operator ID is entered after it has already been accepted, the keystrokes are ignored.

Optional password entry

Upon receipt of the password, the CC ensures that the password belongs to this operator. If the password is incorrect, a log is printed at the SADS/TADS device and the operator is prompted to enter the password again. The log printed at the SADS/TADS device was created by feature AG0931 for general operator password entry. There are no changes introduced to this log by this feature.

If the password is correct, a check of the service set required for this operator is made. If the service set requires the SA to be logged into DAS, for INTERCEPT or DA, then a Login to Database message is sent to the TPC

requesting the TPC to log the position into the appropriate database. If DAS login is not required, then login is considered complete and the SA screen advances to the assigned activity screen.

Optional login to database

This message is new. Previously SA database logon was initiated by the operator through the TPC without any CC interactions. Now a message is sent from the CC to the TPC telling the TPC to log the position into a specific DAS based upon the combined service set.

Database login result

When the TPC gets the login result from the DAS, it forwards the CC a message with the results. If the message indicates that the login was successful, the intersection of the position service set and the operator service set is taken. This is then sent to the TPC.

DAS login can fail only by the TPC reporting a failure. If DAS login fails then the SA position completes login and receives DAS assistance calls. A log is output at the MAP indicating the failure to login to the DAS. It should be noted that even if DA is the only thing in the SA's service set and DA login fails, the SA logs in and is available to assist DA operators in handling general DA assistance problems. For example, if a general DA operator receives a call from an abusive customer, an SA can be connected to the call to assist.

Password update

A new password update softkey for SAs implements at the TOPS MP position by feature AF2374. Upon successful entry of the new password a message passes to the CC including the new password. The CC updates the password for this operator. The CC also reports back to the operator as to whether the operator's password was successfully updated. The password can only be updated when there is not a call at the position.

Headset unseated

When we receive a headset unseated message we must now ensure that the SA cannot perform any functions until the SA logs back in. If the headset is unseated by accident while there is a call on a loop, the position remains active. When the SA has finished processing the call the position is logged off. If the SA is monitoring another position or has no calls on a loop, then the session is considered over. This is meant to follow the current convention for dealing with an accidental headset unseating during an active call.

TOPS Call Processing Features (Administration) (continued)

Force Administration Device Commands

The following commands used at a TOPS device (FADS, SADS, TADS) do not apply to the new IC and ASST operator IDs:

- FD
- FI
- FZ
- RA
- RR
- RQ
- RD
- X
- T

The W commands are used for password administration functions. For example, if operators forget their passwords, the passwords can be reset to “TOPS" from the device. IC and ASST passwords can only be changed from a FADS or SADS device. This section documents the commands that change IC and ASST passwords. The information the user must enter at the device and the format in which it must be entered are identical to how it is entered currently for general operators. The list of W commands that are applicable to IC and ASST operator IDs and passwords follows.

Applicable table list of W commands

Command	Description
WI	Resets an operator password. IC and ASST passwords can only be reset at FADS and SADS devices.
WD	Disables individual operators', or groups of operators', passwords. IC and ASST passwords can only be disabled from the FADS or SADS devices. The TADS device cannot change SA passwords.
WA	Activates passwords that have been disabled by the WD command. IC and ASST passwords can only be disabled from the FADS or SADS devices. The TADS device cannot change SA passwords.

CH02884 - Discrepancy in AOP Results

Scan-Based AOP and %OCC Statistics (background)

Prior to BCS28, Average Occupied Position (AOP), Board Hour (BDH) and Percent Occupancy (%OCC) statistics for TOPS FADS/TADS/SADS Force Management reports were generated using data collected on a ten second scan basis by the TOPS system. Every ten seconds the system is scanned to determine the number of positions currently occupied. This value was multiplied by ten to extrapolate the number of occupied position seconds for the ten second period. The resulting value was then divided by the number of seconds in a report period to generate the Average Occupied Positions. For example, if two operators are logged on for a 15 minute period, 90 scans are made, each one adding 2 * 10 = 20 seconds of occupied position data to the tally. At the end of the period, 90 * 20 seconds of data accumulates, which when divided by the number of seconds in the period yields the Average Occupied Positions: (90 * 20) / 900 = 1800/900 = 2.0 positions.

While this method was sufficiently accurate to calculate AOP, BDH and %OCC data on a system-wide and per-traffic office basis, by-queue AOP, BDH and %OCC statistics calculated on a scanned-data basis were not as useful. Specifically, occupied position data for each operator was tallied according to the “highest" queue in the operator's transfer set (NON XFR, XFR1, XFR2, and DA, where NON XFR = “lowest," DA = “highest"). Thus, an operator with NON XFR and XFR1 in the operator's transfer set appears as 1.0 average occupied positions in the XFR1 statistics (and contributes 1 Board Hour to the XFR1 Board Hour totals for each hour spent occupying a position), even if some or all of the calls handled by the operator for the report period were from the NON XFR queue.

This attribution of occupancy to the “highest" call queue served also caused the skewing of %OCC statistics in the by-queue portion of the FM reports. By-queue %OCC, while output as part of the FM reports, was not usable, with values exceeding 100% being reported for some queues, and artificially low values reported for others.

Real-Time Peg Based AOP and %OCC Statistics (description)

Thus, for TOPS configurations where transfer call queues are not in use, scan-based AOP and %OCC statistics are accurate and sufficient. However, for configurations employing the TOPS transfer queues this method is not adequate, since the by-queue statistics are not usable. For this reason in BCS28 a change was made to the way in which AOP, BDH and %OCC are calculated for all portions of the FM reports (system-wide, by-traffic office, and by-queue).

The newer mechanism employs real time pegs to account for all time spent by each operator occupying a position. Essentially, all time between the seating

TOPS Call Processing Features (Administration) (continued)

of a headset and the unseating of a headset is accounted for. Each portion of this time is attributed to either Call Busy Work Volume (CBWV), Non Call Work Volume (NCWV) or Idle Time (IDLT). By summing these three components for a given period of time, the number of Average Occupied Positions is obtained by dividing this sum (in seconds) by the number of seconds in the period. For example, if operators accumulate 1800 seconds of occupancy time for a 15 minute period of time, AOP = (1800 secs/900 secs) = 2.0 positions (and 1800 seconds = 1/2 hour of Board Hour time is recorded for the operators).

%OCC is calculated by dividing the work volume (CBWV plus NCWV) by the work volume plus idle time (CBWV plus NCWV plus IDLT), and multiplying the result by 100 to get a percentage. The resulting figure indicates the percentage of time operators spent at their positions accumulating work volume as opposed to being idle. Thus, if two operators accumulate 1640 seconds of CBWV, 50 seconds of NCWV and 110 seconds of IDLT in a 15 minute period, %OCC = (1640 + 50)/(1640 + 50 + 110) * 100 = 1690/1800 * 100 = 93.9%, i.e., the operators were idle waiting for calls to arrive 6.1% of the time, and unavailable to handle calls 93.9% of the time.

This method of calculation lends itself to accurate computation of AOP and %OCC on a by-queue as well as system-wide and by-traffic office basis, because it allows attribution of occupied position time according to how much time is actually spent serving each queue. For example, if for a particular TOPS configuration 10 operators have NON XFR and XFR1 in their transfer sets, and spend 80% of their time handling NON XFR calls and 20% of their time handling XFR1 calls, they appear as 8.0 occupied positions in the NON XFR by-queue statistics, and 2.0 occupied positions in the XFR1 by-queue statistics

> ***Note:*** With the pre-BCS28 scan-based system they appeared as 10.0 positions under the XFR1 by-queue AOP statistics.

In a similar manner %OCC statistics are calculated in a more accurate manner for by-queue statistics, preventing the problem of occupancy percentages potentially exceeding 100%, which can occur with the scan-based system.

For large teams the newer peg based AOP, BDH and %OCC statistics provide accurate and reliable reports. However, due to limitations inherent to this type of real-time pegging, calculated results can occasionally be skewed over a short period (e.g., 15 minutes), for offices with small teams. This is because CBWV is only pegged at certain points in the course of a call. If a call is at a position across a 15 minute report boundary, the CBWV is typically pegged when the call leaves the position. Thus if a call arrives at a position 30 seconds before a 15 minute mark, and leaves it 5 seconds after the mark, 35 seconds of

CBWV are pegged in the second period, and 25 seconds are “missing" from the first period's data. This has the effect of decreasing the reported AOP value in the first period, and increasing it in the second.

Over the course of a 6- or 24-hour report period (the report interval for which BDH is output instead of AOP), this skew is a negligible percentage of the total work volume. However, in a 15 minute report period it may be detectable, particularly in a small team configuration (in a small team if a single operator carries a long call across a report boundary, its CBWV may represent a significant portion of the total CBWV accumulated for the period, causing a noticeable skew in the AOP). With large teams, the occasional long call across a report boundary represents only a small percentage of the total CBWV, and does not have a detectable effect on the AOP for the period.

Note: NCWV and IDLT do not suffer from this sort of skew; the system pegs NCWV or IDLT for positions in a Make Busy or Idle state, respectively, when a 15 minute boundary is crossed.

Thus, real-time pegs are necessary if meaningful by-queue AOP, BDH and %OCC statistics are desired, and the potential for skew across report periods is unavoidable. However, for some small single queue systems, by-queue statistics are not required, and thus real-time pegging of occupancy statistics is unnecessary and in fact undesirable due to the potential for skew, which tends to be most noticeable in small configurations such as these.

Datafilling TOPS positions and devices

The TOPS software enables you to define a single hardware component, the TOPS position, to perform one of the following functions:

- Operator (TA): - in table TOPSPOS
- In-charge: - in table TOPSPOS
- Assistance: - in table TOPSPOS
- Force management: - in table TOPSDEV

Note: If you are using TOPS MP positions, the position type needs to be defined in the TPC as well. Positions are defined in the TPC using the TAMI.

When TOPS is first installed, you can specify the number of each type of position that you want in the office. In multitraffic office environment, each operator services office contains only one force management position and one in-charge position. The number of operator versus assistance positions varies from office to office.

TOPS Call Processing Features (Administration) (continued)

Once TOPS is installed, if you want to redefine any of the positions, you can request that maintenance do so. Maintenance redefines the positions in a TOPS MP office by changing the DMS switch and TPC datafill (refer to *TOPS MP TAMI User Guide*). Maintenance redefines the positions in a TOPS 04 office by changing the DMS datafill only.

In addition to defining positions, you must also define the devices required to gather office statistics and administrate the HOBIC. The TOPSDEV table contains the device data. Note that the TPC does not require parallel datafill for devices defined in the TOPSDEV table.

Datafilling table TOPSPOS to define Operator Positions

In the TOPS position (TOPSPOS) table, you need to identify the following for each position that requires two trunk circuits, one for data and one for voice:

- the trunk circuit locations
- the traffic office for the position

The two analog trunk circuits for each position must be assigned to the same card (with the voice circuit being assigned first).

When assigning digital trunk circuits to a digital trunk controller (DTC), follow the N plus 1 rule (with the voice trunk being assigned first). When assigning digital trunk circuits to a digital control module (DCM), follow the N plus 4 rule (with the voice trunk being assigned first).

The OFCENG table contains an office parameter that specifies the number of transfer keys that are assigned on an Operator Position associated with one, two, or all three queues available. These queues are as follows:

- Call transfer queue 1: The TOPS software looks for a TOPS position in this queue when the “transfer key 1" is operated by a TOPS operator transferring a call. This feature can be used for call transfer to a TOPS position able to handle another language, directory assistance, or intercept calls, for example.
- Call transfer queue 2: This transfer queue is the same as the call transfer queue 1, except that it corresponds to “transfer key 2."
- Directory assistance: This transfer queue is used in TOPS MP offices with DA capabilities only.

Memory is allocated for the TOPSPOS table by the value in field TRKGRSIZ in the CLLI table for the following two pseudo-CLLI codes: TOPSPOS and TOPSPOSDATA.

The value in the TRKGRSIZ field of table CLLI must be the same for both of these pseudo-CLLIs. If you want to increase the size of the TOPSPOS table, you must:

1. Delete all members from table TOPSPOS
2. Increase the size specified in table CLLI for both the TOPSPOS and TOPSPOSDATA pseudo-CLLI codes
3. Redatafill table TOPSPOS, adding the appropriate old and new members

Datafilling table TOPSDEV to define operator service devices

In the TOPS device (TOPSDEV) table, you need to identify the trunk circuit location for each device that requires only one trunk circuit. The following types of devices use only one trunk circuit for transmission of data between the device and the DMS switch:

- AQ: - Autoquote
- DAAQ: - Dial-up autoquote
- DADS: - Delay call database administrator device
- FADS: - Force administration data system
- FADSHADS: - Force and hotel administration data system
- FMCRT: - Force management position CRT
- HADS: - Hotel administration data system
- MFADS: - Mechanized force administration data system
- NOTIS: - Network operator trouble information system
- RECORD: - Record
- SADS: - System administration data system
- SADSHADS: - System and hotel administration data system
- TADS: - Traffic office administration data system
- VQ: - Voicequote

The trunk circuit for each device can be assigned to either the odd or even circuit on the trunk module (TM).

Translations table flow

The TOPS Call Processing Features (Administration) translation process is shown in the flowchart that follows.

TOPS Call Processing Features (Administration) (continued)

Table flow for TOPS Call Processing Features (Administration)

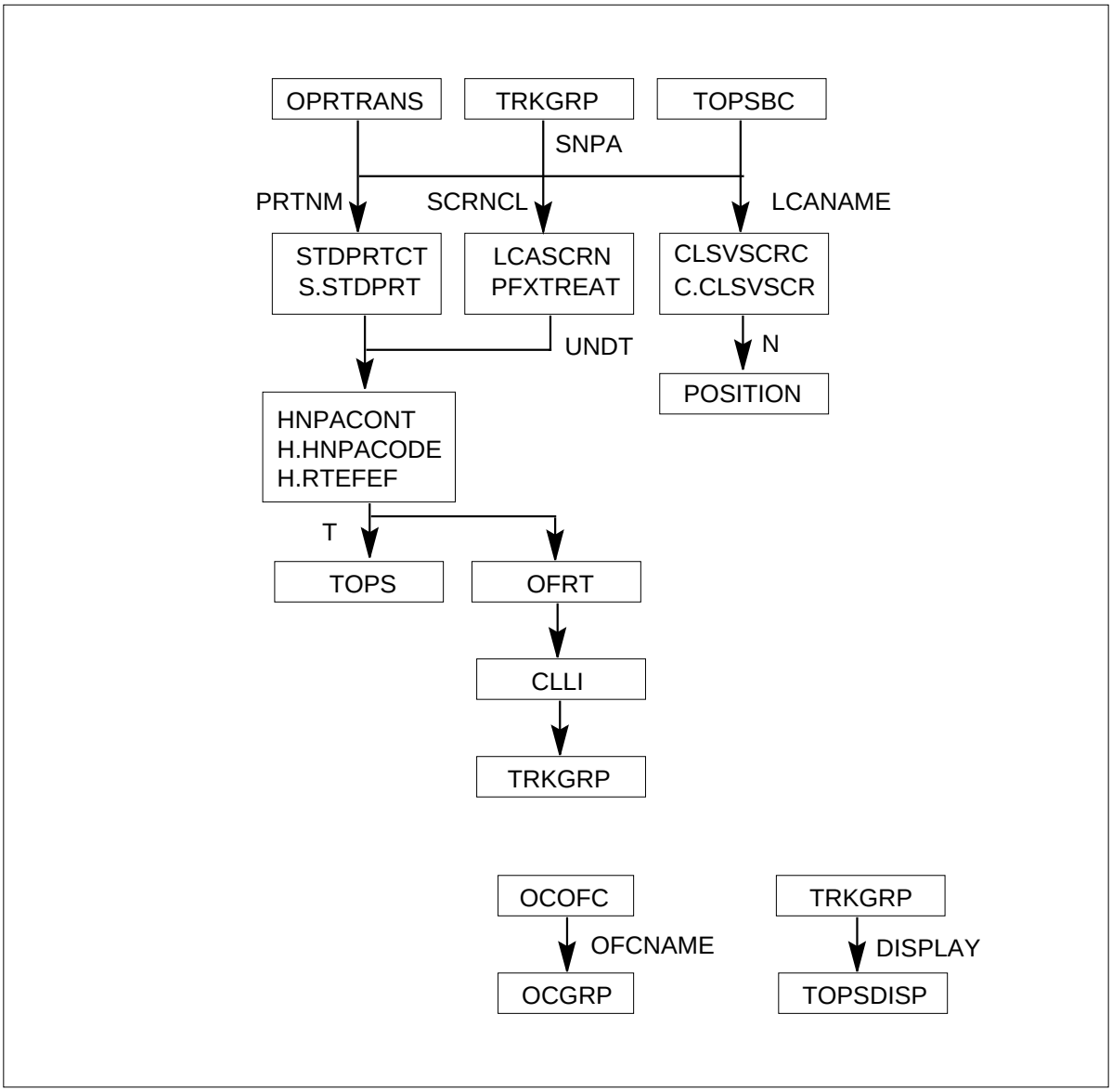

Limitations and restrictions

The following limitations and restrictions apply to TOPS Call Processing Features (Administration):

AF2372 - SA Logon

This feature only applies to TOPS MP positions. Also, this feature does not affect any of the force management (including STATSPAC) tools currently

used for general operators. The SADS/TADS “L" command does not display SA positions.

F2574 — AMA Failure Routing Options

The routing options available for AMA failure have the following limitations:

- Routing a call free of charge slows down call processing. The Operating Company can activate an AMAB log report during AMA failure to recover AMA billing information. The log report is controlled by the SPECIAL_AMA_REPORT office parameter (refer to *Office Parameters Reference Manual* for further details on this parameter). The extra checking required slows down call processing.
- Routing the call to an announcement or a tone means a loss of revenue for the Operating Company.
- Routing a call to a TOPS operator means that the TOPS office must handle traffic generated by another office. The additional traffic can delay or block regular operator handled calls during peak traffic hours and may eventually flood the system. Special caution must be exercised if this option is chosen.

The route free of charge option does not apply to calls handled by a TOPS operator. In such cases, when the call arrives at the TOPS position and a recording unit is not available, the call is blocked.

427 — TOPS Base MMI Modifications

The SPLVFY entry of the OPRTRANS table is not used by the system unless G0058 of feature AWT Enhancements is active in the software load.

Interactions

The following paragraphs describe the interactions between TOPS Call Processing Features (Administration) and other functionalities.

AF1527 - TOPS Data and Voice Link Utilities requires MPC data links for messaging between the DMS switch and the VSN.

AF2372 - SA Logon needs the TPC feature AF2374 (feature TOPS MP Terminal Handler High Speed in functionality TOPS MP Terminal Support) to function properly.

Activation/deactivation by the end user

TOPS Call Processing Features (Administration) requires no activation or deactivation by the end user.

TOPS Call Processing Features (Administration) (continued)

Billing

BV1345 - TOPS - AMA Records Verification

This feature generates AMA billing records for line verification attempts made by an operator. An F1 AMA billing record is generated if a line verification is made. If the line verification results in a connection to the party being verified, an F3 AMA billing record is generated.

The F1 and the F3 AMA billing records are the same except the F3 has an additional field. What follows is an explanation of the fields in these two billing records. The fields are listed in the order they appear on a report produced by the DMS switch.

Record Code

The two-character entry in this field identifies the record type. The entry in this field is either F1 for F3. F1 represents a Direct Distance Dialed TOPS-assisted record type and F3 represents a Direct Dialed Overseas TOPS-assisted record type.

Entry Code

The two-digit entry in this field can take a value from 00 to 99. The entry code identifies the call type recorded. The following table lists the entry codes and the call type each represents.

Entry codes

Entry code	Call type
00	Station Paid DDD
01	Station Paid LCDR
02-07	Reserved for Special Features
08	TWX
09	DATA
10-15	Reserved for Special Features
16	Time Message Rate
17	Untimed Message Rate
18	Detailed Message Rate
19	Conference Trunk Usage
20	Station Paid Operator Assisted

TOPS Call Processing Features (Administration) (continued)

Entry codes

Entry code	Call type
21	Station Collect
22	Station Special Calling
23	Person Paid
24	Person Collect
25	Person Special Calling
26	Auto Collect
27	Station Special Called
28	Person Special Called
29	Person Call Back (PCB)
30	PCB Special Billing
31-39	Not Used
40	*Station Paid DDO
41-55	Reserved for Special Features
56	Not Used
57	Not Used
58-59	Reserved for Possible Future Use
60	*Station Paid Operator Assisted
61	*Station Collect
62	*Station Special Calling
63	*Person Paid
64	*Person Collect
65	*Person Special Calling
66	*Not Used
67	*Station Special Called

TOPS Call Processing Features (Administration) (continued)

Entry codes

Entry code	Call type
68	*Person Special Called
69	*Person Call Back (PCB)
70	*PCB Special Billing
71-79	Not Used
80	INWATS - Measured Time
81-83	Reserved for Possible Future Use
84-89	Not Used
90	Used by LAMA Initial Extension Entry
91-95	Not Used
96	Unspecified (default)
97	Cancelled Call (Domestic)
98	Cancelled Call (Overseas)
99	AMA Test Call
	* Indicates International Dialing

Information Digit 1-2

These two digits, each ranging in value from 0 through 7, provide event information through a YES/NO system. An entry for the first information digit is made from the first matrix in the following figure. The first information digit indicates whether the call recorded was subject to service analysis or traffic sampling. This field also indicates whether the call originated on a chargeable route.

Note: Since the F1 and the F3 AMA billing records are never chargeable, the only possible entries for the first information digit are 0, 1, 4, or 5.

An entry for the second information digit is made from the second matrix in the following figure. This second information digit indicates whether the call was an ANI fail call, an operator-dialed call, or an operator-identified call.

TOPS Call Processing Features (Administration) (continued)

Meaning of Information Digit 1-2 values

Information Digit	Event Indicated	Value							
		0	1	2	3	4	5	6	7
	Service Analyzed?	N	Y	N	Y	N	Y	N	Y
First	Charge?	N	N	Y	Y	N	N	Y	Y
	Traffic Sampled?	N	N	N	N	Y	Y	Y	Y
	ANI Fail?	N	Y	N	Y	N	*	N	*
Second	Operator Dialed?	N	N	Y	Y	N	*	Y	*
	Operator Identified	N	N	N	N	Y	*	Y	*

* Not Applicable

Service Feature Code

This field consists of a two-digit entry. The first digit represents the service class of the calling party and the second digit represents the service class of the called party. The following table explains the service feature codes.

Service feature codes

Service feature code	Meaning
0	Non-coin or Default
1	Coin
2	Hotel/Motel
3	Picturephone (currently not available)
4	Dataphone
5	3-way calling
6	Conference calling
7	Call forwarding
8	For future use
9	For future use

Calling Number

The ten-digit entry in this field identifies the calling number associated with the verification attempt. If the call never had a calling party, the calling number

TOPS Call Processing Features (Administration) (continued)

field is left blank. If the calling number is not connected when the verification attempt is made, the AMA recording unit is suppressed and the calling number field is left blank. The AMA system records the calling number only if the calling party is physically connected to the call when the F1 and the F3 AMA billing records are generated.

Called Number

This 18-character field contains the number being verified. This number must be keyed in by the operator.

Extra DDO Digits

This field applies only to the F3 billing record for overseas calls.

Event Information Digit

This entry is made from the matrix in the following figure. It provides information regarding certain events that have occurred during a call. Refer to the following figure.

Event information digit meaning

Meaning	Value 0 1 2 3 4 5 6 7 8
Answer	Y Y N N Y Y N N N
Calling Party Disconnect	Y N Y N Y N Y N Y
Called Party Disconnect	N Y N Y N Y N Y N
Blue Box Fraud	N N N N Y Y Y Y N
Blocked	N N N N N N N N Y

Start Day

The entry in this field identifies the day of the call.

Start Time

The entry in this field identifies the date and the time the call arrived at the TOPS position.

Elapsed Time

The entry in this field represents the number of seconds that the operator was attached to the party being verified. If no connection is made to the party being verified, this field indicates the time from outpulsing to position release.

TOPS Call Processing Features (Administration) (continued)

Operator Number
The entry in this field identifies the operator handling the verification attempt.

Team Number
The entry in this field identifies the team to which the operator is assigned.

Information Digits 3-6
These digits, each with a value of 0 through 7, provide information related to the call through a YES/NO system. See the following figure for the meaning of each digit.

Meaning of Information Digits 3, 4, 5, and 6

Information Digit	Meaning	Value 0 1 2 3 4 5 6 7
	No Connect?	N Y N Y N Y N Y
Third	Verification Request?	N N Y Y N N Y Y
	Validity Check Failure or Security?	N N N N Y Y Y Y
	Trouble Report?	N Y N Y N Y N Y
Fourth	Charge Adjust?	N N Y Y N N Y Y
	Local Call?	N N N N Y Y Y Y
	Dial Rate Key?	N Y N Y N Y * *
Fifth	Automatic No AMA?	N N Y Y N N * *
	No AMA Key?	N N N N Y Y * *
	Call Transfer?	N Y N Y N Y N Y
Sixth	Cancel Timing?	N N Y Y N N Y Y
	Cancel Call?	N N N N Y Y Y Y

Note: The only possible entries for the third digit are 2, 3, 6, and 7 since verification request must be true or set to Y.

Originating Type
The entry in this field indicates how the call originated to a TOPS operator. The following table explains the type codes.

Origination types

Type code	Meaning or call type
00	Not Used
01	1+ (011+)

TOPS Call Processing Features (Administration) (continued)

Origination types

Type code	Meaning or call type
02	0+ (01+)
03	0
04	RONI
05	ALM
06	INTC
07	1153 (Marine)
08	141 (Rate and Route)
09	MOBILE
10	121
02-07	Reserved for Special Features
11-19	Reserved for Future Use
20	131
21-29	Reserved for Future Use
30	181
31-39	Reserved for Future Use
40	1150
41	Reserved for Future Use
42	1152 (Mobile)
43-49	Reserved for Future Use
50	1155
51-59	Reserved for Future Use
60	1156
61	Reserved for Future Use
62	1158

TOPS Call Processing Features (Administration) (continued)

Origination types

Type code	Meaning or call type
63	1159
64-69	Reserved for Future Use
70	Delay Calls
71-79	Reserved for Future Use
80	Coin Recalls
81-88	Reserved for Future Use
89	411
90	555 (Universal Information)
91-99	Reserved for Future Use

Station Message Detail Recording

TOPS Call Processing Features (Administration) does not affect Station Message Detail Recording.

TOPS Call Processing Features (Administration) (continued)

Datafilling office parameters

The following table shows the office parameters used by TOPS Administration. For more information about office parameters, refer to *Office Parameters Reference Manual*.

Office parameters used by TOPS Call Processing Features (Administration)

Table name	Parameter name	Explanation and action
OFCENG	AMA_FAILURE_FREE_CALL	The valid entries for this parameter are N and Y. If the parameter is set to Y, all toll calls (CAMA and LAMA) are routed free of charge and all TOPS calls are blocked when AMA failure occurs. If the parameter is set to N, all toll calls are routed to a route position in the POSITION table.
OFCENG	PPMBUFFS	Before BK01973 - Revisit TOPS PPMBUFFS Utilization, office parameter PPMBUFFS (the number of buffers required for TOPS) was calculated as follows: 0.3 x (number of TOPS + OOCVLMEMS) This calculation provides for CAMA and AOSS positions as well. However, this PRSDOC does not apply to these positions. Therefore, the calculation for CAMA and AOSS remain as 0.3 x (CAMA + AOSS). In addition, TOPS and OOC are two mutually exclusive software packages. However, OOC position maintenance uses the same software as TOPS position maintenance. Therefore, OOC is inherently affected by this activity.

TOPS Call Processing Features (Administration) (continued)

Office parameters used by TOPS Call Processing Features (Administration)

Table name	Parameter name	Explanation and action
		The resulting total new number of PPMBUFFS required by TOPS (or OCC) positions is 12. This applies to BCS34 or greater loads. Note that TOPS incoming trunks are NOT included in this calculation. They fall under the “size of largest trunk group / 20" category in the calculation provided in the description of office parameter PPMBUFFS. Likewise, TMSs and associated TPCs should be included in the “total number of peripheral modules / 10" category. This value should be added to the total number of buffers required in an office according office parameter PPMBUFFS.
OFCENG	TOPS_EXPANDED_OPRNUM	This new office parameter is added to table OFCENG to control the nil operator ID value recorded on AMA. When this parameter is set to N, it implies that the Operating Company is not using expanded operator numbers provided by BR21462 and that 3101 is recorded on AMA for the nil operator ID. When this parameter is set to Y, the Operating Company may use the expanded range of operator numbers, and 9999 is recorded on AMA for the nil operator ID. This parameter affects parameter TOPS_MAX_OPERATOR_NUM. When TOPS_EXPANDED_OPRNUM is set to N, TOPS_MAX_OPERATOR_NUM is limited to the old range (0-3099) of operator numbers. When TOPS_EXPANDED_OPRNUM is set to Y, TOPS_MAX_OPERATOR_NUM can be set to any value in the expanded range (0-9997). Inversely, when TOPS_MAX_OPERATOR_NUM is set to a value greater than 3099, TOPS_EXPANDED_OPRNUM cannot be changed to N.

TOPS Call Processing Features (Administration) (continued)

Office parameters used by TOPS Call Processing Features (Administration)

Table name	Parameter name	Explanation and action
OFCENG	TOPS_MAX_OPERATOR_NUM	Existing operator numbers may have to be modified so that each operator with access to the same ORDB has a unique number assigned. This may, in turn, require an increase in parameter TOPS_MAX_OPERATOR_NUM. Operator numbers are assigned through Force Management, and stored in table OPRDAT in a standalone TOPS switch or TOPS OC Host. The highest number that may be assigned to an operator in this table is specified in parameter TOPS_MAX_OPERATOR_NUM in table OFCENG. This office parameter should be reengineered so that there are enough operator IDs for all of the operators in the office, including in-charge and assistance operators. The datafillable range of TOPS operator numbers is increased from 0-3099 to 0-9997. This affects tables OPRDAT and OPRCMPLX, and office parameter TOPS_MAX_OPERATOR_NUM. However, if the office is a DMS-250 office, then the range is 0-4095 for TOPS_MAX_OPERATOR_NUM and 1-4095 for tables OPRDAT and OPRCMPLX. To increase the value of TOPS_MAX_OPERATOR_NUM, it is no longer necessary to first delete all tuples from tables OPRDAT and OPRCMPLX. The value in

TOPS Call Processing Features (Administration) (continued)

Office parameters used by TOPS Call Processing Features (Administration)

Table name	Parameter name	Explanation and action
		TOPS_MAX_OPERATOR_NUM can be changed and new tuples added immediately to the tables. The size of the affected table is updated automatically when the new tuples are added. Due to the increase in the range, the nil operator number used in EBAF AMA is now 9999 instead of 3101. Refer to AF1726 (TOPS EBAF, OSB00101). The value 9998 is used internally (as was 3100 before the increase), so it is not a valid operator number. Also in table OPRCMPLX, fields CPLXNUM and UNITNUM allow a larger range of values for increased flexibility. Although the ranges have been increased in fields CPLXNUM and UNITNUM, the increased range should not be used unless the external DA systems, which utilize these values, are updated to handle the new ranges. In an operator centralization (OC) host office, the office parameter range cannot be set above the old maximum value (i.e., 3099) unless all connected remotes are upgraded to BCS32 or greater. All remotes' BCS levels are checked in table OCGRP. All must be 32 or greater. This restriction is due to OC messaging, which prior to BCS32 expects the operator number to be in the smaller range. For more information pertaining to field BCSLEVEL in table OCGRP, refer to feature NC0152 (Host Remote Networking Type).
OFCENG	TOPS_NUM_CAMA_RU	This parameter specifies the quantity of CAMA/TOPS RUs required for recording call information. This office parameter size has increased by five words to a total of 69 words.

TOPS Call Processing Features (Administration) (continued)

Office parameters used by TOPS Call Processing Features (Administration)

Table name	Parameter name	Explanation and action
OFCENG	TOPS_NUM_RU	This parameter specifies the quantity of TOPS Recording Units (RUs) required for recording call information. This office parameter size has increased by six words to a total of 107 words.
OFCENG	TOPS_PASSWORD_ENABLE	The TOPS_PASSWORD_ENABLE office parameter activates the password feature, AG0931, for TOPS positions. When this parameter is N then the operator logs on to a position by entering their operator ID. When this parameter is Y, the operator must enter a password immediately after their operator ID.The only change to this parameter is the scope of TOPS positions affected by this office parameter. With the addition of feature AF2372, SA and IC positions are required to enter a password when this parameter is Y. No other changes to this parameter are made by this feature.

TOPS Call Processing Features (Administration) (continued)

Office parameters used by TOPS Call Processing Features (Administration)

Table name	Parameter name	Explanation and action
OFCVAR	AMA_FAILURE_ROUTE_POSITION	The valid entry for this parameter is POSITION. When AMA_FAILURE_FREE_CALL is set to N, this parameter is accessed. When this parameter is accessed, the calls are routed to the POSITION Table when AMA fail occurs. The BR0475 feature adds the AMAFAIL position to the POSITION table. The AMAFAIL position is datafilled with an office route reference index. The office route reference index refers the calls to a route list in the OFRT table. The route list is defined by the Operating Company Refer to *Office Parameters Reference Manual* for more information on this parameter.

TOPS Call Processing Features (Administration) (continued)

Office parameters used by TOPS Call Processing Features (Administration)

Table name	Parameter name	Explanation and action
OFCVAR	TOPS_VERIFICATION_BARGE_IN	This parameter specifies which one of three methods of verification is to be used when an operator verifies a number (see *Office Parameters Reference Manual*). The valid entries for this parameter are BARGE_IN, SCRAMBLE, and MONITOR. The default value for this parameter is MONITOR. If a voice connection to the party being verified is established (keying sequence KP VFY + DIGITS + START), the parameter is set to BARGE_IN. When this parameter is set to BARGE_IN, the scrambler circuit cannot be used. If a voice connection to the party being verified is not established until the operator keys in KY VFY + START after setting up the connection, the parameter is set to MONITOR. When this parameter is set to MONITOR, the scrambler circuit cannot be used. If a voice connection to the party being verified is not established after the operator sets up the connection and a wink is sent to the scrambler circuit, the parameter is set to SCRAMBLE. When this parameter is set to SCRAMBLE, the scrambler circuit is required.

TOPS Call Processing Features (Administration) (continued)

Datafill sequence

The following table lists the tables that require datafill to implement TOPS Call Processing Features (Administration). The tables are listed in the order in which they are to be datafilled.

Datafill tables required for TOPS Call Processing Features (Administration)

Table	Purpose of table
OCOFC	Operator Centralization Office. This table matches an office name to a number so that field OFCNAME can be used as a key into table OCGRP. Each OC office name must be entered in the OCOFC table before it can be referenced elsewhere.
OCGRP	Operator Centralization Group. This table identifies the remote office(s) that the host is serving. It also identifies the voice and data links between the host and the remote office(s).
TOPSAMA	TOPS AMA. This table allows the Operating Company to specify which calls are recorded.
POSITION	Position. This table stores the types of positions with which the switching unit is equipped and their associated routes.
OPRTRANS	Operator Translations. This table contains the information required to select the applicable table for translations of digits dialed by an operator for normal, verification, delay, MCCS sequence, and overseas calls.
TRKGRP	Trunk Group. This table contains customer-defined data associated with each trunk group that exists in the switching unit.
TRKGRP(RONI)	TOPS Remote ONI Trunk Group. This table is part of a feature that allows ONI calls to be recorded by LAMA or CAMA in an office with no CAMA positions in operation.
TRKGRP(TOPSVL)	TOPS Voice Link Trunk Group. This table provides voice links to external applications such as AABS.
TOPSDISP	TOPS Display. This table assigns special instructional displays based on the incoming trunk group.
TOPSPOS	TOPS Position. This table lists the positions that require two trunk circuits (one voice, one data), and identifies the trunk circuit locations.
OPRDAT	TOPS Operator Data. This table lists all the operator numbers that have been assigned.
SERVICES	Services. This table allows the Operating Company to identify the vendor servicing their Directory Assistance (DA) calls.

TOPS Call Processing Features (Administration) (continued)

Datafill tables required for TOPS Call Processing Features (Administration)

Table	Purpose of table
TOPSVNIN	TOPS Virtual Node Inventory. This table contains protocol and data link information for external applications such as automated alternate billing service (AABS).
TOPS	Traffic Operator Position System. This table is used during translations to determine the type of service required by a call based on the call origination type.
TOPSDEV	TOPS Device. This table lists the devices that require one trunk circuit (for data) and identifies the trunk circuit locations.
BCCODES	Bellcore Call Codes. This table contains the call codes used by the TOPS Expanded Bellcore AMA Format (EBAF).
OPRCMPLX	Operator Complex/Unit ID. This table obtains the complex/unit ID for a given operator identification (ID) to support login to the IBM Directory Assistance System (DAS).
RTSNT	Return to Service Nodes Types. This table improves the method by which system-busied nodes and links are returned to service.
RTSALGO	Return to Service Algorithm. This table improves the auditing algorithm by which system-busied nodes and links are returned to service.

Datafilling tables OCOFC and OCGRP

The following table shows the datafill specific to TOPS Call Processing Features (Administration) for table OCOFC. Only those fields that apply directly to TOPS Call Processing Features (Administration) are shown. For a description of the other fields, refer to the data schema section of this document.

Datafilling table OCOFC

Field	Subfield or refinement	Entry	Explanation and action
			No change to table.

Datafill example for table OCOFC

The following example shows sample datafill for table OCOFC.

TOPS Call Processing Features (Administration) (continued)

MAP display example for table OCOFC

```
VALUE          OFCNAME
_____________________________
1              BRONREM
```

The following table shows the datafill specific to TOPS Call Processing Features (Administration) for table OCGRP. Only those fields that apply directly to TOPS Call Processing Features (Administration) are shown. For a description of the other fields, refer to the data schema section of this document.

Datafilling table OCGRP

Field	Subfield or refinement	Entry	Explanation and action
			In an operator centralization (OC) host office, the office parameter range cannot be set above the old maximum value (i.e., 3099) unless all connected remotes are upgraded to BCS32 or greater. All remotes' BCS levels are checked in table OCGRP. All must be 32 or greater. This restriction is due to OC messaging, which prior to BCS32 expects the operator number to be in the smaller range. For more information pertaining to field BCSLEVEL in table OCGRP, refer to feature NC0152 (Host Remote Networking Type).

Datafill example for table OCGRP

The following example shows sample datafill for table OCGRP.

MAP display example for table OCGRP

```
OFFICE       VLGRP       DLOVRLAY
_____________________________________________
BRONREM      TOPSOCLOOPO    HDLC     REMDL
```

Datafilling table TOPSAMA

The TOPSAMA table allows the Operating Company to specify which calls are recorded.

The following table shows the datafill specific to TOPS Call Processing Features (Administration) for table TOPSAMA. Only those fields that apply

TOPS Call Processing Features (Administration) (continued)

directly to TOPS Call Processing Features (Administration) are shown. For a description of the other fields, refer to the data schema section of this document.

Datafilling table TOPSAMA

Field	Subfield or refinement	Entry	Explanation and action
CO		Any one of the entries listed in the following datafill example.	Call Origination Type. This field identifies the type of unanswered calls that could be recorded on AMA tape.
TOT		00-99	TOPS Origination Type Code. This field identifies the call type recorded. Refer to the following table for a definition of each code.
RECNOANS		Y or N	Record No Answer. This field specifies whether or not an unanswered call is recorded on AMA tape. If N is entered, unanswered calls are not recorded. If Y is entered, unanswered calls are recorded. BR0413 - AMA Record of Specified Unanswered Call Types. BR0413 allows the Operating Company to assign, by call type, which unanswered calls are recorded on AMA tape. This is done by datafilling the TOPSAMA table.

Entry codes

Entry code	Call type
00	Station Paid DDD
01	Station Paid LCDR
02-07	Reserved for Special Features
08	TWX
09	DATA
10-15	Reserved for Special Features
16	Time Message Rate

TOPS Call Processing Features (Administration) (continued)

Entry codes

Entry code	Call type
17	Untimed Message Rate
18	Detailed Message Rate
19	Conference Trunk Usage
20	Station Paid Operator Assisted
21	Station Collect
22	Station Special Calling
23	Person Paid
24	Person Collect
25	Person Special Calling
26	Auto Collect
27	Station Special Called
28	Person Special Called
29	Person Call Back (PCB)
30	PCB Special Billing
31-39	Not Used
40	*Station Paid DDO
41-55	Reserved for Special Features
56	Not Used
57	Not Used
58-59	Reserved for Possible Future Use
60	*Station Paid Operator Assisted
61	*Station Collect
62	*Station Special Calling
63	*Person Paid

TOPS Call Processing Features (Administration) (continued)

Entry codes

Entry code	Call type
64	*Person Collect
65	*Person Special Calling
66	*Not Used
67	*Station Special Called
68	*Person Special Called
69	*Person Call Back (PCB)
70	*PCB Special Billing
71-79	Not Used
80	INWATS - Measured Time
81-83	Reserved for Possible Future Use
84-89	Not Used
90	Used by LAMA Initial Extension Entry
91-95	Not Used
96	Unspecified (default)
97	Cancelled Call (Domestic)
98	Cancelled Call (Overseas)
99	AMA Test Call
	* Indicates International Dialing

Datafill example for table TOPSAMA

The following example shows sample datafill for table TOPSAMA.

When a software load is built for an office, the TOPSAMA table is filled with the default values listed as follows:

TOPS Call Processing Features (Administration) (continued)

MAP display example for table TOPSAMA

CO	TOT	RECNOANS
UNSPEC	00	N
OH	03	N
OA	02	N
DD	01	N
CAMA	01	N
RCAMA	04	N
DELAY	70	N
121	10	N
131	20	N
141	08	N
151	00	N

TOPS Call Processing Features (Administration) (continued)

MAP display example for table TOPSAMA (continued)

CO	TOT	RECNOANS
161	00	N
171	00	N
181	30	N
191	00	N
555	90	N
1150	40	N
1151	00	N
1152	42	N
1153	07	N
1154	00	N
1155	50	N
1156	60	N
1157	00	N
1158	62	N
1159	63	N
1160	00	N
1161	00	N
1162	00	N
TS	03	N
TSUB	03	N
APS	03	N
ALM	05	N
INTC	06	N
211	00	N
311	00	N
411	89	N
511	00	N
611	00	N
711	00	N
811	00	N
911	00	N
MOBILE	09	N
SPARE1	00	N
SPARE2	00	N
SPARE3	00	N
SPARE4	00	N
SPARE5	00	N
SPARE6	00	N

Refer to the data schema section of this document for complete details on the TOPSAMA table.

Datafilling table POSITION

The following table shows the datafill specific to TOPS Call Processing Features (Administration) for table POSITION. Only those fields that apply directly to TOPS Call Processing Features (Administration) are shown. For a description of the other fields, refer to the data schema section of this document.

Datafilling table POSITION

Field	Subfield or refinement	Entry	Explanation and action
SYMBOL			BR0475 adds the AMAFAIL position to the POSITION table. Calls are routed to the AMAFAIL position when AMA failure occurs. This position is required if the AMA_FAILURE_FREE_CALL parameter is set to N. The AMAFAIL position specifies the office route to which all calls are routed during AMA failure.

Datafill example for table POSITION

The following example shows sample datafill for table POSITION.

MAP display example for table POSITION

```
POS                    PRTE
_______________________________
AMAFAIL  T  OFRT   21
```

In the above example, AMAFAIL is the type of position, T is the route selector that routes calls to the OFRT table and 21 is the route reference index of the route list in the OFRT table. Refer to the data schema section of this document for complete details on the POSITION table.

Note: When the selector T is specified, OFRT must be datafilled also.

Datafilling table OPRTRANS

The Operator Translations (OPRTRANS) table contains the information required to select the applicable table for translations of digits dialed by an operator for normal, verification, delay, MCCS sequence, and overseas calls.

This table can be used with the standard pretranslator table to allow the Operating Company to control operator originated delay calls (backward

TOPS Call Processing Features (Administration) (continued)

connections). The Operating Company can prevent all delay calls, prevent certain delay calls based on the beginning digits dialed, or permit all delay calls. These three functions use the standard pretranslator table that allows the Operating Company to specify treatments of delay calls.

When a delay call is initiated, the TOPS software looks into table OPRTRANS, option DELAY, and uses the pretranslator name and screening class specified in that tuple to determine the treatment of the delay call.

Note: If an operator enters an 800+ toll-free number (Canadian service only), then initial translations are based on datafill in tables TOPSPARM and HNPACONT. Refer to *800Plus and End-Office Display Office Guide*, 297-5151-022.

The following table shows the datafill specific to TOPS Call Processing Features (Administration) for table OPRTRANS. Only those fields that apply directly to TOPS Call Processing Features (Administration) are shown. For a description of the other fields, refer to the data schema section of this document.

Datafilling table OPRTRANS

Field	Subfield or refinement	Entry	Explanation and action
KEY		DELAY	BR0405 -Delay Call Denial allows the Operating Company to control operator-originated backward connections (delay calls). This is done by adding the DELAY option to the KEY field of the OPRTRANS table.
		SPLVFY	The key field entry TOPSLINE is changed to SPLVFY to control the routing of third number authorization calls that use the Special Verify AWT Enhancement feature. The SPLVFY entry is only used by the system if feature package AWT Enhancements is active. This tuple is visible to the Operating Company whether or not it is part of the software load or not. See AWT Enhancements for more information on this table.

Datafill example for table OPRTRANS

The following example shows sample datafill for table OPRTRANS.

TOPS Call Processing Features (Administration) (continued)

MAP display example for table OPRTRANS

```
KEY          SNPA     SCRNCL       PRTNM       LCANAME
_____________________________________________________
OPERATOR      613       NSCR        OPER        NLCA
VERIFY        613       NSCR        OPVE        NLCA
SPLVFY        518       NSCR        NPRT        NLCA
DELAY         613       NSCR        BACK        NLCA
MCCS          518       NSCR        NPRT        NLCA
```

Datafilling table TRKGRP (TOPS)

The Trunk Group (TRKGRP) table contains customer-defined data associated with each trunk group that exists in the switching unit.

The following table shows the datafill specific to TOPS Call Processing Features (Administration) for table TRKGRP. Only those fields that apply directly to TOPS Call Processing Features (Administration) are shown. For a description of the other fields, refer to the data schema section of this document.

Datafilling table TRKGRP

Field	Subfield or refinement	Entry	Explanation and action
DISPLAY		0 - 31	The DISPLAY field points to the appropriate instructional display in the TOPSDISP table.

Datafill example for table TRKGRP

The following example shows sample datafill for table TRKGRP.

MAP display example for table TRKGRP

```
GRPKEY                          GRPINFO
_____________________________________________________
TOPCOMAMF
TOPS 0 NPDGP NCRT IC MIDL 919 TOP1 NLCA NSCR Y SP
COMBINED
  Y Y 3  BELL  10  2  2
```

TOPS Call Processing Features (Administration) (continued)

Datafilling table TRKGRP(RONI)

The TOPS Remote ONI Trunk Group TRKGRP(RONI) table is part of a feature that allows ONI calls to be recorded by LAMA or CAMA in an office with no CAMA positions in operation.

Datafilling table TRKGRP(RONI)

Field	Subfield or refinement	Entry	Explanation and action
NBECID		0-9999	This is a new field in BCS28. This field specifies the Non-BOC Exchange Carrier identification associated with the RONI calls originating on the trunk.
SNPA		valid SNPAs	This is a new field in BCS28. This field specifies the Serving Numbering Plan Area associated with the RONI calls originating on the trunk.

Datafilling table TRKGRP(TOPSVL)

The following table shows the datafill specific to TOPS Call Processing Features (Administration) for table TRKGRP(TOPSVL). Only those fields that apply directly to TOPS Call Processing Features (Administration) are shown. For a description of the other fields, refer to the data schema section of this document.

Datafilling table TRKGRP(TOPSVL)

Field	Subfield or refinement	Entry	Explanation and action
GRPTYP		TOPSVL	The TOPS Voice Link Trunk Group (TRKGRP[TOPSVL]) This table provides voice links to external applications such as AABS.

Datafill example for table TRKGRP(TOPSVL)

The following example shows sample datafill for table TRKGRP(TOPSVL).

MAP display example for table TRKGRP(TOPSVL)

```
CLLI        GRPINFO
_____________________________________________

VSNTRNK     TOPSVL 31 NPDGRP NCRT MIDL
```

Datafilling table TOPSDISP

The following table shows the datafill specific to TOPS Call Processing Features (Administration) for table TOPSDISP. Only those fields that apply directly to TOPS Call Processing Features (Administration) are shown. For a description of the other fields, refer to the data schema section of this document.

Datafilling table TOPSDISP

Field	Subfield or refinement	Entry	Explanation and action
DISP_NO		1-31	Display Number. This is the instructional display number pointed to by the DISPLAY field in the TRKGRP table.
INSTRUCT		alphanumeric	Instructional Data. This field contains the instructional display that appears on the TOPS screen display after the CLG NUMBER display.

Datafill example for table TOPSDISP

The following example shows sample datafill for table TOPSDISP.

MAP display example for table TOPSDISP

```
DISP_NO          INSTRUCT
_____________________________
   1               XXXXXX
   2               YYYYYY
   3               ZZZZZZ
```

Datafilling table TOPSPOS

The TOPS Position (TOPSPOS) table lists the positions that require two trunk circuits (one voice, one data), and identifies the trunk circuit locations. The In-Charge, Assistance, and Operator Positions are assigned in this table. When assigning the Operator Positions, specify the types of calls that the position handles (general, transfer one, or transfer two). This table also lists the Traffic Office number to which the position belongs.

The following table shows the datafill specific to TOPS Call Processing Features (Administration) for table TOPSPOS. Only those fields that apply directly to TOPS Call Processing Features (Administration) are shown. For a

TOPS Call Processing Features (Administration) (continued)

description of the other fields, refer to the data schema section of this document.

Datafilling table TOPSPOS

Field	Subfield or refinement	Entry	Explanation and action
PMTYPE			This field now includes TMS as a valid PM type.
VCCKT			This field now includes TMS as a valid voice circuit.
If PMTYPE=TMS, the following subfields apply:			
TMSNO			This field specifies the TMS on which the voice circuit exists. The range of values is 0-255.
TMSCKTNO			This field specifies the P-side port number of the voice circuit. The range of values is 0-19.
TMSCKTTS			This field specifies the channel number of the voice circuit. The range of values is 1-24.
CNTRLR			This field is now a selector field, and also includes TMSTPC as a valid controller type. If CNTRLR is NT4X71 or TPC, the fields DTCKT, DTGRP, and PROTOCOL are subfields of CNTRLR.
If CNTRLR is TMSTPC, the following subfields apply:			
TPCNO			This field specifies the TPC number. The range of values is 0-254.
MPNO			This field specifies the HSLI card on the TPC to which the TOPS MP is configured. These cards are numbered from left to right on a TPC shelf. The range of values is 0-3.

Datafill example for table TOPSPOS

The following example shows sample datafill for table TOPSPOS.

TOPS Call Processing Features (Administration) (continued)

MAP display example for table TOPSPOS

```
POSNO
           VCCKT  VCPDGRP  CARDCODE
                        POSAREA
                   CNTRLR
_____________________________________________________
100
    TM8    0  24   NPDGRP  2X722A
             OPR 1 TASERV $ GEN XFR1 XFR2 $
NT4X71     TM8     0 25 NPDGRP   BELL108
101
    TM8    0  26   NPDGRP    2X722A
                    IC 1 TASERV $
NT4X71  TM8     0 27 NPDGRP   BELL108
312
    DTC 0  3  13   NPDGRP    DS1SIG
                    OPR 2 TASERV $ XFR2 $
NT4X71    DTC 0   3 14 NPDGRP   BELL202
```

Datafilling table OPRDAT

The TOPS Operator Data (OPRDAT) table lists all the operator numbers that have been assigned. Only operators with a number listed in this table can log

TOPS Call Processing Features (Administration) (continued)

in to a TOPS position. This table determines whether an operator can accept transfer calls.

Datafilling table OPRDAT

Field	Subfield or refinement	Entry	Explanation and action
OPRNUM		0-9997	Existing operator numbers may have to be modified so that each operator with access to the same ORDB has a unique number assigned. This may, in turn, require an increase in parameter TOPS_MAX_OPERATOR_NUM. Operator numbers are assigned through Force Management, and stored in table OPRDAT in a standalone TOPS switch or TOPS OC Host. With BR21462 - Increase OPR ID Range, the datafillable range of TOPS operator numbers is increased from 0-3099 to 0-9997. This affects tables OPRDAT and OPRCMPLX, and office parameter TOPS_MAX_OPERATOR_NUM. However, if the office is a DMS-250 office, then the range is 0-4095 for TOPS_MAX_OPERATOR_NUM and 1-4095 for tables OPRDAT and OPRCMPLX. To increase the value of TOPS_MAX_OPERATOR_NUM, it is no longer necessary to first delete all tuples from tables OPRDAT and OPRCMPLX. The value in TOPS_MAX_OPERATOR_NUM can be changed and new tuples added immediately to the tables. The size of the affected table is updated automatically when the new tuples are added. Due to the increase in the range, the nil operator number used in EBAF AMA is now 9999 instead of 3101. Refer to AF1726 (TOPS EBAF, OSB00101). The value 9998 is used internally (as was 3100 before the increase), so it is not a valid operator number.

Datafilling table SERVICES

The SERVICES Table allows the Operating Company to identify the vendor servicing their Directory Assistance (DA) calls.

TOPS Call Processing Features (Administration) (continued)

Prior to this feature, DA and Intercept capabilities existed as a single service: DA service. This feature breaks them into two distinct services by adding a tuple to the SERVICES table. This tuple specifies the vendor and the data link type that service intercept calls.

Datafilling table SERVICES

Field	Subfield or refinement	Entry	Explanation and action
INDEX			This field's range of values is now 1-3, to include Intercept Service.
SERVICE			This field's range of values now includes INTCSERV.
LSDBID			This field's range of values is 0-9999. This field is a refinement for DASERV and INTCSERV, and specifies the listing services database identifier used by the DASERV and INTCSERV. The value INTCSERV cannot be datafilled in table SERVICES in BCS28; it is enabled in a future software release.

Datafill example for table SERVICES

The following example shows sample datafill for table SERVICES.

MAP display example for table SERVICES

```
INDEX              SERVDATA
_____________________________________
   1       TASERV
   2       DASERV CCI MPC 2138
```

Datafilling table TOPSVNIN

The TOPS Virtual Node Inventory (TOPSVNIN) table contains protocol and data link information for external applications such as automated alternate billing service (AABS).

Datafill example for table TOPSVNIN

The following example shows sample datafill for table TOPSVNIN.

TOPS Call Processing Features (Administration) (continued)

MAP display example for table TOPSVNIN

```
INDEX    XAPLLN    PROTOCOL    DATALINK    LINKDATA
_____________________________________________________
1        AABS         TABS         MPC     TRUNK TOPSVSNVL
```

Datafilling table TOPS

The Digit Translation Routing to the Traffic Operator Position System (TOPS) table is used by TOPS when translation of dialed digits from another data table points to the TOPS table. The TOPS table lists the following information for each call recognized by TOPS:

- the string to be displayed on the Operator Position screen to identify the call type
- whether the call is to be recorded on AMA tape

Datafilling table TOPS

Field	Subfield or refinement	Entry	Explanation and action
POSTYP			The POSTYPE field in table TOPS only ensures that an operator is selected who can handle calls from a given queue. This queue selection is independent of the service the operator is capable of providing. The Operating Company must ensure that the datafill in table TOPSPOS and OPRDAT agrees with the datafill in table TOPS. That is, all operators assigned a queue in table TOPS must be capable of providing the service type specified in table TOPS.

Datafill example for table TOPS

The following example shows sample datafill for table SERVICES.

MAP display example for table TOPS

```
CO    SEL       HEADER       NOAMA       POSTYPE      SERVTYP
_____________________________________________________________
411   C           DA           N           XFR1       INTCSERV
```

Datafilling table TOPSDEV

The following table summarizes the BCS28 changes for table TOPSDEV. Refer to the data schema section of this document for a complete description of table TOPSDEV.

Datafilling table TOPSDEV

Field	Subfield or refinement	Entry	Explanation and action
CNTRLR			CNTRLR is now a selector field. The range of values now includes TMSTPC. TMSTPC cannot be datafilled in BCS28; it is enabled in a future software release.
MEMVAR			MEMVAR is now a subfield of field CNTRLR if CNTRLR is TPC or NT4X71.
CARDCODE			CARDCODE is now a subfield of field CNTRLR if CNTRLR is TPC or NT4X71.
PROTOCOL			PROTOCOL is now a subfield of field CNTRLR if CNTRLR is TPC or NT4X71.
TPCNO			TPCNO is a subfield of CNTRLR if CNTRLR is TMSTPC. The range is 0-256.
MPNO			MPNO is a subfield of CNTRLR if CNTRLR is TMSTPC. The range is 0-3.

Datafilling table BCCODES

The Bellcore Call Codes (BCCODES) table contains the call codes used by the TOPS Expanded Bellcore AMA Format (EBAF).

The following table shows the datafill specific to TOPS Call Processing Features (Administration) for table BCCODES. Only those fields that apply directly to TOPS Call Processing Features (Administration) are shown. For a

TOPS Call Processing Features (Administration) (continued)

description of the other fields, refer to the data schema section of this document.

Datafilling table BCCODES

Field	Subfield or refinement	Entry	Explanation and action
CODES			As of BCS28, there are 14 additional call codes that can be entered in table BCCODES. These are the call codes used by TOPS Expanded Bellcore AMA Format (EBAF).

Datafill example for table BCCODES

The following example shows sample datafill for table TOPSVNIN.

MAP display example for table BCCODES

```
CALLTYPE        CODES
_____________________________________________
TOPS            010  014  108  250  251
```

Datafilling table OPRCMPLX

The Operator Complex/Unit ID (OPRCMPLX) table obtains the complex/unit ID for a given operator identification (ID) to support login to the IBM Directory Assistance System (DAS).

The following table shows the datafill specific to TOPS Call Processing Features (Administration) for table OPRCMPLX. Only those fields that apply directly to TOPS Call Processing Features (Administration) are shown. For a

description of the other fields, refer to the data schema section of this document.

Datafilling table OPRCMPLX

Field	Subfield or refinement	Entry	Explanation and action
OPRNUM		0-9997	With BR21462 - Increase OPR ID Range, the datafillable range of TOPS operator numbers is increased from 0-3099 to 0-9997. This affects tables OPRDAT and OPRCMPLX, and office parameter TOPS_MAX_OPERATOR_NUM. However, if the office is a DMS-250 office, then the range is 0-4095 for TOPS_MAX_OPERATOR_NUM and 1-4095 for tables OPRDAT and OPRCMPLX. To increase the value of TOPS_MAX_OPERATOR_NUM, it is no longer necessary to first delete all tuples from tables OPRDAT and OPRCMPLX. The value in TOPS_MAX_OPERATOR_NUM can be changed and new tuples added immediately to the tables. The size of the affected table is updated automatically when the new tuples are added. Due to the increase in the range, the nil operator number used in EBAF AMA is now 9999 instead of 3101. Refer to AF1726 (TOPS EBAF, OSB00101). The value 9998 is used internally (as was 3100 before the increase), so it is not a valid operator number.
CPLXNUM and UNITNUM		0-10 and 0-14	Also in table OPRCMPLX, fields CPLXNUM and UNITNUM allow a larger range of values for increased flexibility. Although the ranges have been increased in fields CPLXNUM and UNITNUM, the increased range should not be used unless the external DA systems, which utilize these values, are updated to handle the new ranges.

Datafill example for table OPRCMPLX

The following example shows sample datafill for table OPRCMPLX.

TOPS Call Processing Features (Administration) (continued)

MAP display example for table OPRCMPLX

```
OPRNUM   CPLXNUM    UNITNUM     MAPRQD      DASOPRID
_____________________________________________________
  1         2          3          Y           41
```

Datafilling table RTSNT

The following table shows the datafill specific to TOPS Call Processing Features (Administration) for table RTSNT. Only those fields that apply directly to TOPS Call Processing Features (Administration) are shown. For a description of the other fields, refer to the data schema section of this document.

Datafilling table RTSNT

Field	Subfield or refinement	Entry	Explanation and action
			The Return to Service Nodes Types (RTSNT) table improves the method by which system-busied nodes and links are returned to service.

Datafill example for table RTSNT

The following example shows sample datafill for table RTSNT.

MAP display example for table RTSNT

```
NODETYPE      QMAX      DEFAULT
_____________________________
CPU_NODE        2          Y
```

Datafilling table RTSALGO

The following table shows the datafill specific to TOPS Call Processing Features (Administration) for table RTSALGO. Only those fields that apply directly to TOPS Call Processing Features (Administration) are shown. For a

description of the other fields, refer to the data schema section of this document.

Datafilling table RTSALGO

Field	Subfield or refinement	Entry	Explanation and action
			The Return to Service Algorithm (RTSALGO) table improves the auditing algorithm by which system-busied nodes and links are returned to service.

Datafill example for table RTSALGO

The following example shows sample datafill for table RTSALGO.

MAP display example for table RTSALGO

```
RTS_BRANCH          RTSALGO_VECTOR
_____________________________________
DEFAULT_BRANCH      $
```

Translation verification tools

TOPS Call Processing Features (Administration) does not use translation verification tools.

SERVORD

TOPS Call Processing Features (Administration) does not use SERVORD.

TOPS Call Processing Features (Billing)

Ordering codes

Functional group ordering code: OSB00101

Functionality ordering code: not applicable

Release applicability

TOPS15 and up

Prerequisites

To operate, TOPS Call Processing Features (Billing) requires the following:

- Functionality BAS Generic, BAS00003
- Table TOPSFTR paramter TOPS_ON_OFF_SWITCH = Y

Description

This functionality is provided by the following features:

Feature number	Feature name
BV0309	Automatic Collect
BV0324	Automatic No AMA
BV0291	Collect
BV0291	Credit Card
BV0316	Credit Request
BV0311	Dial Rate
BR0335	Domestic Billing Restrictions
BV0363	Person to Person
BV0310	Person to Person Callback
BV0295	Special Billing
BV0291	Station to Station
BV0291	Third Number
BV0553	Toll Free Calls
BR14625	Originating NPA in Originating Number Field of AMA

TOPS Call Processing Features (Billing) (continued)

Feature number	Feature name
UT65885	NO AMA key affects routing
BK01010	Added functionality to TOPS module 104
BK01510	Added functionality to TOPS module 306 (OLIP)
59006865	MD Code Removal and ReEngineering (TOPS12)
590095068	New parm TOPS11_DEVICE_ ENHANCEMENTS (TOPS11)

BV0309 - Automatic Collect

The Automatic Collect feature provides the Automatic Collect (AUTO COL) key on the Operator Position keyboard. This key class charges a call as automatically collect to the called telephone.

The TOPS Real-Time Enhancements feature automatically class charges 800 and Zenith calls as automatic collect calls. Thus, the use of the AUTO COL key is no longer required for handling these types of calls.

BV0324 - Automatic No AMA

The Automatic No AMA feature automatically displays the elapsed conversation time for calls that are manually ticketed or held on a loop. No AMA records are generated for these calls.

BV0291 - Collect

The Collect feature allows a calling party to place a call that is paid for by the called party. On operator announcement of a collect call, the called party has the right to refuse acceptance of charges in advance or when queried by an operator.

The Billed Number Screening (BNS) feature allows the operating company to designate those lines that do not accept collect calls. If this feature is present, the operator does not have to determine whether the called party accepts the charges for a collect call. This check is performed automatically by the software.

BV0291 - Credit Card

The Credit Card feature allows a subscriber to place a calling card call with or without operator assistance. The calling card number is verified, and if acceptable, the call is allowed to complete.

TOPS Call Processing Features (Billing) (continued)

BV0316 - Credit Request

The Credit Request feature allows subscribers calling from coin or from non-coin stations to contact the operator to request credit for a call when network trouble is encountered, such as for a wrong number or for poor transmission.

BV0311 - Dial Rate

The Dial Rate feature provides the DIAL RATE key that allows a call to be charged as if it was completed by the subscriber, even though the call was actually completed by the operator.

The keying sequence for class charging a call as a dial rate call was STA PD+DIAL RATE+POS RLS. However, the TOPS Real-Time Enhancements feature automatically class charges dial rate calls as station paid (STA PD); thus the STA PD key no longer has to be pressed.

BR0335 - Domestic Billing Restrictions

The Domestic Billing Restrictions feature restricts billing of overseas calls and of calls to specific regions reached using the North American dialing plan.

BV0363 - Person to Person

The Person to Person feature allows an operator, at the request of a subscriber, to verify that a particular person, extension, or department can be reached before the call is completed and billed.

BV0310 - Person to Person Callback

The Person to Person Callback feature allows a calling party to ask an operator to initiate a call to a person or to a specified telephone number. If the person is not available, the calling party can leave a message instructing the called party to contact the originating operator by using a specific number. The operator then calls the calling party back.

BV0295 - Special Billing

The Special Billing feature consists of feature BV0291, Credit Card and Third Number, that is described in this document.

BV0291 - Station to Station

The Station to Station feature allows the subscriber to speak to anyone who answers the telephone of the called number. The subscriber does not say whether he wants to talk to a particular person. The subscriber simply asks to be connected and does not request that the call be charged to a number other than his own.

TOPS Call Processing Features (Billing) (continued)

BV0291 - Third Number

The Third Number feature allows a subscriber to charge a call to a third number (e.g., a number different from the called or calling number). The party answering at the third number has the right to refuse acceptance of charges in advance or when queried by the operator.

BV0553 - Toll Free Calls

The Toll Free Calls feature or 800 service (INWATS) is a form of inward-only, station-to-station long distance service. Toll free calls permit a called party to receive calls at no cost to the calling party from points within subscribed service areas over the Direct Distance Dialing (DDD) network.

BR14625 - Originating NPA in Originating Number Field of AMA

Ensure correct population of Originating NPA and Originating Number field of certain TOPS AMA records when just an NPA and NXX are present for a calling number.

UT65885 - NO AMA key affects routing

The NO AMA key uses the NPA from table OPRTRANS, not the NPA from table TRKGRP in routing a call. The NO AMA key is provided by feature BV0324, presented in this package description.

BK01010 - Added functionality to TOPS module 104

This activity allows module 104 to be appended to TOPS billing records produced in pre-EBAF phase 2 TOPS offices. This new capability is enabled on a per trunk group basis.

BK01510 - Added functionality to TOPS module 306 (OLIP)

This PRSDOC allows appending module 306 with Originating Line Information Parameter (OLIP) to TOPS Bellcore format billing records. Previously module 306 was only used to append Special Line Traffic ANI (SLT ANI) information to TOPS Bellcore format billing records.

50095068 - New parameter TOPS11_DEVICE_ENHANCEMENTS

In TOPS11, table TOPSPARM new parameter TOPS11_DEVICE_ENHANCEMENTS controls whether the calling number appears in the billing records output by TOPS autoquote (AQ), voice quote (VQ), dial-up autoquote (DUAQ), and record devices.

Operation

BV0309 - Automatic Collect

The automatic collect key class charges a call as automatically collect to the called telephone. Some businesses have a special number that subscribers can use. These calls are automatically collect, since the business has arranged with

the operating company to pay for them. The AUTO COL key class charges these special calls.

The Auto Collect class charge is automatically displayed for translated numbers.

BV0324 - Automatic No AMA

Automatic Message Accounting (AMA) is a facility that automatically records significant call details so the subscriber can be properly billed for toll calls. Machine timing automatically displays the elapsed conversation time on calls manually ticked and held on loop. The NO AMA control key discontinues or prevents AMA billing.

The NO AMA key uses the NPA from table OPRTRANS, not the NPA from table TRKGRP in routing a call. Refer to PRSDOC UT65885 in this package description.

Note: The above description describes the NO AMA key, not the automatic NO AMA associated with OGT, inward, or SA calls.

BV0291 - Collect

A collect call is when the calling party informs a TOPS operator that he wants the call charged to the called party. Like a paid call, a collect call can also be classed either person or station.

For station collect calls, the subscriber asks to be connected and the called party pay for the call. For person collect calls, the subscriber asks to be connected to a specific person or place and the called party pay for the call.

Billed Number Screening (BNS) is a feature that allows a subscriber to designate, through a nationwide data base system, specific line numbers that do not accept collect calls. Any call class charged as collect, or as a third number, initiates a BNS query. The query indicates on the CRT display whether the call is a non-working number, a public telephone number, or whether the call is accepted or denied. If BNS is not available, the operator must perform a manual check on collect calls as locally directed. For example, contacting Directory Assistance for the called number.

BNS also provides a Public Telephone Check (PTC), which allows operating companies to enter all public telephone numbers in a data base system. The PTC data base is automatically accessed when the call is class charged collect. An alert is given to the operator indicating collect and third number billing should not be applied to the call. When the subscriber asks the operator to charge the call to a special number (calling card number or third telephone

TOPS Call Processing Features (Billing) (continued)

number), he is making a special calling call. A special calling call can be classed either station or person.

The station collect (STA COL) key class charges a collect call under the following conditions:

- Calling party does not request to speak to a specific person.
- Calling party requests that the called party pay for the call.
- Called party is paying for the call, but does not request any special billing arrangements.

The person collect (PER COL) key class charges a collect call under the following conditions:

- Calling party requests to speak to a specific person.
- Calling party requests that the called party pay for the call.
- Called party is paying for the call but does not request any special billing arrangements.

BV0291 - Credit Card

Credit card service is a billing option that allows the subscriber to charge calls to a 10-digit account number, which is either a line or a special billing number. The calling card is used with a 4-digit Personal Identification Number (PIN) to comprise the 14-digit calling card number. Charges are included in the monthly bill of the subscriber.

The following are related to the use of Credit Cards:

- Calling Cards are accepted on calls originating within the United States or other places as specified in the Position Information.
- Subscribers calling the United States from an overseas point other than those specified previously use the International Calling Card format.
- Calling Card numbers are acceptable billing on both intra-LATA and inter-LATA calls if they pass the validation checks

International Calling Card

Many telephone companies issue subscribers an international number for use when placing Calling Card calls from overseas to the United States or to certain other countries. The format is:

- United States country code 1
- international code letter for the current year

- 10-digit billing number
- designated check digit.

Subscriber dialed Mechanized Calling Card Service (MCCS)

MCCS provides a subscriber the ability to dial billing information without the assistance of an operator. From certain types of telephones, the subscriber can dial an access code, i.e., 0 or 01, plus the called number. In response to an alert tone or announcement, the subscriber dials a 14-digit Calling Card number or 4-digit PIN. The billing number is automatically validated and the call is outpulsed.

During automated processing, if the subscriber is unable to enter the calling card number correctly, the subscriber is prompted to redial. If the subscriber fails more than a predetermined number of times, a TOPS operator is attached to assist the subscriber, or the call is disconnected.

Automatic calling card validation

When the operator keys the billing number a query is made to the DMS switch and then to the nationwide Billing Validation Center (BVC) data base. It takes approximately one second for the BVC to reply, at which time the status of the Calling Card is displayed to the operator.

Operator assisted MCCS

The following are cases in which Calling Card billing requires operator assistance:

- The subscriber elects not to dial the Calling Card, does not know how to do so, or requires assistance for some other reason such as a person call.
- The call is 0-, 0+ coin, or 0+ hotel.
- The originating station (telephone) or local billing office is not equipped for automated calling.
- The local office is not equipped for Automatic Number Identification (ANI).
- The call is an ANI-failure.

Refer to Exchange Alternate Billing Serivce (MCCS), ABS00101, for further information.

Inward Validation of Calling Cards

The traffic office can act as a host for Inward validation of Calling Card numbers for operators in offices not equipped for MCCS.

TOPS Call Processing Features (Billing) (continued)

Calling Card Validity Checks

After a class charge PER/STA SPL CLG or PER/STA SPL CLD key is pressed and the calling card number has been entered, the equipment provides an immediate validity check for the following:

- Proper number of digits
- Valid first four digits
  - — Valid NPA (4th digit greater than 1)
  - — Valid RAO (4th digit equal to 1 or 0)
- Presence on hot list of locally identified fraudulent numbers.

Number fails screening: If the number fails to pass the hot list check, the digits are displayed steady and HOT is displayed in flashing mode at the Operator Position CRT.

Number passes screening: If the Calling Card number conforms to the format specified, the equipment outpulses the number to the BVC data base system for another validity check. The data base determines whether the billing number is a Valid, Invalid, Restricted, or Unrestricted Calling Card.

Office Routing Code 1160

The office routing code 1160 reaches an inward operator for validation of calling card numbers.

Office Routing Code 1161/1162

The office routing code 1161 or 1162 reaches a data base that provides a recorded announcement with the results of the validity check after the TOPS operator keys in the number.

BV0316 - Credit Request

The credit request feature enables coin and noncoin subscribers to access TOPS operators and request credit on a call that encountered network trouble, such as a wrong number, poor transmission, or cutoff.

Credit allowance

Wrong Number: The TOPS operator cancels calls identified by a subscriber as wrong number if the conversation length is brief. The TOPS operator may also cancel timing (if a recall), may adjust billable conversation time to compensate for initial charges (if connection is made), or may cancel charges (if no connection is requested).

TOPS Call Processing Features (Billing) (continued)

Cutoff: The TOPS operator makes an adjustment of one minute for each cutoff occurrence. This adjustment allows for the subscriber's inconvenience and time required to begin the conversation again.

Poor transmission: The TOPS operator makes a standard adjustment of one minute for each occurrence of poor transmission. When a subscriber claims more than the standard 1-minute credit, proceed as locally directed. For example, refer the subscriber to the Service Assistant.

Network Trouble: A subscriber who encountered network trouble on a call can dial a special number, a 3-(N11) or 10-digit (800) number, to reach the credit operator. The TOPS operator is the primary system interface and the user's only access to this service. The subscriber provides the call details needed by the TOPS operator to record a credit request.

Call Details

Recording call details on AMA tape: Normally, the TOPS operator records the following information to identify the call to which the credit applies:

- called number
- class charge.

When appropriate, the TOPS operator also records the following details on the AMA tape.

- calling number
- bill-to-third number
- calling card number
- room identification
- dial rate indication.

Requests for credits are a source of trouble report records and can be made for any type of billable call. To help clear network troubles when serving subscriber-originated credit request calls, the operator initiates an associated trouble report as part of the credit request information.

Hotel calls: Credit adjustments on calls from hotel telephones are printed on the traffic office or HOBIC TTY for quoting to hotels as well as being entered on AMA tape. Hotels with their own rating system do not receive TOPS credit adjustments because there is no operator entry at the hotel.

TOPS Call Processing Features (Billing) (continued)

BV0311 - Dial Rate

The DIAL RATE key is one of the class charge keys on the Operator Position keyboard and charges a call at the same rate the subscriber pays if the call was dialed directly.

BR0335 - Domestic Billing Restrictions

Domestic billing restrictions include the following restrictions:

- Credit Card Billing: Credit cards from a given region within the North American dialing plan:
  - — may not be billed to at all.
  - — may only be billed to when a call is made to the same region.

  Refer to BV0291 (Credit Card) for further information.
- Third Number Billing: Third numbers from a given region within the North American dialing plan:
  - — may not be billed to at all.
  - — may only be billed to when a call is made to the same region.

  Refer to BV0291 (Third Number) for further information.
- Collect Call Billing: Within a given region:
  - — both station and person collect calls are allowed.
  - — both station and person collect calls are denied.
  - — only person collect calls are allowed.

  Refer to BV0291 (Collect) for further information.
- Person Rate Billing: Within a given region, only person rate calls are allowed, and
  - — no station billing is allowed.

BV0363 - Person to Person

Person to person service is provided by an operator, at the request of the subscriber, to verify that a particular person, extension, or department is the recipient of the call.

If the called number answers, the operator requests the desired party. If the party is immediately available, conversation begins. If the called party is available, but not immediately, the calling subscriber may decide to wait on the line. If the calling subscriber declines to hold, the call is canceled.

TOPS Call Processing Features (Billing) (continued)

BV0310 - Person to Person Callback

Person to Person Callback is a service whereby a subscriber requests a TOPS operator to initiate a call to a specified telephone number or person. If the specified person is not available, the calling subscriber leaves a message for the called party to call the originating operator. The originating operator is identified by a number. When the called person calls the operator, he asks for the originating operator by quoting the operator number. The originating operator relays the message and connects the called party to the original calling party. The call is billed to the original calling party.

BV0295 - Special Billing

Special billing consists of the following features described in this document:

- BV0291 - Credit Card
- BV0291 - Third Number

BV0291 - Station to Station

Station to station billing occurs when the subscriber speaks to anyone who answers the telephone. The subscriber does not say if he wants to talk to a particular person or place.

BV0291 - Third Number

Third number billing is a billing option in which a call may be charged to an authorized line other than the originating or terminating line. The subscriber does not obtain acceptance of billing, the operator does. This verification is always done when coin originated but seldom done for other call originations. A call is classified as charged to a third telephone (rather than paid or collect), if the charge is transferred to a telephone other than the calling or called telephone.

Following are the types of numbers to which calls can be charged:

- At the request of either the calling or the called party, a charge can be transferred to a third telephone anywhere in the United States (including Alaska, Hawaii, Puerto Rico, and the U.S. Virgin Islands), or Canada.
- At the request of the called party, a charge can be transferred to a special billing number.
- A charge can also be transferred to a special billing number on Person Callback calls.
- If the third telephone is a coin telephone, the TOPS operator advises the subscriber that the charge cannot be billed to a coin telephone. The subscriber must then determine how he wants the call charged.

TOPS Call Processing Features (Billing) (continued)

BV0553 - Toll Free Calls

Toll Free calls (800 INWATS) is station-to-station long distance service. It permits a called subscriber to receive calls from within subscribed service areas over the DDD network, without cost to the calling party. Interstate and intrastate services are offered INWATS and is provided on one or more special access lines. A group of lines may be treated as one line for billing purposes. Charges for the service are based on the amount of time the INWATS facilities are used.

All toll free 1+ calls are handled without operator intervention.

BR14625 - Originating NPA in Originating Number Field of AMA Prior to BCS29

For calls incoming on TOPS trunk groups without the calling number (ONI and ANIFAIL), the Originating NPA and Originating Number fields on the AMA record are filled as follows:

- If NPANXXRQ=Y on TOPS TRKGRP:
  - — ORIG NPA = 000C.
  - — ORIG NUM = 0NPANXXC (NPANXX from ACTUALBC field in first entry for the trunk group in table TOPSBC).

    When NPANXX=Y, there is also an NPANXX display to the operator on ONI and ANIFAIL calls (derived from 1st entry for the CLLI in TOPSBC).
- If NPANXXRQ=N on TOPS TRKGRP:
  - — ORIG NPA = 000C.
  - — ORIG NUM = 0000000C.

    When NPANXXRQ=N, there is no NPANXX display to the operator on ONI and ANIFAIL calls.

The value of NPANXXRQ affects all ONI/ANIFAIL calls - those that go to TOPS and those that tandem through without operator intervention. The operator overwrites the ORIG NUM with the actual 7-digit calling number on calls that go to TOPS.

Change with BCS29 (not optional)

For calls incoming on TOPS trunk groups without the calling number (ONI and ANIFAIL), the Originating NPA and Originating Number fields on the AMA record are filled as follows:

- If NPANXXRQ=Y on TOPS TRKGRP:
  - — ORIG NPA = NPAC (NPA from ACTUALBC field in 1st entry for the CLLI in table TOPSBC).
  - — ORIG NUM = NXX0000C (NXX from ACTUALBC field in 1st entry for the CLLI in table TOPSBC).

    When NPANXX=Y, there is also an NPANXX display to the operator on ONI and ANIFAIL calls (derived from 1st entry for the CLLI in TOPSBC).
- If NPANXXRQ=N on TOPS TRKGRP:
  - — ORIG NPA = 000C.
  - — ORIG NUM = 0000000C.

    When NPANXXRQ=N, there is no NPANXX display to the operator on ONI and ANIFAIL calls.

The value of NPANXXRQ affects all ONI/ANIFAIL calls - those that go to TOPS and those that tandem through without operator intervention. The operator overwrites the ORIG NUM with the actual 7-digit calling number on calls that go to TOPS.

When a calling number is not available and the default NPA-NXX is taken from datafill, the study indicator field (byte 6) is set to 0. Refer to UG100983 in TOPS EBAF, OSB00101.

Verify as follows.

ONI 950-1XXX call for NOSERVed carrier:

- Make a 950-1XXX ONI call, where carrier XXX is marked NOSERV in table TOPEACAR, from a TOPS trunk.
- Set field NPANXXRQ to Y in table TRKGRP for the originating TOPS trunk.
- Complete the call.
- The NPA and NXX from table TOPSBC should populate the Originating NPA and Originating Number fields for the AMA record, respectively.

TOPS Call Processing Features (Billing) (continued)

Example record - ONI 950-1XXX Call for NOSERVed Carrier

```
HEX ID:AA  STRUCTURE CODE:00734C  CALL CODE:251C
SENSOR TYPE:036C  SENSOR ID:0000000C  REC OFFICE TYPE:036C
REC OFFICE ID:0000000C  DATE:60102C  TIMING IND:00000C
STUDY IND:0200030C  ANSWER:0C  SERVICE OBSERVED:0C
OPER ACTION:0C  SERVICE FEATURE:000C ORIG NPA:613C
ORIG NUMBER:2390000C  OVERSEAS IND:1C  TERM NPA:00613C
TERM NUMBER:9501222C  CONNECT TIME:1836260C
ELAPSED TIME:000000038C  OPERATOR NUMBER:0003101C
OPERATOR WORK TIME:000000000C  IC/INC PREFIX:02221C
CC DATE:60102C  CC TIME:1836260C  ELAPSED CC:000000038C
IC/INC EVENT STATUS:005C  TRUNK GROUP NUMBER:00412C
ROUTING INDICATOR:1C  DIALING INDICATOR:3C  ANI INDICATOR:1C
```

ONI call routed from the pre-translator with a T Selector:

- Make an ONI call, where the called number is routed from pretranslations with a T selector, from a TOPS trunk.
- Set field NPANXXRQ to Y in table TRKGRP for the originating TOPS trunk.
- Complete the call.
- The NPA and NXX from table TOPSBC should populate the Originating NPA and Originating Number fields of the AMA record, respectively.

Example record - ONI Call Routed from Pretranslator with a T Selector

```
HEX ID:AA  STRUCTURE CODE:00700C  CALL CODE:006C
SENSOR TYPE:036C  SENSOR ID:0000000C  REC OFFICE TYPE:036C
REC OFFICE ID:0000000C  DATE:60102C  TIMING IND:10000C
STUDY IND:0200000C  ANSWER:0C  SERVICE OBSERVED:0C
OPER ACTION:0C  SERVICE FEATURE:000C  ORIG NPA:613C
ORIG NUMBER:2390000C  OVERSEAS IND:0C  TERM NPA:00212C
TERM NUMBER:2201234C  CONNECT TIME:1839517C
ELAPSED TIME:000000438C  OPERATOR NUMBER:0003101C
OPERATOR WORK TIME:000000000C
```

UT65885 - NO AMA key affects routing

The NO AMA key uses the NPA from table OPRTRANS, not the NPA from table TRKGRP in routing a call. The NO AMA key is provided by feature BV0324, presented in this package description.

TOPS Call Processing Features (Billing) (continued)

BK01010 - Added functionality to TOPS module 104

This activity allows module 104 to be appended to TOPS billing records produced in pre-EBAF phase 2 TOPS offices. This new capability is enabled on a per trunk group basis.

In BCS32, Bellcore mandated the removal of Trunk Network Number (TNN). To give equivalent information the new module 104, `Trunk Identification," was defined. Feature NC0248 (Terminating Trunk Group Usage) removed TNN and added the capability to append module 104 for all Bellcore format AMA records except those produced by TOPS. PRSDOC BR22977 (TOPS EBAF) added this capability to TOPS EBAF phase 2 records. TOPS pre-EBAF phase 2 records were restricted from having modules appended to them until Bellcore recently approved appending module 104. This activity adds this new capability.

Module 104 is appended to TOPS billing records when the trunk group CLLI is datafilled in table AMATKOPT with the option TRKINFO.

MAP display example for table AMATKOPT

```
    CLLI          OPTIONS
_____________________________________________________________
  TOPSIC        (TRKINFO)$
```

Following is an example billing record with module 104 appended:

Example record - billing record with module 104 appended

```
HEX ID::AA STRUCTURE CODE:40752C CALL CODE:192C
 SENSOR TYPE:036C SENSOR ID:0000000C REC OFFICE TYPE:036C
 REC OFFICE ID:0000000C DATE:01130C TIMING IND:00000C
 STUDY IND:0200000C SERVICE OBSERVED:0C ORIG NPA:613C
 ORIG NUMBER:2391111C CONNECT TIME:1107317C
 ELAPSED TIME:000000023C OPERATOR IDS:1020312009999C
 ACC OPERATOR WORK TIME:00210C SERVICE FEATURE:000C
 STATION SIGNALING IND:2C SCREENING CODE:000C
 CALLED NUMBER INPUT:2C CALLING NUMBER SOURCE:1C
 MODULE CODE:051C OVERSEAS IND:0C TERM NPA:00212C
 TERM NUMBER:2201111C COMPLETION IND:001C RATE IND:1C
 OSS CALL COMPLETION CONDITIONS:1111110C MODULE CODE:104C
 TRUNK FACILITY ID:104020001C MODULE CODE:000C
```

TOPS Call Processing Features (Billing) (continued)

BK01510 - Added functionality to TOPS module 306 (OLIP)

This PRSDOC allows appending module 306 with Originating Line Information Parameter (OLIP) to TOPS Bellcore format billing records. Previously module 306 was only used to append Special Line Traffic ANI (SLT ANI) information to TOPS Bellcore format billing records.

OLIP information is already appended to TOPS NT format billing records through tables TOPSBC and TOPSENTC. This capability is extended to TOPS Bellcore format records.

Only TOPS billing records produced on TOPS, RONI, ATC, IT, and IBN trunks are affected by this PRSDOC.

When the possibility of both SLT ANI information and OLIP information being placed in module 306 occurs, then SLT ANI information takes precedence and the OLIP information is not provided.

Non-TOPS trunk group types RONI, IT, ATC, and IBN - which produce TOPS Bellcore format billing records - have a default charge class in table TOPSBC of TOPS. This charge class can be changed to the desired value and this value indexes into table TOPSENTC to get the OLIP value.

The APPLYCHG subfield of ECANDCHG in table TOPSENTC is not used for Bellcore format TOPS records. This field can be set to either Y(es) or N(o) with no effect on the resulting record.

This module is only appended to records produced in phase number two EBAF.

Module 306 is appended when OLIP applies to the call but SLT ANI does not. Table TOPSBC must be datafilled with the trunk CLLI and the CHGCLSS (charge class) field must be set to the desired value. Table TOPSENTC must then be datafilled with the charge class value datafilled against the trunk in table TOPSBC. The desired line service value along with the charge value must be datafilled next. The line service value part of the ECANDCHG field is placed into module 306 as OLIP information when a call is made over the trunk group that is datafilled as above. Please note that the charge part of the ECANDCHG field can be set to Y(es) or N(o) but has no effect on whether module 306 is appended to the record. Following is example OLIP datafill.

TOPS Call Processing Features (Billing) (continued)

MAP display example for table TOPSBC

```
CLLI      BILLCODE LCANAME SCRNCL ACTUALBC CHGCLSS
_____________________________________________________
TBELLIC1    320    L32X    NSCR   613239   TOPS
```

MAP display example for table TOPSENTC

```
CHGCLASS ECANDCHG
_____________________________________________________
TOPS     02     N
```

The following is an example of a TOPS billing record that is produced by a call over a trunk member in the trunk group TBELLIC1 when a 0+ call is made.

Example record - 0+ call over a trunk member in trunk group TBELLIC1

```
HEX ID::AA STRUCTURE CODE:40752C CALL CODE:192C
SENSOR TYPE:036C SENSOR ID:0000000C REC OFFICE TYPE:036C
REC OFFICE ID:0000000C DATE:01130C TIMING IND:00000C
STUDY IND:0200000C SERVICE OBSERVED:0C ORIG NPA:613C
ORIG NUMBER:2391111C CONNECT TIME:1107317C
ELAPSED TIME:000000023C OPERATOR IDS:1020312009999C
ACC OPERATOR WORK TIME:00210C SERVICE FEATURE:000C
STATION SIGNALING IND:2C SCREENING CODE:000C
CALLED NUMBER INPUT:2C CALLING NUMBER SOURCE:1C
MODULE CODE:051C OVERSEAS IND:0C TERM NPA:00212C
TERM NUMBER:2201111C COMPLETION IND:001C RATE IND:1C
OSS CALL COMPLETION CONDITIONS:1111110C
MODULE CODE:306C OLIP:002C MODULE CODE:000C
```

A 1+ direct dialed call routed over TBELLIC1 produces the following record.

Example record - 1+ direct dialed call routed over TBELLIC1

```
HEX ID::AA  STRUCTURE CODE:00001C  CALL CODE:006C
SENSOR TYPE:036C SENSOR ID:0123456C  REC OFFICE TYPE:036C
REC OFFICE ID:0123456C DATE:11108C  TIMING IND:00000C
STUDY IND:0200000C CLD PTY OFF-HK:0C SERVICE OBSERVED:0C
OPER ACTION:0C  SERVICE FEATURE:000C  ORIG NPA:619C
ORIG NUMBER:3201111C  OVERSEAS IND:0C  TERM NPA:00201C
TERM NUMBER:2201111C  CONNECT TIME:0909535C
ELAPSED TIME:000000065C  MODULE CODE:306C OLIP:002C
MODULE CODE:000C
```

TOPS Call Processing Features (Billing) (continued)

Module 306 is also appended when both OLIP and SLT ANI information applies to a call. Suppose a call is routed over a member in the trunk group TBELLIC1 and that the above datafill for the tables TOPSBC and TOPSENTC apply. Also given that the SLT ANI ID datafill is as follows:

MAP display example for table OSSCAT

```
ANI    FORMAT  CLGSERV  REST     ROUTE
_____________________________________________________
 01       ANI  SPECIAL  NONE      N
```

MAP display example for table SLTANIID

```
SLTANI RBILCLAS ONEPLUS SLTAMA
_____________________________________________________
    01        0       Y      Y
```

This creates a condition where both SLT ANI and OLIP information apply to the call but only one of these values can be placed into the record. SLT ANI information is always placed into the record and the OLIP information is not. The following is an example of a billing record that is produced when a 0+ call is made and the ANI ID digits are 01.

Example record - 0+ call when ANI ID digits = 01

```
HEX ID::AA STRUCTURE CODE:40752C CALL CODE:192C
 SENSOR TYPE:036C SENSOR ID:0000000C REC OFFICE TYPE:036C
 REC OFFICE ID:0000000C DATE:01130C TIMING IND:00000C
 STUDY IND:0200000C SERVICE OBSERVED:0C ORIG NPA:613C
 ORIG NUMBER:2391111C CONNECT TIME:1107317C
 ELAPSED TIME:000000023C OPERATOR IDS:1020312009999C
 ACC OPERATOR WORK TIME:00210C SERVICE FEATURE:000C
 STATION SIGNALING IND:2C SCREENING CODE:000C
 CALLED NUMBER INPUT:2C CALLING NUMBER SOURCE:1C
 MODULE CODE:051C OVERSEAS IND:0C TERM NPA:00212C
 TERM NUMBER:2201111C COMPLETION IND:001C RATE IND:1C
 OSS CALL COMPLETION CONDITIONS:1111110C
 MODULE CODE:306C  OLIP:001C  MODULE CODE:000C
```

50095068 - New parameter TOPS11_DEVICE_ENHANCEMENTS

In TOPS11, table TOPSPARM new parameter TOPS11_DEVICE_ENHANCEMENTS controls whether the calling number appears in the billing records output by TOPS autoquote (AQ), voice quote

TOPS Call Processing Features (Billing) (continued)

(VQ), dial-up autoquote (DUAQ), and record devices. It also controls whether the calling number appears in charge adjust records generated on the hotel administration data system (HADS), VQ, or record devices. Charge adjust records appear as a result of a charge adjustment by the operator.

When the new parameter is set to N (the default value), the device output is the same as prior to TOPS 11. The calling number usually does not appear, but can appear in some cases such as a collect call billed to a hotel, or a charge adjustment not associated with an AQ or DUAQ device in table TOPSDEV or HOBICDEV.

When the new parameter is set to Y, the calling number appears on all billing and charge adjust records generated on these devices.

This parameter is present in all TOPS loads, whether North American or global (non-North American).

Following are several examples of TOPS device output with various call attributes set as described. The parameter DEVICE_OUTPUT_CR is an existing table TOPSPARM parameter which affects output in North American TOPS only. The parameter AQ_CLD_NUM_ON_NC is an existing office parameter in table OFCOPT.

TOPS Call Processing Features (Billing) (continued)

North American TOPS device output

Billing record examples:

- The following output is generated on an AQ or DUAQ device for a sent-paid hotel call. The parameters are as follows:

  — DEVICE_OUTPUT_CR = N

  — TOPS11_DEVICE_ENHANCEMENTS = N

```
0001 VER 000 201-220-7805      12/17 13:05   1   $0.23  $0.00
123
```

- The following output is generated on an AQ or DUAQ device for a sent-paid hotel call. The parameters are as follows:

  — DEVICE_OUTPUT_CR = N

  — TOPS11_DEVICE_ENHANCEMENTS = Y

```
0002 VER 001 619-322-7805        201-220-7805       12/17
13:07   1 $0.23  $0.00 123
```

- The following output is generated on an AQ or DUAQ device for a sent-paid hotel call. The parameters are as follows:

  — DEVICE_OUTPUT_CR = Y

  — TOPS11_DEVICE_ENHANCEMENTS = N

```
0006 VER 004 201-220-7805 12/17 13:12   1   $0.23  $0.00 123
```

- The following output is generated on an AQ or DUAQ device for a sent-paid hotel call. The parameters are as follows:

  — DEVICE_OUTPUT_CR = Y

  — TOPS11_DEVICE_ENHANCEMENTS = Y

```
0004 VER 002 619-322-7805       201-220-7805  12/17 13:10
1   $0.23  $0.00 123
```

- The following output is generated on an AQ or DUAQ device for a call billed to the calling party's calling card. The parameters are as follows:

  — DEVICE_OUTPUT_CR = N

  — TOPS11_DEVICE_ENHANCEMENTS = N

  — Table OFCOPT parameter AQ_CLD_NUM_ON_NC = Y

```
0004 VER 004 201-220-7805  12/21 06:10     123
```

- The following output is generated on an AQ or DUAQ device for a call billed to the calling party's calling card. The parameters are as follows:

— DEVICE_OUTPUT_CR = N

— TOPS11_DEVICE_ENHANCEMENTS = Y

— Table OFCOPT parameter AQ_CLD_NUM_ON_NC = Y

```
0000 VER 000 619-322-7805     201-220-7805    12/21 06:05
     123
```

- The following output is generated on a VQ or record device for a sent-paid hotel call. The parameters are as follows:

  — DEVICE_OUTPUT_CR = N

  — TOPS11_DEVICE_ENHANCEMENTS = N

```
0001 VER 000   <HOS0  201-220-7805      12171305   1 023 000
123   7805
```

- The following output is generated on a VQ or record device for a sent-paid hotel call. The parameters are as follows:

  — DEVICE_OUTPUT_CR = N

  — TOPS11_DEVICE_ENHANCEMENTS = Y

```
0002 VER 001  619-322-7805  <HOS0  201-220-7805  12171307
1 023 000   123   7805
```

- The following output is generated on a VQ or record device for a sent-paid hotel call. The parameters are as follows:

  — DEVICE_OUTPUT_CR = Y

  — TOPS11_DEVICE_ENHANCEMENTS = N

```
0006 VER 004  619-322-7805  <HOS0  201-220-7805  12171312
1 023 000   123   7805
```

- The following output is generated on a VQ or record device for a sent-paid hotel call. The parameters are as follows:

  — DEVICE_OUTPUT_CR = Y

  — TOPS11_DEVICE_ENHANCEMENTS = Y

```
0004 VER 002  619-322-7805  <HOS0  201-220-7805  12171310
1 023 000   123   7805
```

- The following output is generated on a VQ or record device for a call billed to the calling party's calling card. The parameters are as follows:

  — DEVICE_OUTPUT_CR = N

  — TOPS11_DEVICE_ENHANCEMENTS = N

  — Table OFCOPT parameter AQ_CLD_NUM_ON_NC = Y

TOPS Call Processing Features (Billing) (continued)

```
0004 VER 004    <NOS2 201-220-7805   12210610   1   123
     7805
```

- The following output is generated on a VQ or record device for a call billed to the calling party's calling card. The parameters are as follows:

  — DEVICE_OUTPUT_CR = N

  — TOPS11_DEVICE_ENHANCEMENTS = Y

  — Table OFCOPT parameter AQ_CLD_NUM_ON_NC = Y

```
0000 VER 000 619-322-7805    <NOS2 201-220-7805   12210605
  1    123       7805
```

Charge adjustment examples:

- The following output is generated on a HADS, VQ, or record device as a result of an operator performing a charge adjustmentl. The parameters are as follows:

  — DEVICE_OUTPUT_CR = N

  — TOPS11_DEVICE_ENHANCEMENTS = N

  In the first record, the calling number is associated with an AQ or DUAQ device. This association is datafilled in table DNSCRN or SPLDNID. In the second record, no such association is datafilled, so an acronym is not output.

```
0005 VER  *    CAOS0 201-220-7805    0916  0T1       25
   123    7805

0009 619-322-7805      CAOS0 201-220-7805     0957  0T1
   25    123       7805
```

- The following output is generated on a HADS, VQ, or record device as a result of an operator performing a charge adjustmentl. The parameters are as follows:

  — DEVICE_OUTPUT_CR = N

  — TOPS11_DEVICE_ENHANCEMENTS = Y

  In the first record, the calling number is associated with an AQ or DUAQ device. This association is datafilled in table DNSCRN or SPLDNID. In the second record, no such association is datafilled, so an acronym is not output.

```
0006 VER 619-322-7805    CAOS0 201-220-7805       0918  0T1
  25  123   7805

0013     619-322-7805    CAOS0 201-220-7805       1005  0T1
  25  123    7805
```

- The following output is generated on a HADS, VQ, or record device as a result of an operator performing a charge adjustmentl. The parameters are as follows:

  — DEVICE_OUTPUT_CR = Y

  — TOPS11_DEVICE_ENHANCEMENTS = N

  In the first record, the calling number is associated with an AQ or DUAQ device. This association is datafilled in table DNSCRN or SPLDNID. In the second record, no such association is datafilled, so an acronym is not output.

```
0008 VER  *    CAOS0 201-220-7805   0936  0T1     25  123
   7805

0014 619-322-7805       CAOS0 201-220-7805    1008  0T1
   25  123       7805
```

- The following output is generated on a HADS, VQ, or record device as a result of an operator performing a charge adjustmentl. The parameters are as follows:

  — DEVICE_OUTPUT_CR = Y

  — TOPS11_DEVICE_ENHANCEMENTS = Y

  In the first record, the calling number is associated with an AQ or DUAQ device. This association is datafilled in table DNSCRN or SPLDNID. In the second record, no such association is datafilled, so an acronym is not output.

```
0007 VER 619-322-7805     CAOS0 201-220-7805    0934  0T1
   25  123       7805

0012    619-322-7805      CAOS0 201-220-7805    1003  0T1
   25  123       7805
```

Global (non-North American) TOPS device output

This section contains device output generated in a global TOPS

environment. The parameter DEVICE_OUTPUT_CR in table TOPSPARM

does not affect global TOPS output; the output is presented as

if the parameter is always set to Y.

In these examples, the operator did not enter an A-party name, B-party name, nor a ticket number. Also, table TOPSPARM parameter NOTIFY_RECALL_OPTIONS is set to N. Different operator behavior or

TOPS Call Processing Features (Billing) (continued)

table TOPSPARM datafill would result in additional information included in the records.

Biling record examples:

- The following output is generated on an AQ or DUAQ device for a sent-paid hotel call. The parameter is as follows:

  — TOPS11_DEVICE_ENHANCEMENTS = N

```
0037 VER 000 78-05444666   01/05 15:48   1   $6   $0 123
```

- The following output is generated on an AQ or DUAQ device for a sent-paid hotel call. The parameter is as follows:

  — TOPS11_DEVICE_ENHANCEMENTS = Y

```
0039 VER 002  6-19-322-7805   78-05444666    01/05 15:50 1
$6    $0     123
```

- The following output is generated on an AQ or DUAQ device for a call billed to the calling party's calling card. The parameter is as follows:

  — TOPS11_DEVICE_ENHANCEMENTS = N

  — Table OFCOPT parameter AQ_CLD_NUM_ON_NC = Y

```
0038 VER 001 78-05444666     01/05 15:49   123
```

- The following output is generated on an AQ or DUAQ device for a call billed to the calling party's calling card. The parameter is as follows:

  — TOPS11_DEVICE_ENHANCEMENTS = Y

  — Table OFCOPT parameter AQ_CLD_NUM_ON_NC = Y

```
0040 VER 003 6-19-322-7805      78-05444666   01/05 15:51
```

- The following output is generated on an VQ or record device for a sent-paid hotel call. The parameter is as follows:

  — TOPS11_DEVICE_ENHANCEMENTS = N

```
0027 6-19-322-7805   <HOS0 78-05444666   01051520   1    6
   0 123       7805
```

- The following output is generated on an VQ or record device for a sent-paid hotel call. The parameter is as follows:

  — TOPS11_DEVICE_ENHANCEMENTS = Y

```
0026   6-19-322-7805   <HOS0 78-05444666    01051515  1
6   0 123       7805
```

- The following output is generated on an VQ or record device for a call billed to the calling party's calling card. The parameters are as follows:

  — Table OFCOPT parameter AQ_CLD_NUM_ON_NC = Y

  — TOPS11_DEVICE_ENHANCEMENTS = N

```
0033 HOL 011       <NOS2 78-05444666    01051537  1
    123       7805
```

- The following output is generated on an VQ or record device for a call billed to the calling party's calling card. The parameters are as follows:

  — Table OFCOPT parameter AQ_CLD_NUM_ON_NC = Y

  — TOPS11_DEVICE_ENHANCEMENTS = Y

```
0034 HOL 012 6-19-322-7805     <NOS2 78-05444666    01051539
1    123       7805
```

Charge adjustment examples:

- The following output is generated on a HADS, VQ, or record device as a result of an operator performing a charge adjustmentl. The parameter is as follows:

  — TOPS11_DEVICE_ENHANCEMENTS = N

  In the first record, the calling number is associated with an AQ or DUAQ device. This association is datafilled in table DNSCRN or SPLDNID. In the second record, no such association is datafilled, so an acronym is not output.

```
0032 HOL  *     CAOS0 78-05444666       1536  0T1      637
123       7805

0029 6-19-322-7805      CAOS0 78-05444666     1526  0T1
637  123       7805
```

- The following output is generated on a HADS, VQ, or record device as a result of an operator performing a charge adjustmentl. The parameter is as follows:

  — TOPS11_DEVICE_ENHANCEMENTS = Y

  In the first record, the calling number is associated with an AQ or DUAQ device. This association is datafilled in table DNSCRN or SPLDNID. In

TOPS Call Processing Features (Billing) (continued)

the second record, no such association is datafilled, so an acronym is not output.

```
0031 HOL 6-19-322-7805     CAOS0 78-05444666    1535  0T1
637  123        7805

0030    6-19-322-7805     CAOS0 78-05444666    1529  0T1
637  123        7805
```

Verification

The following procedure can be used to verify that the billing of a call is based on the type of call and the charge class allowed for the call.

1. Ensure that there is an active file for AMA recording routed over a trunk group.
2. Set up TOPS translations.
3. Make calls to a TOPS position and attempt to bill a call based on the type of call and the charge class allowed for the call.
4. Verify that the call completes successfully.

Translations table flow

The TOPS Call Processing Features (Billing) translation process is shown in the flowchart that follows.

TOPS Call Processing Features (Billing) (continued)

Table flow for TOPS Call Processing Features (Billing)

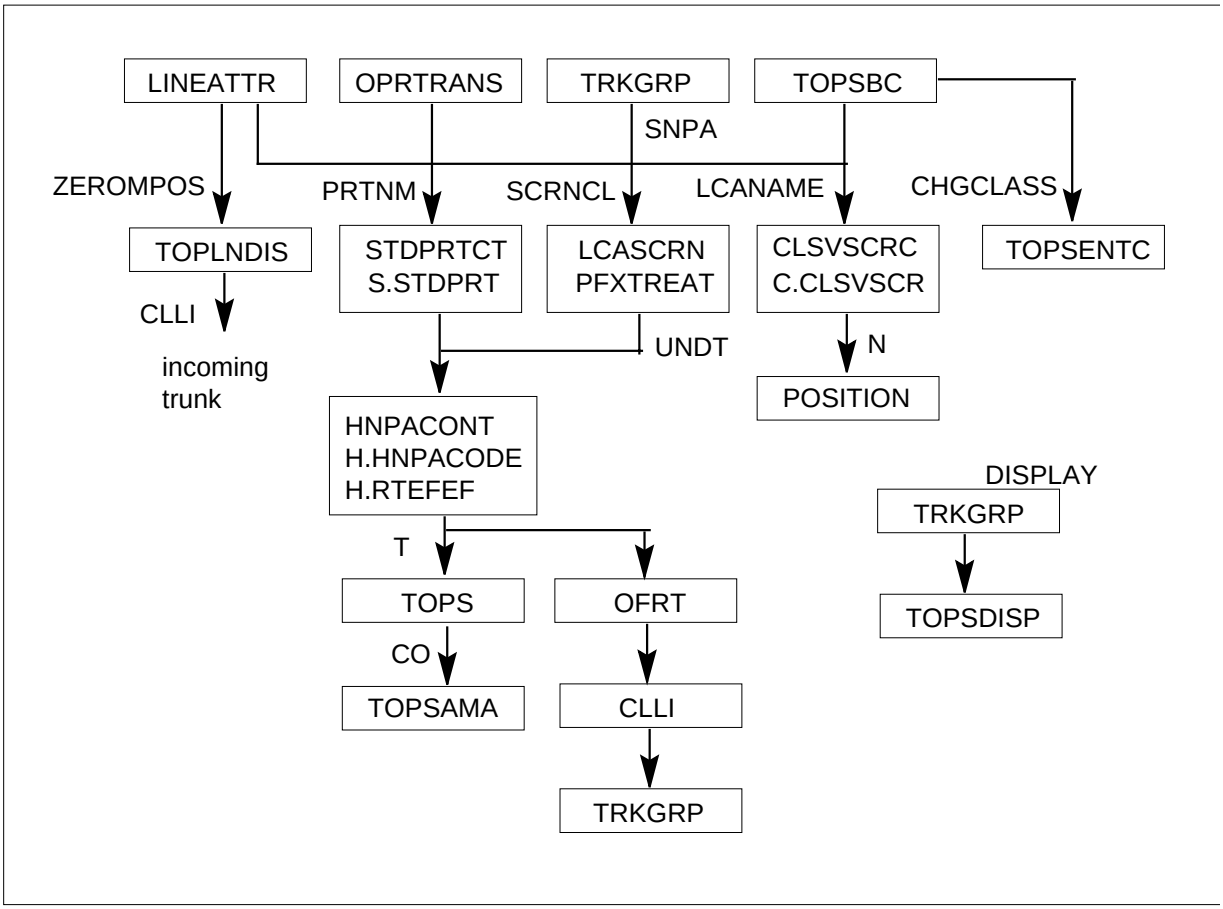

Limitations and restrictions

The following paragraphs discuss the limitations and restrictions that apply to TOPS Call Processing Features (Billing):

BR14625 - Originating NPA in Originating Number Field of AMA

The NPA and NXX taken from table TOPSBC may not be the true NPA and NXX of the calling number.

BK01010 - Added functionality to TOPS module 104

The tuple RECORD_ORIGINATING_TRK_GRP_NUM in table TOPAMAOP appends module 104 to TOPS records on a global basis in phase 2 EBAF. When it is enabled then all TOPS records has module 104 appended. This activity does not affect the use of this tuple.

This activity applies to TOPS billing records in the 700-799 structure code range. These records are produced when a 1 + direct dialed, non-operator,

TOPS Call Processing Features (Billing) (continued)

non-hotel, non-coin call that is routed over either a TOPS, IT, IBN, RONI, or ATC trunk.

Offices with BCS32 or BCS33 loads lose the capability to append TNN information to records without gaining the ability to append the equivalent information through module 104.

BK01510 - Added functionality to TOPS module 306 (OLIP)

When the possibility of both SLT ANI information and OLIP information being placed in module 306 occurs then SLT ANI information takes precedence and the OLIP information is not provided.

Non-TOPS trunk group types RONI, IT, ATC and IBN - which produce TOPS Bellcore format billing records - have a default charge class in table TOPSBC of TOPS. This charge class can be changed to the desired value and this value indexes into table TOPSENTC to get the OLIP value.

The APPLYCHG subfield of ECANDCHG in table TOPSENTC is not used for Bellcore format TOPS records. This field can be set to either Y(es) or N(o) with no effect on the resulting record.

This module appends to records produced in phase number two EBAF.

Interactions

The TOPS Billing Types category interacts with all existing features within the following features:

- TOPS ACD Features, OSB00101
- TOPS Call Processing Features (Call Processing), OSB00101

Activation/deactivation by the end user

TOPS Call Processing Features (Billing) requires no activation or deactivation by the end user.

Billing

TOPS shares the Automatic Message Accounting (AMA) billing system used by the DMS-200 tandem switch. The AMA record formats supported by

TOPS are Bellcore (BC) and Northern Telecom (NT). Records in these formats are generated for answered (completed) TOPS calls.

- Bellcore Format
  - — structure codes - 00700 through 00734 or 04700 through 04734
  - — call codes - 006, 009, 010, 014, 015, 016, 017, 018, 019, 022, 023, 024, 027, 028, 029, 033, 035, 043, 044, 054, 055, 057, 058, 074, 107, 108, 250, 251
- Northern Telecom Format
  - — Direct Distance Dialing (DDD) records
  - — Direct Dial Overseas (DDO) records
  - — extension records (hotel, charge, charge adjust, and special billing)

Call and Structure Codes

Producing the various call code/structure code combinations associated with the Operator Position involves operating the appropriate keys on the Operator Position keyboard. These keys are identified in the following table. In this table, each key or key sequence is identified with the associated call code for easy reference.

TOPS Keys for Call Codes

Call code	Structure code	Key action code
006	00700	1+ (no key)
006	00727	1+/long duration
009	00724	411, POS RLS (411 in STDPRT and to TOPS)
009	00725	411/restbil
010	00700	STA PD
010	00701	STA PD/HOTEL
010	00702	STA PD/restbil
010	00705	STA PD/T&C
010	00708	STA PD/restbil/T&C
010	00709	STA PD/COIN/chg adj
010	00711	STA PD/restbil COIN/chg adj

TOPS Call Processing Features (Billing) (continued)

TOPS Keys for Call Codes

Call code	Structure code	Key action code
010	00727	STA PD/long duration
014	00712	STA COL
014	00713	STA COL/restbil
014	00715	STA COL/COIN
014	00717	STA COL/restbil COIN
014	00728	STA COL/long duration
015	00718	STA SPL CLG
015	00719	STA SPL CLG/restbil
015	00721	STA SPL CLG/COIN
015	00723	STA SPL CLG/resbil COIN
015	00729	STA SPL CLG/long duration
016	00700	PER PD
016	00701	PER PD/HOTEL
016	00702	PER PD/restbil
016	00705	PER PD/T&C
016	00727	PER PD/long duration
017	00712	PER COL
017	00713	PER COL/restbil
017	00715	PER COL/T&C
017	00717	PER COL/restbil COIN
017	00728	PER COL/long duration
018	00718	PER SPL CLG
018	00719	PER SPL CLG/restbil
018	00721	PER SPL CLG/T&C

TOPS Call Processing Features (Billing) (continued)

TOPS Keys for Call Codes

Call code	Structure code	Key action code
018	00723	PER SPL CLG/restbil COIN
018	00729	PER SPL CLG/long duration
019	00700	AUTO COL
019	00701	AUTO COL/HOTEL
019	00702	AUTO COL/restbil
019	00727	AUTO COL/long duration
022	00718	STA SPL CLD
022	00719	STA SPL CLD/restbil
022	00721	STA SPL CLD/T&C
022	00723	STA SPL CLD/restbil COIN
022	00729	STA SPL CLD/long duration
023	00718	PER SPL CLD
023	00719	PER SPL CLD/restbil
023	00721	PER SPL CLD/T&C
023	00723	PER SPL CLD/restbil COIN
023	00729	PER SPL CLD/long duration
024	00700	DIAL
024	00701	DIAL/HOTEL
024	00702	DIAL/restbil
024	00705	DIAL/COIN
024	00708	DIAL/restbil COIN
024	00709	DIAL/COIN/chg adj
024	00711	DIAL/restbil COIN/chg adj
024	00727	DIAL/long duration

TOPS Call Processing Features (Billing) (continued)

TOPS Keys for Call Codes

Call code	Structure code	Key action code
027	00700	PCB/PER PD
027	00701	PCB/PER PD/HOTEL
027	00702	PCB/PER PD/restbil
027	00705	PCB/PER PD/COIN
027	00708	PCB/PER PD/restbil COIN
027	00727	PCB/PER PD/long duration
028	00718	PCB/PER SPL CLG
028	00719	PCB/PER SPL CLG/restbil
028	00721	PCB/PER SPL CLG/COIN
028	00723	PCB/PER SPL CLG/restbil COIN
028	00729	PCB/PER SPL CLG/long duration
035	00700	NO AMA
035	00701	NO AMA/HOTEL
035	00702	NO AMA/restbil
035	00705	NO AMA/COIN
035	00708	NO AMA/restbil COIN
035	00709	NO AMA/COIN/chg adj
035	00711	NO AMA/restbil COIN/chg adj
035	00727	NO AMA/long duration
043	00700	VFY PD
043	00701	VFY PD/HOTEL
043	00702	VFY PD/restbil
043	00705	VFY PD/COIN
043	00708	VFY PD/restbil COIN

TOPS Call Processing Features (Billing) (continued)

TOPS Keys for Call Codes

Call code	Structure code	Key action code
043	00709	VFY PD/T&C/chg adj
043	00711	VFY PD/restbil COIN/chg adj
043	00727	VFY PD/long duration
044	00700	EMER INTERRUPT
044	00701	EMER INTERRUPT/HOTEL
044	00702	EMER INTERRUPT/restbil
044	00705	EMER INTERRUPT/COIN
044	00708	EMER INTERRUPT/restbil COIN
044	00709	EMER INTERRUPT/T&C/chg adj
044	00711	EMER INTERRUPT/restbil COIN/chg adj
044	00727	EMER INTERRUPT/long duration
054	00718	VFY/SPL CLG
054	00719	VFY/SPL CLG/restbil
054	00721	VFY/SPL CLG/COIN
054	00723	VFY/SPL CLG/restbil COIN
054	00729	VFY/SPL CLG/long duration
055	00718	EMER INTERRUPT/SPL CLG
055	00719	EMER INTERRUPT/SPL CLG/restbil
055	00721	EMER INTERRUPT/SPL CLG/T&C
055	00723	EMER INTERRUPT/SPL CLG/restbil COIN
055	00729	EMER INTERRUPT/SPL CLG/long duration
057	00700	VFY/NO AMA
057	00701	VFY/NO AMA/HOTEL
057	00702	VFY/NO AMA/restbil

TOPS Call Processing Features (Billing) (continued)

TOPS Keys for Call Codes

Call code	Structure code	Key action code
057	00705	VFY/NO AMA/COIN
057	00708	VFY/NO AMA/restbil COIN
057	00727	VFY/NO AMA/long duration
058	00700	EMER INTERRUPT/NO AMA
058	00701	EMER INTERRUPT/NO AMA/HOTEL
058	00702	EMER INTERRUPT/NO AMA/restbil
058	00705	EMER INTERRUPT/NO AMA/COIN
058	00708	EMER INTERRUPT/NO AMA/restbil COIN
058	00727	EMER INTERRUPT/NO AMA/long duration
074	00700	NO AMA
074	00727	NO AMA/long duration
107	00731	sent PD or COIN PD/CHG ADJ
107	00732	COL, 3RD, DPL blg/CHG ADJ
108	00733	inward call (KP 121 ST, INW at screen)
250	00730	inward call (0- call, cancelled)
251	00734	Inter-LATA call to IC

The following list identifies the types of call codes or statistic being recorded.

Types of call codes or statistic being recorded

Chars	Code	Meaning
1-3	001	Detailed Message Rate, Timed, With MBI Feature Group A (FBA) Terminating
	002	Message Rate, Timed, With MBI
	003	Detailed Message Rate, Untimed, With MBI
	004	Message Rate, Untimed, With MBI

TOPS Call Processing Features (Billing) (continued)

Types of call codes or statistic being recorded

Chars	Code	Meaning
	005	Detailed Message Rate, Timed, No MBI
	006	Station Paid
	007	WATS Station Detail Recording (No SPB)
	008	INWATS, Terminating Entry
	009	Directory Assistance (411)
	011	Automatic Flexible Routing
	021	CCSA Sampling
	026	Conference Trunk Usage
	031	Call Forwarding Activation
	032	Tandem Tie Trunk
	033	Directory Assistance (555)
	034	Signaling Irregularities
	036	SLUS, Terminating Entry
	037	SLUS, Overflow Counts
	041	Local Coin
	042	Time Change
	067	Flat Rate
	068	WATS SPB
	071	INWATS Overflow Count
	072	Intra-LATA DATAPATH
	074	Free Call
	085	Electronic Tandem Switched Call
	088	Non-Directory Assistance (555)
	090	Sensor Tracer

TOPS Call Processing Features (Billing) (continued)

Types of call codes or statistic being recorded

Chars	Code	Meaning
	092	Sensor/RAO Tracer
	110	Inter-LATA Station Paid
	111	Inter-LATA WATS, Station Detail
	114	Inter-LATA WATS, Billing Number
	117	Inter-LATA DATAPATH
	119	Terminator Access Record
	120	Originating Exchange Overflow Counts
	121	DATAPATH Terminating Access Record
	131	Feature Group A (FGA) Originating
	134	Feature Group B (FGB) Originating
	135	FGB Terminating
	141	IC/INC Number Service Calls
	142	Operating Company Number Services Calls
	800 to 805	Generic Record
4		SIGN character (HEX C or HEX D)

Bellcore CAMA Recording Units

Effective with BCS23, all Bellcore TOPS offices must increase the quantity of Bellcore CAMA recording units by a number equal to the sum of the TOPS (TOPS_NUM_RU) and CAMA TOPS (TOPS_NUM_CAMA_RU) recording units engineered for the office in question. The formula for computing this value is as follows:

```
  #_BC_AMA_UNITS      (Table OFCENG)
+ TOPS_NUM_RU         (Table OFCENG)
+ TOPS_NUM_CAMA_RU    (Table OFCENG)
_____________________
= #_BC_AMA_UNITS
```

This engineering change must be performed for ALL Bellcore TOPS. The number of TOPS recording units and CAMA TOPS recording units should remain the same.

The amount of data store required for each Bellcore CAMA recording unit is 142.

This engineering change has no affect on the number of Bellcore LAMA recording units (#_BC_LAMA_UNITS parameter in table OFCENG).

Call Details Recording

During the process of recording and storing billing information and prior to the actual writing of this information onto an AMA device, the following interruptions could occur resulting in charge-free calls:

- no recording unit extension block available
- no AMA devices or files available
- the AMA process traps because of software bugs, necessitating a warm restart to recover the AMA system.

In offices equipped with feature group OSB00101, calls encountering such AMA failures can, at the discretion of the operating company, be routed as follows:

- free-of-charge:

  Parameter AMA_FAILURE_FREE_CALL of table OFCENG is set to Y (yes).

- to TOPS (or another interexchange carrier operator system) or to an announcement or tone.

  Parameter AMA_FAILURE_FREE_CALL of table OFCENG is set to N (no), causing all toll calls to be routed according to parameter AMA_FAILURE_ROUTE_POSITION of table OFCVAR, that specifies the position in table POSITION to which the calls are to be routed.

  The default for AMA_FAILURE_ROUTE_POSITION is AMAFAIL. The operating company must datafill AMAFAIL in table POSITION with an office route reference index that refers to a route list in table OFRT. If this is not done, the routed calls are taken down with CCB and CDB dumps.

Station Message Detail Recording

TOPS Call Processing Features (Billing) does not affect Station Message Detail Recording.

TOPS Call Processing Features (Billing) (continued)

Datafilling office parameters

The following table shows the office parameters used by TOPS Call Processing Features (Billing). For more information about office parameters, refer to *Office Parameters Reference Manual*.

Office parameters used by TOPS Call Processing Features (Billing)

Table name	Parameter name	Explanation and action
OFCENG	TOPS_OFFICE_TYPE	This office parameter specifies the Automatic Number Identification (ANI) spill format, DMS-200 or DMS-250, to be used by the switch.
	AMA_FAILURE_FREE_CALL	This office parameter provides routing options that can be used to charge toll calls during AMA problems or failure.
OFCOPT	AMA_EQUIPPED	This office parameter indicates that a DMS-200 switch includes the OSB00101 package and the AMA feature.
OFCVAR	AMA_FAILURE_ROUTE_POSITION	This office parameter specifies the position in table POSITION to which all AMA failure calls (CAMA and LAMA) are routed.
	CAMA_SUSP_CALL_ALLOWED	This office parameter specifies whether calls proceed without billing or operator intervention when CAMA is suspended for the following type of calls: 1+ CAMA, 1+ coin, and 1+ hotel.

Datafill sequence

The following table lists the tables that require datafill to implement TOPS Call Processing Features (Billing). The tables are listed in the order in which they are to be datafilled.

Datafill tables required for TOPS Call Processing Features (Billing)

Table	Purpose of table
CLLI	Common Language Location Identifier Table. This table uniquely identifies the far end of each announcement, tone, trunk group, test trunk, national milliwatt test lines, and service circuit.
TERMDEV	Terminal Device.

TOPS Call Processing Features (Billing) (continued)

Datafill tables required for TOPS Call Processing Features (Billing)

Table	Purpose of table
DMODEM	Digital Modem.
HNPACONT	List of HNPA Code Subtables.
LCASCRCN	Local Calling Area Screening Control.
PFXTREAT	Prefix Treatment.
STDPRTCT	LIst of Standard Pretranslation Tables.
TRKGRP .TOPS	Trunk Group Type TOPS. This table is required in a toll office with a TOPS DMS-200 switching unit or in a combined local/toll office with a TOPS DMS-100/200 switching unit.
TRKGRP.OP	OG/2W From Local/Toll to TOPS/TSPS Trunk Group (Type OP).
TRKSGRP	Trunk Subgroup Table. This table contains information about each subgroup associated with a trunk group defined in table TRKGRP.
TOPSPOS	TOPS Position. This table defines TOPS positions to the switch. This table specifies the services that a position can provide.
TOPSDEV	TOPS Device. This table lists the devices that require one trunk circuit (for data) and identifies the trunk circuit locations.
CONF3PR	Three Port Conference Circuit.
OFRT	Office Route.
LCASCRCN .LCASCR	Local Calling Area Screening Subtable.
AMRCAT	AMR Category Digits.
CLSVSCRC	Class of Service Screening Control.
LINEATTR	Line Attribute.
HNPACONT .HNPACODE	HNPA Code Subtable.
STDPRTCT .STDPRT	Standard Pretranslator Subtable.
CLSVSCRC .CLSVSCR	Class of Service Screening Subtable.

TOPS Call Processing Features (Billing) (continued)

Datafill tables required for TOPS Call Processing Features (Billing)

Table	Purpose of table
TOPS	Traffic Operator Position System. This table is used during translations to determine the type of service required by a call based on the call origination type.
OPRDAT	TOPS Operator Data. This table lists all the operator numbers that have been assigned. Only operators with a number listed in this table are allowed to log in to a TOPS position.
OPRTRANS	TOPS Operator Translations.
TOPSENTC	TOPS Entry Code. This table appends module 306 to the billing record.
TOPSBC	TOPS Billing Code. This table appends module 306 to the billing record.
TOPSDISP	Expanded Operator Display.
TOPSAMA	TOPS AMA.
TRKNAME	Trunk Group ADNUM to CLLI Mapping.
TOPLNDIS	TOPS Line Display.
BELLCAT	Table BELLCAT allows the Operating Company to define the FORMAT, CLGSERV and ANIROUTE fields upon receipt of a specified ANI ID digit over a TOPS trunk with BELL signaling.
AMTKOPT	AMA Trunk Group Option.
TOPSENTC	Lists the entry codes and charge for charge class.

Datafilling table AMATKOPT

Datafill example for table AMATKOPT

The following table shows the datafill specific to TOPS Call Processing Features (Billing) for table AMATKOPT. Only those fields that apply directly to TOPS Call Processing Features (Billing) are shown. For a description of the other fields, refer to the data schema section of this document.

TRKINFO is included as a trunk group option in this example.

MAP display example for table AMATKOPT

```
   CLLI          OPTIONS
 ____________________________________________________________
  TOPSIC        (TRKINFO)$
```

When calls are routed over a trunk in trunk group TOPSIC and a billing record is produced, then module 104 is appended to that record.

Datafilling table TOPSBC

Table TOPSBC appends module 306 to the billing record.

The following table shows the datafill specific to TOPS Call Processing Features (Billing) for table TOPSBC. Only those fields that apply directly to TOPS Call Processing Features (Billing) are shown. For a description of the other fields, refer to the data schema section of this document.

Datafilling table TOPSBC

Field	Entry	Explanation and action
CHGCLSS	alphanumeric(4 characters)	indexes into table TOPSENTC.

Datafill example for table TOPSBC

The following example shows sample datafill for table TOPSBC.

MAP display example for table TOPSBC

```
CLLI     BILLCODE LCANAME SCRNCL ACTUALBC CHGCLSS
____________________________________________________________
TBELLIC1    320    L32X    NSCR   613239   TOPS
```

Datafilling table TOPSENTC

Table TOPSENTC appends module 306 to the billing record.

The following table shows the datafill specific to TOPS Call Processing Features (Billing) for table TOPSENTC. Only those fields that apply directly

TOPS Call Processing Features (Billing) (end)

to TOPS Call Processing Features (Billing) are shown. For a description of the other fields, refer to the data schema section of this document.

Datafilling table TOPSENTC

Field	Entry	Explanation and action
CHGCLSS	alphanumeric (4 characters)	Must be the same value as entered in field CHGCLSS of table TOPSBC.
ECANDCHG	see subfields	The line service value part of the ECANDCHG field is placed into module 306 as OLIP information when a call is made over the trunk group that is datafilled as above. ***Note:*** The charge part of the ECANDCHG field can be set to Y(es) or N(o) but has no effect on whether module 306 is appended to the record.

Datafill example for table TOPSENTC

The following example shows sample datafill for table TOPSENTC.

MAP display example for table TOPSENTC

```
CHGCLASS ECANDCHG
_____________________________________________________________________
TOPS     02      N
```

Translation verification tools

TOPS Call Processing Features (Billing) does not use translation verification tools.

SERVORD

TOPS Call Processing Features (Billing) does not use SERVORD.

TOPS Call Processing Features (Call Processing)

Ordering codes

Functional group ordering code: OSB00101

Functionality ordering code: not applicable

Release applicability

TOPS15 and up

Prerequisites

To operate, TOPS Call Processing Features (Call Processing) requires the following:

- Functionality BAS Generic, BAS00003
- Table TOPSFTR paramter TOPS_ON_OFF_SWITCH = Y

Description

This functionality is provided by the following features:

Feature number	Feature name
none	Basic TOPS date guidelines (BCS24)
AF1784	TOPS Base Changes (BCS28)
BR0775	Queue Selection on a Trunk Group Base
BR0527	TOPS Charge_A_Call Enhancements
AF0720	TOPS Crossbar Signaling
AF0476	TOPS MP DA/INT Queuing
AF0477	TOPS MP Force Management Controls and FADS
AF0478	TOPS MP Trunking
AF0479	TOPS MP Expanded OGT and XFR Key Capability
AF0482	TOPS MP Key Functions and Screen Updates
BR20241	Bell Canada AABS Support
UG000081	Special Billing Numbers and 14-Digit DOM
AF2782	TOPS Multiservice Queuing (base changes)
AF3191	OPP Base TOPS Changes

TOPS Call Processing Features (Call Processing) (continued)

Feature number	Feature name
CM09734	TOPS MP Special Number Display
BK00584	Zenith Number 10-Digit Compatibility
BR1152	No off-hook is sent to the EO
BK00221	Parameter to control delay before wink request for ANI
UG100659	Incoming ONI Trunks show idle at MAP B
none	Tables SPLDNI and FXDNMAP required datafill (BCS27)
none	Table SPLDNID memory allocation (BCS19)
none	Routing deflected 0- call back to TOPS queue
none	End office routing of DA call
none	Increasing the number of TOPS positions and OC voice links
BK02742	DA Block Forward Number Optionality
BK02732	DA calls not released when CLG goes on-hook
CV14269	TOPS POS Display Discrepancy
BR19395	Implement SA Queuing
UN100159	SA/IC Queuing Enhancements
BR31793	Distinct number of call arrival tones on DA/TA/INTCP calls (BCS35)
BK04203	Disable KP FWD/BK for DA only positions (BCS35)
BK04688	Allow multiple routing for multi-NPAs/trunk group (BCS35)
BK04369	Table MPCLINK field LINKNABL description (BCS35)
CE20577	TOPS: Trunks with DANI will not outpulse (BCS35)
NV20106	TOPSPOS/TOPS_NUM_TRAFFIC_OFFICES dependency (BCS35)
UF301523	No TRK118 when DN SEL (BCS36)
BK04281	TOPS - ISUP Re-engineering Phase I
50039957	DA positions in an OC network

TOPS Call Processing Features (Call Processing) (continued)

Feature number	Feature name
50058693	Optionally turn off RAO and NPA checks (TOPS08.1)
59006865	MD Code Removal and ReEngineering (TOPS12)

BR0775 - Queue Selection on Trunk Group Basis

This feature provides call processing software that routes calls incoming over specified trunk groups to selected Transfer Positions.

BR0527 - Charge_A_Call Enhancements

This feature allows an Operating Company to use specific class charges for calls originating on lines that are designated as restricted (for example, inmate and hospital).

AF0720 - TOPS - Crossbar Signaling

This feature allows the DMS switch to accept ONI- or ANI-failure calls without the ST signal from a No. 5 Crossbar switch.

Directory Assistance (DA) Features

The following five features provide the software necessary for DA queuing, force management, trunking, transfer capability, and operator screen updates. To implement DA, changes are also made to base software. This document only describes changes to the base software. For a complete description of these features, refer to TOPS MP Terminal Support, TPC00003.

AF0476 - TOPS MP DA/INT Queuing

This feature extends the current queuing facilities to include DA. This feature also provides the ability to classify calls as DA and to ensure that these calls are assigned to positions and operators capable of handling DA calls.

AF0477 - TOPS MP Force Management Controls and FADS

This feature extends current TOPS FM capabilities to include control over the DA queue. This feature makes changes to the generate Force Management reports to reflect DA queue information. Changes are also made to the Force Management commands and Force Management positions to reflect the addition of the DA queue.

AF0478 - TOPS MP Trunking

This feature enhances TOPS trunk group data for the routing of DA calls to TOPS operators with the DA capability.

TOPS Call Processing Features (Call Processing) (continued)

AF0479 - TOPS MP Expanded OGT and XFR Key Capability

This feature provides the capability to datafill the OGT keys on the TOPS positions. Seven OGT keys can be datafilled on the TOPS 04 position and up to 100 OG keys can be defined on the TOPS MP position. This feature provides operators with the ability to transfer DA calls to another operator for further processing or to the DA queue if no operator with the DA capability is available.

AF0482 - TOPS MP Key Functions and Screen Updates

This feature provides manual DA billing on the TOPS MP position. To implement this capability, the DA search screen and the DA billing screens are added to screens that are accessible by TOPS operators. Also included with this feature are additional key functions specific to DA billing.

Basic TOPS data guidelines (BCS24)

These guidelines provide datafill recommendations for 37 tables.

AF1784 - TOPS Base Changes - BCS28

AF1784 is part of the TOPS Administration portion of the OSB00101 software feature package, but has some impact on Call Processing.

AF2782 - TOPS Multiservice Queuing (base changes)

This feature documents the base changes to TOPS (Traffic Operator Position System) software in BCS 32 required for the implementation of the TOPS Queue Management System (QMS) in BCS 33.

AF3191 - OPP Base TOPS Changes

This feature uses a timer (position sanity timer) to take down calls attached to an unoccupied position. Also, this feature uses Open Position Protocol (OPP) to communicate between the DMS and an operator position.

CM09734 - TOPS MP Special Number Display

On TOPS MP positions, a new display has been added that indicates a call arriving at the position could have been automated but was not.

BK00584 - Zenith Number 10-Digit Compatibility

This software enhancement enables individual offices to choose whether Zenith numbers within the area code of an office are translated using 7 or 10 digits. To implement this, parameter ZENITH_TEN_DIGIT_DIALLING is created in table TOPSPARM. This modification is particularly beneficial to offices that have switched to 10 digit dialing plans.

TOPS Call Processing Features (Call Processing) (continued)

BR11562 - No offhook is sent to the EO

This PRSDOC creates a wink/offhook option (field ANIREQ) for requesting the ANI spill from an end office for incoming TOPS trunks. The wink option allows the true answer to be propagated to the end office from the terminating office for non-operator calls over TOPS trunks.

BK00221 - Parameter to control delay before wink request for ANI

This PRSDOC creates parameter MF_TRUNK_WINK_REQUEST_DELAY in table TOPSPARM to control the amount of delay before a wink is sent to an End Office for request of the ANI spill. This parameter applies only when the wink request ANI capability is used on TOPS trunks and only for MF TOPS trunks equipped with MF Receivers. It does not apply to TOPS trunks equipped with Universal Tone Receivers (UTR).

UG100659 - Incoming ONI trks show idle at MAP B

Parameter RONI_TAKE_DOWN_DELAY is created in table TOPSPARM to control the time to wait for a CAMA office to indicate the receipt of “good digits." This indication is by both trunks in the RONI pair going onhook. RONI_TAKE_DOWN_DELAY is useful when the DMS switch interfaces with offices that may take more than 500ms for both trunks in the RONI pair to go onhook.

Datafill for tables SPLDNID and FXDNMAP plus memory allocation

Fields FXNUM and ACTLNUM in table FXDNMAP must be datafilled in table SPLSEL with identical data.

Guidelines are provided for memory allocation of table SPLDNID.

Routing Deflected 0- Calls Back to TOPS Queue

This guideline allows deflected EMERGENCY 0- calls to return to TOPS queue.

End office routing of DA calls

This guideline shows correct routing of DA calls in an end office.

Increasing the number of TOPS positions and OC voice links

Increasing the number of TOPS positions or OC voice links on BCS upgrade when adding TOPS MP or MPX positions to an inservice office.

BK02742 - DA Block forward number optionality

Parameter DA_BLOCK_FWD_NUMBER has been added to table VROPT. If set to Y, a DA number does not forward when an operator keys a forward number on during a DA call.

TOPS Call Processing Features (Call Processing) (continued)

BK02732 - DA call not released when CLG goes on-hook

Parameter DA_AUTO_POS_RLS has been added to table VROPT. It is recommended that users set this parameter to N when handling ADAS calls

If the parameter is set to Y, the following call scenario may result: A DA operator receives an ADAS call and while listening to the ADAS playback, the subscriber goes on-hook. If the operator immediately receives a non-ADAS call, he/she may think the first call is still being handled when in fact, it is a brand-new DA call. This scenario is mostly seen on MPX AOSS positions because there are no icons or other displays to let the operator know the state of the call. With all other positions such as MPs and IWS, icons are displayed to let the operator know when a customer goes on-hook. If set to Y, DA calls are automatically released from TOPS General positions when the calling party goes on-hook.

If the parameter is set to N, the subscriber would go on-hook toward the end of the initial caller's playback. The operator would then hear the end of the ADAS playback, and silence would follow. The operator could then hit the Pos Rls key. At this point, the arrival tone of the non-ADAS call would be heard and listing information could be received as usual.

CV14269 - TOPS POS display discrepancy

The “split clg" and “gen ama" screen displays are now available in languages other than English. This capability is implemented by 3 new parameters in table TOPSPARM for TOPS 04 positions.

BR19395 - Implement SA Queuing

This PRS creates table SAQSIZE, which associates a maximum queue depth with each team. This table is datafilled after Office Parameter TOPS_NUM_TRAFFIC_OFFICES.

UN100159 - SA/IC Queuing Enhancements

This PRSDOC enhances the Service Assistant/In-Charge (SA/IC) Queuing by allowing the Operating Company to service SA/IC requests according to the age of the request. Also, the number of SA/IC positions defined in any single team is increased from 6 to 126.

BR31793 - Distinct number of call arrival tones on DA/TA/INTCP calls

This feature identifies calls to operators by providing call arrival tones.

BK04203 - Disable KP FWD/BK for DA only positions

This PRSDOC allows disabling of the KP forward and KP back keying functionality on delay calls for operators that are directory assistance (DA)

only on multipurpose (MP) positions. The special verify (SPL VFY) function is also blocked.

BK04688 - Allow alternate routing for multi NPAs/trunk group

This feature provides consistent routing of operator assisted calls from TOPS positions that serve multiple NPAs.

BK04369 - Table MPCLINK field LINKNABL description (BCS35)

Field LINKNABL in table MPCLINK description is changed.

CE20577 - TOPS: trunks with DANI won't outpulse

This PRSDOC establishes some table control restrictions for TOPS trunks with a CLGID (calling identification) of DANI (dedicated automatic number identification). Also, it establishes a new TOPS Office Parameter that controls the display of the calling number for DANI trunks on presentation to an operator. The following tables are affected: TRKGRP, TOPSBC, and TOPSPARM.

NV20106 - TOPSPOS and TOPS_NUM_TRAFFIC_OFFICES

When changing office parameter TOPS_NUM_TRAFFIC_OFFICES in table OFCENG, a check is made to ensure that no tuple in TOPSPOS references a team that is greater than the new parameter value.

UF301523 - No TRK118 when DN SEL (BCS36)

A TRK118 log is not generated when the FXNUM and ACTLNUM in table FXDNMAP do not match the identical SPLSEL data in table SPLDNID or the TOPS database tables. This is in reference to section “Tables SPLDNID and FXNMAP required datafill (BCS27)." Therefore, the reference to the TRK118 log is removed.

BK04281 - TOPS - ISUP Re-engineering Phase I

The interworking of TOPS with ISUP trunks was originally introduced in BCS 21. This activity ensures the quality and robustness of interworking TOPS with ISUP IT and ATC trunks.

50039957 - DA positions in an OC network

In a TOPS OC network, operator positions that provide directory assistance (DA) or intercept services must have unique position numbers in table TOPSPOS. This applies across the network and to all software releases. Position numbers must be different between the host and its remotes, and between remotes off the same host.

TOPS Call Processing Features (Call Processing) (continued)

50058693 - Optionally turn off RAO and NPA checks (TOPS08.1)

In North America (NA), 14-digit domestic calling card number formats are checked. However, some countries in North America (for example, the Caribbean) use open numbering. So these countries do not have NA-based restrictions on the card format. Therefore table TOPSPARM new parameter DOM_CCARD_FORMAT_CHECKS allows turing off the NPA and RAO checks. For further information on this parameter, refer to the datafill procedure section.

Operation

Force Manager/In-Charge Manager Action

The QFADS and QTADS TTY commands provide increased control over queue thresholding and enhance the QFADS and QTADS periodic 15 and 30 minute reports to improve the accuracy of existing data and to provide new data.

Like the regular FM periodic reports, these reports are received every 15 minutes (if quarter-hourly FM reports have been requested) and every 30 minutes, 6 hours, and 24 hours.

For a complete description of these reports, see AF0477 - TOPS MP Force Management Controls and FADS.

Call transfer without BR0775 active

Calls access a Transfer Position in one of two ways:

- From a general Operator Position. The operator presses the XFR1 (or XFR2) and POS RLS keys.
- Directly. The call is sent directly to a transfer operator based on the datafill in table TOPS.

TOPS forwards most calls to general Operator Positions. When a transfer operator is required, the general operator transfers the call to a transfer queue by keying the OGT key, selecting the appropriate transfer function (XFR1 or XFR2) from the menu displayed on the CRT followed by the START key.

An operator cannot transfer a call under the following conditions:

- the START TIMING key has been pressed
- there is a forward connection
- the call is a CAMA call.

TOPS Call Processing Features (Call Processing) (continued)

Four data tables must be datafilled to accomplish call transfer. These data tables are as follows:

- Table OPRDAT
- Table TOPSPOS
- Table TOPS.

Note: Tables OFCENG and TOPSPOS cannot be datafilled to include DA entries unless the DA software is present. Refer to “User Perspective" for a description of these tables.

Table TOPSPOS

The TOPS Position (TOPSPOS) table lists the positions that require two trunk circuits (one voice, one data), and identifies the trunk circuit locations. The In-Charge, Assistance, and Operator Positions are assigned in this table. When assigning the Operator Positions, specify the types of calls that the position handles (general, transfer one, or transfer two). This table also lists the Traffic Office number to which the position belongs.

The following figure shows sample datafill for the TOPSPOS table.

MAP display example for table TOPSPOS

```
 POSNO
                 VCCKT   VCPDGRP   CARDCODE

                     POSAREA

CNTRLR
_____________________________________________________________
 100
                   TM8    0  24    NPDGRP     2X722A
                                OPR 1 TASERV $ GEN XFR1 XFR2 $
 NT4X71            TM8    0  25     NPDGRP    BELL108
 101
                   TM8    0  26    NPDGRP     2X722A
                                              IC 1 TASERV $
 NT4X71            TM8    0  27   NPDGRP    BELL108
 312
                  DTC 0   3  13    NPDGRP     DS1SIG
                                      OPR 2 TASERV $ XFR2 $
 NT4X71           DTC 0   3  14 NPDGRP    BELL202
```

TOPS Call Processing Features (Call Processing) (continued)

BCS28 Changes for Table TOPSPOS

The following exhibit lists the BCS28 changes for table TOPSPOS.

Note: The changes related to TMS and Intercept Service are not supported in BCS28. They are supported in a future software release.

Changes to table TOPSPOS in BCS28

Field	Description of change
PMTYPE	now includes TMS as a valid PM type.
VCCKT	now includes TMS as a valid voice circuit.
If PMTYPE is TMS, the following subfields apply:	
TMSNO	specifies the TMS on which the voice circuit exists. The range of values is 0-255.
TMSCKTNO	specifies the p-side port number of the voice circuit. The range of values is 0-19.
TMSCKTTS	specifies the channel number of the voice circuit. The range of values is 1-24.
CNTRLR	is now a selector field, and also includes TMSTPC as a valid controller type. If CNTRLR is NT4X71 or TPC, the fields DTCKT, DTGRP, and PROTOCOL are subfields of CNTRLR.
If CNTRLR is TMSTPC, the following subfields apply:	
TPCNO	specifies the TPC number. The range of values is 0-254.
MPNO	specifies the HSLI card on the TPC to which the TOPS MP is configured. These cards are numbered from left to right on a TPC shelf. The range of values is 0-3.

Table TOPS

The Digit Translation Routing To TOPS (TOPS) table determines the screen displays for each call type and determines to which position each type of call routes. The originating call type indexes into table TOPS. Most calls route to the General Positions. To index table TOPS, the trunk group over which the call is routed must specify a pretranslator name used to index the STDPRTCT table.

The Digit Translation Routing to TOPS (TOPS) table is used by TOPS when translation of dialed digits from another data table points to the TOPS table.

The TOPS table lists the following information for each call recognized by TOPS:

- the string be displayed on the Operator Position screen to identify the call type

BR0527 - TOPS - Charge_A_Call Enhancements

Overview

The TOPS - Charge_A_Call feature allows an Operating Company to use specific class charges for calls originating on lines that are designated as restricted.

The directory numbers (DN) associated with restricted lines are datafilled in table SPLDNID. A line is restricted if the RSTRCTD selector is associated with a calling number, or if the COIN selector (subfield RESCOIN set to Y) is associated with the calling number. The class charges associated with these directory numbers are datafilled in table RESTBIL.

Restricted calls are carried on trunk groups that are designated in table TRKGRP (TOPS) as one of the following trunk group types:

- restricted (RESTBIL)
- combined (COMBINED)
- DN lookup (DNLOOKUP).

When a restricted call arrives at the Operator Position, an Operating Company-defined name or numeric code displays on the CRT (for example, 74 = inmate collect only service). The operator uses the information displayed to select one of the following class charges:

- Sent Paid (PD)
- Collect (COL)
- Credit Card (CC)
- Third Party (3rd)
- Special Calling (SPLCLG)
- Special Called (SPLCLD).

The Operating Company assigns the calling class (COIN, NONCOIN, HOTEL) of the originating line in table RESTAMA. The calling class is entered in the AMA record generated when a call is originated from a restricted number. For example, when a restricted coin call is forwarded to an Inter-LATA Carrier, 01 (Prepay Coin) or 04 (Postpay Coin) is entered in the

TOPS Call Processing Features (Call Processing) (continued)

Service Feature field of a Bellcore format AMA record. A 1 is entered in the Service Feature code field of a Northern Telecom format record.

User Perspective

When a restricted call arrives at an Operator Position, the name or numeric code associated with the restricted call type (such as HOSP or 94) is displayed on the TOPS MP CRT. The name or numeric code indicates that a special class charge must be entered to complete that call. The screen name or numeric code to indicate the call type is datafilled in table RESTBIL, field SCRNDISP.

The class charge specifies what displays on the Operator Position CRT. The class charges associated with a call class are datafilled by the Operating Company in table RESTBIL. The following exhibit provides example names for restricted calls, and the acceptable charge classes used to successfully complete (float) these calls:

Sample Restricted Charge Classes and Names

CHARGE CLASS ALLOWED	SCREEN DISPLAY
Collect Only	74 or INMATE
Collect, Auto-Collect, Calling Card, Special Called	76 or DORM
Collect, Auto-Collect, Calling Card, Special Called, Bill-to-Third Party, Special Billing	93 or HOSP and 94 or HOTEL
Collect, Auto-Collect, Calling Card, Special Called, Bill-to-Third	98 or Coinless

When an operator enters a valid class charge for a restricted call, the class charge displays on the Operator Position CRT. The operator then completes the call by pressing the POS RLS key.

When the operator enters an unacceptable charge class, the charge field flashes to indicate that an incorrect charge has been entered. If the delayed outpulsing feature is active, the operator presses the RLS FWD key to release the forward connection and then notifies the subscriber that the call cannot be charged in

that manner from the telephone being used. Only the charge classes datafilled for that restricted call are acceptable.

Software operation

Restricted calls are carried on trunk groups that are designated in table TRKGRP (TOPS) as restricted (RESTBIL), combined (COMBINED), or DN lookup (DNLOOKUP). These trunk group types are datafilled in the STATCLASS field of table TRKGRP. The ANI spill from calls routed over these trunk groups determines when table SPLDNID is searched for restricted billing numbers.

Combined trunk group

When the ANI spill for a call includes ANI ID digit 7 from a Combined trunk group, table SPLDNID is searched to match the calling number with a special directory number (SPLDN) datafilled. If a match is found and the match indicates restricted billing, table RESTBIL is indexed to determine the class charge(s) allowed to complete the call. Table RESTBIL also determines the name or numeric code to be displayed on the Operator Position CRT for the call.

Restricted billing trunk group

All calls incoming on a trunk group with a station class of RESTBIL indexes table SPLDNID to match the calling number to a number datafilled. If the calling number does not match a number datafilled in this table, the call is processed as if it had arrived on a regular Combined trunk group. Calls with ID digits 0 or 7 are processed as follows:

- If the ANI spill includes ANI ID digit 7, the call is treated as an ANI failure. The operator then obtains the calling number from the subscriber and enters the calling digits. At this time, table SPLDNID is reentered and searched to match the calling number to a number datafilled. If the calling number matches one datafilled in the SPLDN field of table SPLDNID, the Operator Position CRT displays the restricted name associated with that call (datafilled in table RESTBIL).
- If the ANI spill includes ANI ID digit 0 received from the Restbil trunk group, the ANI spill is preserved and table SPLDNID is searched for the calling number. If the calling number matches one datafilled in the SPLDN field of table SPLDNID, the Operator Position CRT displays the restricted name associated with that call (datafilled in table RESTBIL). Inter-LATA calls destined to the carrier spills the ANI digit based on the result of the table SPLDNID search. For example, if the call comes in with an ANI ID digit of 0 and and a match of the calling number is found in table SPLDNID, then the ANI ID digit is updated based on how the calling number is marked in table SPLDNID, for example 7.

TOPS Call Processing Features (Call Processing) (continued)

DNLOOKUP trunk group

Restricted billing can also apply to calls originated on a DNLOOKUP trunk group. When the ANI spill includes ANI ID digit 0, table SPLDNID is indexed to match the calling number to a number datafilled in the SPLDNID table. If a match is found and the match indicates a restricted number, the RESTBIL table is indexed to determine the class charge allowed to complete the call. The Operator Position CRT displays the name or numeric code associated with the call (datafilled in table RESTBIL).

When a coin line is designated as restricted, the coin and restricted class of service applies. In other words, the DMS switch calculates charges applied and generates coin signals for coin lines designated as restricted. To designate a coin line as restricted, datafill the COIN selector and the RESCOIN and RBILCLAS subfields of table SPLDNID. The RESCOIN subfield indicates whether the coin phone is restricted. If the RESCOIN field is set to Y, the RBILCLAS is datafilled to specify the index into table RESTBIL.

The call class (for example, HOTEL, INMATE) determines what billing types are allowed to complete a restricted call. The class charges for each call class are datafilled in table RESTBIL. The name displayed on the Operator Position CRT for each restricted call class is also datafilled in table RESTBIL. The operator must enter a class charge acceptable for that calling number to complete the call. The DMS switch checks the keyed class charge against the class charge datafilled for that calling number in table RESTBIL. On the TOPS 04 position, the charge display flashes when an invalid class charge has been entered by the operator. On the TOPS MP position, an invalid class charge is indicated by calling, called, and special fields (see the following figure for an example). The operator must then enter an acceptable charge to complete the call.

A class of service (COIN, NONCOIN, HOTEL) must be associated with each call class and entered in table RESTAMA. When a call is originated from a restricted line, an AMA record is generated. The Service Feature field in the AMA record indicates the class of service for the restricted call.

Table TRKGRP

The Trunk Group (TRKGRP) table identifies the trunk group over which calls are routed. For restricted billing, traffic can be routed over TOPS trunk groups with STATCLAS equal to COMBINED, RESTBIL, or DNLOOKUP. Based on the ANI spill and the STATCLAS of the trunk group, table SPLDNID is searched to match the calling number to a number datafilled in the table.

The following exhibit provides sample datafill for a TOPS trunk group that routes restricted traffic:

TOPS Call Processing Features (Call Processing) (continued)

MAP display example for table TRKGRP

```
GRPKEY                                                GRPINFO
_____________________________________________________________
TOPCOMAMF
TOPS 31 NPDGP NCRT IC MIDL 919 MFNL SUPR NSCR N NIL
COMBINED N N
    0 BELL 10 2 2 N Y
TOPCOMBMF
TOPS 0 NPDGP NCRT IC MIDL 613 COBA TPOT NSCR N NIL
RESTBIL  N N
    0 BELL  3 5 2 N Y
TOPCOMCMF
TOPS 0 NPDGP NCRT IC MIDL 919 TOP3 NLCA NSCR Y SP
DNLOOKUP Y Y
    0 BELL 10 2 2 N Y
```

When a call is routed over a Combined trunk group, the ANI spill for that call must include ANI ID digit 7 to index table SPLDNID. When a call is routed over a Restbil trunk group, the ANI spill must include ID digit 0 or 7 to index table SPLDNID. When a call is routed over a DN Lookup Trunk group, the ANI spill must include ID digit 0 to index table SPLDNID.

Table SPLDNID

The Special Directory Number (SPLDNID) table is indexed under the following conditions:

- when the ANI spill for a call on a Combined trunk group includes ANI ID digit 7
- when the ANI spill for a call on a Restricted trunk group includes ANI ID digits 0 or 7
- when the ANI spill for a call on a DN Lookup trunk group includes ANI ID digit 0.

These ANI ID digits index the SPLDNID table where the DMS switch searches to match the calling number to a special directory number datafilled in this table. A line is restricted if the RSTRCTD selector is associated with a calling number, or when the COIN selector (subfield RESCOIN set to Y) is associated with the calling number.

The datafill for a restricted coin line is assigned selector COIN. Subfield RESCOIN is set to Y, and subfield RBILCLASS is assigned an index into the RESTBIL table.

TOPS Call Processing Features (Call Processing) (continued)

For other restricted calls, the SEL field is datafilled as RSTRCTD and subfield BILCLASS is assigned an index into table RESTBIL.

When no match of the calling number is found, the call is handled as a standard call.

The following exhibit provides sample datafill for table SPLDNID.

MAP display example for table SPLDNID

```
SPLDN                   SPLSEL
_____________________________________________________________
6132390003              RSTRCTD 0
6132390004              COIN STD ACTS Y 1
```

Table RESTBIL

The Restricted Billing (RESTBIL) table is indexed by table SPLDNID. This table contains the call name to be displayed on the Operator Position CRT and the charge classes that the operator is allowed to key to complete a restricted call. The name warns the operator that a call requiring special billing has accessed the Operator Position. This screen information is displayed on the first row after the call origination field. The operator must enter an acceptable charge class to successfully complete the call.

The following exhibit provides sample datafill for table RESTBIL.

MAP display example for table RESTBIL

```
BILCLASS      SCRNDISP         BILTYPES
_____________________________________________________________
   0           INMATE           COL
   1           COINLESS         COL CC 3RD SPLCLG
   2           DORM             CC SPLCLG COL
```

Table RESTAMA

The Restricted AMA (RESTAMA) table describes the class of service, HOTEL, COIN, or NONCOIN, entered in the Service feature field for a call originating on a restricted line. This information is entered in the Bellcore Format (BCFMT) AMA record or in the Northern Telecom Format (NTFMT) AMA record. The following exhibit provides sample datafill for table RESTAMA.

MAP display example for table RESTAMA

```
BILCLASS                    AMACLASS
_____________________________________________________
   1                        NONCOIN
   2                        COIN
```

Verification

The following procedure verifies that operator calls routed over a trunk group of type Restbil are completed based on the charge class acceptable for that call class.

Feature verification:

1. Ensure that there is an active file for AMA recording.
2. Set up translations such that a restricted call is routed over a trunk group of type RESTBIL.
3. Datafill table SPLDNID for the calling number of the line designated as restricted.
4. Datafill table RESTBIL for the screen display and the acceptable charge to be applied to that call.
5. Datafill table RESTAMA for the billing class to be written to AMA tape.
6. Make calls to a TOPS position and attempt to bill a call based on the type of call and the charge class.
7. Verify that the call completes successfully.
8. Perform an AMADUMP to ensure that the Service Feature Field of a Bellcore Format record contains 01 (prepay coin) or 04 (postpay coin) for COIN calls, 11 for HOTEL calls, and 00 for a NONCOIN call. Ensure that the Service Feature Code field of a NT Format record contains 1 for a COIN call, 0 for a NONCOIN call, and 2 for a HOTEL call.

AF0720 - TOPS - Crossbar Signaling

AF0720 permits the DMS switch to accept and process ANI-failure and ONI calls from a No. 5 Crossbar switch. The DMS switch processes these calls without errors or failures.

AF0720 virtually eliminates the waiting time for the ST signal on ANI spills coming from a Number 5 Crossbar switch. The digits receiver does not wait for the ST signal when the ANI Information digit indicates an ONI or an ANI-failure condition. Instead, it returns the collected digits to the CC where an ST signal is appended and call processing continues in the usual manner.

TOPS Call Processing Features (Call Processing) (continued)

This feature adds the STNOWAIT field to table TRKGRP for TOPS trunks using BELL signaling. Then, this feature can be selected on an individual trunk group basis through table TRKGRP (TOPS) datafill. When the ANI Information digit indicates an ANI-failure or ONI call and the field STNOWAIT in table TRKGRP (TOPS) is set to YES (Y), the digit receiver does not wait for the ST signal. Instead, the digit receiver analyzes the received digits after only two have been collected. For ANI-failure or ONI calls, the digit receiver returns the two collected digits to the CC, which then appends the ST signal to the collected digits. The call is then processed in the usual manner.

AF0476 - TOPS MP DA/INT Queuing

Calls can only be classified as DA if the DA software is present. For a complete description of this feature, refer to TOPS MP Terminal Support, TPC00003.

This feature provides the ability to queue DA calls and to ensure these call types are assigned to operators with the DA capability. TOPS provides this ability by extending call transfer mechanisms. Since DA call types are considered a special type of transfer call, they must be handled independently of the transfer services.

For a complete description of call queuing, refer to *TOPS MP Force Management Guide*.

AF0478 - TOPS MP Trunking

This feature implements call processing changes that are necessary for routing DA calls to TOPS MP positions. To implement this capability, two station classes of TOPS trunks are created. AF0478 allows the assignment of DA call types and classes only if the DA feature package is in software.

Trunks that handle TOPS traffic are specified as such in table TRKGRP. The call traffic arriving over these trunks is dedicated or non-dedicated, as specified in field STATCLAS. Dedicated trunks carry only one type of traffic. Non-dedicated can carry a combination of traffic.

The objective of AF0478 is to accept an incoming DA call, determine the call type, and route that call to an operator with the capability and hardware necessary for processing the call. AF0478 allows the assignment of DA call types and classes only if the DA feature package is present. For a complete description of this feature, refer to TOPS MP Terminal Support, TPC00003..

TOPS Call Processing Features (Call Processing) (continued)

Tables TOPSOIC, OICBC, and DABILL

This feature adds tables TOPSOIC, OICBC, and DABILL. These tables are used exclusively for DA. For a complete description of these tables refer to TOPS MP Terminal Support, TPC00003..

Tables TRKGRP and TOPS

Tables TRKGRP and TOPS were updated in BCS23. Table TRKGRP was updated to include the values OIC and DA in field STATCLAS. Changes to table TOPS made by this feature are in F6683 - TOPS MP DA/INT Queuing.

AF0479 - TOPS MP Expanded OGT and XFR Key Capability

This feature provides the capability to datafill the OGT key functions on the TOPS 04 and Multipurpose (MP) positions. Up to seven OGT key functions can be defined on the TOPS 04, and up to 100 OGT key functions can be defined on the TOPS MP position. This feature also provides the capability to transfer calls to Operator Positions that are capable of servicing DA calls. This transfer ability can be initiated from either a TOPS 04 or a TOPS MP position.

This document only describes the changes made to the base software because of this feature and does not include DA. For a complete description of this feature, refer to TOPS MP Terminal Support, TPC00003.

Outgoing trunk key enhancements

Key functions and prompts

Function	Description of information
OT	This field additionally prompts for the following fields: called number, screening type, and billing information.
XFR	This field prompts for a field (XFRTYPE) that contains the transfer type, depending on the transfer types available in the office.
ASST	No data is prompted for following this key.

AF0482 - TOPS MP Key Functions and Screen Updates

This feature implements the DA feature on the TOPS MP position. This is accomplished through the addition of two screens: DA search screen and DA billing screen. The DA search screen provides operators with the ability to display the listing data base. The DA billing screen enters billing information. The idle screen is defined as the screen displayed between active calls and as an idle version of the last service handled. For a complete description of this feature, refer to TOPS MP Terminal Support, TPC00003..

TOPS Call Processing Features (Call Processing) (continued)

Basic TOPS data guidelines (BCS24)

This TOPS data guideline contains recommendations for datafilling TOPS offices.

Table CLLI

Recommendations for datafilling table CLLI are as follows:

1. TOPS Pseudo CLLIs present:
   a. TOPSPOS: Sized to total number of TOPS positions + growth (CHKTOPS)
   b. TOPSPOSDATA: Sized to total number of TOPS positions + growth. Must equal TOPSPOS value.
   c. TOPSDEV: Sized to total number of TOPS devices + growth
   d. DMODEM: Sized to total number of digital modem circuits + growth
   e. CF3P: Sized to 3 times the total number of 3 port conference circuits (including 6 port conference circuits datafilled in table CONF3PR.
   f. RCVRMF: Sized to 4 times the number of MF receivers
2. All TOPS Trunk Groups present:
   a. TOPS TRKGRPs adequately sized?
3. Check for the following other trunking types/applications (reference Trunking Questionnaire, if available):
   a. LOOPAROUND: OP <--> TOPS 2-way looparaound configuration. Optional OP --> TOPS, IT <-- OI one-way, 4 trunk group configuration. DMS-100/200 TOPS only.

      Note on looparound trunks: ALL traffic from DMS-100 side of DMS-100/200 TOPS switch MUST route to TOPS through looparound trunks. ALL calls completing from TOPS to DMS-100 side must route through looparound trunks.
   b. RONI: Incoming from LAMA office
   c. ATC: TOPS EA trunking to/from carriers for FGC or FGD
   d. Verification: Dedicated IT trunk groups to end offices
   e. Verification with scrambler: Dedicated IT trunk groups OG/IC to/from scrambler (2X88AAs)
   f. OC voice links: Outgoing IT in Host/incoming IT in Remote

g. CCIS VFLs (Voice Frequency Links): TL trunk group (normal application: Host OC or Standalone TOPS)

h. SOC (Supplemental OC Trunks): IT between Host and Remote (verification and delay calls)

4. Coin Signaling for Non-operator Calls

With equal access, calls that previously had routed directly to the long distance carrier now route through an access tandem on TOPS trunks. This has led to problems with the enablement of digitone keypads on coin phones for certain combinations of end offices and coin station types. In particular, problems have arisen for 800 calls and for calls dialed 950-WXXX (Feature Group B calls). According to LSSGR FSD 20-24-0399, Section 3.3.1, it is the responsibility of the end office to ensure that the digitone keypad on coin phones are enabled when these calls arrive at the access tandem. However, some calls arrive with the keypad in a disabled state and subscribers are unable to use them once connected to an IC.

Since some end offices do not leave the key pads in the correct state, the responsibility has evolved to the access tandem. A special CLLI known as TOPSCOINENABLE was created to allow Operating Companies to have complete flexibility in the enablement of keypads. The Operating Company can place this CLLI in the beginning of a route list that routes the call to an IC. For example, assume that an Operating Company is routing calls on trunk group OGEACAR1 to an IC. The datafill for enabling the keypad is:

999 (S D TOPSCOINENABLE) (N D OGEACAR1 0 N N) $

A coin enable signal is sent to enable the keypad for all coin calls using this route list. The call then routes to OGEACAR1. If a coin call originates from an end office that left the keypad in the correct state, it should be routed to another route list without the CLLI to avoid the additional post dial delay incurred by the coin enable signal.

There are three other types of coin signals that may be specified in a route list: pad disable, coin collect, and coin return. It is conceivable that Operating Companies need to send these signals for some calls on TOPS trunks that do not route to TOPS operators. To allow this, three fixed CLLIs have been created: TOPSCOINDISABLE,

TOPS Call Processing Features (Call Processing) (continued)

TOPSCOINCOLLECT, and TOPSCOINRETURN. More than one of these CLLIs may appear in a route list if required.

Note: To use these CLLIs, a cold restart must occur after they are added to table CLLI.

These special coin CLLIs must appear at the beginning of a route list (that is, before any trunk CLLIs). They can only be used for calls that originate on TOPS trunks and that are not completed by a TOPS operator. In particular, these CLLIs can be used for CAMA calls that route to a TOPS operator and calls that are transferred to an IC's operator services since neither of these are completed by TOPS.

Non-coin calls can use route lists with special coin CLLIs. The software determines that the calls are non-coin and no coin signal is attempted.

Each coin signal added to a route list adds approximately 3 seconds of post dial delay to each coin call using the route since that time is required to send the signal.

Table TRKGRP

Recommendations for datafilling table TRKGRP are as follows:

1. Is this job an extension to an existing DMS-200 or DMS-100/200 where SC trunk groups are currently handling traffic?
   a. If YES, will any TOPS TRKGRPs submitted by the Operating Company be replacing any SC trunk groups?
   b. If YES, check to be sure existing SC CLLIs and new TOPS CLLIs are NOT duplicates and that duplicate trunk member assignments have not been made.
2. If available, analyze Trunking Questionnaire for each (TOPS, ATC, RONI) trunk group and compare to corresponding fields on each trunk group.

3. Individual TOPS trunk group datafill correctness checks:
   a. Standard Pretranslator

Standard Pretranslator

```
Domestic:
2   9  N  NL 0 NA

International:
12 19  N  NL 1 IN  (must have table CCTR)

FGD:
0ZZXXX  0ZZXXX T DD 6 OFRT Y 6 6 NONE (domestic)
1NXXXX  1NXXXX T DD 6 OFRT Y 6 6 NONE (int'l)
```

   b. Local Calling Area (LCA) name datafilled on TRKGRP or table TOPSBC. Datafill only one of the tables, not both.
   c. CLSVSCRC name datafilled here OR in table TOPSBC. DO NOT datafill CLSVSCRC with same or different names in both tables.
   d. NOBILLCD field must be adequately sized for all NXXs served by the trunk group PLUS growth, PLUS special billing codes and 000 entry (see table TOPSBC) if required.
   e. Correct HNPA served by this trunk group listed as STS. If trunk group serves two NPAs, one must be completely screened in CLSVSCRC.
   f. Direction of trunk group must agree between TRKGRP and TRKSGRP.
   g. If CLGID=BELL and STNOWAIT=Y, then TRKSGRP must be MF per TOPS Call Processing (OSB00101), AF0720 (BCS24).
   h. CLGID (BELL, OSS, ONI, and others) agree with Trunking Questionnaire and all subfields filled correctly.
   i. PADDATA entry must be valid in table PADDATA.
   j. Basic STATCLAS information:
      - COMBINED - End office combines CN/NCN/HOTEL traffic for 0+, 0- and 1+ calls. EO must be able to generate ST, STP, ST2P, and ST3P start signals and appropriate information digits (one or

TOPS Call Processing Features (Call Processing) (continued)

two) on ANI spill. ANI 6 or 7 must be present to reference call to table SPLDNID.

- HOTEL - Dedicated hotel traffic. Checks SPLDNID for VQ or AQ devices.
- COIN - Dedicated coin traffic. DMS switch reads ST and STP to determine 1+ and 0+/-, respectively. ANI ID digit 7 indexes the call into table SPLDNID to determine the restriction. ANI ID digit 6 on a COIN trunk group is treated as ANIFAIL.
- NONCOIN - Dedicated non-coin traffic. DMS switch reads ST and STP to determine 1+ and 0+/-. Both ANI ID digits 6 and 7 indexes the call into table SPLDNID to determine the proper disposition of the call.
- DNLOOKUP - DMS switch looks up calling number in table SPLDNID to determine calling station type. If number is NOT found, it is assumed NONCOIN. This is true even for dedicated coin traffic trunk groups using this station class.
- RESTBIL - Handles calls as COMBINED, except will index into table SPLDNID on every call without ANI 6 or 7 present in the ANI spill. If calling number NOT found, the start signal determines call type as if STATCLAS=COMBINED. If calling number is found, appropriate restriction is presented to operator through tables RESTBIL and RESTAMA. ANI 6 and 7 are not sent.
- CAMA - Dedicated CAMA (1+) traffic from end offices that do not send an ST on the ANI (Example, KP+1 sent for ONI). All traffic treated as CAMA and is presented to an operator if ONI or ANIFAIL.

k. TIMEOUT field (after STATCLAS) set to Y for DP trunk groups.

l. If table SPLDNID identifies the calling number as AQHTL or VQHTL, this allows the DMS switch to identify that line as a hotel line and then regenerate an ANI ID digit of 6 to the IC on inter-LATA hotel calls.

m. If DISPLAY has value other than 0, reference table TOPSDISP.

n. Field TRAFCLS=CA if trunk group carries dedicated CAMA (1+) traffic. This provides proper operator display on CAMA calls.

Otherwise set TRAFCLS=SP if the trunk group carries any 0+, 1+ coin, or 1+ hotel traffic.

4. Analyze other trunk group data:

   a. LOOPAROUNDS (DMS-100/200/TOPS only) Check for standard pretranslator: 2 9 N NL 0 NA. Direction can be 2W (TOPS, OP) or optional one-way (TOPS, OP; OI, IT). Station class on TOPS group should be COMBINED. CLGID should be BELL for single ID digit, or OSS for double ID digits. Number of billcodes should be adequately sized for all DMS-100 NXXs plus growth (see table TOPSBC).

   b. OP (DMS-100/200 TOPS only) If field STATCLAS=COMBINED on TOPS looparound, field TRAFTYPE=MIX and STNCLS=COMB on OP. If CLGID=BELL on TOPS group, then field EA=N on OP. If CLGID=OSS on TOPS group, then EA=Y on OP. Set ORIGSRC + LCL.

   c. Standard pretranslator should allow for toll completing and verification calls.

MAP display example for standard pretranslator

```
2      9    N  NP 0 NA  (toll completing)
002   009   N  OA 2 NA  (verification)
```

   d. 00 is prefixed in OFRT from VERIFY standard pretranslator in table OPRTRANS. The 00 is stripped off in the OP or OI standard pretranslator and call type is marked as OA. Verification call completes through VER90 circuit in 100. Looparound direction can be 2W, or outgoing one-way trunking configuration using OI trunk group for toll completing and verification. Field MODE=CV.

   e. RONI - Direction must be 2W. N+4 TRKMEM assignments for voice and data when using digital circuits (see RONI Data Guideline or TOPS Remote CAMA, OSB00101). Else voice channel assigned to even numbered circuit and data assigned to odd circuit if analog trunks used; consecutive assignments on the same card.

   f. ATC - Carrier name must be in table OCCINFO. SIGTYPE=BELLI if traditional signaling is used, or BELLII if OSS (double ANI ID digits) is used. STNCLS should be set to COMB if trunk group outpulses combined traffic and all 4 start signals. NONCOMB if

TOPS Call Processing Features (Call Processing) (continued)

trunk group is dedicated coin or non-coin traffic, and DMS switch sends ST or STP to identify 0+/- and 1+.

g. VERIFICATION - Dedicated IT trunk groups should be set up to each end office with busy line verify capabilities. Verification calls may also be tandemed between OC Host and Remotes through Supplemental OC (SOC) trunk groups until the dedicated verification trunk to an end office is reached. Must use T selector in STDPRT.

h. SCRAMBLER - Dedicated hardwired trunks (2X88AA) to and from scrambler circuit. IT trunk group OG accessed from VERIFY tuple in table OPRTRANS. IT trunk group IC from scrambler utilizes a standard pretranslator to route each NXX to the appropriate dedicated verification trunk group to each end office and block NXXs to EOs without verify capability.

i. OC VLs - OC Voice Links. OG IT trunk group in Host; IC IT in Remote.

j. CCIS VFLs - TL trunk group types; CLLIs appear in table C6LKSET. Normal application: Host OC or standalone TOPS.

k. SOC - Supplemental OC trunk groups used in Host/Remote OC configuration for communication (i.e., verification or delay calls) between Host and Remote(s). IT trunk group type. Direction should be 2W.

Table TRKSGRP

Recommendations for datafilling table TRKSGRP are as follows:

1. Direction corresponds with TRKGRP datafill for each TRKSGRP
2. In a TOPS EA environment, coin control fields on individual incoming TOPS TRKSGRP and its associated outgoing ATC TRKSGRP must match.
3. Trunk subgroups with post-pay coin phones must have CCONT=NO.
4. Specify IPULSTYP=DP and ISTARTSG=IM in HOST voice link TRKSGRP data. Specify OPULTYP=DP and OSTARTSG=IM in REMOTE voice link TRKSGRP data.
5. GLAREYD=Y on one looparound trunk group and N on the other group.
6. RONI trunks: DIR=2W, IPULSTYP,OPULSTYP=NP, ISTARTSG,OSTARTSG=IM, and IDGTIME=0

TOPS Call Processing Features (Call Processing) (continued)

Table TRKMEM

Recommendations for datafilling table TRKMEM are as follows:

1. OC voice link members assigned (not data links). Same quantities and identical VL numbers in Host and Remote.
2. SS7 data link members assigned. Voice paths are handled by regular trunking.
3. CCIS6 VFL members assigned. (Normal application: Host OC or Standalone TOPS).
4. Looparound (OP and TOPS) members assigned (optional OI, IT for one-way configuration). DMS-100/200/TOPS only.
5. SOC trunk members assigned.
6. Verification scrambler interface members assigned (OG and IC).

Table LINEATTR

Recommendations for datafilling table LINEATTR are as follows:

1. In DMS-100/200/TOPS only.
2. Zero minus position names used should reference a position that route the call as follows:
   a. EAEO: LOOPAROUNDs only.
   b. Non-EAEO: TOPSPOS then alternate route to LOOPAROUNDs.
3. Do NOT use position name TOPS to route lines in a DMS-100/200/TOPS. Reserve TOPS for generic TOPS trunk group routing of calls requiring operator intervention.

Table POSITION

Recommendations for datafilling table POSITION are as follows:

1. Position TOPS should read: TOPS S TOPSPOS
2. In DMS-100/200/TOPS, position named in field ZEROMPOS in table LINEATTR must go to OFRT to delete the 0 before hitting OP trunk.
3. Position CAMA should route to LOOPAROUND trunk group only in DMS-100/200/TOPS. CAMA cannot route calls directly to TOPSPOS.
4. In a DMS-200/TOPS where SC trunk group types are required (that is, 1+ CN/NCN calls to the world or to TSPS) CAMA may be datafilled to process calls out to TSPS through OP trunk group or CAMA position circuits (table CPOS). SC trunk groups should only be used in a TOPS office for special applications that do not work with a TOPS trunk group.

TOPS Call Processing Features (Call Processing) (continued)

5. Other position names (CTOP, RTE1, RTE2, RTE3, RTE4) should be used for 0- from table LINEATTR and calls routing through standard pretranslator P selectors.
6. In a DMS-100/200, use a C selector in table POSITION from line standard pretranslators to handle domestic and international applications together:

MAP display example for table POSITION

```
RTE1   C  T  OFRT 105  T  OFRT106  (See table OFRT)
```

7. In a DMS-200/TOPS, TOPS S TOPSPOS processes national and international calls correctly.
8. Datafill TSPS in DMS-100/200/TOPS if FGC international traffic is being routed directly to the carrier's operator services through the STDPRT (T selector) and bypassing country code screening in the switch. Outpulsing to carrier begins after two digits (01) on international calls.

Table PFXTREAT

Recommendations for datafilling table PFXTREAT are as follows:

1. 0+ local calls are allowed by specifying the calling service class (COIN, HOTEL, STATION, and/or RESTRICT) in table OFCENG, parameter TOPS_0PLUS_LOCAL.
2. Datafill required to cause 0+ local calls incoming on TOPS trunks to display as local to the operator:
3. OPTL OA Y OA MSLC
4. In a DMS-100/200/TOPS, PFXTREAT must be datafilled to allow lines to originate 0+ local calls: OA Y OA UNDT. Therefore, two local calling area tables must be assigned for the lines on a DMS-100/200/TOPS: one for the line side and one for the incoming TOPS looparound trunk.

   Example of datafill in DMS-100/200/TOPS:

MAP display example for table PFXTREAT

```
MAND  OA  Y  OA  UNDT  (lines)
OPTL  OA  Y  OA  MSLC  (trunks)
```

TOPS Call Processing Features (Call Processing) (continued)

Table OFRT

Recommendations for datafilling table OFRT are as follows:

1. Dedicated verification trunking must route out of this table whether or not a scrambler circuit is used. Calls index OFRT through either the standard pretranslator specified in table OPRTRANS, tuple VERIFY, or the standard pretranslator associated with the incoming IT trunk group from the scrambler.
2. Unique routes may require datafilling for both domestic and international calls routing to TOPS (DMS-100/200/TOPS). See table POSITION.

MAP display example for table OFRT

```
DOMESTIC:         105  S D  TOPSPOS
                               N D  LOOP100 0 N N $
INTERNATIONAL:     106  S D  TOPSPOS
                        N D  LOOP100 0 1 N $
```

3. The digit 1 must be prefixed on the international route if the digits have been verified already in table CCTR before routing to TOPS looparound trunks. This prefixing the digit 1 is NOT required for international calls on incoming TOPS TRKGRPs or calls from lines through standard pretranslators using T selectors to bypass preliminary country code screening before processing the call to TOPS directly or to looparound trunks.
4. Ensure table OFRT translations are datafilled to generically handle all trunks busy (ATB) conditions. Alternate routing of trunk route references to T120 and LKOUT in table OFRT is NOT required. Tables OFFTREAT and LNT handle ATB conditions generically through treatment GNCT. Set treatment GNCT to desired tone or announcement in OFFTREAT and LNT. IFS TREATCHK program ensure that OFFTREATs do not route to LKOUT and that LNTs route to LKOUT.
5. Do NOT use EAPEG in a TOPSEA Feature Group C (FGC) environment when routing calls to FGC ICs. This pseudo CLLI is used for Access Tandems and EAEOs and is NOT compatible with TOPS FGC routing.

TOPS Call Processing Features (Call Processing) (continued)

Table TMTCNTL

Recommendations for datafilling table TMTCNTL are as follows:

1. Ensure datafill of GNCT with valid results (TREATCHK).
2. Ensure datafill of EMR3 and EMR4 with valid OFRTs. This OFRT list can include an entry of S TOPSPOS to re-queue deflected calls back to TOPS with all TOPS Recording Unit (RU) data intact.
3. Ensure datafill of MANL in LNT with valid result to TOPS looparounds (DMS-100/200/TOPS only).

TOPS Call Processing Features (Call Processing) (continued)

Tables STDPRTCT/STDPRT

Recommendations for datafilling tables STDPRTCT/STDPRT are as follows:

1. TOPS trunk group (including looparound) datafilled as follows:

MAP display example for tables STDPRTCT/STDPRT

```
12    19  N  NL  1  IN
 2     9  N  NL  0  NA
```

2. Datafilled as follows for DMS-100/200/TOPS lines:

MAP display example for tables STDPRTCT/STDPRT

```
POTS:  010   010   D  VACT
       011   011   N  DD   3   IN
       012   019   P  OA   2   IN RTE1
or
                   T  OA   1   OFRT  X  7  13  NONE

        02    09   P  OA   1   NA    RTE1
        12    19   N  DD   1   NA
         2     9   N  NP   0   NA
```

a. (OFRT X routes to looparounds)

MAP display example for tables STDPRTCT/STDPRT

```
COIN:   010  010        D   VACT
        011  011        P   DD  3   IN   RTE1
or
                    T   DD      2   OFRT X 7 13 NONE
        012     019 P       OA  2   IN   RTE1
or
                    T       OA  1   OFRT X 7 13 NONE
        02   09     P       OA  1   NA   RTE1
        12   19     P       DD  1   NA   RTE1
         2    9     N       NP  0   NA
```

b. Incoming side of 2W OP looparound from TOPS:

TOPS Call Processing Features (Call Processing) (continued)

MAP display example for tables STDPRTCT/STDPRT

```
00   00   N  OA   2   NA    (verification)
 2    9   N  NP   0   NA    (completing)
```

00 is prefixed in table OFRT to the NXX served by the DMS-100/200/TOPS when the call has originated as a verification call. This 00 distinguishes the verification call on the looparound trunk group that is a combined verification/toll completing group. The 00 is ONLY prefixed in this case and is not required for dedicated verification trunk groups to end offices.

Table OPRTRANS

Used for screening operator originated calls. The tuples are associated with a particular call type or operator keystroke. Operator keying sequences are described in *TOPS MP Operator Guide*.

Ensure that fixed tuples OPERATOR, VERIFY, DELAY, MCCS and SPLVFY are datafilled with logical standard pretranslators as follows (SPLVFY replaces TOPSLINE in BCS27 in both host and remote offices):

1. Field LCANAME should be left at default (NLCA) in all OPRTRANS tuples. A class of service screening table must be specified in OPERATOR tuple if the TOPS serves more than one NPA, to screen codes within the NPA that is not specified as the SNPA of the TOPS trunk group.

   a. OPERATOR: Used on calls where operator uses a keying sequence to establish a forward connection. Datafill required operator (inward) codes and route to appropriate office route. Datafill NXXs served by the 100 side of a DMS-100/200/TOPS and route to the looparound trunk group. All other codes can complete through the HNPACONT.HNPACODE translations.

      Note: If the operator enters an 800+ toll-free number (Canadian services only), initial translations are based on datafill in tables TOPSPARM and HNPACONT. Refer to *800Plus and End-Office Display Service Guide*, 297-5151-022.

   b. All calls that have connected to TOPS (OA or DD) are screened through this OPERATOR tuple in OPRTRANS upon release from the position.

   c. Only one SNPA can be specified for calls that use the OPERATOR tuple. Therefore, if a switch serves more than one NPA, a

SCRNCLAS must be named for OPERATOR, and the screening for the other NPAs must be done through class of service screening.

d. VERIFY: (WITHOUT SCRAMBLER) Datafill each NXX of each end office that have verification done by the TOPS. These NXXs should use T selectors to table OFRT where the verification trunk group is datafilled for each office. (WITH SCRAMBLER) Datafill 2 9 T OA 0 OFRT X 7 7 NONE. OFRT X routes the call to the OG IT TRKGRP to the scrambler and back into the DMS switch on a hardwired IC IT TRKGRP. This IC IT has a standard pretranslator that route each office code to its dedicated verification TRKGRP. Associated with the busy line verify keying sequence on TOPS IV or TOPS MP.

e. DELAY: When KP BACK key is depressed, the software automatically prefixes the SNPA of table OPRTRANS tuple DELAY on all 7-digit delay (back) calls. The DELAY standard pretranslator must remove this NPA (that is, 919 919 N DD 3 NA). The KP BACK and RLS BACK keys access DELAY translations.

f. SPLVFY: Datatools assign this tuple the same data as OPERATOR when upgrading to BCS27. It is used when billing to a third number has been requested and the operator is required to contact the third party for verbal acceptance of billing. The keystrokes using these

TOPS Call Processing Features (Call Processing) (continued)

translations are KP SPL + START on a TOPS IV position, or VFY SPL hardkey or FNCTS + 34 + START on a TOPS MP position.

g. MCCS: Used to handle MCCS sequence calls. Standard pretranslator is set up as follows:

MAP display example for table OPRTRANS

```
00    00   D VACT
01    01   N OA  2  IN
02    07   N OA  1  NA
0800  0800 D UNCA
0801  0899 N OA  1  NA
0900  0900 D UNCA
0901  0910 N OA  1  NA
0911  0911 D UNCA
0912  0999 N OA  1  NA
1     1    D VACT
2     7    N OA  0  NA
800   800  D UNCA
801   899  N OA  0  NA
900   900  D UNCA
901   910  N OA  0  NA
911   911  D UNCA
912   999  N OA  0  NA
```

1. Codes to complete to lines in DMS-100/200/TOPS must be routed to looparounds through OFRTs.
2. OVERSEAS: Accessed on international calls released from a TOPS position. Should never be accessed in a TOPSEA environment except with TICS.
3.

If the operator uses the KP OVS key, the call is automatically marked as TRANSYS=IN before any translation is done. Assuming no prefix digits are entered by the operator, PRTNM=NPRT means that pretranslation is skipped and table CCTR is immediately accessed. The route for non-Equal Access calls are taken from CCTR (see table CCTR) and the route for TICS calls is taken from the class of service screening table named in TOPEATRK.

Note 1: Table LATAXLA is not accessed on calls routed through the DELAY, VERIFY or SPLVFY tuples in OPRTRANS. Calls routing through OPERATOR translations and MCCS sequence calls do use LATAXLA to check LATA status. When the first MCCS call is intra-LATA and the next call in the sequence is inter-LATA, the software looks for the carrier in table TOPEATRK or DNPIC. If the carrier is served by TICS (OPSERV=SERV

in table TOPEACAR), the call is completed. If the carrier is marked NOSERV in TOPEACAR, the call is blocked and the subscriber hears MCCS announcement #15.

Note 2: Depressing the NO AMA key at the TOPS position in an emergency situation overrides LATA screening and allows an inter-LATA call to route through national translations (HNPACODE), if the carrier that normally routes the call is marked NOSERV in table TOPEACAR. If the TOPS switch provides TICS for the carrier that normally handles the call (OPSERV=SERV), the call remains a carrier call and the operator completes the emergency call through the carrier's network.

Table TOPSBC

Recommendations for datafilling table TOPSBC are as follows:

1. Ensure that all TOPS trunk groups (including looparound in DMS-100/200/TOPS) are datafilled.
2. Ensure that all unique billcodes datafilled agree completely with table CLGTRF (NXXs) datafill.
3. CHGCLASS=TOPS for both NT and Bellcore AMA formats.
4. There is NO requirement to datafill a 000 billcode nil entry for each TRKGRP in table TOPSBC; however, a 000 entry may be be required if the tariff or operator procedure requires the operator to place an emergency call when ANI is unavailable and the calling number cannot be obtained. In this case, the 000 entry should appear as the first for the trunk group in table TOPSBC.
5. TOPS trunk groups must have at least one entry in table TRKMEM before being added to TOPSBC.
6. TOPSBC specifies different routing depending on the originating NXX. Different LCA screening tables and Class of Service Screening tables can be used if field OHNXXSCR=Y on the TOPS trunk group. See table TRKGRP.
7. If LCA or CLSVSCRC names are specified here, ensure that they are not also datafilled on the TOPS TRKGRP.
8. If providing operator services for FX hotel calls (table FXDNMAP), enter the actual hotel NXX in TOPSBC. This is used in the case of ANI fail.

Table TOPSENTC

Recommendations for datafilling table TOPSENTC are as follows:

1. Used with TOPS NT AMA format only.
2. Must have entry CHGCLASS=TOPS and ENTCODE=20.

TOPS Call Processing Features (Call Processing) (continued)

Table TOPSPOS

Recommendations for datafilling table TOPSPOS are as follows:

1. Datafill only in a standalone TOPS or TOPS OC HOST environment.
2. Check report derived from CI questionnaire for correct number of TOPS positions and correct interface circuit.
3. Maximum number of positions is 394 due to limitation of a 32K vast area size. (TOPS DA Call Processing, OSDA0101,, feature F6952)

Table TOPSDEV

Recommendations for datafilling table TOPSDEV are as follows:

1. Datafill in any TOPS environment (OC Remote: NOTIS, HADS, VQ, AQ, and RECORD).
2. Check report derived from CI questionnaire for correct number of TOPS devices and correct interface circuit.
3. Two unique VQ assignments can be made. The DMS switch does not allow three VQ devices.

Table TOPSDISP

The recommendation for datafilling table TOPSDISP is as follows:

1. Datafill only with display numbers from TOPS trunk group. Do not datafill DISP_NO=0.

Table TOPSENTC

Recommendations for datafilling table TOPSENTC are as follows:

1. Only required in offices with NT format AMA.
2. For NT format, ensure TOPS is datafilled as the entry code with a value of 20.

Tables TOPS and TOPSAMA

Recommendations for datafilling table TOPSENTC are as follows:

1. These tables are automatically datafilled during load build and changes to these entries should be made through REP command.
2. Can only route to TOPS from TOPS, IT or ATC trunk group types. Otherwise, RODR treatment is given.
3. TOPSAMA is only required in NT AMA format offices
4. Any call routed through a T selector to table TOPS has the called number deleted when presented to an operator.

TOPS Call Processing Features (Call Processing) (continued)

Table TOPSTRBL

Recommendations for datafilling table TOPSTRBL are as follows:

1. Analyze for an adequate amount of trouble codes (range: 00-99) and proper disposition.
2. The most commonly used trouble dispositions are SNAC and NOTISDEV. If SNAC is chosen as the trouble disposition, then a log report is created when the operator depresses the KP TRBL key and the appropriate trouble code (digits in TOPSTRBL). This report is generated at the operating company's printer specified in LOGDEV using LOGCLASSes SNAC100, SNAC101, SNAC102, and SNAC103. If NOTISDEV is chosen as the trouble disposition, then a record is printed at the NOTIS TOPS device datafilled in table TOPSDEV.

   If NOTISDEV is the datafilled trouble disposition, the operating company can NOT receive simultaneous SNAC log reports of operator troubles. Moreover, if SNAC is the trouble disposition, then NOTIS Format records are not created.
3. Must have entries in this table to enable the KP TRBL key on the TOPS position.
4. TOPS NOTIS FORMAT, OSB00101, required to datafill NOTIS in TOPSTRBL.

Table CHGADJKY

Recommendations for datafilling table CHGADJKY are as follows:

1. For STANDARD charge adjusts, the index into table CHGADJKY is recorded in table 91 on the AMA record.
2. The number the operator keys with KP CHG ADJ affects the AMA record (Call Code 107) as follows:
   - WALKAWAY Sets Field 22, Charge Indicator, to Coin Difference (1)
   - PARTCHG Sets Field 22, Charge Indicator, to Part Charge (4)
   - CNCREDIT Sets Field 36, Coin Credit Indicator, to Coin Credit (1)

Table DMODEM

The recommendation for datafilling table DMODEM is as follows:

This table is extracted by Dept. 4481 from the job's hardware equipment file. Ensure the number of digital modem circuits datafilled corresponds to the job's CI and table ATKINV.

TOPS Call Processing Features (Call Processing) (continued)

Tables RAO and VH

Recommendations for datafilling table RAO are as follows:

1. These tables are extracted by Dept. 4481. Ensure they are datafilled.
2. Offices with MCCS or EABS usually has 000-999 datafilled in table RAO, since a local check of the RAO code or NPA is performed prior to the database query being sent. Non-TICS offices actually require only the intra-LATA NPAs and RAO codes; TICS offices require all valid NPAs and RAO codes.
3. Tables DOMBILL, REGNUM, and HOTLIST are checked for restrictions on calling card calls using MCCS or EABS (LIDB) prior to accessing the database. Datafill in these tables is not required, but any restrictions datafilled are applied.
4. Tables RAOCHECK, NPACHECK, CHKDIGIT, OVSBILL, OVSCC, and OVSCCYL are part of a validity check on “bill to" numbers, and are obsolete in today's calling card validation/billed number screening environment.

Table OPRDAT

Recommendations for datafilling table OPRDAT are as follows:

1. The highest number that may be assigned in OPRDAT is defined by office parameter TOPS_MAX_OPERATOR_NUM in table OFCENG (CHKTOPS). Changing the value of the parameter requires that all data be deleted from OPRDAT.
2. All operator numbers should be datafilled initially as:

MAP display example for table OPRDAT

```
 OPRNUM     OPRVAR
--------   --------
  1          OPR
```

   All modifications should be made using FADS/TADS commands.
3. Table appears only in TOPS standalone or Host OC office.

Tables CLGSET and ZENITH

Recommendations for datafilling table CLGSET are as follows:

1. If every NXX in an NPA should be allowed access to every Zenith (sometimes called Enterprise) number in that particular NPA, then datafilling UNRESTRICTED as the calling point set allows complete

access to all Zenith numbers within that NPA without datafilling each NXX in table CLGSET.

2. Table ZENITH is automatically accessed during call processing when the operator keys in KP FWD + 800 + 5D + START. The 800 + 5D, by definition, is seen as a ZENITH number by the DMS switch.

Tables BELLCAT and OSSCAT

Recommendations for datafilling table BELLCAT are as follows:

1. Table BELLCAT analyzes ANI ID digits incoming on TOPS trunk groups with traditional signaling (CLGID=BELL). Associates an ID digit with a legal ANI format used for billing, screening, and routing purposes. Ensure digits 0-2 and 6-9 are datafilled.
2. Table OSSCAT analyzes the double ANI ID digits incoming on TOPS trunk groups with CLGID= OSS, EAOSS, or EAOSSIC. Associates ID digits with expected ANI format used for billing, screening, and routing. Ensure 00-09 datafilled along with any other applicable ANI digit combinations.
3. These tables are filled with default data at load build. They can be modified by the operating company with the CHA command at the MAP terminal or REP command during DMOPRO.

Table EAANIID

Recommendations for datafilling table EAANIID are as follows:

1. This table must be present in TOPS offices that use either traditional signaling (BELLI) or operator services signaling (BELLII) on outgoing ATC trunk groups.
2. Ensure datafill of all applicable ANI ID information (i.e., ANISUCC, ONI, HANIFL, and so on).
3. Ensure all ANI digits that appear in tables OSSCAT and BELLCAT are mapped in EAANIID. If an ANI digit does not have corresponding digits in OSS, datafill DC against it (and vice versa).
4. This table is NOT default - must be datafilled by the operating company.
5. Table EAANIID is not structured to handle ANI ID digits 3, 4, or 5. These service observed digits are not passed to a carrier. The DMS switch receives a 3 and passes a 0, receives a 4 and passes a 1, and receives a 5 and passes a 2.

TOPS Call Processing Features (Call Processing) (continued)

Tables RESTAMA and RESTBIL

Recommendations for datafilling table RESTAMA are as follows:

1. Table RESTAMA allows the operating company to specify what should be placed in the calling service class field of the AMA record for each billing class defined in table RESTBIL. No entry can be made in RESTAMA unless the BILCLAS appears in RESTBIL.
2. Table RESTBIL defines billing classes and to match each defined class with a screen display (definable by the operating company) and up to six valid types of billing. Should the operating company decide not to specify any screen display, a blank entry in SCRNDISP results in a blank field on the screen.
3. These tables are indexed when STATCLAS=RESTBIL on the incoming TOPS trunk group, and table SPLDNID specifies RSTRCTD and a billing class index for that particular calling number.
4. When 0+800 is dialed from a restricted (collect only) line, class charging the call as auto collect (key AUTO COL) allows the call to complete. If COLLECT is not listed as a BILTYP in RESTBIL, auto collect calls from the line cannot be completed.

Table CCTR

Recommendations for datafilling table CCTR are as follows:

1. This table is required for TOPSEA FGC to validate that a correct “true country code" has been dialed by the subscriber, once the call has been identified as international by the incoming TOPS trunk group STDPRT: 12 19 N NL 1 IN.
2. Once the dialed code has been validated in CCTR, table TOPEATRK, field OVSSCL is referenced for the appropriate route to the international carrier through table CLSVSCRC, subtable CLSVSCR.
3. Once TOPS Equal Access software has been activated, the basic concepts of billing and two-stage outpulsing for international calls changes. The DMS switch identifies the call as a carrier call, and tandems the call through TOPS EA translations to the appropriate carrier.
4. In a non-Equal Access environment, if the called number was entered by the operator (KP OVS key), an indicator is set in country code translations that causes the true country code to be replaced by the pseudo country code when the call is outpulsed through an office route using an N selector (refer to table OPRTRANS).
5. In offices with the TOPS Equal Access Software, non-EA handling is given to calls incoming on TOPS trunks if LATANM=NILLATA in TOPEATRK.

TOPS Call Processing Features (Call Processing) (continued)

Tables COUNTRY, OVSBILL, and OVSRS

Recommendations for datafilling table COUNTRY are as follows:

1. Default for countries NOT entered in table OVSBILL is COLLECT=ALW, PERONLY=N, and THIRDOK=Y.
2. To apply OVSBILL screening, the country must first be datafilled in table COUNTRY.
3. Tables COUNTRY and OVSRS are used in non-Equal Access TOPS offices, and in TOPS Equal Access switches providing TICS for international carriers.
4. Tables COUNTRY and OVSRS are not used in TOPS Equal Access on calls handled by carriers marked NOSERV in table TOPEACAR.

Table SPLDNID

Recommendations for datafilling table SPLDNID are as follows:

1. Table SPLDNID can be accessed in these ways:
   - ANI ID digit 6 or 7 in ANI spill
   - TOPS trunk group STATCLAS=DNLOOKUP or RESTBIL
   - Table TOPSACTS: Field ACTSSERV=MAYSERV
   - Table LCLRS: Field LC_TYPE=SPL
2. Individual entries of consecutive 10-digit numbers band into a single entry in the table.
3. Can enter a band of consecutive numbers by entering the digits that are common to the band. SPLDNID is a digilator, and finds a match on less than the full 10-digit number in the table.
4. Bands condense or expand when numbers are deleted or entered separately.
5. When providing operator services for FX hotel calls (table FXDNMAP), enter both the FX directory number and the actual hotel directory number in table SPLDNID.

Table FXDNMAP

Recommendations for datafilling table FXDNMAP are as follows:

1. Datafill the 10-digit number received as the calling number on the TOPS trunk. Map the received number to the actual billing number to be used in operator displays and billing.
2. See table SPLDNID.

TOPS Call Processing Features (Call Processing) (continued)

AF1784 - TOPS Base Changes - BCS28

Overview

AF1784 modifies the base TOPS software to accommodate services supported by TOPS MP. The changes made by this feature are as follows:

- Tables TOPSPOS, OPRDAT, and SERVICES are modified to allow the operating company to identify intercept calls as such.
- The SERVICE field is added to table TOPS. This field determines the service type of the call, before it is enqueued, based on call origination. The possible service types are TASERV, DASERV, and INTCSERV. This information allows greater queuing flexibility.
- Tables TOPSPOS and TOPSDEV are expanded to accommodate the TOPS Message Switch (available in the future).
- MCCS is modified to route a subscriber to an operator when the subscriber dials 11 or 12 following the bong tone.
- Tables TRKGRP, BCCODES, and SERVICES are modified to accommodate the Extended Bellcore AMA Format (EBAF).

AF1784 changes some base TOPS software to accommodate services supported by TOPS MP. The changes include the following:

- modifications to and expansion of data tables
- modifications to Mechanized Calling Card Service (MCCS).
- modification to TOPS queuing
- ability to assign priorities to queues.

Modifications to data tables

The following data tables have been modified:

- TOPSPOS
- OPRDAT
- SERVICES
- TOPS
- TOPSDEV
- TRKGRP
- BCCODES

The TOPSPOS, OPRDAT, and SERVICES tables are expanded to allow the operating company to identify intercept calls as such. In addition, the

TOPS Call Processing Features (Call Processing) (continued)

TOPSPOS table is expanded to include the TOPS Message Switch (TMS) as a valid peripheral to which the TPC can connect. The TOPSDEV table is also expanded to include TMS.

A field called Services is added to the TOPS table. This field identifies the service type of a call based on call origination. This information allows greater flexibility in the queuing of calls.

The TRKGRP, BCCODES, and SERVICES tables are expanded to include Extended Bellcore AMA Format (EBAF).

Modifications to MCCS

The Automatic Alternate Billing Service is a TOPS capability allowing automation of collect and third number billed calls in addition to calling card calls. With AABS, can key DTMF digits 11 to choose collect billing and 12 to choose third number billing for 0+ calls. AABS uses a bong tone as the initial prompt for subscriber input, followed by prompts describing the service options.

The Mechanized Calling Card Service also uses a bong tone as the initial prompt for subscriber input. The announcements that follow the initial prompts are different for AABS and MCCS, but if the subscriber provides DTMF input immediately after the bong tone, no announcements are given.

Because MCCS and AABS use the same bong tone as initial prompt, subscribers may be using MCCS when they think they are using AABS. This could happen if MCCS is used as backup service when AABS is overloaded, or if a subscriber tries to place an AABS call in an area where AABS is not provided. That is, a subscriber can enter 11 or 12 when connected to MCCS.

MCCS recognizes DTMF digits 11 and 12, and sends those calls immediately to a TOPS operator where the collect and third number billing types are supported. The subscriber does not hear any error announcements. The operator does not receive any indication of billing type, so the operator has to ask the subscriber for the type of billing desired.

Table SERVICES

The SERVICES table allows the operating company to identify the vendor servicing their Directory Assistance (DA) calls.

Prior to this feature, DA and Intercept capabilities existed as a single service: DA service. This feature breaks them into two distinct services by adding a tuple to the SERVICES table. This tuple specifies the vendor and the data link type that service intercept calls.

TOPS Call Processing Features (Call Processing) (continued)

The following exhibit summarizes the BCS28 changes to table SERVICES.

BCS28 Changes to table SERVICES

FIELD	DESCRIPTION OF CHANGE
INDEX	range of values is now 1-3, to include Intercept service.
SERVICE	range of values now includes INTCSERV.
LSDBID	range of values is 0-9999. This field is a refinement for DASERV and INTCSERV, and specifies the listing services database identifier used by the DASERV and INTCSERV. The value INTCSERV cannot be datafilled in table SERVICES in BCS28; it is enabled in a future software release.

MAP display example for table SERVICES

```
  INDEX     SERVDATA
 ____________________________________________________________
    1        TASERV
    2        DASERV CCI MPC 2138
```

Table TOPSDEV

The following exhibit summarizes the BCS28 changes for table TOPSDEV.

BCS28 Changes to table TOPSDEV

FIELD	DESCRIPTION OF CHANGE
CNTRLR	is now a selector field. The range of values now includes TMSTPC. TMSTPC cannot be datafilled in BCS28; it is enabled in a future software release.
MEMVAR	is now a subfield of field CNTRLR if CNTRLR is TPC or NT4X71
CARDCODE	is now a subfield of field CNTRLR if CNTRLR is TPC of NT4X71
PROTOCOL	is now a subfield of field CNTRLR if CNTRLR is TPC or NT4X71
TPCNO	is a subfield of CNTRLR is CNTRLR is TMSTPC. The range is 0-256.
MPNO	is a subfield of CNTRLR if CNTRLR is TMSTPC. The range is 0-3.

Table TRKGRP (RONI)

The following exhibit summarizes the BCS28 changes for table TRKGRP(RONI).

BCS28 Changes to table TRKGRP

FIELD	DESCRIPTION OF CHANGE
NBECID	range of values is 0-9999. This field specifies the Non-BOC Exchange Carrier identification associated with the RONI calls originating on the trunk.
SNPA	range of values is all valid SNPAs. This field specifies the Serving Numbering Plan Area associated with the RONI calls originating on the trunk.

Table BCCODES

As of BCS28, there are 14 additional callcodes that can be entered in table BCCODES. These are the call codes used by TOPS Expanded Bellcore AMA Format (EBAF).

Table OPRDAT

In BCS28, the SVCSET field is expanded to include INTCSERV as a valid service type. This entry produces an error message in BCS28 (INTC CAPABILITY NOT PROVIDED) but is supported in a future software release. Refer to the data schema section of this document for a description of all the fields in this table.

The TOPS Operator Data (OPRDAT) table lists all the operator numbers that have been assigned. Only operators with a number listed in this table can log in to a TOPS position. This table determines whether an operator can accept transfer calls.

BR20241 - Bell Canada AABS Support

A subscriber makes a 0+ call from a touch tone telephone. They incorrectly believe that they have Automated Alternate Billing Service (AABS) function and consequently enter an AABS code of 17 or 19 after the MCCS/ACCS bong tone. To make this situation less irritating to the subscriber, these calls are now routed to an operator (this procedure was already implemented for AABS codes 11 and 12). Also, if the subscriber enters a four-digit code following the MCCS/ACCS bong tone, and the first two digits of that code are 11, 12, 17, or 19, the call is now routed to an operator (with the last two digits of the code being ignored). Without this implementation, the subscriber receives an announcement stating that the number entered was invalid, and then is prompted to enter another number.

TOPS Call Processing Features (Call Processing) (continued)

UG000081 - Special Billing Numbers and 14-Digit DOM (MCCS)

Prior to this change, for both 10-digit special numbers in the RAO format and 14-digit RAO-format calling cards, the RAO code was datafilled in table RAO. This table determined whether or not the RAO code was valid. If the code was datafilled in the table, it was valid for both kinds of numbers. This did not allow an operating company to invalidate a code for the 10-digit special number case but allow it for the 14-digit RAO calling cards.

Beginning in BCS30, the RAO codes for the 10-digit special numbers must be datafilled in table RAO to be valid, but the RAO codes for the 14-digit calling cards must be datafilled in table RAOCHECK rather than table RAO. This allows the same RAO code to be valid for one type of number but not the other. If the code is valid for both types, it must be datafilled in both table RAO and table RAOCHECK.

In addition, table CHKDIGIT is no longer required to be datafilled for the RAO codes in table RAOCHECK.

AF2782 - TOPS Multiservice Queuing (base changes)

If AABS is supported, AABS code 11 places a collect call; 12 places a call billed to a third number; and, 17 and 19 are used to request the AABS announcements in English or French.

The Queue Management System (QMS) is a generic call, agent and force management system and consists of three basic components as shown in the following figure.

Queue Management System

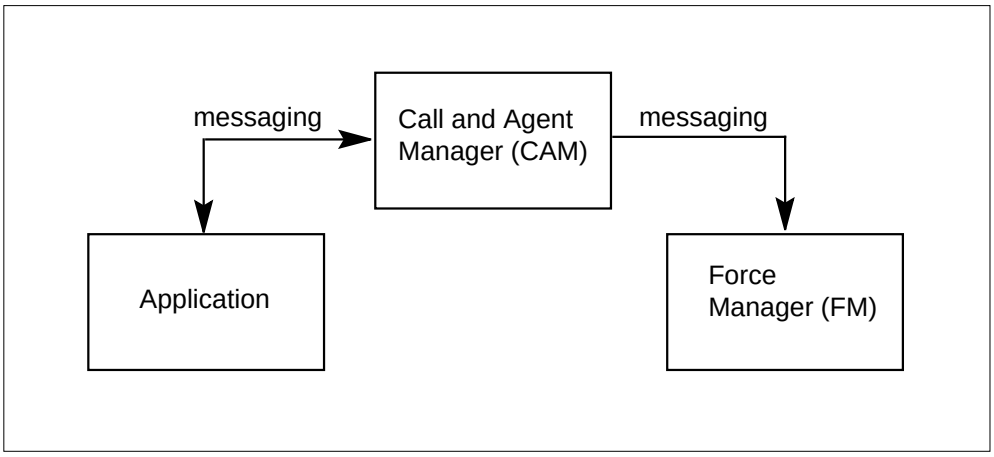

TOPS is the first application to use the queuing and Force Management capabilities provided by the QMS in BCS 33. This feature documents the base

changes to TOPS software required for the implementation of TOPS QMS in BCS 33. The base changes are mainly associated with the following:

- Existing table TOPSPOS
- New table TOPSTOPT.

AF3191 - OPP Base TOPS Changes

During operator call processing, situations can arise that result in the calling or called parties remaining attached to an unoccupied position. This can happen if an operator logs out with a call at position without releasing the call. Also, if a portion of the position datapath that is not controlled by the DMS switch is lost, the calling and called parties remain attached until the call is taken down. This could occur if the positions are connected by a Local Area Network (LAN), and the LAN goes down.

For the case in which an operator logs out before releasing the call, a display appears on the In-Charge position for the operator's team. In the less likely event that the datapath has been lost, there are no such displays, since the position cannot send status information to the DMS switch. Without operator involvement, the calling and called parties, if present, eventually go on-hook in an attempt to disconnect.

This feature introduces a position sanity timer, which is activated when the DMS switch receives indication that all attached parties are onhook. If the timer expires, the switch automatically takes the call down and generates a log, thereby freeing resources and alerting operating company personnel of the problem.

Datafill is as follows:

- Table TOPSPARM, parameter POSITION_SANITY_TIMER

  This is a new table that sets the position sanitary timer initial value.
- Table TOPSPOS

  Field PROTOCOL is changed to allow specification of OPP.

CM09734 - TOPS MP Special Number Display

TOPS contains automated systems (e.g., AABS and ACCS) that can be used by subscribers to automate certain 0+ calls. When the subscriber chooses not to automate these calls, the subscriber is sent to a TOPS position so an operator can assist with the call. If one of these calls arrives at a TOPS IV position, the special number header is displayed, indicating to the operator that this call could have been automated; operator practice then determines whether or not the subscriber is informed in the use of the automated system.

TOPS Call Processing Features (Call Processing) (continued)

Prior to this CSR, calls of this type that arrived at a TOPS MP position did not have a display that informed the operator that automation was possible (but bypassed). Now, table TOPSPARM has been modified to include a new tuple that controls a TOPS MP position display for these types of calls: MP_DISPLAY_POSSIBLE_AUTOMATION. When set to N, the MP display is as before: no indication of possible automation is given. When set to Y, a question mark icon is displayed in the left-hand side of the special number field. This icon indicates to the operator that the call could have been automated, but was not.

Note: This display is transient and can be overwritten. Once an update occurs to the special number field and the icon is overwritten or erased, it does not appear again.

BK00584 - Zenith Number 10-Digit Compatibility

Zenith numbers are 5-digit numbers that the operator can dial for the subscriber. Billing for Zenith numbers is charged to the called party. To illustrate, a subscriber dials 0 and requests the operator to place a Zenith call. The subscriber gives the operator the 5-digit number, e.g., 12345. The operator keys in 80012345, and lookup in table ZENITH obtains a 10-digit number, such as 212-239-1111.

If the TOPS operator NPA (which is the SNPA of tuple operator in table OPRTRANS) matches the NPA of the Zenith number, the NPA of the Zenith number is stripped and the resulting 7-digit number is used for translations. However, offices that now use 10-digit dialing find the 7-digit Zenith numbers problematic, because their translations can not accommodate these 7-digit numbers.

To solve this, a new parameter in table TOPSPARM is created: ZENITH_TEN_DIGIT_DIALLING. If the TOPS operator NPA and the Zenith number NPA are the same, the parameter is checked prior to stripping the area code from the called number. The default value of ZENITH_TEN_DIGIT_DIALLING is N, which results in stripping the area code from the Zenith number. If the parameter is set to Y, the Zenith number remains 10 digits.

The following figure shows the new parameter set to N:

MAP display example for table TOPSPARM

```
PARMNAME                          PARMVAL
_____________________________________________________________
ZENITH_TEN_DIGIT_DIALLING          N
```

TOPS Call Processing Features (Call Processing) (continued)

It is important to note that the ZENITH_TEN_DIGIT_DIALLING parameter only applies if the Zenith NPA and the TOPS operator NPA match. The Zenith number is obtained by look up in table ZENITH, the TOPS operator NPA is the SNPA field in the operator tuple of table OPRTRANS, and the value of ZENITH_TEN_DIGIT_DIALLING is given in table TOPSPARM.

ZENITH_TEN_DIGIT_DIALLING parameter function

Zenith number	Zenith number NPA	TOPS operator NPA	ZENITH_TEN _DIGIT_DIALING	Number passed to translations
212-239-1111	212	212	N	239-1111
212-239-1111	212	212	Y	212-239-1111
212-239-1111	212	314	N	212-239-1111
212-239-1111	212	314	Y	212-239-1111

BR11562 - No off-hook is sent to the EO

Prior to this PRSDOC, an offhook was sent to the end office to request ANI after the CLD string in Bell, Modbell, and OSS signaling. Since an offhook is already sent to the end office, a true answer cannot be propagated from the terminating office back to the end office for nonoperator calls.

This PRSDOC creates wink/offhook option (field ANIREQ) in table TRKGRP for TOPS trunks with Bell, Modbell and OSS signaling. The wink option allows the ANI spill to be requested from the end office with a wink so that a true answer can be propagated to the end office for non-operator calls over TOPS trunks. An off-hook is sent to the end office for operator calls when routing to a position. The end office does not receive an answer if the terminating office fails to provide an answer with the wink option.

BK00221 - Parameter to control delay before wink request for ANI

The wink request ANI feature on TOPS trunks allows the TOPS office to request ANI from an End Office using a wink instead of an offhook. This is based on datafill in table TRKGRP for TOPS trunks. The wink request ANI capability is documented under PRSDOC BR11562 (presented prior to this PRSDOC). Please refer to this document for details on wink request ANI on TOPS trunks.

A hardcoded delay was implemented in software to allow slow End Offices to set up to look for the wink request. This delay was implemented for MF TOPS trunks equipped with MF receivers. The hardcoded delay created timing

TOPS Call Processing Features (Call Processing) (continued)

problems between the End Office and the TOPS office and resulted in ANI failures at the TOPS office.

This PRSDOC creates a datafillable parameter MF_TRUNK_WINK_REQUEST_DELAY in table TOPSPARM that allows control of the delay before the wink is sent to the End Office to request the ANI spill. This parameter only applies to MF TOPS trunks equipped with MF receivers. The value that is datafilled can range from 0 to 2 seconds. The default delay is 250 milliseconds.

This parameter also controls the delay before a wink is sent by the TOPS office for treatment supervision.

UG100659 - Incoming ONI trks show idle at MAP B

Prior to this feature when slow CAMA offices took more than 500ms to go onhook on both the talk and KP trunks in the RONI pair, it was possible to interpret the onhook on the KP trunk as indicating bad digits. In this case, a reset is sent to the CAMA office to prepare for additional digits. This sometimes caused a race condition after the reset was sent, which leaves the RONI circuits inaccessible (data circuit offhook towards the CAMA office).

This PRSDOC creates a datafillable parameter RONI_TAKE_DOWN_DELAY in table TOPSPARM that allows the operating company to indicate whether they have slow CAMA offices interfacing with the DMS switch, which require additional time between RONI trunks (same pair) going onhook. The value that is datafilled can either be N or Y. Where Y waits approximately 1.5-2.5 seconds for a successful digits indication, N defaults to the original 500ms-1.5 seconds.

Tables SPLDNID and FXDNMAP required datafill (BCS27)

The following required datafill is applicable to call types:

0+, 0-, and 1+ incoming on nondedicated TOPS trunks, where ANI is an FX number, not the true billing number

Both the FXNUM and ACTLNUM in table FXDNMAP must also be datafilled in table SPLDNID. The entry in table SPLDNID is the trigger to search table FXDNMAP. If the FXNUM is not in table SPLDNID, then table FXDNMAP is never searched. The ACTLNUM should also be datafilled in table SPLDNID for the reason given in the FXDNMAP section of the data schema section of this document.

TOPS Call Processing Features (Call Processing) (continued)

Table SPLDNID memory allocation (BCS19)

This memory allocation guideline is applicable to calls from lines with billing restrictions incoming on TOPS type trunk groups

This is a memory allocation guideline for table SPLDNID, which has a digilator as its key field. The same general principles of memory allocation described here can be applied to other tables containing digilators.

For instance, some other tables have “digilator IDs" that may consist of a trunk CLLI or a customer group name. This ID and digilator combination references data in the table. This arrangement has an impact on the memory requirements, since memory allocated for the ID itself must be added to the memory required for the digilator.

Table SPLDNID maximum size

The maximum size of table SPLDNID is a function of the actual data it contains. The table cannot exceed 32K words of memory. Since SPLDNID is a digilator, the degree of similarity among tuples has a bearing on how much data can be added. Table SPLDNID, as any digilator, a tree structure for data allocation. Similarity among the tuples determines the number of nodes (branches) and the total memory required to store the data.

For these reasons, an absolute limit on the number of tuples in TABLE SPLDNID cannot be defined.

Table SPLDNID memory allocation

The SPLDN field in table SPLDNID is a digilator that requires a 10 word block of store for each digit. These blocks of store are referred to as “digilator blocks." Therefore, a digilator block contains digits 0-9. Similar numbers share digilator blocks.

The data assigned to the directory number in Field SPLSEL and its subfields is stored against the last digit in the SPLDN field. If consecutive 10-digit numbers are entered separately but have identical data in SPLSEL, the table automatically bands the consecutive entries together and stores the data against the last distinctive digit.

The number of 16-bit words required for the table may be approximated based on the following:

Summation over A (10 (N))

where

TOPS Call Processing Features (Call Processing) (continued)

A =
the number of unique combinations of SPLDN and SPLSEL

N =

the total number of digilator digit blocks required for the SPLDN field entries for this SPLDN/SPLSEL combination.

Note: This is an approximation, since there is a certain amount of store allocated for table overhead.

MAP display example for table SPLDNID

```
Table SPLDNID
_____________________________________________________________
91923996        COIN STD ACTS N 3
9194525         RSTRCTD  4
70422290        COIN STD ACTS Y 5
70434553        RSTRCTD 6
70434554        RSTRCTD 7
```

In this example, 22 digilator blocks are required to store the data in table SPLDNID. Including the overhead, 223 words of memory are utilized.

In most switches, the NPA or NPA-NXX is common among many entries, which also allows these entries to share digilator blocks for the first 3 or 6 digits even if they have different data stored against them, resulting in efficient use of memory.

Banding of data

If table SPLDNID contains distinct 10-digit numbers that cannot be banded with other entries, then it takes 10-ten word digilator blocks to represent each number. However, if directory numbers are banded in the table (e.g., 10 entries with the same data are represented by a single 9-digit entry), data for many more directory numbers can be stored using much less memory.

Routing Deflected 0- Calls Back to TOPS Queue

To allow deflected EMERGENCY 0- calls to return to TOPS queue:

- 0- calls that have been deflected (queue thresholds exceeded) are sent to treatment EMR4. EMR4 should be sent to table OFRT to a route list including an announcement instructing the subscriber to stay on the line if

there is an emergency, followed by an element sending the call to table TOPSPOS.

- A call that has been through EMR4 treatment and directed to the TOPS queue is marked NO_DEFLECT and is placed in the queue even if the deflection threshold has been reached, provided that the number of calls in queue does not exceed the value of TOPS_CALLS_WAITING_QUEUE_SIZE in table OFCENG. Once a call is placed in queue, it remains there until it is connected to a TOPS position or the subscriber hangs up.
- TOPS calls other than 0- go to EMR3 treatment when the number of calls in queue exceeds the deflect calls threshold (field DEFLECT) specified in the active Queue Length Threshold table. These calls cannot be routed to the TOPS queue from EMR3 treatment.

When providing this capability for emergency calls to route back to the TOPS queue, ensure that TOPS_CALLS_WAITING_QUEUE_SIZE is set to a sufficiently high value so that the emergency calls is not redeflected.

Note: A call that has been placed in the queue via EMR4 treatment is placed in the bottom of the queue. There is no special priority assigned to the call.

End Office Routing of DA Calls

A number of problems have been reported in combined 100/200 TOPS offices due to incorrect directory assistance translations.

In an end office, a directory assistance call must not route directly across the network, but must leave the end office and enter the TOPS environment per equal access guidelines by using a TOPS looparound trunk. Refer to “TOPS Trunk Selection" in section “Preparing Trunk Data" for more details.

The following example TRAVER shows the correct datafill for an IBN originated call. The call must leave the IBN environment first before routing via the TOPS looparound trunk. The original translations were erroneously routed by table H.RTEREF to table TOPS. With the correction, the call now routes to a TOPS looparound trunk.

TOPS Call Processing Features (Call Processing) (continued)

MAP display example showing correct datafill for an IBN originated call

```
>traver l 3415512 '9411' b
TABLE IBNLINES
HOST 00 1 15 00 DT STN IBN 3415512 MOSTATE 0 1 314
(3WC)(RAG)
  (HLD)(CHD)$
TABLE NCOS
MOSTATE 1 1 10 MOSTAT $
TABLE CUSTHEAD: CUSTGRP, PRELIMXLA, CUSTXLA, FEATXLA,
VACTRMT,
  AND DIGCOL MOSTATE NXLA MOSTAT NXLA 1 MOSTATE
TABLE DIGCOL
MOSTATE 9 POTS Y
NCOS PRELIM XLA name is NIL. Go to nex XLA name.
CUST PRELIM XLA name is NIL. Go to nex XLA name.
TABLE IBNXLA: XLANAME MOSTAT
MOSTAT 9 NET N N 1 Y POTS N N GEN ( LATTR 52) ( EA ATX288 Y
1)$
TABLE DIGCOL
POTS specified: POTS digit collection
TABLE LINEATTR
52 IBN NONE NT COS1 52 314 EAPT LOC1 OOC N 10 NIL NILSFC
  L520STLS 0 NIL NIL 00 N
TABLE STDPRTCT
EAPT ( 1) ( 1)
 . SUBTABLE STDPRT
 . 411 411 T DD 0 OFRT 18 3 3 NONE
 .  . TABLE OFRT
 .  .   18 N D ROLL330ROLL 0 N N
 .  . EXIT TABLE OFRT
 . SUBTABLE AMAPRT
 . 411 411 DA411 N
OVERLAP CARRIER SELECTION (OCS) APPLIES
TABLE OCCINFO
ATX288 288 EAP Y Y Y Y N N N N Y Y LONG 2 FGRPD N N N N N N
++++ TRAVER: SUCCESSFUL CALL TRACE +++

DIGIT TRANSLATION ROUTES
1 ROLL330ROLL               411              ST2P
TREATMENT RUTES. TREATMENT IS: GNCT
1 T120
2 LKOUT
+++ TRAVER: SUCCESSFUL CALL TRACE +++
```

TOPS Call Processing Features (Call Processing) (continued)

Increasing the number of TOPS positions and OC voice links

To increase the maximum number of TOPS positions and/or OC voice links, add Digital Modems, and/or expand the operator login ID range in an inservice switch, data must be deleted from tables and re-added, which requires taking the TOPS operators out of service.

Background

Many offices are adding TOPS MP and MPX positions or OC voice links for Directory Assistance (DA) service in upcoming extensions. DA with TOPS MP positions was available with BCS29, and DA with MPX was introduced in BCS30.

The CI (SSE Report from NTACCESS or Section 3 of the NT8620) indicates the number and type of operator positions being added on an extension, along with a list of all associated OSCs.

It is essential that the maximum number of TOPS positions or voice links, digital modems, and operator login IDs* be evaluated for the engineering interval and increased if necessary as part of the BCS upgrade process. Operators must be taken out of service to change these values anytime other than on a BCS upgrade. As with all extensions, office parameters must be evaluated in light of the software and hardware being added, to ensure that sufficient software resources are available to the switch, as described in CEP 293: DMS-100F Extension Software Load Engineering Procedure. The number of positions and operator login IDs are being highlighted here only because of their potential to cause TOPS operators to be taken out of service if not increased at the appropriate time.

Resolution

To increase the number of TOPS positions (TOPS MP, MPX, or TOPS IV):

- In the live BCS N switch, increase the value of field TRKGRSIZ of both pseudo-CLLIs (TOPSPOS and TOPSPOSDATA) in table CLLI (they must be the same size) to the new value. There is no effect on the live switch. These values are only referred to when the first tuple is added to table TOPSPOS, to allocate the proper amount of datastore.
- Then when the BCS upgrade from the BCS N switch to the BCS N' switch is performed, the increased CLLI sizes is present when the first tuple is added to table TOPSPOS in the BCS N' switch, and an increased amount of data store is allocated so that the larger number of positions may be filled.
- A TOPS host may serve several Operator Services Centers (OSCs) that have been engineered under separate COEO numbers. The positions at

TOPS Call Processing Features (Call Processing) (continued)

these OSC must be included in the total number datafilled in the host switch.

To increase the number of TOPS OC voice link trunks:

Change the TRKGRSIZ of the voice link trunk group CLLI same as above. An increased amount of data store is allocated for table VLMEM so that the larger number of voice link trunks may be datafilled.

To expand the range of operator login IDs:

- Most offices that are adding TOPS positions also requires an increase of office parameter TOPS_MAX_OPERATOR_NUM in table OFCENG. Increase the value of parameter TOPS_MAX_OPERATOR_NUM in table OFCENG via PARMMAIL. Refer to BCS31 Office Parameter Questionnaire, #107, or NT Access Office Parameter Calculator Report.
- In BCS32, the maximum value of this parameter is increased to 9997, but it cannot be set higher than its previous maximum of 3099 unless all switches in the OC network are at BCS32 or higher.
- In BCS32, TOPS_MAX_OPERATOR_NUM is changed to immediate activation. For upgrades to BCS32 and higher, this parameter no longer requires attention on a BCS upgrade.

To increase the number of Digital Modems:

- Increase field TRKGRSIZ for the DMODEM CLLI in the live switch prior to the BCS upgrade. The new value is made effective during the BCS upgrade process and operator service goes uninterrupted.
- Change the TRKGRSIZ of the DMODEM CLLI to at least 4 times the required new size of the DMODEM table. An increased amount of data store is allocated for table DMODEM so that the larger number of digital modems may be datafilled.
- Additional DMODEMs are not required when the new TOPS positions are on a TOPS Message Switch (TMS).

All TOPS office parameters should be reevaluated when TOPS positions are being added to a switch. Reference CEP 293: DMS-100F Extension Software Load Engineering Procedure.

Other TOPS Office Parameters

The following office parameters (table OFCENG) are directly related to the number of TOPS positions and/or login IDs and are also difficult to change

outside the BCS upgrade process. They should be increased via PARMMAIL if required:

- TOPS_ASST_POS
- TOPS_NUM_TRAFFIC_OFFICES

A TOPS office cannot be changed from a single-team to a multi-team configuration during an ONP upgrade. Reference the Office Parameter Calculation Guide and COCOS FILE #0407.

All TOPS parameters should be reevaluated when TOPS positions or OC voice links are being added to an inservice switch. The list above is not an exhaustive list. Reference: Office Parameter Calculation Guide.

BK02742 - DA Block forward number optionality

Parameter DA_BLOCK_FWD_NUMBER has been added to table VROPT. If set to Y, a DA number does not forward when an operator keys a forward number on during a DA call.

BK04369 - Table MPCLINK field LINKNABL description (BCS35)

Field LINKNABL in table MPCLINK is used differently than described in the data schema section of this document. This description changes.

Field LINKNABL is the time in minutes for the specified link in the tuple to become fully ENABLED. After this time, if the link is not fully ENABLED, the MPC card is System Busied and RTS'd. This is to reinitialize mechanisms on the MPC card in an all out attempt to ENABLE the link (e.g. if the link is especially critical). If this function is not desired, the LINKNABL field may be datafilled as 0 (disable this function).

If field LINKNABL is datafilled with a non-zero value, one link is ENABLED, and the second link has reached the LINKNABL timeout threshold (i.e., second link has been System Busied), the ENABLED link and the MPC card are System Busied and RTS'd. To prevent the MPC card and ENABLED link from being System Busied and RTS'd in this situation, LINKNABL can be datafilled with 0 for the System Busy link (i.e., disables the function).

BK02732 - DA call not released when CLG goes on-hook

This feature allows automatic release of DA calls from TOPS positions when the calling party goes on-hook. This is implemented by adding parameter DA_AUTO_POS_RLS to table VROPT. If set to Y, DA calls are automatically released from TOPS General positions when the calling party goes on-hook.

TOPS Call Processing Features (Call Processing) (continued)

Affected calls

For this activity, DA calls are considered to be those calls that are assigned a DASERV or INTCSERV service type, but not those calls that are given a call origination type of CO_INTC from table TOPS. This is because INTCSERV may be used for true DA calls. The CO_INTC call origination type is used for true Intercept calls (regardless of the service type) and this activity does not apply to true Intercept calls.

DA calls also include those calls receiving a Queue Management System (QMS) service, which has a base service type of DASERV or INTCSERV (as datafilled in table TQMSSERV for offices with QMS - see feature AF2875 QMS Call Queue Assignment), again excluding calls with a call origination type of CO_INTC from table TOPS.

This activity does not apply to DA calls that route to a TOPS-MP position when IBM DA Protocol is in use. This activity does apply to DA calls that route to any other position type when IBM DA Protocol is in use (MPX-AOSS or MPX-OPP), and it also applies to DA calls that route to any position type when Standard DA Protocol (CCI) is in use.

New parameter

Parameter DA_AUTO_POS_RLS has been added to table VROPT. This parameter causes DA calls to automatically release from TOPS positions upon receipt of an on-hook indication from the calling party as if the operator had keyed POS RLS.

Setting this parameter to Y causes automatic release as described above. Since this causes some calls to be released sooner, it reduces the Average Work Time.

Warning: A call may leave the TOPS position without any opeerator action.

When this parameter is set to N, the default, the off-hook indiction is processed normally, where the position is notified of the change in hook status.

This parameter applies only to General (GEN) operator positions. If the General operator is attached to a Service Assistant or In-Charge (SA/IC) operator, or has released the call to an SA/IC, none of the involved positions are released if the calling party goes on-hook, even if the parameter is set to Y.

DA calls include those calls receiving a Queue Management System (QMS) service that has a base service type of DASERV (as datafilled in table TQMSSERV for offices with QMS - see QMS Host/Remote Queueing, OSB00101).

The DA_AUTO_POS_RLS parameter has no effect on calls coming in to the TOPS office over BTUP trunks. These calls remain at the TOPS position when the calling party goes on-hook, regardless of the setting of the parameter.

When the parameter is set to Y and the position release function is automatically attempted due to calling party on-hook, the call may not release if required billing information is not present. See Interactions section for more information.

When handling ADAS calls, it is recommended that DA_AUTO_POS_RLS be set to N to prevent potential operator confusion. Refer to functionality Automated DA Service, OSDA0004, in the operation section under "Overview of tables", table VROPT for further details.

CV14269 - TOPS POS display discrepancy

The “split clg" and “gen ama" screen displays are now available in other languages besides English. This capability is implemented by 3 new parameters in table TOPSPARM for TOPS 04 positions.

BR19395 - Implement SA Queuing

This PRS creates table SAQSIZE, which associates a maximum queue depth with each team. This table is datafilled after Office Parameter TOPS_NUM_TRAFFIC_OFFICES.

UN100159 - SA/IC Queuing Enhancements

This PRSDOC enhances the Service Assistant/In-Charge (SA/IC) Queuing by allowing the operating company to service SA/IC requests according to the age of the request. Also, the number of SA/IC positions defined in any single team is increased from 6 to 126.

Background (UN100159)

In BCS31, SA/IC queuing was enhanced to allow up to 16 general operator requests for assistance to be queued per team. This enhancement was documented in PRSDOC BR19395: “Enhanced SA/IC Queuing." Please refer to this document for general information concerning enhanced SA/IC queuing.

When cross team routing is in effect (OFCENG office parameter TOPS_CROSS_TEAM_ROUTING set to Y), any SA/IC position can receive general SA/IC requests from operators in any team. The following algorithm finds an available SA/IC:

- First, the DMS switch attempts to connect the request to the SA in the requesting operator's team who has been available for the longest time. The switch only connects SA/ICs who are capable of providing assistance

TOPS Call Processing Features (Call Processing) (continued)

for the service type of the call. e.g., a Toll and Assist (TA) SA/IC is not connected to a DA call.

- If no SAs are available, the DMS switch attempts to connect the request to the team's IC position.
- If no SA/ICs are available in the operator's team, and the TOPS_CROSS_TEAM_ROUTING parameter is set to Y, the DMS switch moves to the next team and repeats the team search algorithm above. The DMS switch searches through each team in ascending order, and "wraps around" from the last team to the first team. For example, if there are five teams and an assistance request is made in team 3, the switch searches team 3, followed by team 4, team 5, team 1, and finally team 2. If the DMS switch does not find an available SA/IC, then the general assistance request is queued.

Some operating companies do not staff SA/IC positions in every team. During busy hours, the following scenario can arise in a team with no SA/ICs:

- The general operator places an SA/IC request.
- All SA/ICs in other teams are handling calls, so the general operator's request is queued in the general operator's team.
- The general operator releases the call to the queue by keying Position Release. The general operator is dropped out of the call and the subscriber hears ringing while waiting for an available SA/IC.
- The subscriber waits an excessive amount of time (>30 rings) before an SA/IC is connected to the call.

A new TOPS parameter

This PRSDOC provides new TOPS parameter, SA_QUEUEING_BY_REQUEST_AGE in table TOPSPARM. This parameter selects queuing by request age. If the operating company is using queuing by request age, then when an SA/IC becomes available, the DMS switch searches the request queue for each team in the switch. The oldest SA/IC request is connected to the newly available SA/IC.

Interactions with Cross Team Routing

Queuing by request age has only a noticeable affect when cross team routing is in effect. If cross team routing is not in effect, no scanning is done for requests in other teams. The first queued request from the newly available SA/IC's team is connected, and since the queue is first in-first out, this request is guaranteed to be the oldest request in the SA/IC's team.

TOPS Call Processing Features (Call Processing) (continued)

Interactions with Service Type

The service type distinction continues to be observed. No requests are attached to SA/IC positions that cannot handle the request. For example, an SA/IC request from a directory assistance (DA) general operator is not connected to a toll and assist only (TA only) SA/IC. This means that the oldest request in the office may be passed over temporarily if it is of inappropriate service type for the newly available SA/IC. When the next SA/IC with a compatible service type becomes available, the oldest request is serviced.

Search for Oldest Request

The DMS switch searches each team's request queue. The oldest request in the entire switch is connected to newly available SA/IC (as long as service types are compatible).

Expansion to Maximum SA/ICs Per Team

This PRSDOC also expands the maximum number of SA/ICs that may be datafilled per team. The former limit was 6 SA/ICs per team. The new limit is 126 SA/ICs per team.

The maximum number of SA/ICs that can be datafilled in table TOPSPOS (independent of team number) remains 126. Therefore, if a team is datafilled with 126 SA/ICs, no other SA/ICs may be datafilled in any other teams.

BR31793 - Distinct number of call arrival tones on DA/TA/INTCP calls

This feature identifies calls to operators by providing call arrival tones as follows:

- one tone on TA calls
- two tones on INTC and ONI/CAMA calls
- three tones on DA calls.

Prior to this feature, there was one call arrival tone for TA and DA calls, and two for INTC and ONI/CAMA calls. This capability is enabled by new parameter DISTINCT_NUM_CALL_ARRIVAL_TONES in table TOPSPARM. The range is Y (enable) and N (disable). If disabled, the number of tones remains the same as before this feature. See the Interactions section for additional information.

BK04203 - Disable KP FWD/BK for DA only positions (BCS35)

New parameter DA_DELAY_BLOCK_FWD_BK in table VROPT allows the KP Forward, KP Back, and SPL Verify operator keying functions to be disabled on delay calls for operators on MP positions that are of DA service only (DASERV/INTCSERV are the only services in the operator's service set - table OPRDAT).

TOPS Call Processing Features (Call Processing) (continued)

This functionality prevents operators from outdialing calls, except when the OGT keys are set up to outpulse to a specified number (OGT keying function has not been changed). When this function is turned on, DA only operators cannot outpulse and check third-number billing by spinning up delay calls. However, if the Special Verify feature is present, it may be used to verify third number billing.

The Special Verify feature allows the operator to outpulse to a third number, to verify third number billing, without bringing up a delay call. For more information on Special Verify, please refer to design document AF1121 (TOPS AWT Enhancements): Special Verify AWT Enhancements.

If the DA_DELAY_BLOCK_FWD_BK parameter is set to Y when a DA only operator brings up a delay call, then the KP Forward and KP Back keying function are disabled. In other words, if the DA only operator has a delay call and enters the forward or back number followed by the START key, nothing happens if the parameter is set to Y (e.g., the number won't be formatted, queried, or outpulsed). If the parameter is set to N, normal functionality holds. This parameter works on an office wide basis.

BK04688 - Allow multiple routing for multi-NPAs/trunk group (BCS35)

This feature provides consistent routing of operator-assisted calls from TOPS positions that serve multiple NPAs. Prior to this activity, NO AMA operator handled calls and inwards calls are routed using the operator's translations data. With the introduction of this activity, translations is optionally performed using the calling party's trunk group information instead of the operator's data.

To implement this option, two new boolean parameters are constructed: MULTI_NPA_INWARD_XLA and MULTI_NPA_NO_AMA_XLA, in table TOPSPARM. A value of Y for MULTI_NPA_INWARD_XLA causes inwards calls to route using the calling party's trunk group data. Similarly, a value of Y for MULTI_NPA_NO_AMA_XLA causes NO AMA calls to route using the calling party's trunk group data. Otherwise, translations are performed as before, using the operator's translations data for routing. The default value for these parameters is N.

Background - Translations

For a call to route to its ultimate destination, it must first traverse translations. Following is a brief description of the processes involved in the translation system.

TOPS Call Processing Features (Call Processing) (continued)

Pretranslation (background)

The first stage in the translation process is pretranslation. Its principal task is, as the name implies, to set up the translation environment for proper routing. This translation preparation is accomplished via several means. They are:

- Determine if prefix digits are present in the digit stream and ascertain the significance of those digits. Within this process, the number of prefix digits (the prefix fence) can be noted, as well as the translation system currently in effect (national or international), and the call type (direct-dialed, operator-assisted, no prefix, or nil) of the call represented in the digit stream.
- Handle a special case evoked by the particular digits in the digit stream. This entails routing from the pretranslator - thereby precluding any screening - with a CLLI, a route reference, or a Serving Numbering Plan Area (SNPA) and NXX applicable to directory number (DN) translation.
- Handle a variable number of incoming digits, possibly replacing the entire digit stream. (For example, replace a 3-digit service code with a 7-digit number).
- Set a treatment if the digits are invalid.

The instrument used for these ends is the STDPRTCT table. This table specifies up to 256 pretranslator names and the appropriate subtables that dictate routes, translations, and others. The applicable subtable is STDPRT, which is indexed by comparing the digilator contents to datafilled ranges of values to obtain the routes/translations.

Code translation (background)

If the pretranslation is passed, or if no pretranslation was performed, the second subfunction, code translation, is primed to assume control. The code refers to either an SNPA for national translations, or a foreign country code for international translations. Code translation:

- Deduces the number of digits to expect in the called number (e.g., seven digits are expected for a local call)
- Derives a destination route for the call (or sets a treatment).

Screening (background)

After code translation, the third step in translations is encountered - screening. The two main screening types are local call area (LCA) screening and class of service screening.

LCA screening sets a call's charge status; i.e., whether the call is chargeable or not. This type of screening utilizes the LCASCRN table. The index to this table is an SNPA and the LCA name. To determine whether the call is local,

TOPS Call Processing Features (Call Processing) (continued)

the LCASCR subtable is accessed. This subtable lists ranges of NXX values. If the called number's NXX falls within one of these ranges, then it is local; otherwise the call is billed by default.

In contrast to LCA screening, class of service screening can defy translation routes previously set, instead using a route, treatment, or position specified by the screening mechanism itself. The CLSVSCRC table is used for this task. Tuples for this table are chosen by a multipart key composed of an STS, a screening class name, and call type. The subtable that aids in the rerouting task, if necessary, is CLSVSCR. The tuples are referenced by digit ranges and indicate the translation result that is required.

Directory number translation (background)

Finally, the last stage is encountered - directory number translation. Its function is to convert the given DN into a line ID corresponding to the called number. However, as TOPS does not connect directly to lines, this activity does not encompass DN translations.

Generic translations hierarchy (background)

TOPS Call Processing Features (Call Processing) (continued)

Translations flow

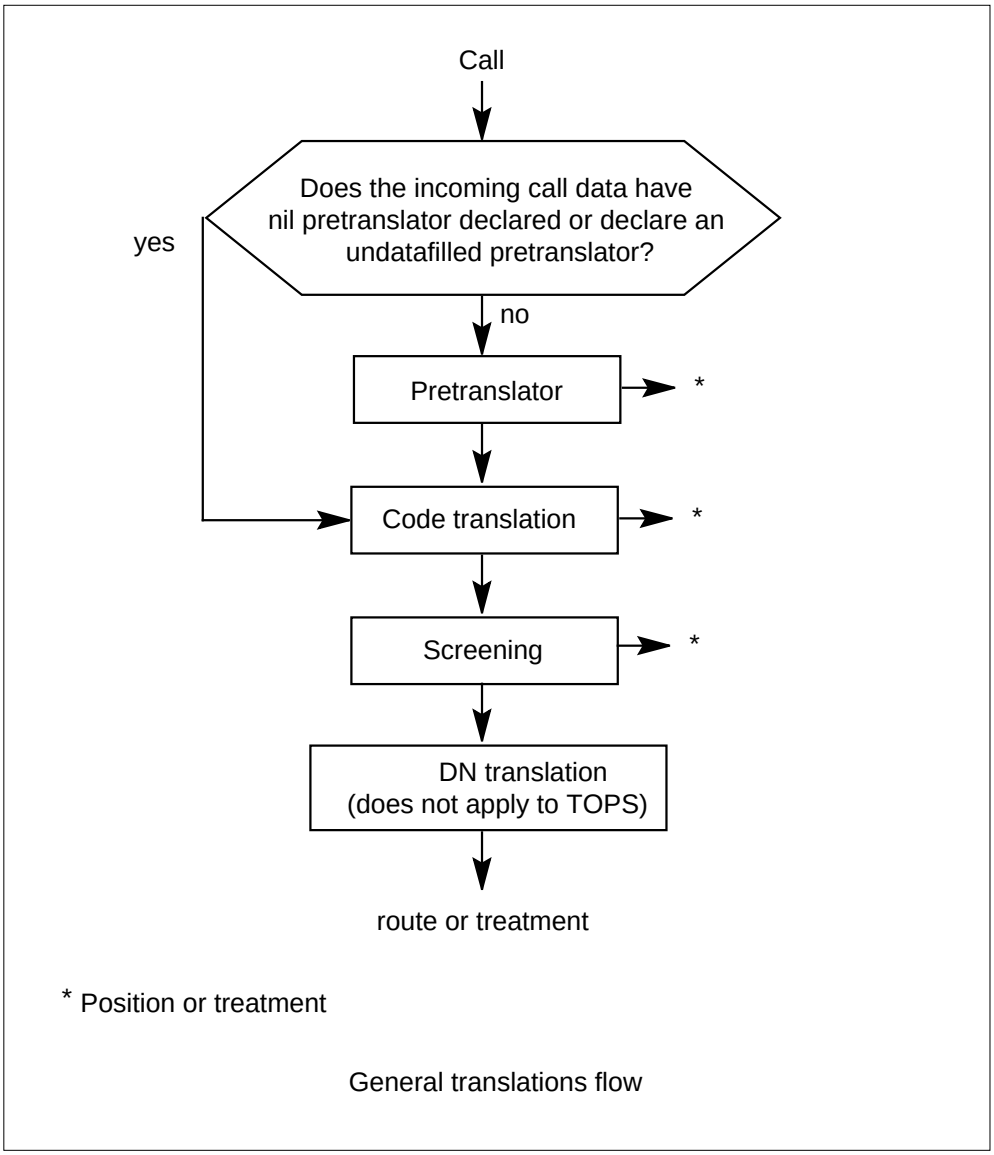

General translations flow

Previous TOPS translations (background)

NO AMA Calls (background)

A 0- call arrives at a TOPS position from trunk group TBELLIC1. The number that the calling party wants to reach, 653-1234, is given to the operator. The caller's DN is 222-1234. The operator sets the charge class as NO AMA and enters the called number. The translation process begins.

TOPS Call Processing Features (Call Processing) (continued)

The pretranslator name is taken from the OPRTRANS table (shown below), OPERATOR tuple. This is compared to the STDPRTCT datafill to determine the action needed. In this case, no action is needed as the pretranslator is nil (NPRT).

Sample operator data (before feature for no AMA calls) - table OPRTRANS

KEY	SNPA	SCRNCL	PRTNM	LCANAME
OPERATOR	817	NSCR	NPRT	NLCA

The SNPA (817) is now retrieved from OPRTRANS and passed on to HNPACONT for code translation. The HNPACODE subtable contains a reference that corresponds to a tuple in subtable RTEREF. RTEREF routes the call to trunk TBELL2W2.

Sample code translations data (before feature for no AMA calls) - table HNPACONT

STS	NORTREFS	NOAMBIGC	RTREF	HNPACODE	ATTRIB	RTEMAP
817	809	8	(27)	(1)	(0)	(0)

Sample code translations data (before feature for no AMA calls) - subtable HNPACODE

FROMDIGS	TODIGS	CDRRTMT
653	653	FRTE 235

Sample code translations data (before feature for no AMA calls) - subtable RTEREF

RTE			
235	S	D	TBELL2W2

LCA and Equal Access screening are not required because the call has been marked as nonbillable. Since the class of service screening index in table OPRTRANS is nil, NSCR, no class of service screening is required. Therefore, no screening is performed.

TOPS Call Processing Features (Call Processing) (continued)

Translations flow (before feature for no AMA calls)

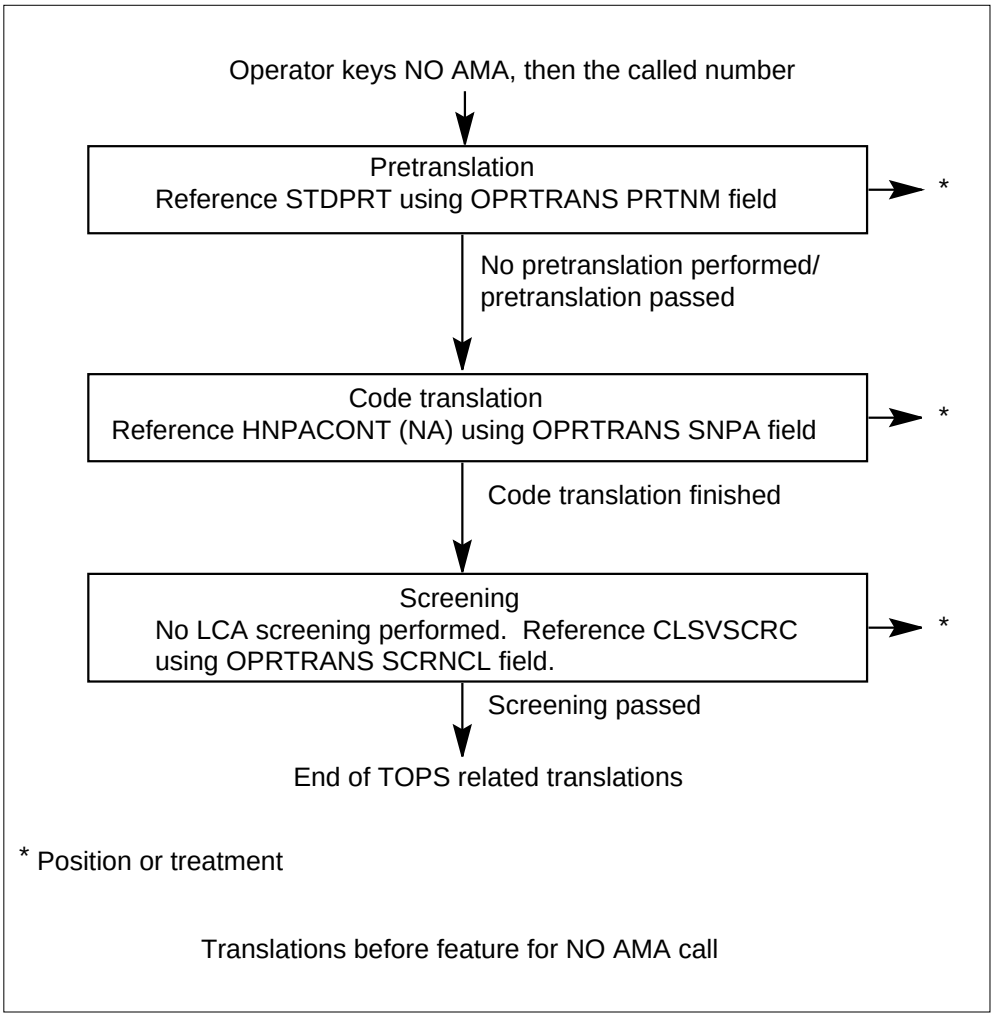

Inwards calls (background)

A 0- call arrives at a TOPS toll and assist position from trunk group TBELLIC1. The calling party requests directory assistance. The operator keys in the inwards code for directory assistance, 131, and presses start. The translation process begins. The pretranslator name is taken from the OPRTRANS table, OPERATOR tuple. This is compared to the STDPRTCT datafill to determine the action needed. The pretranslator is nil, NPRT, so no action is taken.

TOPS Call Processing Features (Call Processing) (continued)

Sample operator data (before feature for inward calls) - table OPRTRANS

```
      KEY    SNPA   SCRNCL   PRTNM   LCANAME
_____________________________________________________
OPERATOR     817     NSCR    NPRT      NLCA
```

The SNPA (817) is retrieved from OPRTRANS and passed on to HNPACONT for code translation. The HNPACODE subtable contains a reference that corresponds to a tuple in subtable RTEREF. RTEREF routes the call to trunk TBELL2W2.

Sample code translations data (before feature for inward calls) - table HNPACONT

```
STS   NORTREFS   NOAMBIGC   RTREF   HNPACODE   ATTRIB   RTEMAP
_____________________________________________________________
817        809          8 (  27)   (    1) (    0) (    0)
```

Sample code translations data (before feature for inward calls) - subtable HNPACODE

```
FROMDIGS                    TODIGS          CDRRTMT
_____________________________________________________
   131                       131          OPC3  265
```

Sample code translations data (before feature for inward calls) - subtable RTEREF

```
RTE
_____________________________________________________
265                          S    D    TBELL2W2
```

LCA and Equal Access screening are not required because the call is an inwards call. Since the class of service screening index in table OPRTRANS is nil, NSCR, no class of service screening is required. Therefore, no screening is performed. The call routes to trunk TBELL2W2, as specified in code translation.

TOPS Call Processing Features (Call Processing) (continued)

Translations flow (before feature for inward calls)

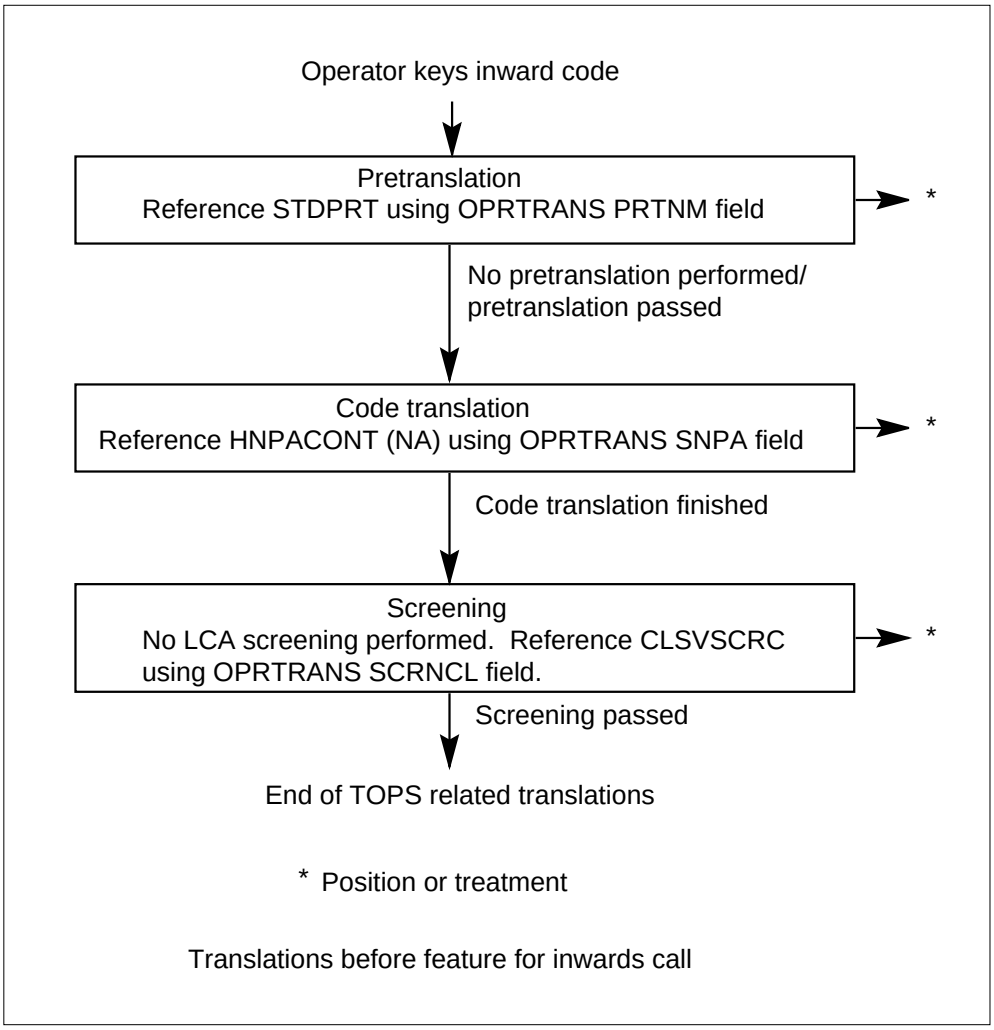

Billable calls (background)

A 0- call arrives at a TOPS position from trunk group TBELLIC1. The caller's DN is 222-1234. The caller gives the called number, 653-1234 to the operator. The operator keys in the forward number, and translation begins. The pretranslator name is taken from the OPRTRANS table, OPERATOR tuple. This is compared to the STDPRTCT datafill to determine the action needed. In this case, the pretranslator is nil, NPRT, so no action is taken.

TOPS Call Processing Features (Call Processing) (continued)

Sample operator data (before feature for billable calls) - table OPRTRANS

```
      KEY    SNPA  SCRNCL  PRTNM  LCANAME
_____________________________________________________
OPERATOR     817     NSCR   NPRT      NLCA
```

The SNPA is now retrieved from table TRKGRP and passed to HNPACONT for code translation. (Note that this is the difference between billable and NO AMA and inwards calls - for a NO AMA call or an inwards call, the SNPA is retrieved from table OPRTRANS.) The HNPACODE subtable contains a reference that corresponds to a tuple in table RTEREF. RTEREF routes the call to TBELL2W1.

Sample trunk group data (before feature for billable calls) - table TRKGRP

```
  GRPKEY
         GRPTYP  TRAFSNO  PADGRP  NCCLS          GRPINFO
_____________________________________________________
TBELLIC1
           TOPS      0     TLD   NCRT 2W MIDL 214 NPRT
       NLCA NSCR .....                          --- ----
       ---- ----                             SNPA/  \PRTNM
 LCANAME/     \SCRNCL
```

Sample code translations data (before feature for billable calls) - table HNPACONT

```
STS  NORTREFS  NOAMBIGC  RTREF  HNPACODE  ATTRIB  RTEMAP
_____________________________________________________
214     807         6 (  31)   (    1) (    0) (    0)
```

Sample code translations data (before feature for billable calls) - subtable HNPACODE

```
FROMDIGS                  TODIGS         CDRRTMT
_____________________________________________________
   653                     653         FRTE  220
```

TOPS Call Processing Features (Call Processing) (continued)

Sample code translations data (before feature for billable calls) - subtable RTEREF

```
RTE
_____________________________________________________________
220                          S    D    TBELL2W1
```

Since the LCANAME is nil (NLCA) in table TOPSBC and table TRKGRP, no LCA screening is performed. However, if an LCA screening index were present in both TRKGRP and TOPSBC, the call is marked billable based on the data from table TOPSBC. (This is due to the TRKGRP->TOPSBC hierarchy. A valid LCA screening class index in TOPSBC takes precedence over a valid index in TRKGRP.)

Next, class of service screening is performed. The service class index is retrieved from tables TRKGRP, TOPSBC, and OPRTRANS, in that order. If a service class index is specified in table TRKGRP and table TOPSBC, the call is screened using the index taken from TOPSBC. Similarly, if a service class index is specified in both TOPSBC and OPRTRANS, the call is screened using the index from OPRTRANS. In this case, however, all service class indices are nil, so no class of service screening is necessary.

Sample NPA-NXX data (before feature for billable calls) - subtable TOPSBC

```
CLLI        BILLCODE LCANAME SCRNCL ACTUALBC CHGCLASS
_____________________________________________________________
TBELLIC1         222    NLCA   NSCR   817260     TOPS
```

Finally, if the call could be an inter-LATA call, Equal Access translations are performed.

TOPS Call Processing Features (Call Processing) (continued)

Translations flow (before feature for billable call)

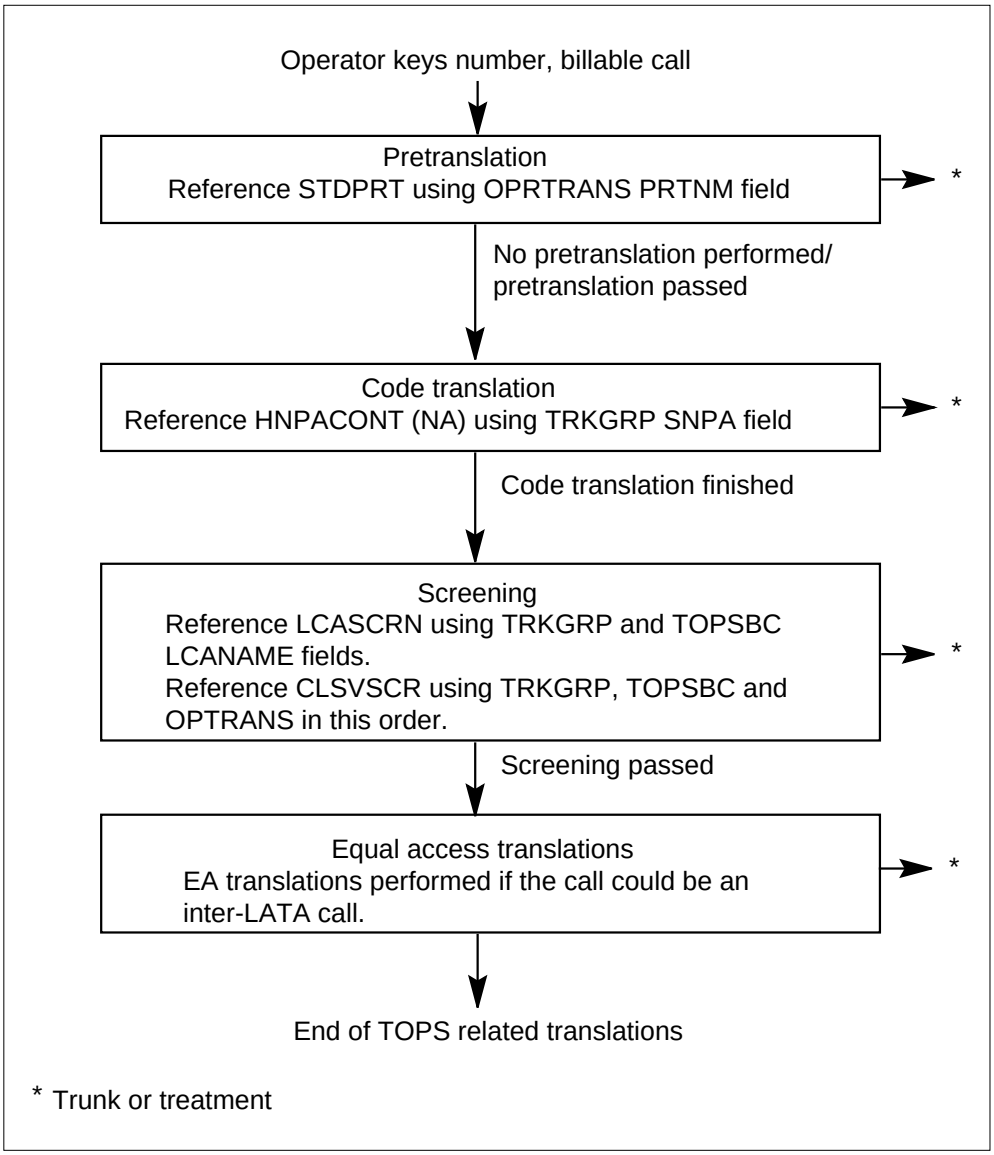

Current translations

To implement this option, two new boolean parameters are constructed: MULTI_NPA_INWARD_XLA and MULTI_NPA_NO_AMA_XLA, in table TOPSPARM. A value of Y for MULTI_NPA_INWARD_XLA causes inwards calls to route using the calling party's trunk group data. Similarly, a value of Y for MULTI_NPA_NO_AMA_XLA causes NO AMA calls to route using the calling party's trunk group data. Otherwise, translations are performed as before, using the operator's translations data for routing. The default value for these parameters is N.

TOPS Call Processing Features (Call Processing) (continued)

This feature makes the translation of inwards and NO AMA calls consistent with the translation of billable calls, if the appropriate parameter is set to yes. To demonstrate these changes, five examples are examined.

Case 1: HNPA code translations

A 0- call arrives at a TOPS position from trunk group TBELLIC1. The caller gives the number that they want to reach, 653-1234, to the operator. The caller's DN is 222-1234. MULTI_NPA_NO_AMA_XLA in table TOPSPARM is set to Y. The operator sets the charge class to NO AMA, and enters the called number. The translation process begins.

The pretranslator name is taken from the OPRTRANS table, OPERATOR tuple. No pretranslation is undertaken, as the name is nil.

Sample operator data (case 1) - table OPRTRANS

```
   KEY       SNPA   SCRNCL   PRTNM   LCANAME
_____________________________________________________
OPERATOR     817     NSCR    NPRT      NLCA
```

The NPA (214) is retrieved from TRKGRP to index HNPACONT. The HNPACODE subtable for tuple 214 contains a route reference of 225. RTEREF tuple 225 indicates that the call should route to trunk TBELL2W2. (Note that the NPA is now taken from TRKGRP. Prior to this activity, if this activity is not present, or if the MULTI_NPA_NO_AMA_XLA parameter is set to N, the NPA is taken from OPRTRANS[OPERATOR].)

Sample trunk group data (case 1) - table TRKGRP

```
  GRPKEY
         GRPTYP   TRAFSNO   PADGRP   NCCLS           GRPINFO
_____________________________________________________________
TBELLIC1
           TOPS         0   TLD    NCRT 2W MIDL 214 PTOP
       NLCA NSCR .....                          --- ----
       ---- ----                             SNPA/    \PRTNM
 LCANAME/     \SCRNCL
```

TOPS Call Processing Features (Call Processing) (continued)

Sample code translations data (case 1) - table HNPACONT

```
STS   NORTREFS   NOAMBIGC   RTREF   HNPACODE   ATTRIB   RTEMAP
_____________________________________________________________
214      807          6 (  31)    (     1) (     0) (     0)
```

Sample code translations data (case 1) - subtable HNPACODE

```
FROMDIGS                    TODIGS          CDRRTMT
_____________________________________________________
   653                       653          FRTE  225
```

Sample code translations data (case 1) - subtable RTEREF

```
RTE
_____________________________________________________
225                          S    D    TBELL2W2
```

No LCA screening is performed, because the call is already known to be nonbillable. For class of service screening, the service class indices are retrieved from TRKGRP, TOPSBC, and OPRTRANS, in that order. These screening classes, with the NPA and call type, are used to reference a tuple in the CLSVSCRC table. If a route is datafilled for this index, there is a tuple in the CLSVSCR subtable for it. This dictates the new route that should be utilized. In this case, however, all three of the indices are nil (NSCR), so no screening is performed. No Equal Access translations are necessary, as the call is not billable.

Sample NPA-NXX data (case 1) - table TOPSBC

```
CLLI         BILLCODE LCANAME SCRNCL ACTUALBC CHGCLASS
_____________________________________________________
TBELLIC1         222    L32X   NSCR   817260     TOPS
```

Therefore, the translation result is a route to trunk group TBELL2W2, as set in RTEREF.

Case 2: Class of service screening, called number not in range

A 0- call arrives at a TOPS position from trunk group TBELLIC1. The caller gives the number that they want to reach, 653-1234, to the operator. The caller's DN is 322-1234. MULTI_NPA_NO_AMA_XLA in table

TOPS Call Processing Features (Call Processing) (continued)

TOPSPARM is set to Y. The operator sets the charge class to NO AMA and enters the called number. The translation process begins.

As in case 1, no pretranslation is necessary, as OPRTRANS[OPERATOR].PRTNM is nil.

Sample operator data (case 2) - table OPRTRANS

```
  KEY       SNPA  SCRNCL  PRTNM  LCANAME
_____________________________________________________________
OPERATOR     817    NSCR   NPRT     NLCA
```

The NPA is again taken from TRKGRP for code translation.

Sample trunk group data (case 2) - table TRKGRP

```
  GRPKEY
         GRPTYP  TRAFSNO  PADGRP  NCCLS          GRPINFO
_____________________________________________________________
TBELLIC1
            TOPS       0   TLD   NCRT 2W MIDL 214 PTOP
       NLCA NSCR .....                          --- ----
       ---- ----                          SNPA/    \PRTNM
 LCANAME/     \SCRNCL
```

The route reference in HNPACONT[214].HNPACODE for the called digits is 225, which corresponds to a path to trunk TBELL2W2.

Sample code translations data (case 2) - table HNPACONT

```
STS  NORTREFS  NOAMBIGC  RTREF  HNPACODE  ATTRIB  RTEMAP
_____________________________________________________________
214     807         6 (  31)   (    1) (    0) (    0)
```

Sample code translations data (case 2) - subtable HNPACODE

```
FROMDIGS                    TODIGS         CDRRTMT
_____________________________________________________________
   653                       653         FRTE  225
```

TOPS Call Processing Features (Call Processing) (continued)

Sample code translations data (case 2) - subtable RTEREF

```
RTE
_____________________________________________________________
225                          S    D    TBELL2W2
```

No LCA screening is performed, because No LCA screening is undertaken. However, class of service screening may be performed. Although both the OPRTRANS and TRKGRP tuples hold nil screening classes, the TOPSBC tuple for the incoming trunk contains class SCR2.

Sample NPA-NXX data (case 2) - table TOPSBC

```
CLLI        BILLCODE LCANAME SCRNCL ACTUALBC CHGCLASS
_____________________________________________________________
TBELLIC1         322    L32X   SCR2   512322     TOPS
```

The tuple corresponding to the NPA (214), screening class (SCR2), and call type (OA - operator assisted) is referenced in table CLSVSCRC. Now the CLSVSCR subtable is referenced. The called digits, 653-1234, do not fall within any of the specified digit ranges in the CLSVSCR subtable, so no route can be set.

Sample class of service screening data (case 2) - table CLSVSCRC

```
   NPASCTYP   NORSLTS         TMTOFRT   CLSVSCR
_____________________________________________________________
214 SCR2 OA         2       N     NONE  (     1)
```

Sample class of service screening data (case 2) - subtable CLSVSCR

```
FROMDIGS                    TODIGS       TMTOFRT
_____________________________________________________________
 321                         642      T OFRT  25
 820                         9        T OFRT 113
```

Once again, class of service screening is not utilized, and translation results in a route set by code translation to trunk TBELL2W2.

Case 3: Class of service screening, called number in range

A 0- call arrives at a TOPS position from trunk group TBELLIC1. The caller gives the number that they want to reach, 653-1234, to the operator. The

caller's DN is 422-1234. MULTI_NPA_NO_AMA_XLA in table TOPSPARM is set to Y. The operator marks the call as NO AMA, and enters the called digits. The translation process begins.

The pretranslator name is taken from the OPRTRANS table. There is no pretranslation as the name is again nil.

Sample operator data (case 3) - table OPRTRANS

```
   KEY       SNPA   SCRNCL   PRTNM   LCANAME
_____________________________________________________
OPERATOR     817     NSCR    NPRT      NLCA
```

The NPA is taken from table TRKGRP. As in case 1, indexing HNPACONT leads to table RTEREF, tuple 225, which points to trunk TBELL2W2.

Sample trunk group data (case 3) - table TRKGRP

```
  GRPKEY
         GRPTYP   TRAFSNO   PADGRP   NCCLS          GRPINFO
_____________________________________________________________
TBELLIC1
           TOPS       0      TLD    NCRT 2W MIDL 214 PTOP
       NLCA NSCR .....                          --- ----
       ---- ----                             SNPA/    \PRTNM
 LCANAME/     \SCRNCL
```

Sample code translations data (case 3) - table HNPACONT

```
STS  NORTREFS  NOAMBIGC  RTREF  HNPACODE  ATTRIB  RTEMAP
_____________________________________________________
214     807         6 (  31)   (    1) (    0) (    0)
```

Sample code translations data (case 3) - subtable HNPACODE

```
FROMDIGS                  TODIGS         CDRRTMT
_____________________________________________________
   653                     653         FRTE  225
```

TOPS Call Processing Features (Call Processing) (continued)

Sample code translations data (case 3) - subtable RTEREF

```
RTE
_____________________________________________________________
225                          S    D    TBELL2W2
```

No LCA screening is performed, because No LCA screening is undertaken. Now, class of service screening is performed. The TRKGRP and OPRTRANS screening classes are nil - no screening performed in these cases. However, the screening class taken from the TOPSBC tuple (keyed on the incoming trunk's CLLI and the caller's NXX) is valid - SCR3.

Sample NPA-NXX data (case 3) - table TOPSBC

```
CLLI        BILLCODE LCANAME SCRNCL ACTUALBC CHGCLASS
_____________________________________________________________
TBELLIC1         422    L32X   SCR3   214222     TOPS
```

The appropriate tuple (key 214 SCR3 OA) is examined in table CLSVSCRC. The CLSVSCR subtable is not empty, so it is referenced. This time, the called number, 653-1234, falls within a digit range declared in the subtable. The tuple for this range indicates the route can be found in table OFRT, index 354. This table indicates the route is to trunk TBELL2W1. This new route is set.

Sample class of service screening data (case 3) - table CLSVSCRC

```
   NPASCTYP  NORSLTS        TMTOFRT  CLSVSCR
_____________________________________________________________
214 SCR3 OA        2      N    NONE  (    1)
```

Sample class of service screening data (case 3) - subtable CLSVSCR

```
FROMDIGS                   TODIGS      TMTOFRT
_____________________________________________________________
 653                        653     T OFRT  354
```

Sample routing data (case 3) - table OFRT

```
RTE                              RTELIST
_____________________________________________________________
354               (S    D    TBELL2W1) $
```

Thus, the route obtained from code translation is superseded by the screening results. The end route is set to TBELL2W1.

Case 4: Service class indices in TRKGRP and TOPSBC

A 0- call arrives at a TOPS position from trunk group TBELLIC1. The caller gives the number that they want to reach, 653-1234, to the operator. The caller's DN is 522-1234. MULTI_NPA_NO_AMA_XLA in table TOPSPARM is set to Y. The operator keys NO AMA and enters the called number, 653-1234. Translation begins. The pretranslator name is taken from table OPRTRANS. Since the name is nil, no pretranslation occurs.

Sample operator data (case 4) - table OPRTRANS

```
   KEY       SNPA   SCRNCL   PRTNM   LCANAME
_____________________________________________________
OPERATOR     817     NSCR    NPRT      NLCA
```

The SNPA, 214, is retrieved from table TRKGRP and indexes HNPACONT. The subtable HNPACODE for this tuple contains a route reference of 225. The RTEREF tuple 225 indicates that the call should route to trunk TBELL2W2.

Sample trunk group data (case 4) - table TRKGRP

```
  GRPKEY
         GRPTYP   TRAFSNO   PADGRP   NCCLS          GRPINFO
_____________________________________________________________
TBELLIC1
           TOPS      0      TLD   NCRT 2W MIDL 214 PTOP
       NLCA SCR4 .....                          --- ----
       ---- ----                            SNPA/    \PRTNM
 LCANAME/     \SCRNCL
```

Sample code translations data (case 4) - table HNPACONT

```
STS   NORTREFS   NOAMBIGC   RTREF   HNPACODE   ATTRIB   RTEMAP
_____________________________________________________________
214      807          6 (  31)   (    1) (    0) (    0)
```

TOPS Call Processing Features (Call Processing) (continued)

Sample code translations data (case 4) - subtable HNPACODE

```
FROMDIGS                    TODIGS          CDRRTMT
_____________________________________________________
   653                       653          FRTE  225
```

Sample code translations data (case 4) - subtable RTEREF

```
RTE
_____________________________________________________
225                           S    D    TBELL2W2
```

Service class indices are retrieved from tables TRKGRP, TOPSBC, and OPRTRANS, in that order. The index in OPRTRANS is nil, (NSCR). Table TRKGRP contains index SCR4. However, table TOPSBC also contains a service class index, SCR5, so the information from TOPSBC is used for the class of service screening, based on the TRKGRP -> TOPSBC -> OPRTRANS hierarchy.

Sample NPA-NXX data (case 4) - table TOPSBC

```
CLLI        BILLCODE LCANAME SCRNCL ACTUALBC CHGCLASS
_____________________________________________________
TBELLIC1         522    L32X   SCR5   214222     TOPS
```

The called number, 653-1234, is in range in tuple 214 SCR5 OA of table CLSVSCRC, subtable CLSVSCR. This tuple indicates that the route can be found in table OFRT, index 354. This tuple routes the call to trunk TBELL2W1.

Sample class of service screening data (case 4) - table CLSVSCRC

```
   NPASCTYP  NORSLTS        TMTOFRT  CLSVSCR
_____________________________________________
214 SCR5 OA        2      N    NONE  (    1)
```

Sample class of service screening data (case 4) - subtable CLSVSCR

```
FROMDIGS                    TODIGS      TMTOFRT
_____________________________________________________
 653                         653     T OFRT  354
```

TOPS Call Processing Features (Call Processing) (continued)

Sample routing data (case 4) - table OFRT

```
RTE                                RTELIST
_____________________________________________________________
354                 (S    D    TBELL2W1) $
```

Thus, the route set by code translation is overridden by the screening results. In screening, the service class set by table TRKGRP is superseded by the service class in table TOPSBC. The call is routed to TBELL2W1.

TOPS Call Processing Features (Call Processing) (continued)

Translations with feature for NO AMA call (case 4)

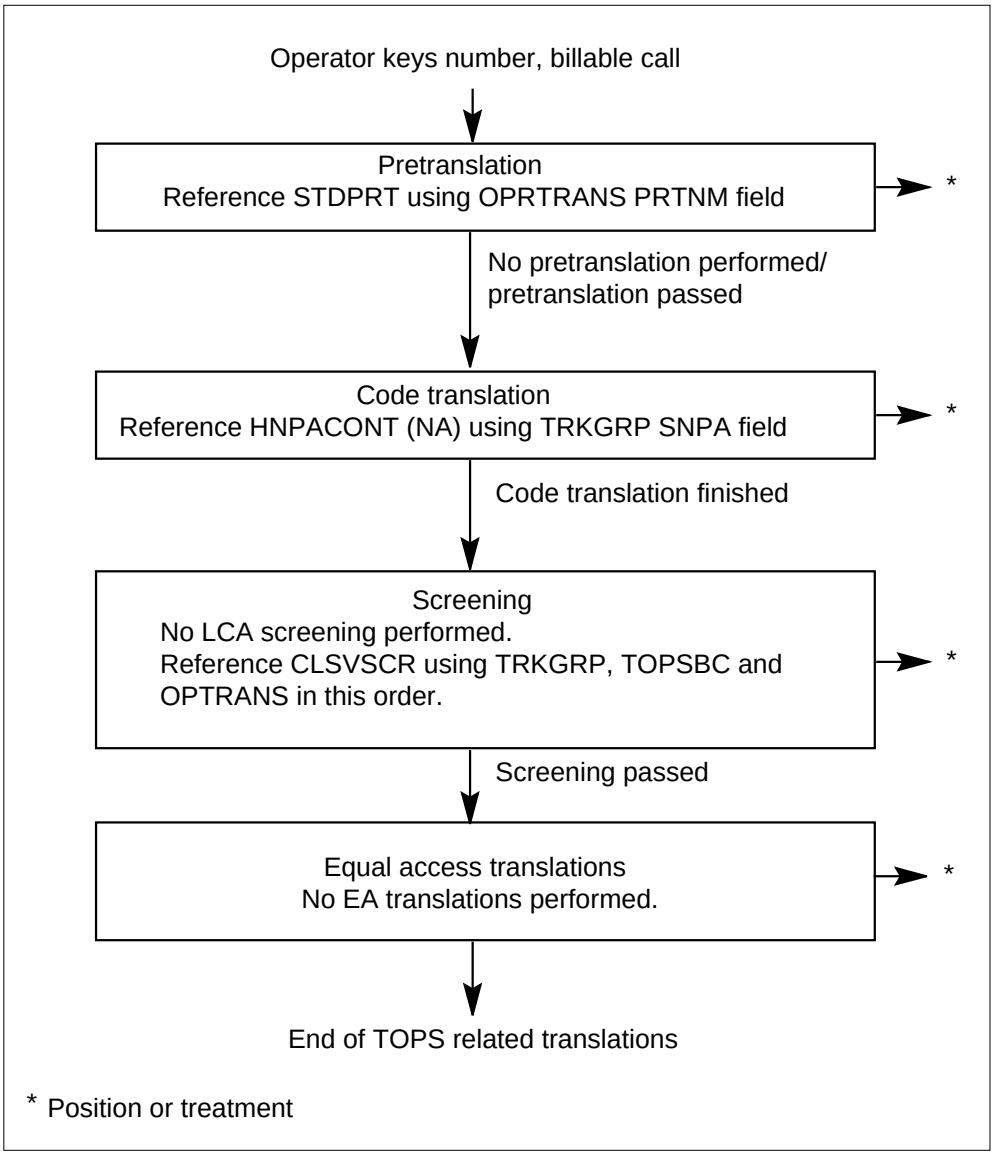

Case 5: Inwards call translations

A 0- call arrives at a TOPS position from trunk group TBELLIC1. The caller requests directory assistance, but is speaking to a toll-only operator. The caller's DN is 222-1234. MULTI_NPA_INWARD_XLA in table TOPSPARM is set to Y. The operator keys 131, the inwards code for directory assistance, and translation begins.

The pretranslator name is taken from the OPRTRANS table, OPERATOR tuple. No pretranslation is undertaken, as the name is nil.

TOPS Call Processing Features (Call Processing) (continued)

Sample operator data (case 5) - table OPRTRANS

```
   KEY       SNPA   SCRNCL   PRTNM   LCANAME
_____________________________________________________
OPERATOR     817     NSCR    NPRT      NLCA
```

The NPA (214) is retrieved from TRKGRP to index HNPACONT. The HNPACODE subtable for tuple 214 contains a route reference of 285. RTEREF tuple 285 indicates that the call should route to trunk TITOGA1.

Note: The NPA is now taken from TRKGRP. Prior to this activity, or if the MULTI_NPA_INWARD_XLA parameter is set to N, the NPA is taken from OPRTRANS[OPERATOR].)

Sample trunk group data (case 5) - table TRKGRP

```
  GRPKEY
         GRPTYP   TRAFSNO   PADGRP   NCCLS          GRPINFO
_____________________________________________________________
TBELLIC1
           TOPS       0      TLD    NCRT 2W MIDL 214 PTOP
       NLCA NSCR .....                          --- ----
       ---- ----                             SNPA/    \PRTNM
 LCANAME/     \SCRNCL
```

Sample code translations data (case 5) - table HNPACONT

```
STS   NORTREFS   NOAMBIGC   RTREF   HNPACODE   ATTRIB   RTEMAP
_____________________________________________________________
214      807          6 (  31)    (     1) (     0) (     0)
```

Sample code translations data (case 5) - subtable HNPACODE

```
FROMDIGS                    TODIGS          CDRRTMT
_____________________________________________________
   131                       131          OPC3  285
```

Sample code translations data (case 5) - subtable RTEREF

```
RTE
_____________________________________________________
285                           S     D     TITOGA1
```

TOPS Call Processing Features (Call Processing) (continued)

No LCA screening is performed, because the call is already known to be nonbillable. For class of service screening, the service class indices are retrieved from TRKGRP, TOPSBC, and OPRTRANS, in that order. These screening classes, with the NPA and call type, are used to reference a tuple in the CLSVSCRC table. If a route is datafilled for this index, there is a tuple in the CLSVSCR subtable for it. This dictates the new route that should be utilized. In this case, however, all three of the indices are nil (NSCR), so no screening is performed. No Equal Access translations are necessary, as the call is not billable.

Sample NPA-NXX data (case 5) - table TOPSBC

CLLI	BILLCODE	LCANAME	SCRNCL	ACTUALBC	CHGCLASS
TBELLIC1	222	L32X	NSCR	817260	TOPS

Therefore, the translation result is a route to trunk group TITOGA1, as set in RTEREF.

TOPS Call Processing Features (Call Processing) (continued)

Translations with feature for Inwards call (case 5)

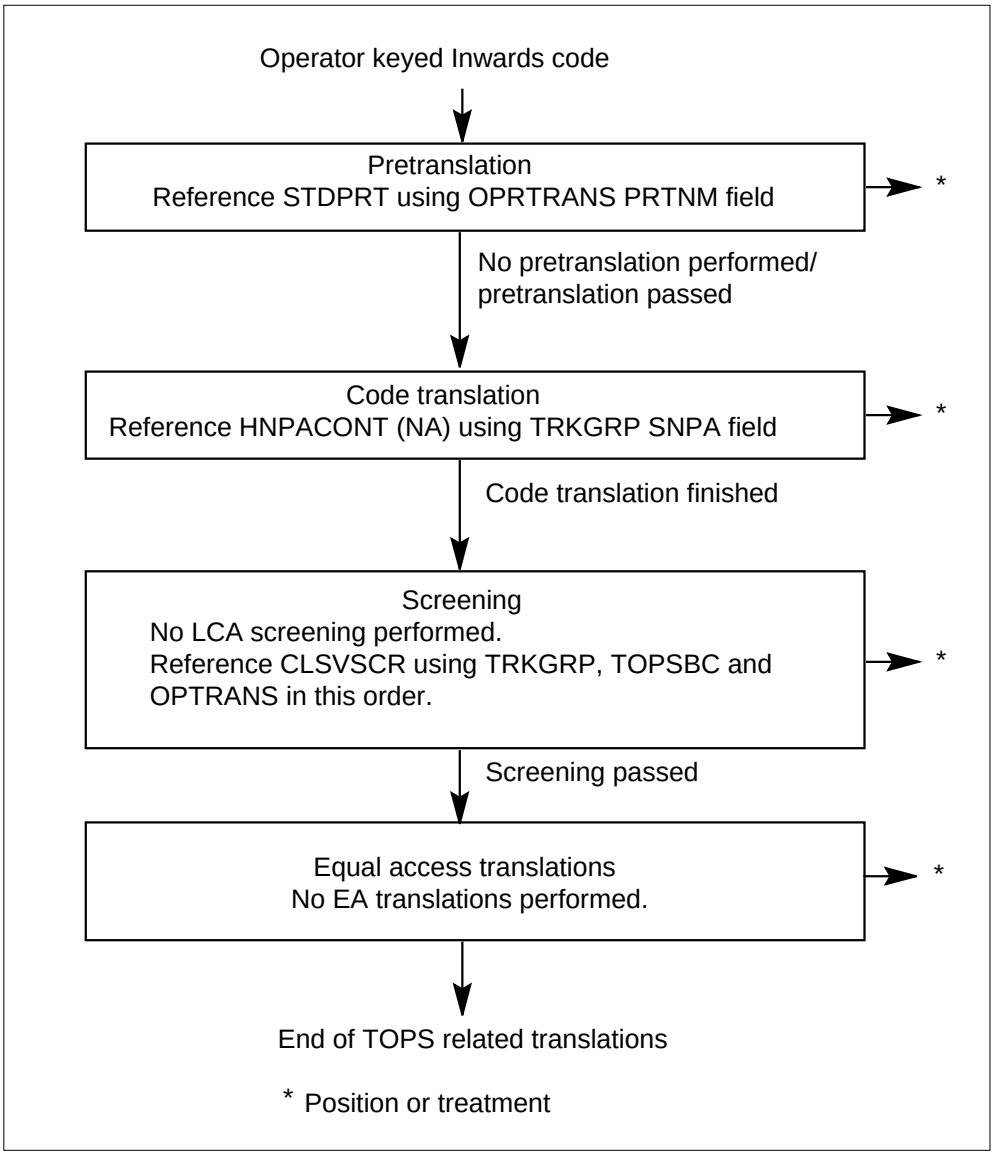

Using this feature

When using the function of this feature, consider the following points:

- Any calls that previously routed from the pretranslator continues to do so. If outgoing inwards calls used the pretranslator to route, and it is desired that the calls route out of HNPACONT or CLSVSCRC, you must either remove the called digits from the STDPRTCT.STDPRT subtable for the given pretranslator name or change the route in STDPRTCT.STDPRT so

TOPS Call Processing Features (Call Processing) (continued)

that the call falls through to code translation (meaning the PRETRTE field is set to N NL 0 NA).

- Class of service screening in table TRKGRP affects translations on a trunk by trunk basis only. If the class of service screening is datafilled only in table TRKGRP, all calls to a given number routes to the same outgoing trunk, regardless of the caller's NPA.
- Class of service screening in table TOPSBC affects translations on an NXX by NXX basis. Since each NXX can appear only once on each trunk, each NXX corresponds to only one NPA. This is the method by which calls from a single trunk routes based on the caller's NPA.
- Class of service screening in table OPRTRANS, in effect, overrides the functionality of this activity. If a screening class is datafilled in OPRTRANS[OPERATOR], all calls route using the translations data for that class of service screening, regardless of the incoming trunk, NPA or NXX.
- If using the INWARDS function of this activity, ALL INCOMING INWARDS CALLS MUST ROUTE TO A TOPS POSITION FROM THE PRETRANSLATOR. If an incoming inwards code is not routed out of the pretranslator, and is datafilled in table HNPACONT, the call routes to an outgoing trunk without coming to position.

Setting up translations for this feature

To use the NO AMA function of this activity, no new translations datafill is necessary. Translations for 0- NO AMA calls now use the same datafill as billable calls, taking the NPA from the incoming trunk group and class of service screening from tables TRKGRP and TOPSBC.

The following steps must be taken to datafill the translations tables for the inwards functionality of this activity:

1. Ensure that all incoming inwards codes are routed out of the pretranslator. For example, inwards calls using the code 131 arrive at the switch on trunk

TOPS Call Processing Features (Call Processing) (continued)

TBELLIC1. First, there must be a pretranslator name in table TRKGRP for the TBELLIC1 tuple.

Sample trunk group data (setting up feature) - table TRKGRP

```
  GRPKEY
         GRPTYP   TRAFSNO   PADGRP   NCCLS          GRPINFO
_____________________________________________________________
TBELLIC1
           TOPS       0      TLD   NCRT 2W MIDL 214 PRE1
       NLCA NSCR .....                          --- ----
       ---- ----                             SNPA/    \PRTNM
 LCANAME/     \SCRNCL
```

Next, check that the inwards code is in the range for the appropriate tuple in table STDPRTCT, subtable STDPRT.

Sample pretranslations data (setting up feature) - table STDPRTCT

```
   EXTPRTNM     STDPRT   AMAPRT
_____________________________________________________________
       PRE1     (   1)  (   0)
```

Sample pretranslations data (setting up feature) - subtable STDPRT

```
FROMDIGS                    TODIGS
                                                    PRETRTE
_____________________________________________________________
 131                         131
                                    T NL 0 TOPS 131 3 3 NONE
```

This checks table TOPS, tuple 131, to get information about the operator type and screen display, and routes the call to a TOPS position. This MUST be done for each incoming inwards code on each trunk that the code can arrive on. If this is not done, and the same inwards code is datafilled to route out of code translation or class of service screening, all incoming calls using that code route to an outgoing trunk without arriving at a TOPS position.

2. Ensure that the inwards codes that you want to use with this activity are NOT routed out of the pretranslator. For example, a customer dials 0-, reaches a toll-only operator, and requests directory assistance. The operator keys KP FWD + 131 + START. For this call to route to the directory assistance operator for the NPA of the calling party, it must not route out of the pretranslator.

TOPS Call Processing Features (Call Processing) (continued)

First, find the pretranslator name in OPRTRANS[OPERATOR].

Sample operator data (setting up feature) - table OPRTRANS

```
  KEY       SNPA   SCRNCL   PRTNM   LCANAME
_____________________________________________________
OPERATOR     817     NSCR    OPER      NLCA
```

Check that the inwards code is NOT datafilled in the STDPRT subtable of the appropriate table in STDPRTCT.

Sample pretranslations data (setting up feature) - table STDPRTCT

```
   EXTPRTNM     STDPRT   AMAPRT
_____________________________________________________
       OPER     (   1)  (   0)
```

Sample pretranslations data (setting up feature) - subtable STDPRT

```
FROMDIGS                    TODIGS
                                                PRETRTE
_____________________________________________________
 130                         130
                                  T NL 0 TOPS 130 3 3 NONE
 132                         132
                                  T NL 0 TOPS 132 3 3 NONE
```

An alternate method of ensuring that calls are not routed out of the pretranslator is to change the route given in STDPRTCT.STDPRT so that calls using that pretranslator name fall through to code translation. For example, inwards code 141 should route out of code translation or class of service screening.

First, find the pretranslator name in OPRTRANS[OPERATOR].

Sample operator data (setting up feature) - table OPRTRANS

```
  KEY       SNPA   SCRNCL   PRTNM   LCANAME
_____________________________________________________
OPERATOR     817     NSCR    OPER      NLCA
```

Next, check that the inwards code is datafilled to fall through the pretranslator in STDPRTCT[OPER].STDPRT.

TOPS Call Processing Features (Call Processing) (continued)

Sample pretranslations data (setting up feature) - table STDPRTCT

```
   EXTPRTNM     STDPRT  AMAPRT
_____________________________________________________________________
       OPER     (   1)  (   0)
```

Sample pretranslations data (setting up feature) - subtable STDPRT

```
FROMDIGS                    TODIGS
                                                          PRETRTE
_____________________________________________________________________
 141                         141
                                                  N  OA  0  NA
```

The call passes THROUGH pretranslations, and is routed from code translation or class of service screening.

3. Ensure that all outgoing inwards codes are datafilled in for code translation in table HNPACONT, subtable HNPACODE, for all valid NPAs. For example, if 131 is a valid inwards code to dial for NPAs 407 and 619, it must be datafilled for both NPAs. An inwards call to 131 with a calling party in NPA 407 should route to trunk TBELL2W2, while a call to 131 with a calling party in NPA 619 should route to trunk TBELLOG2.

Sample code translations data (setting up feature) - table HNPACONT

```
STS   NORTREFS   NOAMBIGC   RTREF   HNPACODE   ATTRIB   RTEMAP
_____________________________________________________________________
407     809          8 (  27)   (    1) (    0) (    0)
```

Sample code translations data (setting up feature) - subtable HNPACODE

```
FROMDIGS                    TODIGS          CDRRTMT
_____________________________________________________________________
   131                       131          OPC3  235
```

Sample code translations data (setting up feature) - subtable RTEREF

```
RTE
_____________________________________________________________________
235                          S    D    TBELL2W2
```

TOPS Call Processing Features (Call Processing) (continued)

Sample code translations data (setting up feature) - table HNPACONT

```
STS  NORTREFS  NOAMBIGC  RTREF  HNPACODE  ATTRIB  RTEMAP
_____________________________________________________
619     809         8 (  27)   (    1) (    0) (    0)
```

Sample code translations data (setting up feature) - subtable HNPACODE

```
FROMDIGS                    TODIGS         CDRRTMT
_____________________________________________________
   131                       131          OPC3  238
```

Sample code translations data (setting up feature) - subtable RTEREF

```
RTE
_____________________________________________________
238                          S    D    TBELLOG2
```

If each trunk in the office serves only one NPA, and routing is based solely on the NPA, this datafill is sufficient.

4. If the same inwards code could route differently based on the calling party's trunk group, as opposed to routing based on NPA or NPA-NXX, be sure to datafill a screening class in table TRKGRP. This is an unlikely scenario, but the ability to route based on the TRKGRP's class of service screening is available.

   For example, if a calling party on trunk TBELLIC1 needs to be transferred via an inward call to an office other than the one specified in HNPACONT, the class of service screening must be datafilled in table TRKGRP.

Sample trunk group data (setting up feature) - table TRKGRP

```
  GRPKEY
         GRPTYP TRAFSNO  PADGRP  NCCLS          GRPINFO
_____________________________________________________
TBELLIC1
           TOPS       0    TLD   NCRT 2W MIDL 214 NPRT
       NLCA NSCR .....                          --- ----
       ---- ----                          SNPA/    \PRTNM
 LCANAME/     \SCRNCL
```

Additionally, the digits of the inwards code must be datafilled in table CLSVSCRC, subtable CLSVSCR.

TOPS Call Processing Features (Call Processing) (continued)

Sample class of service screening data (setting up feature) - table CLSVSCRC

```
   NPASCTYP   NORSLTS          TMTOFRT   CLSVSCR
_____________________________________________________
407 SCRA OA         2       N     NONE   (    1)
```

Sample class of service screening data (setting up feature) - subtable CLSVSCR

```
FROMDIGS                      TODIGS       TMTOFRT
_____________________________________________________
 131                           131      T OFRT   25
```

Finally, the route given in CLSVSCR must be datafilled in table OFRT.

Sample routing data (setting up feature) - table OFRT

```
RTE                                RTELIST
_____________________________________________________
25                  (S    D    TBELLOG1) $
```

5. If an incoming trunk serves more than one NPA, to each instance of the incoming trunk group in table TOPSBC must contain a class of service screening, and each inwards code must be datafilled in table CLSVCRC, subtable CLSVSCR.

   For example, Trunk TGENIC1 serves NPAs 407 and 619. NPA 407 serves the NXXs 320, 321, and 322. All outgoing inwards calls for code 151 originating in these NXXs should route to trunk TBELLOG1. NPA 619 serves the NXXs 520, 521, and 522. All outgoing inwards calls for code 151 originating in these NXXs should route to trunk TBELL2W1. Following is an example of the datafill needed for this scenario.

   First, all trunk/NXX combinations must be datafilled in table TOPSBC with a valid screening class name.

TOPS Call Processing Features (Call Processing) (continued)

Sample NPA-NXX data (setting up feature) - table TOPSBC

```
CLLI        BILLCODE LCANAME SCRNCL ACTUALBC CHGCLASS
_____________________________________________________
TGENIC1          320     NLCA  S407    407320     TOPS
TGENIC1          321     NLCA  S407    407321     TOPS
TGENIC1          322     NLCA  S407    407322     TOPS
TGENIC1          520     NLCA  S619    619520     TOPS
TGENIC1          521     NLCA  S619    619521     TOPS
TGENIC1          522     NLCA  S619    619522     TOPS
```

Next, each screening class name must be datafilled in table CLSVSCRC, and each inwards code must be datafilled in subtable CLSVSCR.

Sample class of service screening data (setting up feature) - table CLSVSCRC

```
   NPASCTYP  NORSLTS        TMTOFRT  CLSVSCR
_____________________________________________
407 S407 OA        2      N    NONE  (    1)
```

Sample class of service screening data (setting up feature) - subtable CLSVSCR

```
FROMDIGS                   TODIGS      TMTOFRT
_____________________________________________
 151                        151     T OFRT 208
```

Sample class of service screening data (setting up feature) - table CLSVSCRC

```
   NPASCTYP  NORSLTS        TMTOFRT  CLSVSCR
_____________________________________________
619 S619 OA        2      N    NONE  (    1)
```

Sample class of service screening data (setting up feature) - subtable CLSVSCR

```
FROMDIGS                   TODIGS      TMTOFRT
_____________________________________________
 151                        151     T OFRT 318
```

Finally, each route out of CLSVSCR must be datafilled in table OFRT.

TOPS Call Processing Features (Call Processing) (continued)

Sample routing data (setting up feature) - table OFRT

```
RTE                                RTELIST
_____________________________________________________________
308                 (S    D    TBELLOG1) $
318                 (S    D    TBELL2W1) $
```

6. If operators have been trained to key an NPA before keying the inwards code to have inwards calls route to the correct NPA, the NPA-inwards code combination must be datafilled in HNPACONT.HNPACODE. For example, if operators have been trained to dial 407-131 to reach directory assistance, that combination must be datafilled in the HNPACONT tuple for NPA with the incoming NPA.

   Note: The CD field in subtable HNPACODE must be set to FRTE to allow translations based on six digits.

Sample code translations data (setting up feature) - table HNPACONT

```
STS  NORTREFS  NOAMBIGC  RTREF  HNPACODE  ATTRIB  RTEMAP
_____________________________________________________________
407     807         6 (  31)   (    1) (    0) (    0)
```

Sample code translations data (setting up feature) - subtable HNPACODE

```
FROMDIGS                    TODIGS         CDRRTMT
_____________________________________________________________
 407131                     407131        FRTE  18
```

Sample code translations data (setting up feature) - subtable RTEREF

```
RTE
_____________________________________________________________
18                           S    D    TBELL2W2
```

So, a call to 407-131 routes to TBELL2W2 as a result of code translation.

BK04369 - Table MPCLINK field LINKNABL description (BCS35)

Field LINKNABL in table MPCLINK is used differently than described in the data procedure section of this document. This description changes.

TOPS Call Processing Features (Call Processing) (continued)

Field LINKNABL is the time in minutes for the specified link in the tuple to become fully ENABLED. After this time, if the link is not fully ENABLED, the MPC card is System Busied and RTS'd. This is to reinitialize mechanisms on the MPC card in an all out attempt to ENABLE the link (e.g. if the link is especially critical). If this function is not desired, the LINKNABL field may be datafilled as 0 (disable this function).

If field LINKNABL is datafilled with a non-zero value, one link is ENABLED, and the second link has reached the LINKNABL timeout threshold (that is, second link has been System Busied), the ENABLED link and the MPC card are System Busied and RTS'd. To prevent the MPC card and ENABLED link from being System Busied and RTS'd in this situation, LINKNABL can be datafilled with 0 for the System Busy link (that is, disables the function).

CE20577 - TOPS: trunks with DANI won't outpulse

This PRSDOC establishes some table control restrictions for TOPS trunks with a CLGID (calling identification) of DANI (dedicated automatic number identification). Also, it establishes a new TOPS Office Parameter that controls the display of the calling number for DANI trunks on presentation to an operator. The following tables are affected: TRKGRP, TOPSBC, and TOPSPARM.

Background

There was a field problem where calls that originated on a TOPS trunk with CLGID of DANI went to an Operator Position wouldn't outpulse when the operator keyed in called digits. This problem was identified to be caused by having the OHNXXSCR (Operator Handled NXX Screening) field of the trunk group set to Y, with no corresponding entry in table TOPSBC for the trunk group/NXX combination. The DMS switch searches table TOPSBC for the entry, and when it isn't found indicates that calling digits were required (indicated by the same screen display as when the operator keyed in bad ANI information). So the Operating Company was asked to change the OHNXXSCR field to N, on these trunk groups so the call outpulses. They did that and discovered that the calling number was not displayed on call presentation to an operator.

Investigation into the reason the calling number was not being displayed showed that without an entry in table TOPSBC for the trunk group/NXX combination, the DMS switch does not display the number unless the operator requested call details. TOPS trunk groups with CLGID of DANI do not have a bill list so table TOPSBC entries are not permitted for these groups. Prior to BCS35 a workaround which was used by some Operating Companies was to first datafill the trunk group in table TRKGRP with a CLGID other than DANI. (This requires the user to specify a number of billcodes that are used on the trunk.) Next, the trunk group CLGID was changed to DANI. At this point a

user is allowed to datafill as many entries in table TOPSBC for the trunk group as were indicated by the number of billcodes provided previously. In this case the entry exists in TOPSBC so the calling number displays.

There is also another way to force the calling number to be displayed to the operator, and that is by datafilling an entry in table TOPSTOPT (TOPS Trunk Options table) with the DISPCLG (display calling number) field set to Y (yes, this means to display the calling number upon arrival).

New Method of Operation

To address the customers needs the aforementioned problems were addressed and broken into three categories: table control restrictions, calling number display, and the One Night Process.

- Table control restrictions

As of BCS35 the following table control restrictions apply:

- Table TRKGRP does not allow TOPS trunk groups with a CLGID of DANI, to have the OHNXXSCR field set to Y.
- Table TOPSBC does not allow entries for trunk groups with a CLGID of DANI.
- Calling number display

  There are two ways to cause the calling number to be displayed to the operator at call arrival for DANI trunks. First, an entry could be datafilled in table TOPSTOPT with the DISPCLG (display calling number) field set to Y (yes, this means to display the calling number upon arrival). Second, there is a new parameter in table TOPSPARM that allows the user to have the calling number displayed on DANI trunks on an office wide basis. The new parameter is called DANI_DISPLAY_CLG_NUM, and has a default value of Y (yes, which means to display the calling number when a call originating on a DANI trunk arrives at an operator).
- One Night Process

During One Night Process (ONP), to BCS35 and up, the following actions take place:

- In table TRKGRP, TOPS trunk groups that have a CLGID of DANI and the OHNXXSCR field set to Y on the dump side BCS, has the OHNXXSCR field automatically converted to N when the tuple is restored. There is no message output when this occurs.
- Table TOPSBC entries that exist on the dump side BCS which are associated with a trunk group with CLGID of DANI fails to restore, and the following error message is output: “TRUNK GROUPS WITH

TOPS Call Processing Features (Call Processing) (continued)

CLGID=DANI ARE NO LONGER NEEDED IN TOPSBC." This message is output so that the applicator knows that the tuple failure should be ignored.

Summary

In summary, the problem that was experienced with outpulsing is corrected by having the OHNXXSCR field set to N. TOPS trunks with CLGID of DANI is NOT permitted in table TOPSBC. DANI_DISPLAY_CLG_NUM in table TOPSPARM affects the display of the calling number on call presentation at an Operator Position, for trunks with CLGID of DANI. During ONP some table TRKGRP tuples may be altered, and some TOPSBC tuples may fail to restore.

NV20106 - TOPSPOS and TOPS_NUM_TRAFFIC_OFFICES

Prior to this PRSDOC, new tuples in TOPSPOS were checked against the value of the TOPS_NUM_TRAFFIC_OFFICES parameter in table OFCENG. The TEAM (team number) field of the tuple was compared to the parameter valued. If TEAM was greater than the parameter, then addition of the tuple was rejected. This PRSDOC does not affect this check.

Note: Changing of an existing tuple in TOPSPOS is not allowed..

This PRSDOC introduces a complimentary check when the office parameter is changed. If table TOPSPOS contains any tuple with the TEAM field value greater than the proposed new parameter value, the change attempt is rejected. An error message is output to indicate the problem.

UF301523 - No TRK118 when DN SEL (BCS36)

A TRK118 log is not generated when the FXNUM and ACTLNUM in table FXDNMAP do not match the identical SPLSEL data in table SPLDNID or the TOPS database tables. This is in reference to section “Tables SPLDNID and FXNMAP required datafill (BCS27)." Therefore, the reference to the TRK118 log is removed.

BK04281 - TOPS - ISUP Re-engineering Phase I

The interworking of TOPS with ISUP trunks was originally introduced in BCS 21. Since that time, automated services and other features have been added to TOPS. Then in BCS36, PRSDOC BK04281 ensures the quality and robustness of interworking TOPS and its automated services with Integrated Services Digital Network User Part (ISUP) Intertoll (IT) and Access to Tandem Carrier (ATC) trunks. This activity does not affect TOPS-ISUP trunk-to-trunk (tandem) calls, or ISUP trunk maintenance.

TOPS Call Processing Features (Call Processing) (continued)

Background

In a telephonic network, voice communication is controlled by signaling procedures executed by telephony switches.

One method of signaling multiplexes the voice signal and its associated call control signals onto the same trunk. Each trunk serves as both a voice facility and as a low-grade signaling link. This method is known as inband or Per Trunk Signaling (PTS). The Multifrequency (MF) protocol is an example of PTS.

Another method of signaling is Common Channel Signaling (CCS). Under this method, the call control signaling is physically partitioned from the voice signal. This separate signaling path is called a signaling link, and a series of these links form part of a signaling network. The advantages of CCS include an improved reliability of inter-office communication, the ability to exchange data not related to call control between offices, and a possible reduction in an office's dedicated signaling equipment. Since Common Channel Signaling does not require that each trunk have its own dedicated signaling equipment, it is possible that an office may be able to reduce its overall need for such equipment. The ISUP protocol is an example of CCS.

Description

The interworking of TOPS with ISUP signaling can best be described in three parts:

- ISUP to TOPS
- TOPS to ISUP
- Floated ISUP Calls

ISUP to TOPS: ISUP to TOPS involves an originating node signaling with ISUP interworking with a TOPS operator position. The automated services in TOPS do not support any incoming ISUP traffic.

Note, although the TOPS automated services such as ACTS, ACCS, and AABS are not supported for incoming IT and ATC trunks, there are certain automated TOPS features which are supported. These features are Automatic Directory Assistance Service (ADAS), Branding, and Personal Audio Response Service (PARS).

Furthermore, the only incoming ISUP traffic that is supported by the TOPS operator position are (1) Inward calls, and (2) non-coin, non-hotel, non-restricted, station Directory Assistance (DA) calls. The same restrictions that apply to incoming MF intertoll trunks apply to incoming ISUP intertoll trunks.

TOPS Call Processing Features (Call Processing) (continued)

Following are comments on connections.

- During a successfull connection, if no operator positions are immediately available, the call is queued for an operator and ring tone is applied.
- An unsuccessful connection occurs because of some failure during call setup. If an unsuccessful connection occurs, treatment is applied. The responsibility of applying treatment is either at the originating node (non-local) or at the TOPS office (local) depending on the datafill in table TMTMAP.
- Unlike multifrequency (MF) trunks, ISUP trunks have no operator hold capability. When the originating party releases the connection, TOPS also releases the connection.

TOPS to ISUP: There are no restrictions on outgoing traffic for ISUP IT and ATC trunks.

Following are comments on connections.

- An unsuccessful connection occurs because of some failure during the call setup phase. A connection from TOPS to a terminating node is not established. When an unsuccessful connection occurs, TOPS is connected to a suitable tone or announcement.
- A release of connection can occur from any call phase. It occurs when either TOPS or the terminating party initiates a release. The presence of an originating party to TOPS does not affect the release sequence of the TOPS to terminating party connection. The two connections, originating party to TOPS and TOPS to terminating party, are independent.

Floated ISUP calls: A call is floated when the call is no longer connected to a TOPS position or an automated system, and the originating and terminating parties are directly connected by a speech path. A floated ISUP call implies that at least one of the call parties is connected by an ISUP trunk.

Although the originating and terminating parties are directly connected in a floated call, TOPS still treats the two connections as independent. The release of one party does not directly affect the other party's connection to TOPS (although, based on the context of the call, TOPS may choose to release the remaining connection).

Interactions, limitations and restrictions

Refer to the interactions, and limitations and restrictions sections for more information.

TOPS Call Processing Features (Call Processing) (continued)

Translations table flow

The TOPS Call Processing Features (Call Processing) translation process is shown in the flowchart that follows.

TOPS Call Processing Features (Call Processing) (continued)

Table flow for TOPS Call Processing Features (Call Processing)

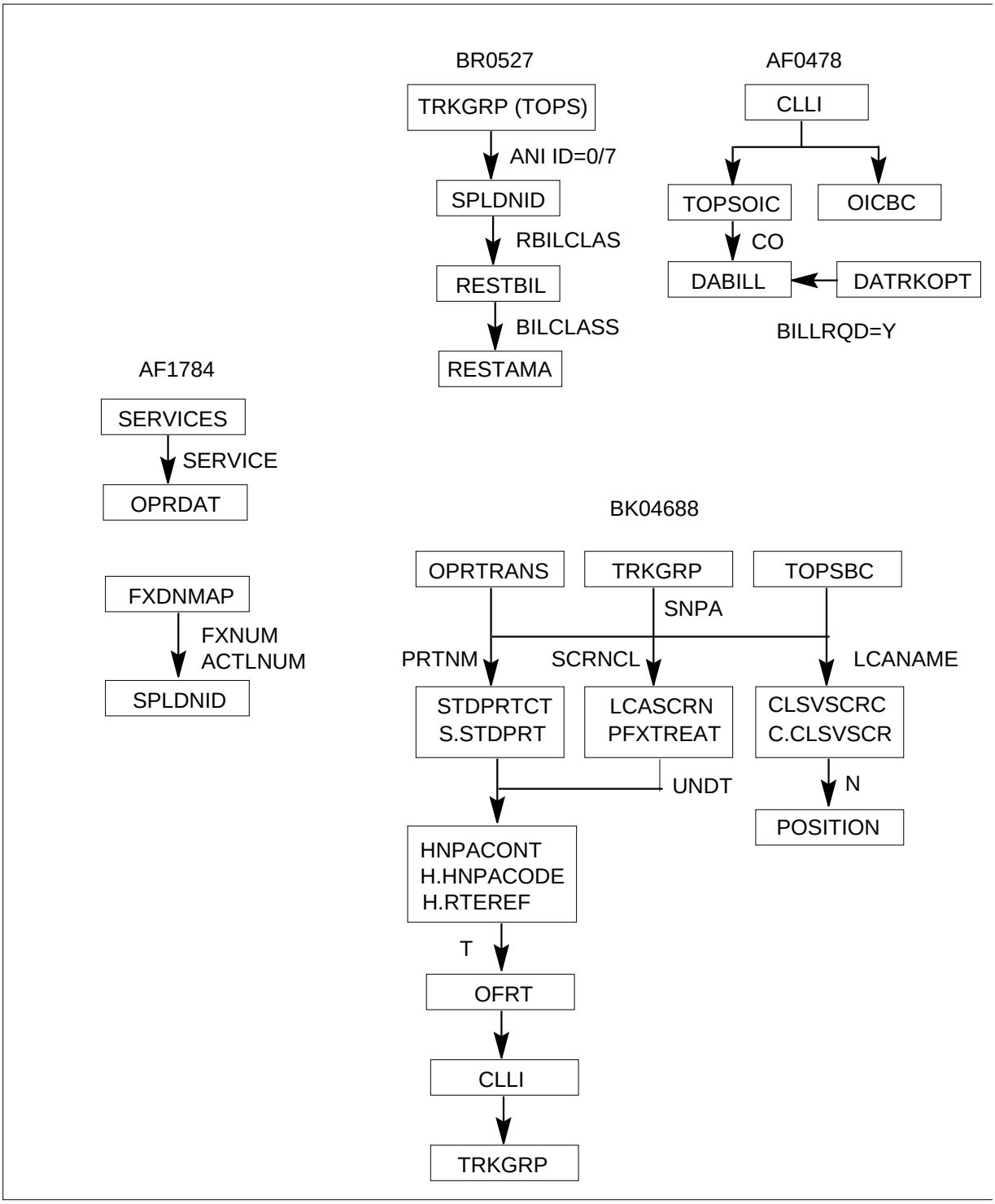

TOPS Call Processing Features (Call Processing) (continued)

Limitations and restrictions

The following limitations and restrictions apply to TOPS Call Processing Features (Call Processing):

BR0775 - Queue Selection on Trunk Group Base

Only Flat Rate (1FR), COIN, and HOTEL Line-to-TOPS operator calls associated with a trunk group CLLI and with operator calls arriving on a TOPS trunk group can be forwarded directly to a Transfer Position based on the incoming trunk group.

An operator call is forwarded to a Transfer Position on a trunk group basis only if a call cannot be completed using Mechanized Calling Card Service (MCCS) or Automatic Coin Toll Service (ACTS). Therefore, BR0775 does not affect MCCS or ACTS call handling.

CAMA calls cannot be routed to transfer positions.

BR0527 - TOPS - Charge_A_Call Enhancements

The request to “Leave Word" service is not provided for calls originating on a restricted line.

AF0477 - TOPS MP Force Management Controls and FADS

The generation of a report at the FADS TTY could extend beyond a 15-minute time frame, impacting the generation of the next 15-minute report. The 15- and 30-minute reports and the 6- and 24-hour summaries are printed at the beginning of each day at the FADS TTY at a baud rate of 300. With the addition of DA, these reports can only be generated for a maximum of 7 traffic offices to allow for completion of the printout before the initiation of the next 15-minute report printout.

AF0482 - TOPS MP Key Functions and Screen Updates

A remote TOPS MP operating on a software release prior to BCS23 cannot communicate with a host TOPS MP operating on a BCS software release greater than BCS23. This is due to the addition of a new service message to the TOPS MP that identifies a call type as DA or TA. The proper procedure for upgrading operator centralization offices to TOPS MP is as follows:

1. Update the software in the host to at least BCS23. Do not add any inservice TOPS MP positions at this time.
2. Update the software in all remotes to at least BCS23.
3. Place the TOPS MP positions on the host into service.

TOPS Call Processing Features (Call Processing) (continued)

AF2782 - TOPS Multiservice Queuing (base changes)

Specification of the QMS CAM is not permitted in tables TOPSPOS and TOPSTOPT in BCS 32.

AF3191 - OPP Base TOPS Changes

In table TOPSPOS, a protocol value of OPP may not added until the OPP package is present in the office. If the OPP package is not present, attempting to datafill a protocol value of OPP produces the error message “PROTOCOL MUST BE ASCII."

In table TOPSPOS, a position using the OPP protocol must also use the TMS for voice and data communication. Attempting to datafill a position with a protocol value of OPP and a non-TMS voice and data path produces the error message “PROTOCOL MUST BE ASCII."

DA call not released when CLG goes on-hook

The DA_AUTO_POS_RLS parameter has no effect on calls coming in to the TOPS office over ISUP or BTUP trunks. These calls remain at the TOPS position when the calling party goes on-hook, regardless of the setting of the parameter. It is recommended that users set this parameter to N when handling ADAS calls.

If the parameter is set to Y, the following call scenario may result: A DA operator receives an ADAS call and while listening to the ADAS playback, the subscriber goes on-hook. If the operator immediately receives a non-ADAS call, he/she may think the first call is still being handled when in fact, it is a brand-new DA call.

This scenario is mostly seen on MPX AOSS positions because there are no icons or other displays to let the operator know the state of the call. With all other positions such as MPs and IWS, icons are displayed to let the operator know when a customer goes on-hook. If set to Y, DA calls are automatically released from TOPS General positions when the calling party goes on-hook.

If the parameter is set to N, the subscriber would go on-hook toward the end of the initial caller's playback. The operator would then hear the end of the ADAS playback, and silence would follow. The operator could then hit the Pos Rls key. At this point, the arrival tone of the non-ADAS call would be heard and listing information could be received as usual.

If set to N, the call is not automatically released but the position is notified of the on-hook.

TOPS Call Processing Features (Call Processing) (continued)

BK04281 - TOPS - ISUP Re-engineering Phase I

Incoming ISUP traffic is restricted to the following call types:

- Inward calls
- Non-coin, non-hotel, non-restricted, station Directory Assistance calls without call completion.

Operator hold of the ISUP connection is not supported.

For an ACCS or AABS Credit Card call where the forward connection is over an ISUP trunk and treatment is applied at the terminating end office, if the calling party is connected to treatment (that is, busy) and allows the treatment to finish, the forward connection is taken down and the calling party is not able to make a sequence call.

For a Time and Charges call where the forward party is requesting the service and is connected over an ISUP trunk, if that forward party goes on-hook resulting in the release of that forward ISUP connection, then that party does not receive the Time and Charges quote. Furthermore, any Time and Charges surcharge is still applied to this party.

Coin signaling over an ISUP trunk is not supported.

Interactions

The following paragraphs describe the interactions between TOPS Call Processing Features (Call Processing) and other functionalities.

AF0720 - TOPS - Crossbar Signaling

This feature does not affect existing features but enhances the call processing capability of the DMS-100/200.

AF0720 eliminates the waiting time for the ST signal on ANI-failure and ONI calls. By using the field STNOWAIT, the DMS switch does not wait for the ST signal on these types of calls.

AF0476 - TOPS MP DA/INT Queuing

Implementation of the DA/INT Queuing feature makes changes to base software that are visible to other systems such as MERCURY. These changes are apparent even if the DA software is not present.

AF0479 - TOPS MP Expanded OGT and XFR Key Capability

The DA capability must be available before the Transfer Directory Assistance (XFR DA) function can be implemented. Without the DA capability, this

TOPS Call Processing Features (Call Processing) (continued)

feature still provides the capability to assign valid transfer and assistance functions to any available outgoing trunk key.

AF0482 - TOPS MP Key Functions and Screen Updates

The DA software must be present before the DA screen formats and key functions can be implemented.

Parallel software changes must be made to the TOPS Position Controller before the DA screen formats and key functions are operational on the TOPS MP position.

AF3191 - OPP Base TOPS Changes

If the sanity timer has been activated in table TOPSPARM, then it starts for any TOPS call in which all attached parties go on-hook while the call is at position. The sanity timer works for non-OPP as well as OPP positions.

BK02732 - DA call not released when CLG goes on-hook

Missing Billing Information

When the parameter is set to Y and the position release function is automatically attempted due to calling party on-hook, the call may not release if required billing information is not present. This is consistent with the actual keying of the POS RLS key. The same indications of missing information are sent to the position whether the POS RLS key is hit or the position release function is automatically invoked due to the operation of this new parameter.

Examples of missing information on DA calls are the Requested Number and the Calling Number (tables DATRKOPT and DABILL contain settings indicating whether this billing information is required). For chargeable DA calls, other missing billing information, such as Room Number on a Hotel call, also causes the call to not release from the position. Again, this is consistent with the workings of the POS RLS key.

Cancel Call

When the parameter is set to Y and the position release function is automatically attempted due to calling party on-hook, the operator may be denied the opportunity to hit the Cancel Call key before the call releases from the position. Operator forces may be trained to use the CA CALL + POS RLS keying sequence when no DA listing was provided to the subscriber. Cancel Call has the effect of causing a “response not provided" value (4) to be recorded in the Listing Response field (table 287) of the Listing Services module (code 055) of the AMA record. If Cancel Call is not entered before the position is released and the call is not being attached to an Audio Response Unit (ARU) for listing quotation, the “verbal" value (1) is recorded in that field even if no response was provided before the calling party went on-hook.

TOPS Call Processing Features (Call Processing) (continued)

BR31793 - Distinct number of call arrival tones on DA/TA/INTCP calls

This feature does not create any new interactions, it is merely upwards compatible with the currently existing interactions.

- This feature is compatible with QMS and the number of call arrival tones is dependent on the base services used.
- This feature is applicable to recalls.
- This feature is applicable to calls transferred from one operator to another.
- This feature is not applicable to calls transferred to an Assistance or In-Charge. This is no different from the way it currently works today since we do not provide call arrival tones at the Service Assistance (SA) or In-Charge (IC) positions.
- This feature is applicable when an SA or IC is monitoring a general operator; that is, the SA or IC hears the distinct number of call arrival tones played to the general operator if the DISTINCT_NUM_CALL_ARRIVAL_TONES parameter is activated.
- If the Personal Audio Response System (PARS) is turned on, the operators do not hear any call arrival tones; that is, this feature does not apply.
- If parameter TOPS_DA_PARS_ENABLE in table OFCOPT is activated, then this feature does not apply to DA calls. DA calls are presented to the operator with one call arrival tone using the DTMF D tone length specified by parameter TOPS_PARS_TONE_LENGTH in table OFCVAR. Refer to PRSDOC BR19254 for complete details on the PARS DTMF D tone feature.

BK04281 - TOPS - ISUP Re-engineering Phase I

This software is basic. It is part of both TOPS Call Processing, OSB00101 and CCS7 - Trunk Signalling packages.

This activity affects all ISUP to TOPS and TOPS to ISUP calls completing over non-tandem IT and non-tandem ATC trunks.

Activation/deactivation by the end user

TOPS Call Processing Features (Call Processing) requires no activation or deactivation by the end user.

Billing

BR0527 - TOPS - Charge_A_Call Enhancements

For a call routed over a trunk group designated as restricted, the Service Feature field is set in the AMA record generated, indicating the class type of the call (noncoin, coin, hotel/motel).

TOPS Call Processing Features (Call Processing) (continued)

For a Bellcore (BC) Format record, the Service Feature field is set to one of the following:

- 00 - Noncoin
- 01 - Prepay Coin
- 04 - Postpay Coin
- 11 - Hotel/Motel with Tax

For a Northern Telecom (NT) Format record, the Service Feature Code field consists of the following:

- 1 - Coin
- 0 - Noncoin
- 2 - Hotel/Motel

When a restricted coin call is forwarded to an InterLATA Carrier, the coin designation (call code or entry code) and service designation (Service Feature or Service Feature Code) is entered in the AMA record generated.

AF0478 - TOPS MP Trunking

Table DABILL indicates if DA call types are billable. Table DABILL is indexed on the call origination type and service class of the call. This table is indexed only if table DATRKOPT indicates that the TOPS office is responsible for billing.

Basic TOPS data guidelines (BCS24)

The following tables affect billing: TRKGRP (field NOBILLCD), BELLCAT, OSSCAT, RESTAMA, FXDNMAP, RESTTBIL, and TOPSBC.

BK00584 - Zenith Number 10-Digit Compatibility

Billing for zenith numbers is charged to the called party.

BK04688 - Allow multiple routing for multi-NPAs/trunk group

For billable calls, the SNPA is retrieved from table TRKGRP. For NO AMA and inwards calls the SNPA is retrieved from table OPRTRANS. Refer to section “Billable calls (background)."

Station Message Detail Recording

TOPS Call Processing Features (Call Processing) does not affect Station Message Detail Recording.

TOPS Call Processing Features (Call Processing) (continued)

Datafilling office parameters

The following table shows the office parameters used by TOPS Call Processing Features (Call Processing). For more information about office parameters, refer to *Office Parameters Reference Manual*.

Office parameters used by TOPS Call Processing Features (Call Processing)

Table name	Parameter name	Explanation and action
VROPT	DA_BLOCK_FWD_NUMBER	When this office parameter is set to Y, a DA number does not forward when an operator keys a forward number on during a DA call. If set to N, the number is forwarded.
VROPT	DA_AUTO_POS_RLS	When this office parameter is set to Y, DA calls are automatically released from TOPS positions when the calling party goes on-hook. This applies only to General (GEN) Operator Positions. If the General operator is attached to a Service Assistant or In-charge (SA/IC) operator, or has released the call to an SA/IC, none of the positions are automatically released when the calling party goes on-hook. This does not apply to calls coming into the TOPS office over BTUP trunks. This does not apply to calls at Assistance or In-charge positions. If set to N, the call is not automatically released but the position is notified of the on-hook.

Following is sample datafill.

MAP display example for table VROPT

```
                PARM                                VALUE
_______________________________________________________________
          DA_BLOCK_FWD_NUMBER                         Y
```

TOPS Call Processing Features (Call Processing) (continued)

MAP display example for table VROPT

```
                PARM                                  VALUE
_______________________________________________________________
          DA_AUTO_POS_RLS                                 Y
```

Datafill sequence

The following table lists the tables that require datafill to implement TOPS Call Processing Features (Call Processing). The tables are listed in the order in which they are to be datafilled.

Datafill tables required for TOPS Call Processing Features (Call Processing)

Table	Purpose of table
TRKGRP (TOPS)	Trunk Group. This table identifies the trunk group over which calls are routed.
TRKGRP (RONI)	Trunk Group (Remote Operator Number Identification).
TOPSPOS	TOPS Position. This table lists the positions that require two trunk circuits (one voice, one data), and identifies the trunk circuit locations.
TOPSDEV	TOPS Device. This table lists the devices that require one trunk circuit (for data) and identifies the trunk circuit locations.
SERVICES	This table allows the Operating Company to identify the vendor servicing their Directory Assistance (DA) calls.
TOPS	Traffic Operator Position System. This table is used during translations to determine the type of service required by a call based on the call origination type.
BCCODES	Bellcore code types. Defines call type for call codes.
SPLDNID	Special Directory Number.
RAO	Checks special 10-digit numbers.
RAOCHECK	Checks on credit card numbers.
RESTBIL	Restricted Billing. This table is indexed by table SPLDNID. This table contains the call name to be displayed on the Operator Position CRT and the charge classes that the operator is allowed to key to complete a restricted call.
RESTAMA	Restricted AMA. This table describes the class of service, HOTEL, COIN, or NONCOIN, entered in the Service feature field for a call originating on a restricted line.

TOPS Call Processing Features (Call Processing) (continued)

Datafill tables required for TOPS Call Processing Features (Call Processing)

Table	Purpose of table
TOPSOIC	TOPS Office Identification Code. This table specifies valid office identification codes received from an end office over a TOPS trunk group.
OICBC	Office Identification Code Billing Code. This table verifies the calling NXX code as a valid billing code for AMA purposes and specifies a charge class for the call.
DABILL	Directory Assistance Billing. This table specifies a service name to indicate if a call is billable, and whether a calling number and requested number are required.
TOPSTOPT	This table is a general TOPS table that specifies trunk options for trunks connecting to TOPS positions.
TOPSBC	TOPS billing codes.
TOPSPARM	TOPS parameters.
VROPT	Voice response options.

Datafilling table TRKGRP (RONI)

The following table shows the datafill specific to TOPS Call Processing Features (Call Processing) for table TRKGRP (RONI). Only those fields that apply directly to TOPS Call Processing Features (Call Processing) are shown. For a description of the other fields, refer to the data schema section of this document.

Datafilling table TRKGRP (RONI)

Field	Entry	Explanation and action
NBECID	0-9999	This field specifies the Non-BOC Exchange Carrier identification associated with the RONI calls originating on the trunk.
SNPA	all valid SNPAs	This field specifies the Serving Numbering Plan Area associated with the RONI calls originating on the trunk.

Datafilling table TOPSPOS

The following table shows the datafill specific to TOPS Call Processing Features (Call Processing) for table TOPSPOS. Only those fields that apply directly to TOPS Call Processing Features (Call Processing) are shown. For a

TOPS Call Processing Features (Call Processing) (continued)

description of the other fields, refer to the data schema section of this document.

Datafilling table TOPSPOS

Field	Subfield or refinement	Entry	Explanation and action
POSNO		numeric (0 to 9999)	Position number. In a TOPS OC network, operator positions that provide directory assistance (DA) or intercept services must have unique position numbers. This applies across the network and to all software releases. Position numbers must be different between the host and its remotes, and between remotes off the same host.
SVCSET		TASERV, ALL, DASERV, or INTECSERV	The TOPS Position (TOPSPOS) table lists the positions that require two trunk circuits (one voice, one data), and identifies the trunk circuit locations. The In-Charge, Assistance, and Operator Positions are assigned in this table. When assigning the Operator Positions, specify the types of calls that the position handles (general, transfer one, or transfer two). This table also lists the Traffic Office number to which the position belongs. This table now includes Intercept Service (INTCSERV) as a valid service type. This field defines the set of services that the position may handle. The Service Set (SVCSET) field defines the type of service(s) provided at a particular position, e.g., toll assistance (TASERV). The value TASERV should be datafilled in the SVCSET field for all positions off of a DMS switch without the Directory Assistance (DA) software. The other allowable values for the SVCSET field are ALL, DASERV, and INTCSERV.

TOPS Call Processing Features (Call Processing) (continued)

Datafilling table TOPSPOS

Field	Subfield or refinement	Entry	Explanation and action
			The NONE (empty set) value cannot be used, and the following restrictions apply: • If the NONE value is used, the error message EMPTY SVCSET NOT ALLOWED is displayed. • If the ALL or DASERV values are used and the DA software is not present, error message DA CAPABILITY IS NOT PROVIDED is displayed and the ADD Table Editor command is rejected. • If the INTCSERV value is used and the Intercept software is not present, error message INTC CAPABILITY IS NOT PROVIDED is displayed and the Table Editor command is rejected. ***Note:*** When data is entered on a field-by-field basis into the SVCSET or the XFRSET field, this data must all be entered on one line, but does not have to be ended by a dollar sign (terminator character). However, if the no-prompt version of the ADD Table Editor command is used, the dollar sign must be used to terminate the data added to the field. The values GEN, XFR1, and XFR2 are the only entries permitted in the XFRSET field.
PMTYPE			This field now includes TMS as a valid PM type
VCCKT			now includes TMS as a valid voice circuit.
If PMTYPE is TMS, the following subfields apply:			
	TMSNO	0-255	TMSNO specifies the TMS on which the voice circuit exists.
	TMSCKTNO	0-19	TMSCKTNO specifies the P-side port number of the voice circuit.
	TMSCKTTS	1-24	TMSCKTTS specifies the channel number of the voice circuit.

TOPS Call Processing Features (Call Processing) (continued)

Datafilling table TOPSPOS

Field	Subfield or refinement	Entry	Explanation and action
	CNTRLR		CNTRLR is now a selector field, and also includes TMSTPC as a valid controller type. If CNTRLR is NT4X71 or TPC, the fields DTCKT, DTGRP, and PROTOCOL are subfields of CNTRLR.
If CNTRLR is TMSTPC, the following subfields apply:			
	TPCNO	0-254	TPCNO specifies the TPC number.
	MPNO	0-3	MPNO specifies the HSLI card on the TPC to which the TOPS MP is configured. These cards are numbered from left to right on a TPC shelf.
ACD		TOPSACD or QMSCAM	This is a new field that appears only if field POS=OPR. This new field appears after field TEAM. Specification of the QMS CAM is not permitted in BCS 32. In BCS 33 and later software releases, specification of the QMS CAM are permitted for offices containing the optional QMS package. For offices that have the optional QMS package, the capability to specify the ACD on a per position basis permits both ACDs to coexist on a switch and allows for a gradual cutover of positions from the existing ACD to the new one.

Datafill example for table TOPSPOS

The following example shows sample datafill for table TOPSPOS.

MAP display example for table TOPSPOS

```
POSNO
             VCCKT  VCPDGRP  CARDCODE


        POSAREA
                                        CNTRLR
_____________________________________________________________
  100
             TM8    0 24   NPDGRP    2X722A
                           OPR 1 TASERV $ GEN XFR1 XFR2 $
  NT4X71     TM8    0 25   NPDGRP   BELL108
  101
             TM8    0 26   NPDGRP    2X722A
                           IC 1 TASERV $
  NT4X71     TM8    0 27   NPDGRP   BELL108
  312
             DTC 0  3 13   NPDGRP    DS1SIG
                           OPR 2 TASERV $ XFR2 $
  NT4X71      DTC 0  3 14 NPDGRP   BELL202
```

The following example shows sample datafill for table TOPSPOS.

MAP display example for table TOPSPOS

```
   POSNO VCCKT     VCPDGRP CARDCODE DATAPATH

------------------------------------------------------------
   300   TM8 0 24  NPDGP   2X72AA   DMODEM   SP  ASCII  TM8

                          POSAREA

------------------------------------------------------------
 0  25  NPDGP  BELL108   OPR  1 TOPSACD  TASERV $ GEN XFR1 $
```

Datafill example for table TOPSPOS

Field PROTOCOL is changed to allow specification of OPP. In Field PROTOCOL, value ISI is renamed OPP for Open Position Protocol. Following is an entry in table TOPSPOS for an OPP position:

The following example shows sample datafill for table TOPSPOS.

TOPS Call Processing Features (Call Processing) (continued)

MAP display example for table TOPSPOS

```
POSNO
              VCCKT VCPDGRP   CARDCODE
                                          DATAPATH

POSAREA
_____________________________________________________________________
  204
              TMS    1 0 15    NPDGP     DS1SIG
                                   TMS MP OPP  27 0
                                              OPR  2 QMSCAM
CORE 6
```

Datafilling table TOPSDEV

The following table shows the datafill specific to TOPS Call Processing Features (Call Processing) for table TOPSDEV. Only those fields that apply directly to TOPS Call Processing Features (Call Processing) are shown. For a description of the other fields, refer to the data schema section of this document.

Datafilling table TOPSDEV

Field	Entry	Explanation and action
CNTRLR	range of values includes TMSTPC	CNTRLR is now a selector field. TMSTPC cannot be datafilled in BCS28.
MEMVAR		MEMVAR is now a subfield of field CNTRLR if CNTRLR is TPC or NT4X71.
CARDCODE		CARDCODE is now a subfield of field CNTRLR if CNTRLR is TPC of NT4X71.
PROTOCOL		PROTOCOL is now a subfield of field CNTRLR if CNTRLR is TPC or NT4X71.
TPCNO	0-256	TPCNO is a subfield of CNTRLR if CNTRLR is TMSTPC.
MPNO	0-3	MPNO is a subfield of CNTRLR if CNTRLR is TMSTPC.

Datafilling table SERVICES

The SERVICES table allows the Operating Company to identify the vendor servicing their Directory Assistance (DA) calls.

TOPS Call Processing Features (Call Processing) (continued)

The following table shows the datafill specific to TOPS Call Processing Features (Call Processing) for table SERVICES. Only those fields that apply directly to TOPS Call Processing Features (Call Processing) are shown. For a description of the other fields, refer to the data schema section of this document.

Datafilling table SERVICES

Field	Entry	Explanation and action
INDEX	1-3	Enter 1, 2, or 3 as the key to the table.
SERVICE	TASERV, DASERV, or INTCSERV	Enter the types of services available in the TOPS: • Enter TASERV for the toll and assistance service. No further datafill is required. • Enter DASERV for the directory assistance service and datafill refinements PROTOCOL, DATALINK, LSDBID, MINOR, MAJOR, and CRITICAL • Enter INTCSERV for the intercept services and datafill refinements PROTOCOL, DATALINK, LSDBID, MINOR, MAJOR, and CRITICAL
LSDBID	0-9999	This field is a refinement for DASERV and INTCSERV, and specifies the listing services database identifier used by the DASERV and INTCSERV. The value INTCSERV cannot be datafilled in table SERVICES in BCS28.

Datafill example for table SERVICES

The following example shows sample datafill for table SERVICES.

MAP display example for table SERVICES

```
INDEX   SERVDATA
_____________________________________________________________

    1       TASERV
    2       DASERV CCI MPC 2138
```

Datafilling table TOPS

The Digit Translation Routing to TOPS (TOPS) table determines the screen displays for each call type and determines to which position each type of call routes. To index table TOPS, the trunk group over which the call is routed must specify a pretranslator name used to index the STDPRTCT table.

TOPS Call Processing Features (Call Processing) (continued)

The following table shows the datafill specific to TOPS Call Processing Features (Call Processing) for table TOPS. Only those fields that apply directly to TOPS Call Processing Features (Call Processing) are shown. For a description of the other fields, refer to the data schema section of this document.

Datafilling table TOPS

Field	Entry	Explanation and action
POSTYPE	GEN, XFR1, DA, or XFR2	The POSTYPE field specifies to which type of position each call type will route. The originating call type indexes into table TOPS. Most calls route to the General Positions. If, however, the subscriber wants to route all 555 directory assistance calls to a transfer 1 position, the POSTYPE field for 555 is datafilled XFR1, the selector (SEL) field is set to C, and the DISPLAY field is assigned a directory assistance indicator.
SERVTYP	TASERV, DASERV, or INTCSERV	In BCS28, the SERVTYP field is expanded to include INTCSERV as a valid service type. This entry produces an error message in BCS28 (INTC CAPABILITY NOT PROVIDED).

Datafilling table BCCODES

The following table shows the datafill specific to TOPS Call Processing Features (Call Processing) for table BCCODES. Only those fields that apply directly to TOPS Call Processing Features (Call Processing) are shown. For a description of the other fields, refer to the data schema section of this document.

Datafilling table BCCODES

Field	Subfield or refinement	Entry	Explanation and action
CODES			As of BCS28, there are 14 additional call codes that can be entered in table BCCODES. These are the call codes used by TOPS Expanded Bellcore AMA Format (EBAF).

Datafilling table SPLDNID

The Special Directory Number (SPLDNID) table is indexed under the following conditions:

- when the ANI spill for a call on a Combined trunk group includes ANI ID digit 7
- when the ANI spill for a call on a Restricted trunk group includes ANI ID digits 0 or 7
- when the ANI spill for a call on a DN Lookup trunk group includes ANI ID digit 0.

These ANI ID digits index the SPLDNID table where the DMS switch searches to match the calling number to a special directory number datafilled in this table. When no match of the calling number is found, the call is handled as a standard call.

The following table shows the datafill specific to TOPS Call Processing Features (Call Processing) for table SPLDNID. Only those fields that apply directly to TOPS Call Processing Features (Call Processing) are shown. For a description of the other fields, refer to the data schema section of this document.

Datafilling table SPLDNID

Field	Subfield or refinement	Entry	Explanation and action
SEL	RESCOIN, RBILCLASS, BILCLASS	RSTRCTD, COIN	A line is restricted if the RSTRCTD selector is associated with a calling number, or when the COIN selector (subfield RESCOIN set to Y) is associated with the calling number. The datafill for a restricted coin line is assigned selector COIN. Subfield RESCOIN is set to Y, and subfield RBILCLASS is assigned an index into the RESTBIL table. For other restricted calls, the SEL field is datafilled as RSTRCTD and subfield BILCLASS is assigned an index into table RESTBIL.

Datafill example for table SPLDNID

The following example shows sample datafill for table SPLDNID.

TOPS Call Processing Features (Call Processing) (continued)

MAP display example for table SPLDNID

```
SPLDN                          SPLSEL
_____________________________________________________________
6132390003              RSTRCTD 0
6132390004              COIN STD ACTS Y 1
```

Datafilling tables RAO and RAOCHECK

The following table shows the datafill specific to TOPS Call Processing Features (Call Processing) for tables RAO and RAOCHECK. Only those fields that apply directly to TOPS Call Processing Features (Call Processing) are shown. For a description of the other fields, refer to the data schema section of this document.

Datafilling tables RAO and RAOCHECK

Field	Entry	Explanation and action
RAOCODE	0-9 (3 digits)	Beginning in BCS30, the RAO codes for the 10-digit special numbers must be datafilled in table RAO to be valid, but the RAO codes for the 14-digit calling cards must be datafilled in table RAOCHECK rather than table RAO. This allows the same RAO code to be valid for one type of number but not the other. If the code is valid for both types, it must be datafilled in both table RAO and table RAOCHECK.

Datafill example for table RAO

The following example shows sample datafill for table RAO.

MAP display example for table RAO

```
RAOCODE
_____________________________________________________________
321
```

Datafill example for table RAOCHECK

The following example shows sample datafill for table RAOCHECK.

MAP display example for table RAOCHECK

```
RAOCODE
_____________________________________________________________
727
```

Datafilling table RESTBIL

The Restricted Billing (RESTBIL) table is indexed by table SPLDNID. This table contains the call name to be displayed on the Operator Position CRT and the charge classes that the operator is allowed to key to complete a restricted call. The name warns the operator that a call requiring special billing has accessed the Operator Position.

Datafill example for table RESTBIL

The following example shows sample datafill for table RESTBIL.

MAP display example for table RESTBIL

```
BILCLASS        SCRNDISP          BILTYPES
_____________________________________________________________
   0            INMATE            COL
   1            COINLESS          COL CC 3RD SPLCLG
   2            DORM              CC SPLCLG COL
```

Datafilling table RESTAMA

The Restricted AMA (RESTAMA) table describes the class of service, HOTEL, COIN, or NONCOIN, entered in the Service feature field for a call originating on a restricted line. This information is entered in the Bellcore Format (BCFMT) AMA record or in the Northern Telecom Format (NTFMT) AMA record.

Datafill example for table RESTAMA

The following example shows sample datafill for table RESTAMA.

MAP display example for table RESTAMA

```
BILCLASS             AMACLASS
_____________________________________________________________
   1                          NONCOIN
   2                          COIN
```

Datafilling table TOPSTOPT

This new table is a general TOPS table that specifies trunk options for trunks connecting to TOPS positions.

The following table shows the datafill specific to TOPS Call Processing Features (Call Processing) for table TOPSTOPT. Only those fields that apply directly to TOPS Call Processing Features (Call Processing) are shown. For a

TOPS Call Processing Features (Call Processing) (continued)

description of the other fields, refer to the data schema section of this document.

Datafilling table TOPSTOPT

Field	Entry	Explanation and action
CLLI	see explanation	Specify a valid incoming or two-way trunk predefined in tables CLLI and TRKGRP. If a trunk CLLI is not datafilled in this table, TOPS ACD processing is presumed for all calls arriving over that trunk group in BCS 32.
ACD	TOPSACD or QMSCAM	Specify the Automatic Call Distributor to be used for calls arriving over the trunk specified in the CLLI field. Specification of the QMS CAM is not permitted in BCS 32. In BCS 33 and later software releases, specification of the QMS CAM is permitted for offices containing the optional QMS package. For offices that have the optional QMS package, the capability to specify the ACD on a per trunk group basis permits both ACDs to coexist on a switch and allows for a gradual cutover of traffic from the existing ACD to the new one.
DISPCLG		There are two ways to cause the calling number to be displayed to the operator at call arrival for DANI trunks: • First, an entry could be datafilled in table TOPSTOPT with the DISPCLG (display calling number) field set to Y (yes, this means to display the calling number upon arrival). • Second, there is a new parameter in table TOPSPARM which allows the user to have the calling number displayed on DANI trunks on an office wide basis. The new parameter is called DANI_DISPLAY_CLG_NUM, and has a default value of Y (yes, which means to display the calling number when a call originating on a DANI trunk arrives at an operator).

Datafill example for table TOPSTOPT

The following example shows sample datafill for table TOPSTOPT.

MAP display example for table TOPSTOPT

```
        CLLI              ACD
_____________________________________________________________
       TOPSIN1           TOPSACD
       TOPSIN2           TOPSACD
```

Datafilling table TOPSBC

As of BCS35, table TOPSBC no longer allows entries for trunk groups with a CLGID of DANI.

Datafilling table TOPSPARM

The following table shows the datafill specific to TOPS Call Processing Features (Call Processing) for table TOPSPARM. Only those fields that apply directly to TOPS Call Processing Features (Call Processing) are shown. For a description of the other fields, refer to the data schema section of this document.

Datafilling table TOPSPARM

Parameter name	Explanation and action
DISTINCT_NUM_CALL_ARRIVAL_TONES	The range is Y (enable) and N (disable). If disabled, the number of tones remains the same as before this feature.
DOM_CCARD_FORMAT_CHECKS	Domestic calling card format checks. This parameter allows disabling of RAO and NPA checks on North American 14-digit domestic calling card number formats. This parameter is provided for countries in North America that have open numbering, so do not have these format requirements. The values for this parameter are: Y - Enable the RAO and NPA checks as prior to this parameter. These checks are the following: • In North America, domestic calling card number formats are checked for one of the following: — The card number has a 0 or 1 as its forth digit, making it an RAO card. — The card number begins with a valid North American NPA; that is, the first digit is in the range 2-9. • Also, the following requirements are enforced: — The card number does not begin with 700, 800, or 900. — The card number begins with a valid North American NPA; that is, the first digit is in the range 2-9. — The four digit personal identification number (PIN) does not begin with 0 or 1.

TOPS Call Processing Features (Call Processing) (continued)

Datafilling table TOPSPARM

Parameter name	Explanation and action
	N - Disable the RAO and NPA checks as follows: • The domestic calling card number is not checked to determine if it is an RAO card. • Since the domestic calling card number is not an RAO card, checks in tables RAO and RAOCHECK are skipped. Also, the RAO number is not removed from the billing number field of module codes 061 and 066. Additionally, the RAO number is not recorded as a “special number" in the Billing Type Identification field of module codes 052 and 061; it is instead recorded as a calling card. • Since this card is not an RAO card but a valid NPA card, checks in tables NPACHECK are skipped. And, since datafill in table NPACHECK determines whether further checks in table CHKDIGIT are involved, table CHKDIGIT is also ignored. • “Vfy" is no longer displayed to the operator if a non-RAO domestic calling card's first three digits are not in table NPACHECK and table CHKDIGIT is no longer checked. • The following check is not performed: Verification that a domestic calling card number does not begin with digits 700, 800, or 900, or have 555 as digits 4-6. • Verification that the PIN begins with a digit in the range 2-9 is skipped.

TOPS Call Processing Features (Call Processing) (continued)

Datafilling table TOPSPARM

Parameter name	Explanation and action
	The default is Y. The following calling card checks are independent of card format and numbering plan so are not affected by this parameter: • regional domestic credit card checks in tables DOMBILL and REGNUM • table HOTLIST checks This parameter is checked on all TOPS office call types that may be billed to a domestic calling card number. This includes operator-assisted (OA), MCCS, AABS, and OSSAIN calls. This parameter is checked in North American and open numbering plan offices. This parameter also affects card numbers in table INTCCFMT that require transitional validation. These card numbers use an ITU-T format, but are subject to the same format validation as 14-digit domestic calling cards.
MP_DISPLAY_POSSIBLE_AUTOMATION	This new value allows a TOPS MP position display to indicate that an arriving call could have been automated but was not. Set the parameter to Y to enable the display.
MF_TRUNK_WINK_REQUEST_DELAY	This parameter specifies the delay (in TENMS) before a wink is sent to an End Office to request ANI. The parameter applies to MF TOPS trunks equipped with MF receivers. The default value is 25 TENMS (250ms).
MULTI_NPA_INWARD_XLA	A value of Y for MULTI_NPA_INWARD_XLA causes inwards calls to route using the calling party's trunk group data. Otherwise, translations are performed as before, using the operator's translations data for routing. The default value is N.
MULTI_NPA_NO_AMA_XLA	A value of Y for MULTI_NPA_NO_AMA_XLA causes NO AMA calls to route using the calling party's trunk group data. Otherwise, translations are performed as before, using the operator's translations data for routing. The default value is N.

TOPS Call Processing Features (Call Processing) (continued)

Datafilling table TOPSPARM

Parameter name	Explanation and action
POSITION_SANITY_TIMER	POSITION_SANITY_TIMER activates or deactivates the sanity timer, and associates a time value (in minutes) with the activated sanity timer.
RONI_TAKE_DOWN_DELAY	This parameter allows the Operating Company to indicate whether they have slow CAMA offices interfacing with the DMS, which require additional time between RONI trunks (same pair) going on-hook. The value that is datafilled can either be N or Y. Where Y waits approximately 1.5-2.5 seconds for a successful digits indication, N defaults to the original 500ms-1.5 seconds.
SA_QUEUEING_BY_REQUEST_AGE	This parameter can be set to Y or N. When set to Y, queuing is done by request age. When set to N, the old algorithm for SA/IC queuing is used. The default value is N.
ZENITH_TEN_DIGIT_DIALLING	If this parameter is set to N, the area code is stripped from the Zenith number. If the parameter is set to Y, the Zenith number area code is not affected, so the Zenith number remains as 10 digits.

Datafill example for table TOPSPARM

The following example shows sample datafill for table TOPSPARM.

MAP display example for table TOPSPARM

```
PARMNAME                                          PARMVAL
_____________________________________________________________
DISTINCT_NUM_CALL_ARRIVAL_TONES                         Y
DOM_CCARD_FORMAT_CHECKS                                 Y
MP_DISPLAY_POSSIBLE_AUTOMATION                          Y
MF_TRUNK_WINK_REQUEST_DELAY                            15
MULTI_NPA_INWARD_XLA                                    N
MULTI_NPA_NO_AMA_XLA                                    N
POSITION_SANITY_TIMER                               Y   4
RONI_TAKE_DOWN_DELAY                                    Y
SA_QUEUEING_BY_REQUEST_AGE                              Y
ZENITH_TEN_DIGIT_DIALLING                               Y
```

TOPS Call Processing Features (Call Processing) (continued)

BK04688 - Allow multiple routing for multi-NPAs/trunk group (BCS35)

This activity modifies table TOPSPARM that contains TOPS parameters. Two new parameters, MULTI_NPA_INWARD_XLA and MULTI_NPA_NO_AMA_XLA, are added to this table to activate or deactivate the functionalities of this activity. The default value of these parameters is N.

Datafilling table VROPT

The following table shows the datafill specific to TOPS Call Processing Features (Call Processing) for table VROPT. Only those fields that apply directly to TOPS Call Processing Features (Call Processing) are shown. For a description of the other fields, refer to the data schema section of this document.

Datafilling table VROPT

Parameter name	Explanation and action
DA_BLOCK_FWD_NUMBER	If set to Y, a DA number does not forward when an operator keys a forward number on during a DA call. If set to N, the number is forwarded.

TOPS Call Processing Features (Call Processing) (continued)

Datafilling table VROPT

Parameter name	Explanation and action
DA_AUTO_POS_RLS	If set to Y, DA calls are automatically released from TOPS positions when the calling party goes on-hook. This applies only to General (GEN) Operator Positions. If the General operator is attached to a Service Assistant or In-charge (SA/IC) operator, or has released the call to an SA/IC, none of the positions are automatically released when the calling party goes on-hook. This does not apply to calls coming into the TOPS office over BTUP trunks. This does not apply to calls at Assistance or In-charge positions. If set to N, the call is not automatically released but the position is notified of the on-hook.
DA_DELAY_BLOCK_FWD_BK	New parameter DA_DELAY_BLOCK_FWD_BK in table VROPT allows the KP Forward, KP Back, and SPL Verify operator keying functions to be disabled on delay calls for operators on MP positions that are of DA service only (DASERV/INTCSERV are the only services in the operator's service set - table OPRDAT). If the DA_DELAY_BLOCK_FWD_BK parameter is set to Y when a DA only operator brings up a delay call, then the KP Forward and KP Back keying functionality are disabled. If the parameter is set to N, normal functionality holds. This parameter works on an office wide basis.

The following example shows sample datafill for table VROPT.

MAP display example for table VROPT

```
                PARM                                VALUE
_______________________________________________________________
          DA_AUTO_POS_RLS                             Y
          DA_BLOCK_FWD_NUMBER                         Y
          DA_DELAY_BLOCK_FWD_BK                       Y
```

Translation verification tools

TOPS Call Processing Features (Call Processing) does not use translation verification tools.

TOPS Call Processing Features (Call Processing) (end)

SERVORD

TOPS Call Processing Features (Call Processing) does not use SERVORD.

TOPS Call Processing Features (Coin)

Ordering codes

Functional group ordering code: OSB00101

Functionality ordering code: not applicable

Release applicability

TOPS15 and up

Prerequisites

To operate, TOPS Call Processing Features (Coin) requires the following:

- Functionality BAS Generic, BAS00003
- Table TOPSFTR paramter TOPS_ON_OFF_SWITCH = Y

Description

This functionality is provided by the following features:

Feature number	Feature name
BV0169	Coin Control Method - Inband
BC1147	TOPS Expanded Inband Coin Control
BR0195	Coin Control Method - Multiwink
BR0087	Coin Control Method - Line Number
BV0306	Flash Recall During Initial Period
BV0348	Automatic Collection of Deposit on Release
BR0337	Variable Local Coin Charge
F1112	Variable Initial Period
AF0073	TOPS Coin Supervision Signaling Option
AL0418	Coin First Return on Disconnect

This document describes the features that make up the Coin Features portion of the TOPS Call Processing Features software package.

There are two categories of coin telephones: Prepay and Postpay.

TOPS Call Processing Features (Coin) (continued)

Prepay Coin Telephones

With a prepay coin telephone, a coin deposit is required before dial tone can be received. This type of phone has an intermediate container, called a hopper, which can be tipped in one of two directions. When necessary, the operator can either depress the COIN COL key to tip the coins into the collection box, or depress the COIN RET key to direct the coins down the return chute. Coins are returned automatically when the call is not completed.

Within the Prepay Coin Telephone category, there are two types of telephones: Prepay Coin First and Prepay Dial Tone First.

Prepay Coin First

In a Prepay Coin First Telephone (also known as Coin Coin-First [CCF]), a coin deposit is required before dial tone is returned. For local calls, coins are held in the hopper until a connection is made at both ends and are collected when the calling party goes on-hook at the end of the call or, on toll calls, when the initial or the coin recall period expires. The coins are returned if the call is connected to an operator or to a free number, or if no connection is established.

Toll calls are placed through an operator or through an Automatic Coin Toll Service (ACTS). Local operator assisted calls are not timed and a flat fixed fee is collected at the termination of a successful call. Many areas have a timed rate option (non-TOPS option), but collect when a call is first placed.

Prepay Dial Tone First

Prepay Dial Tone First Telephones (also known as Coin Dial Tone-First [CDF]) are similar to Prepay Coin First telephones, except that dial tone is received as soon as the calling party goes off-hook. A coin deposit is not required to receive dial tone. Operator or information calls (X11 type service calls) do not require a coin deposit. For calls that do require a deposit (except for 1+ or 0+ calls), a coin deposit is required before dialing. The coins are held in the hopper and are collected when the calling party goes on-hook at the end of a call or, on toll calls, when the initial or the coin recall period expires. Coins are returned for calls that are abandoned or terminate at a free number after the calling party goes on-hook.

Postpay Coin Telephones

With a postpay coin telephone, dial tone is received as soon as the off-hook condition is detected. In postpay coin telephones, the deposit slots are connected directly to the collection box. With this type of telephone, the operator asks the customer to deposit the required amount only after the called station or party has been reached. The postpay coin telephone can accept coin deposits, but is not equipped to return coins.

TOPS Call Processing Features (Coin) (continued)

Within the Postpay Coin Telephone category, there is one type of telephone: the Semi-post Pay Telephone.

Semi-post Pay

With the Semi-post Pay Telephone, dial tone is returned as soon as the calling party goes off-hook and dialing can start before a coin deposit is made. Calls to an operator or a free number do not require a coin deposit. In all other types of calls, transmission is blocked and the calling party cannot be heard until a coin deposit is made. With this type of telephone, a refund is not possible.

BV0169 - Coin Control Method - Inband

Inband Coin Control is a signaling method that uses multifrequency (MF) signals on trunks that handle coin calls. The Inband Coin Control Method feature provides the following coin control functions:

- Coin Collect
- Coin Return
- Ring-Back.

BC1147 - TOPS Expanded Inband Coin Control

Expanded Inband Coin Control is a signaling method that uses multifrequency (MF) signals to provide the following coin control functions:

- Coin Collect
- Coin Return
- Ring-Back
- Operator Released
- Operator Attached
- Coin Collect and Operator Released.

Expanded Inband Coin Control is not a modification to the Inband Coin Control method. Inband Coin Control remains unchanged and available for application.

BR0195 - Coin Control Method - Multiwink

The Multiwink Coin Control Method provides the following coin control functions for calls made from coin telephones:

- Coin Collect
- Coin Return
- Ring-Back

- Operator Released
- Operator Attached.

BR0087 - Coin Control Method - Line Number

The Line Number Coin Control Method provides the following coin control functions for calls made from coin telephones:

- Coin Collect
- Coin Return
- Ring-Back.

BV0306 - Flash Recall During Initial Period

The Flash Recall During Initial Period feature allows the calling party to recall the operator by flashing the switch-hook during the initial period.

BV0348 - Automatic Collection of Deposit on Release

The Automatic Collection of Deposit on Release feature sends Coin Collect requests at various stages of a TOPS coin call. The Coin Collect request is sent to the end office.

BR0337 - Variable Local Coin Charge

The Variable Local Coin Charge feature allows the Operating Company to assign a lower rate charge for local coin calls originating from institutions such as hospitals and schools.

F1112 - Variable Initial Period

The Variable Initial Period feature allows the Operating Company to define the initial and the overtime period and the charges associated with them for calls made from coin telephones.

AF0073 - TOPS Coin Supervision Signaling Option

The TOPS Coin Supervision Signaling Option feature allows the Operating Company to specify the delay between the receipt of the last calling digit on a coin call and the transmission of coin signals. The delay is specified on a trunk group basis. The TOPSCOIN table has been created for this purpose.

AL0418 - Coin First Return on Disconnect

The Coin First Return on Disconnect feature enhances coin control capability by sending a Coin Return signal or keypad enable signal only when required by the end office during a (1)-950-XXXX or 1-800-NXX-XXXX coin call. These enhancements prevent additional dial delay and consumption of real time caused by sending these unnecessary signals.

TOPS Call Processing Features (Coin) (continued)

Operation

Tables TRKGRP and TRKSGRP

The type of coin control method to be used on the trunks must be specified in the TRKSGRP table for both incoming and outgoing trunks. The Coin Control (CCONT) field of the TRKSGRP table allows the Operating Company to specify what type of coin control method to use on the trunks. The valid entries for this field are: Expanded Inband (EI), Inband (IB), Multiwink (MW), Line Number (LN), and none (NO). These methods are discussed in this document.

The Ring-Back (RNBACK) field of table TRKSGRP allows the Operating Company to define the type of Ring-Back that is to be used on the trunks. The valid entries for the RNBACK field are the same as those for the CCONT field. The entries in the CCONT and the RNBACK fields should normally to be the same, except in cases where the CCONT field is set LN; then the RNBACK field must also be set to LN. Refer to the data schema section of this document for further details on the TRKSGRP table.

BV0169 - Coin Control Method - Inband

Inband Coin Control is a signaling method that uses multifrequency (MF) signals on trunks that handle coin calls. The Inband Coin Control Method feature provides the following coin control functions:

- Coin Collect
- Coin Return
- Ring-Back.

Each coin control function is represented by a unique combination of two frequencies. Refer to the following table for the frequencies associated with each coin control function.

Inband Coin Control signals are MF signals that are sent in the voiceband to the end office. Each MF signal is associated with a specific digit. See the table below for the digit associated with each MF signal.

Inband coin control method specification

Function	MF digit	MF frequency (Hz)
Coin Collect	2	700 + 1100
Coin Return	13	1100 + 1700
Ring-Back	11	700 + 1700

TOPS Call Processing Features (Coin) (continued)

Each coin control signal is preceded by an on-hook wink and a post-wink delay. For example, if a Coin Collect function is required, the tandem sends the end office an on-hook wink, a post-wink delay, and the MF signal (in this case, a frequency of 700 + 1100 Hz for Coin Collect). Once the end office receives these three signals, it can apply the requested coin control function to the coin telephone line (the end office executes the Coin Collect function by applying a predefined voltage to the line).

The required duration for the on-hook wink, the post-wink delay, and the MF signal for Inband Coin Control is defined in the following exhibit:

Inband coin control timing specification

Interval	Duration
On-hook wink	70-130 ms
Post-wink delay	95-195 ms
MF signal	nominal 1000 ms

A guard interval is required between each coin control function. The guard interval gives the end office time to detect the signals sent by the tandem and to apply the requested function to the line. See the following figure for an example of call processing using the Inband Coin Control Method. This example assumes that the call is made from a CCF telephone and that the Automatic Coin Toll Service (ACTS) feature is not present in the office.

Note: If the calling party uses a CDF telephone, call processing is the same, except that the calling party receives dial tone before making a coin deposit.

TOPS Call Processing Features (Coin) (continued)

Call processing using Inband Method

CALLING PARTY	END OFFICE	TANDEM AND TOPS
1. Calling party goes off-hook and deposits coin.		
	2. EO returns dial tone.	
3. Calling party dials 1+ call.		
	4. EO sends message to tandem requesting operator.	
		5. A blind COIN RETURN signal is sent (see note), operator is attached, and the keypad is disabled. The COIN RETURN signal consists of: – on-hook wink – post-wink delay – MF signal (the MF is a combination of 1100 +1700 Hz).
		6. Operator informs calling party how much money to deposit for X number of minutes.
7. Calling party deposits money.		
		8. Operator acknowledges deposit and releases position, and a pad enable signal is sent for CDF phones.

TOPS Call Processing Features (Coin) (continued)

Call processing using Inband Method (continued)

CALLING PARTY	END OFFICE	TANDEM AND TOPS
		9. Five seconds before X number of minutes is up, the coins in the hopper are collected and the operator is reattached and notifies the calling party that X number of minutes is up. The COIN COLLECT signal consists of: – on-hook wink – post-wink delay – MF signal (the MF signal is a combination of 700 + 1100 Hz).
10. Calling party goes on-hook.		

Note: A blind Coin Return is sent only for CCF phones.

BC1147 - TOPS Expanded Inband Coin Control

Expanded Inband Coin Control is a signaling method that uses multifrequency (MF) signals to provide the following coin control functions:

- Coin Collect
- Coin Return
- Ring-Back
- Operator Released
- Operator Attached
- Coin Collect and Operator Released.

Expanded Inband Coin Control is not a modification to the Inband Coin Control Method. Inband Coin Control remains unchanged and available for application.

TOPS Call Processing Features (Coin) (continued)

Expanded Inband Coin Control is a method of signaling that uses multifrequency (MF) signals between the tandem and the end office for calls from coin telephones.

Expanded Inband Coin Control provides the following functions: Coin Collect, Coin Return, and Ring-Back. Unlike Inband Coin Control, Expanded Inband Coin Control also provides the following functions: Operator Released, Operator Attached, and Coin Collect and Operator Released.

The Expanded Inband Coin Control Method sends MF signals in the voiceband to the end office. The MF digit associated with each MF signal frequency identifies the particular function required. The following table provides the MF digit and the frequencies associated with each function.

Expanded Inband Coin Control Method specifications

Function	MF digit	MF frequency (Hz)
Operator Released	8	900 + 1500
Operator Attached	0	1300 + 1500
Coin Collect	2	700 + 1100
Coin Return	13	1100 + 1700
Ring-Back	11	700 + 1700
Coin Collect and Operator Released	15	1500 + 1700

Signaling for each coin control function (Operator Released, Operator Attached, Coin Collect, Coin Return, Ring-Back, and Coin Collect and Operator Released) is accomplished in the following way: The tandem sends an on-hook wink, followed by a post-wink delay, followed by the MF signal. The assumption in this example is that the call is made from a CDF telephone and that the ACTS feature is not present in the office.

Note: If the calling party uses a CCF telephone, call processing is done the same way, except that a coin deposit is required before dial tone is returned, and a blind Coin Return is done before connecting to an operator.

See the following table for the required duration of each signal.

Expanded Inband signaling timing specifications

Interval	Duration
On-hook wink	325-425 ms
Post-wink delay	770-850 ms
MF signal	480-700 ms

Once the coin control signal is sent, a guard interval is required before the next coin control signal can be sent. The guard interval gives the end office time to complete detection of the signal sent by the tandem and to apply the requested coin control function to the coin telephone before any more signals can be sent. See the following table for the Guard Interval duration required after each Expanded Inband Coin Control function.

The additional capabilities offered by the Expanded Inband Method (Operator Released and Operator Attached) are necessary for the Mechanized Calling Card Service (MCCS) feature to control the pad state.

The Operator Released and Operator Attached functions are also referred to as keypad controls. When an operator is attached to a coin call, the coin telephone keypad is disabled. When the operator is released, the coin telephone keypad is re-enabled. The ability to enable and disable the keypad is important for two reasons: One, to be able to provide such services as Mechanized Calling Card Service (MCCS) and, two, to prevent interference with or simulation of coin control tones.

Since the keypad must be disabled when an operator is attached, the end office normally connects a coin telephone to a TOPS outgoing trunk in the Operator Attached (keypad disabled) condition. However, with Expanded Inband Coin Control, the end office connects the coin telephone to a TOPS outgoing trunk in the Operator Released (keypad enabled) condition for 0+, 0-, and non-chargeable call originations. By connecting coin telephones in the Operator Released condition, the TOPS switch can provide the Mechanized Calling Card Service (MCCS) feature.

It is the responsibility of the end office to ensure that the keypad is in the proper state. With the advent of Equal Access (EA), a change in the routing procedure has resulted in calls that do not require operator assistance being connected with the keypad in the wrong state. With the advent of EA, calls are routed to an Access Tandem (AT) on TOPS trunks, instead of being routed to an Interexchange Carrier (IC). This had caused difficulty in enabling the keypad

TOPS Call Processing Features (Coin) (continued)

for certain types of calls, particularly for 800 and 950-WXXX (Feature Group B) type calls. Refer to Base TOPS Equal Access, OSEA0101, for more information on Equal Access and Feature Group B calls.

Because some end offices do not leave the keypads in the correct state, the AT is responsible for ensuring that the keypads are enabled when necessary. Therefore, a special Common Language Location Identifier (CLLI) has been created. This CLLI is TOPSCOINENABLE. It gives the Operating Company complete flexibility in enabling the keypads of coin telephones. Common Language Location Identifiers that perform Coin Collect, Coin Return and keypad disable functions are also available. These CLLI are: TOPSCOINCOLLECT, TOPSCOINRETURN, and TOPSCOINDISABLE.

Expanded Inband coin control guard intervals

Expanded inband function	Guard interval
Operator Released (keypad enabled)	600 ms
Operator Attached (keypad disabled)	600 ms
Coin Collect	2000 ms
Coin Return	2000 ms
Ring-Back	2000 ms
Coin Collect and Operator Released	2000 ms

TOPS Call Processing Features (Coin) (continued)

Call processing using the Expanded Inband Method

CALLING PARTY	END OFFICE	TANDEM AND TOPS
1. Calling party goes off-hook.		
	2. EO returns dial tone.	
3. Calling party dials 0– call.		
	4. EO sends message to tandem requesting operator.	
		5. Tandem attaches operator and sends OPERATOR ATTACHED signal to EO. OPERATOR ATTACHED signal consists of: – on-hook wink – post-wink delay – MF signal (the MF is a combination of 1300 +1500 Hz).
	6. EO receives Operator Attached and disables keypad using electrical signals applied to Tip/ Ring of the coin telephone.	
7. Customer connected through voicepath to operator and makes collect call.		
		8. Operator completes call and releases TOPS position.

TOPS Call Processing Features (Coin) (continued)

Call processing using the Expanded Inband Method (continued)

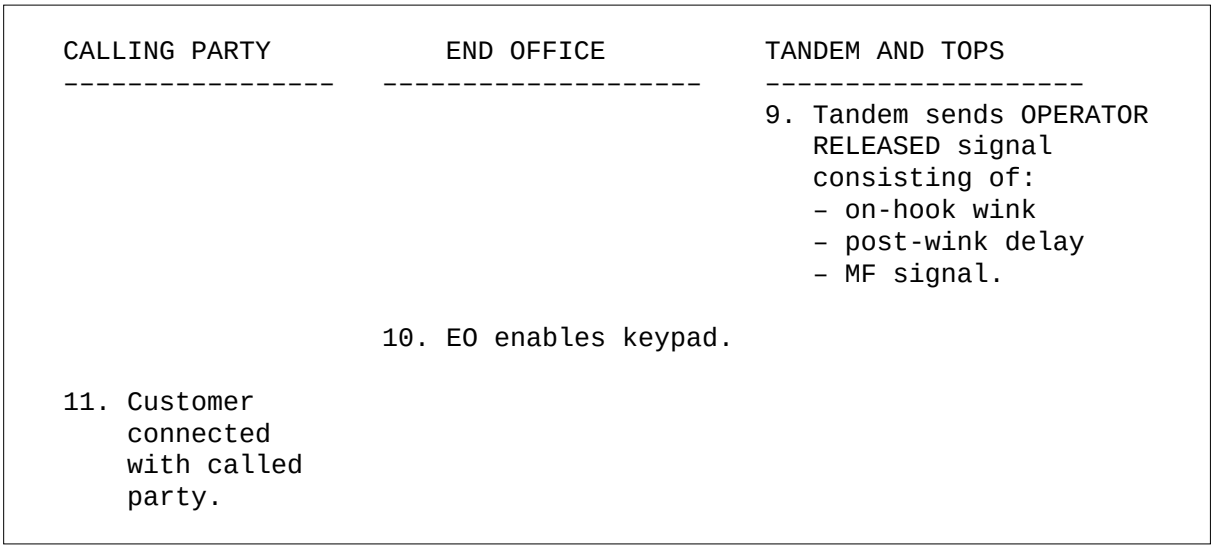

Office parameters

The EXPANDED_INBAND_PERMITTED office parameter must be set to Y for Expanded Inband Coin Control to work.

This parameter is required if the switching unit supports outgoing OP trunks. This parameter also specifies whether or not the Expanded Inband Coin Control Method is available for Coin Control. The valid entries for this parameter are Y and N. If an entry is not specified, the default value is N. Refer to *Office Parameters Reference Manual*, for further details on the EXPANDED_INBAND_PERMITTED parameter.

Data tables

With the advent of Equal Access (see Base TOPS Equal Access, OSEA0101), the Access Tandem must be capable of enabling the keypad on coin calls that do not require operator assistance. The Common Language Location Identifier (CLLI) TOPSCOINENABLE gives the Access Tandem this capability. (Refer to the CLLI table in the data schema section of this document for further details on the Common Language Location Identifiers.)

To use TOPSCOINENABLE, the Operating Company must place this CLLI at the beginning of a route list. The route list routes the call to an Interexchange Carrier (IC).

The following example shows sample datafill for table OFRT, using TOPSCOINENABLE CLLI.

TOPS Call Processing Features (Coin) (continued)

MAP display example for table OFRT, using TOPSCOINENABLE CLLI

```
  RTE                                    RTELIST
-------------------------------------------------
999 ( S D TOPSCOINENABLE) (N D OGEACAR1 0 N N)
```

The above figure shows a route list that could be datafilled in the OFRT table. In this example, a call is routed on trunk group OGEACAR1. A keypad enable signal is sent to enable the keypad for all coin calls that use this route list.

After the coin signal has been sent, the call is routed to trunk group OGEACAR1. If the coin call originated from an end office that left the key pad in the correct state, then calls from those end offices could route to a different route list that did not include the TOPSCOINENABLE CLLI.

In cases where the CLLI must be used, the Route Selector (RTESEL) field of table OFRT must be set to S. The route selector S must be used when the outgoing or 2-way trunk group is an intertoll (or interoffice) trunk and standard digit manipulation is required.

Three more CLLIs are available for calls that do not route to an operator. These CLLIs are TOPSCOINDISABLE, TOPSCOINCOLLECT, and TOPSCOINRETURN. They also must be datafilled in the beginning of a route list. If more than one coin control function is required, more than one CLLI can be added to the route list. Refer to the data schema section of this document and to Base TOPS Equal Access, OSEA0101, for details on table OFRT. Refer to the data schema section of this document for details on table CLLI.

These CLLI can only be used for calls that originate on TOPS trunks and are not completed by a TOPS operator. These CLLIs can also be used for CAMA calls that route to a TOPS operator and for calls that are transferred to an Interexchange Carrier operator service, since neither of these calls are completed by the TOPS operator.

Each coin control CLLI added to the route list adds approximately three seconds of post delay to each coin call using the route list.

TOPS Call Processing Features (Coin) (continued)

BR0195 - Coin Control Method - Multiwink

The Multiwink Coin Control Method provides the following coin control functions for calls made from coin telephones:

- Coin Collect
- Coin Return
- Ring-Back
- Operator Released
- Operator Attached.

Multiwink Coin Control is a method of coin control that uses multiple on-hook winks on trunks handling coin calls. The tandem sends multiwink coin control signals to the end office when the TOPS operator requests coin control functions.

The coin control functions provided by the Multiwink Coin Control Method are as follows: Coin Collect, Coin Return, Ring-Back, Operator Released, and Operator Attached. Each coin control function is represented by a unique number of winks. The number of winks sent to the end office identifies the particular function required. See the following table for details on the number of winks associated with each coin control function.

The duration of each wink is 70-130 milliseconds. The winks is 100-150 milliseconds apart. After sending all of the required winks for the requested coin control function (e.g., three winks for Coin Collect), a guard interval is required before more coin control requests can be sent. The guard interval gives the end office time to detect all of the winks (e.g., 4 winks for a Coin Return) sent by the tandem and to apply the requested coin control function to the coin telephone. See the following table for details on the required guard interval for each coin control function.

Multiwink coin control method specifications

Winks	Coin control function	Guard interval
1	Operator Released	500 ms
2	Operator Attached	500 ms
3	Coin Collect	1.1 sec
4	Coin Return	1.1 sec
5	Ring-Back	2.4 sec

TOPS Call Processing Features (Coin) (continued)

BR0087 - Coin Control Method - Line Number

The Line Number Coin Control Method provides Coin Collect, Coin Return, and Ring-Back coin control functions. When the Line Number method is used, special codes are inserted between the NXX and XXXX number of the coin station.

The Operating Company can define special codes to represent each coin control function. These codes are specified in table LNCODE. Refer to the data schema section of this document for details on table LNCODE.

The NXX may be deleted as directed by translation when a direct toll connecting trunk is used or outpulsed from the tandem if an indirect route is selected.

The special code is inserted into the coin station directory number (NXX-XXXX) by the DMS (or tandem) switch upon receipt of coin control requests from the TOPS operator and sent to the end office. The following figure gives an example of call processing using the Line Number Method of coin control. In this example, 12 represents the special code for a Coin Collect function and 17 represents the special code for a Coin Return function. This example assumes that the call is made from a CDF telephone and that the ACTS feature is not present in the office.

TOPS Call Processing Features (Coin) (continued)

Call processing using the Line Number Method

CALLING PARTY	END OFFICE	TANDEM AND TOPS
1. Calling party goes off-hook.		
	2. EO returns dial tone.	
3. Calling party deposits coin for CCF and dials 1+XXX+XXXX.		
	4. EO sends message to tandem requesting operator.	
		5. Tandem attaches operator and sends COIN RETURN (NXX–17–XXXX). Operator informs customer how money to deposit for X number of minutes.
6. Customer deposits money.		
		7. Operator makes connection to called party and releases position.
		8. Five seconds before X number of minutes is up, the operator notifies the customer of the time.
9. Customer ends call and goes on-hook.		

Data tables

The specifications for the BR0087 feature are outlined in the Line Number Method of Coin Control (LNCODE) table. The LNCODE table lists the special code associated with each coin control function provided by the Line Number Method of coin control. Refer to the data schema section of this document for further details on the LNCODE table. Refer to the following figure for example datafill for table LNCODE.

MAP display example for table LNCODE

```
SNPA     COINCOL     COINRET     RERING
---------------------------------------
613        12           17          5
```

In the preceding figure, SNPA, COINCOL, COINRET, and RERING represent the fields in table LNCODE. In this example, the special codes 12, 17, and 5 apply to the serving Numbering Plan Area (NPA). For example, if 613-NXX-12-XXXX were outpulsed from the Access Tandem towards the local end office, it would indicate to the local end office that a Coin Collect is required.

BV0306 - Flash Recall During Initial Period

The Flash Recall During Initial Period feature allows the calling party to recall the operator if there is any trouble with the call (e.g., wrong number, no ring, or noise on line).

The calling party recalls the operator by pressing the switch-hook once during the initial period. The operator is reconnected to the coin telephone, and the calling party reports the trouble. The operator cancels the timing and reestablishes the call. The initial period begins again.

The initial period is defined by the Operating Company and is datafilled in table CHARGE. Refer to the data schema section of this document for more information on table CHARGE.

Data tables

Refer to F1112 - Variable Initial Period, for details on the definition of initial period.

BV0348 - Automatic Collection of Deposit on Release

The Automatic Collection of Deposit on Release feature sends Coin Collect requests at various stages of a TOPS coin call. The Coin Collect request is sent to the end office.

TOPS Call Processing Features (Coin) (continued)

For offices having BCS19 and subsequent software loads, the points at which Coin Collect requests are sent has been modified. In the following paragraphs, points of Coin Collect prior to BCS19 and points of Coin Collect for BCS19 and greater are both discussed.

The following terms are used in reference to Coin Collect:

- INP - Initial Period. INP defines the amount of time for which the calling party initially pays.
- CIRP - Coin Initial Recall Period. CIRP is the amount of time from the beginning of the coin call to the first recall to the TOPS operator.
- CRP - Coin Recall Period. CRP is the amount of time after being recalled to the TOPS operator at the end of the CIRP that the telephone conversation is permitted to continue before being recalled to the operator again.

CIRP can equal INP, but a common practice is to have the INP equal one minute and the CIRP equal 3 minutes. On a coin call, the calling party would pay for the INP period, regardless of the duration of the call. In cases where the call duration is greater than the CIRP, the operator is reconnected to the coin telephone at the end of the CIRP and requests that the calling party pay for two minutes of overtime. The way that the rest of the call is handled depends on a the factors discussed in the following paragraphs.

Prior to BCS19, Coin Collects were done at the following stages of a call:

- At the end of CIRP
- At the end of each subsequent CRP
- At the end of the call when the calling party is recalled to the TOPS operator for collection of overtime charges.

For BCS19 and greater, the stages at which Coin Collects are done has been changed. The points at which Coin Collects are done depends on the value of the TOPS_ACTS parameter in table OFCENG. The TOPS_ACTS parameter can either be set to Y or N. If the parameter is set to Y, then the Automatic Coin Toll Service (ACTS) feature is active in the office. The ACTS feature allows 1+ calls, dialed from coin telephones, to complete successfully without operator intervention. Announcements for coin deposit requests are provided by a Digital Recorded Announcement Machine (DRAM). If the parameter is set to N, then either the ACTS feature is not active or it does not exist in the office. Refer to Automatic Coin Toll Service, ENSV0102, for further details on the ACTS feature.

If the TOPS_ACTS parameter in table OFCENG is set to Y, Coin Collects are done at the following stages:

- At the end of the INP
- At the beginning of each subsequent CRP after the calling party has deposited money for a previous CRP
- At the end of the call when the calling party is recalled to ACTS for collection of overtime charges.

If the TOPS_ACTS parameter in table OFCENG is set to N, or if the ACTS feature is not present in the office, Coin Collects are done at the following stages:

- At the end of the CIRP
- At the beginning of each subsequent CRP after the calling party has deposited money for the previous CRP
- At the end of the call when the calling party is recalled to the TOPS operator for collection of overtime charges.

The INP is defined in table CHARGE and the CRP and the CIRP are defined in table SCHED. Refer to the data schema section of this document for more information on the CHARGE and SCHED tables.

Office parameters

The TOPS_ACTS parameter specifies whether or not the Automatic Coin Toll Service (ACTS) feature is active in the office. If the ACTS feature is active, the stages at which Coin Collects are done change.

The valid entries for the TOPS_ACTS parameter are Y and N. If the parameter is set to N, the feature is not active. If the parameter is set to Y, the feature is active and affects the stages at which Coin Collect signals are sent. Refer to the *Office Parameters Reference Manual* for further details on the TOPS_ACTS parameter.

BR0337 - Variable Local Coin Charge

The Variable Local Coin Charge feature allows the Operating Company to assign standard and nonstandard local rate steps for each tariff in the TOPS serving area. Prior to BCS9, only one rate schedule containing the local rate step could be assigned to a tariff. With the Variable Local Coin Charge feature, more than one schedule and rate step can be assigned to a tariff.

The selection of the rate step depends on where the call is made, the type of telephone used, and the originating number.

TOPS Call Processing Features (Coin) (continued)

One application of this feature is for local call originating from coin stations located at schools or hospitals. Calls originating from coin stations in such places can be charged a lower rate than would normally be charged for coin stations. For example, a call made from a coin telephone at a school may require only a $.10 deposit, instead of the standard $.25 deposit required elsewhere. Refer to the data schema section of this document for more information on TOPS rating.

All originating numbers that are subject to a lower rate step must be defined in table SPLDNID. Table LCLRS defines the schedule and the rate step applicable to each originating number. Refer to the data schema section of this document for more information on, and sample datafill for, tables SPLDNID and LCLRS. Refer to the data schema section of this document for example datafill for these two tables.

Data tables

With BR0337, the Operating Company can assign a standard and a nonstandard local rate step to a tariff. Prior to BCS19, only one local rate step could be associated with each tariff. This added feature results in the modification of tables LCLRS and SPLDNID. Key field LC_TYPE is added to table LCLRS. In table SPLDNID, value COIN in field SPLSEL is added and new field LC_TYPE is added.

The following two examples show sample datafill for tables LCLRS and SPLDNID.

MAP display example for table LCLRS

```
     TARIFF     LC_TYPE     SCHNAME     RATESTEP
     ----------------------------------------
     BELLONT      STD         LOCAL        350
     BELLONT      SPL         LOCAL        345
```

MAP display example for table SPLDNID

```
 SPLDN          SPLSEL
------------    ------------------------------------------
                                ACTS_
                SEL  LC_TYPE  COMPATIBLE  RESCOIN  RBILCLAS
                ------------------------------------------
 4163852411     COIN    STD     NOACTS        N       100
 4163852211     COIN    SPL     ACTS          Y       0
```

In the above figure for table LCLRS, BELLONT is the name of the tariff to which the originating NPA-NXX belongs (this name must also be known to table TARIFF). STD and SPL are the local schedule types. LOCAL represents the local schedule name (this name must also be known to table SCHED). Number 350 and 345 represent the rate step assigned to the local schedule (the range for the rate step is specified in table SCHED for the local schedule specified in field SCHNAME of table LCLRS).

In the example given here for table LCLRS, tariff BELLONT has two local schedules. One of the local schedules is standard (STD) and the other is nonstandard (SPL). The nonstandard schedule also has a lower rate step, meaning that certain station class calls (e.g., coin calls from a school) originating within the same NPA-NXX are charged less.

In the above figure for table SPLDNID, SPLDN represents the special directory number - in this case, 4163852411. The entry in the SEL field represents the type of device associated with the special directory number - in this case, the device is a coin telephone. The LC_TYPE field defines the type of schedule and rate step associated with this number (this entry is the same as the entry in table LCLRS). The ACTS_COMPATIBLE field indicates whether or not the coin telephone is compatible with the ACTS feature. The RESCOIN field indicates whether the coin telephone is subject to restricted billing. And the RBILCLAS field defines the type of restricted billing that applies to the coin telephone.

Table SPLDNID and table LCLRS work in conjunction. For example, assume that a call is made from a coin telephone (SEL) and the number of that coin phone is 4163852411 (SPLDN). The schedule name and rate step associated with that number is STD (LC_TYPE). Several other tables are checked to determine what tariff, schedule, and rate step associated with 4163852411. All this information is indexed into table LCLRS. Once the information is datafilled into table LCLRS, it can be determined whether the calling number is to be charged the regular (standard) rate or a lower (nonstandard) rate. In this example, 4163852411 is assigned to the BELLONT tariff and is subject to a standard rate step - in this case, 350 (refer to the data schema section of this document for further details on the TOPS rating system). Similarly, in the second example (4163852211), a call originating within the same NPA-NXX and assigned to the same tariff is subject to a nonstandard rate step - in this case, 345.

F1112 - Variable Initial Period

The Operating Company can define its own initial and overtime periods and the charges associated with them for calls made from coin telephones.

TOPS Call Processing Features (Coin) (continued)

This feature is used for coin calls that are routed to the TOPS operator or to ACTS for quotation of charges and collection of deposit.

The initial and overtime period and the initial and overtime deposit are defined in table CHARGE.

Collection of deposit for initial period (without ACTS)

CALLING PARTY	OPERATOR ACTION
1. Calling party dials a 1+ call.	
	2. Operator asks calling party to deposit z1.25 for the first minute (initial deposit and period).
3. Calling party deposits $1.25.	
	4. When AMT DUE displays 0, the call is outpulsed, and the operator releases the position.
5. Calling party is connected with called party.	
	6. Five seconds before the initial period is up, the coins are collected, and the calling party is reconnected to the operator. The calling party is informed that one minute is up and to indicate when through.
7. Calling party ends conversation and goes on-hook.	

TOPS Call Processing Features (Coin) (continued)

Collection of deposit for initial period (with ACTS)

CALLING PARTY	ACTS
1. Calling party dials a 1+ call.	
	2. A recorded announcement informs the calling party to deposit z1.25 for the first minute.
3. Calling party deposits $1.25.	
	4. Deposit is acknowledged by a recorded “Thank you.”
5. Calling party is connected with called party.	
	6. Five seconds before the initial period is up, the coins are collected, and a recorded announcement informs the calling party that the minute is up and to indicate when through.
7. Calling party ends conversation and goes on-hook.	

Data tables

The initial and overtime period and the initial and overtime charge are defined in the CHARGE table.

The CHARGE table also lists all the unique combinations of charges for each rate step associated with the charge tables for each rate schedule. Refer to the data schema section of this document for further details.

The following example shows sample datafill for table CHARGE.

TOPS Call Processing Features (Coin) (continued)

MAP display example for table CHARGE

```
    CHGKEY
----------------------------
 SCHNAME     CHGTAB  RATESTEP  CLCHG  INP  IC  OVTI  OVTC
--------------------------- ---------------------------
 SAMPLESCH   STA         18       0     3  30    1     5
```

In the above figure, SAMPLESCH is the name of the rate schedule, which is indexed from the SCHED table. STA is the name of the charge table. Eighteen (18) is the rate step for charge table STA. Zero (0) represents the class charge (in cents) for operator handled calls (see note below). Three (3) represents the initial period in minutes. Thirty (30) represents the initial charge in cents. One (1) represents the overtime interval in minutes. Five (5) represents the overtime charge in cents.

Note: Normally, on operator handled calls, the initial period charge includes the cost for operator assistance. Table CHARGE allows the Operating Company to specify a charge for operator assistance separately.

AF0073 - TOPS Coin Supervision Signaling Option

Prior to this feature, the delay between the receipt of the last calling digit and the transmission of a coin signal by the TOPS office was fixed at 750 milliseconds. This posed problems for those offices with #5XB coin trunks because they could not release their sender in time to receive the coin signal.

This feature allows the Operating Company to specify the delay between the receipt of the last calling digit and the transmission of the coin control signal, on a trunk group basis. This is done through table control. The TOPSCOIN table is created by this feature for that purpose.

As a result of this feature, the PADSTAT0, the PADSTAT1, and the COINTYPE fields are deleted from the TRKGRP table. These three fields are now part of the TOPSCOIN table. The advantage of having these three fields in a separate table is that entries can now be made only if the values needed are different from the default values. It also eliminates the need to datafill coin parameters for trunk groups that do not carry coin traffic.

Data tables

The TOPS Coin Supervision Signaling Option feature creates the TOPSCOIN table. This table allows the Operating Company to define the delay between the reception of the last calling digit and the transmission of coin signals on 0+, 0-, and 1+ coin calls.

The feature also deletes the PADSTAT0, the PADSTAT1, and the COINTYPE fields from the TRKGRP table. These fields are now part of the TOPSCOIN table. Following is example datafill.

MAP display example for table TOPSCOIN

```
GRPKEY  CNSDELAY  PADSTAT0  PADSTAT1  COINTYPE  CCFCNRET
PADSTATB  PADSTAT8
------------------------------------------------------
TOPS1      75     ENABLED   DISABLED     CCF       Y
DISABLED  ENABLED
```

AL0418 - Coin First Return on Disconnect

The Coin First Return on Disconnect feature enhances coin control capability by sending a Coin Return signal or keypad enable signal only when required by the end office during a (1)-950-XXXX or 1-800-NXX-XXXX coin call. These enhancements prevent additional dial delay and consumption of real time caused by sending these unnecessary signals.

In order to allow the keypad to remain enabled during a customer dialed 1-800 or (1)-950 coin call, modifications have been made to call processing on both CCF and CDF phones.

Since CCF and CDF phones operate differently, this feature is implemented differently for both types.

CCF coin phones

Currently, in order for a CCF phone keypad to remain enabled during a (1)-950 or 1-800 coin call, the coin deposit is not returned after the initial dialing is complete. Since some end offices have not been modified to return the deposit after call termination, this feature sends a Coin Return signal to return the deposit after a (1)-950 or 1-800 coin call is terminated. Since some end offices can return the deposit without receiving the Coin Return signal, this feature also allows the Operating Company craftsperson to specify, through datafill, whether or not sending the Coin Return signal is necessary.

To activate this feature, the Operating Company must route the calls to a TOPS Access Tandem over a TOPS trunk group. A new parameter in table TOPSCOIN, CCFCNET allows the end office to specify whether or not a Coin Return signal should be sent. If CCFCNET is set to Y, a Coin Return signal is sent after termination of a 1-800 or (1)-950 call, and the initial deposit is returned. If it is set to N, a Coin Return signal is not sent, because the end office is able to return the initial deposit without being prompted.

TOPS Call Processing Features (Coin) (continued)

It is only possible to set CCFCNRET to Y if the COINTYPE field in table TOPSCOIN is set to CCF or CCFCDF. There is no need for a Coin Return if the trunk serves only CDF phones.

CDF coin phones

Currently, to enable the DTMF keypad after initial dialing for 1-800 and (1)-950 coin calls, the Operating Company must route these calls to a TOPS access tandem on a TOPS trunk and ensure that calls are routed to an outgoing route list containing the TOPSCOINENABLE CLLI.

When the TOPSCOINENABLE CLLI is specified in the route list, a pad enable signal is sent to the originating end office. The end office then enables the DTMF keypad on the coin phone. Once the signaling is complete, the calling party is connected to an outgoing trunk.

Even if the end office leaves the keypad enabled without any special signaling, the presence of the TOPSCOINENABLE CLLI forces a pad enable signal to be sent.

This feature allows the end office to determine when the pad enable signal should be sent by datafilling two new pad state variables, PADSTATB and PADSTAT8 in table TOPSCOIN. Table TOPSCOIN provides the software with the ability to know the state of the DTMF keypad. PADSTATB informs the TOPS software of the initial state of the DTMF keypad on (1)-950 calls. PADSTAT8 informs the TOPS software of the initial state of the DTMF pad on 1-800 calls.

The new pad state fields can be set to UNKNOWN, ENABLED, or DISABLED. If the value of the pad state field is ENABLED, a pad enable signal is not sent; and if the keypad state is either DISABLED or UNKNOWN, a pad state enable signal is sent. Sending the pad enable signals only when required by the end office eliminates the post-dial delay and unnecessary real time consumption encountered on these calls prior to this feature.

Data tables

The Coin First Return on Disconnect feature creates three new fields in table TOPSCOIN to allow the Operating Company to specify whether a Coin Return signal or pad enable signal should be sent on 1-800 or (1)-950 coin calls. These new fields are CCFCNRET, PADSTATB, and PADSTAT8.

Translations table flow

The TOPS Call Processing Features (Coin) translation process is shown in the flowchart that follows.

TOPS Call Processing Features (Coin) (continued)

Table flow for TOPS Call Processing Features (Coin)

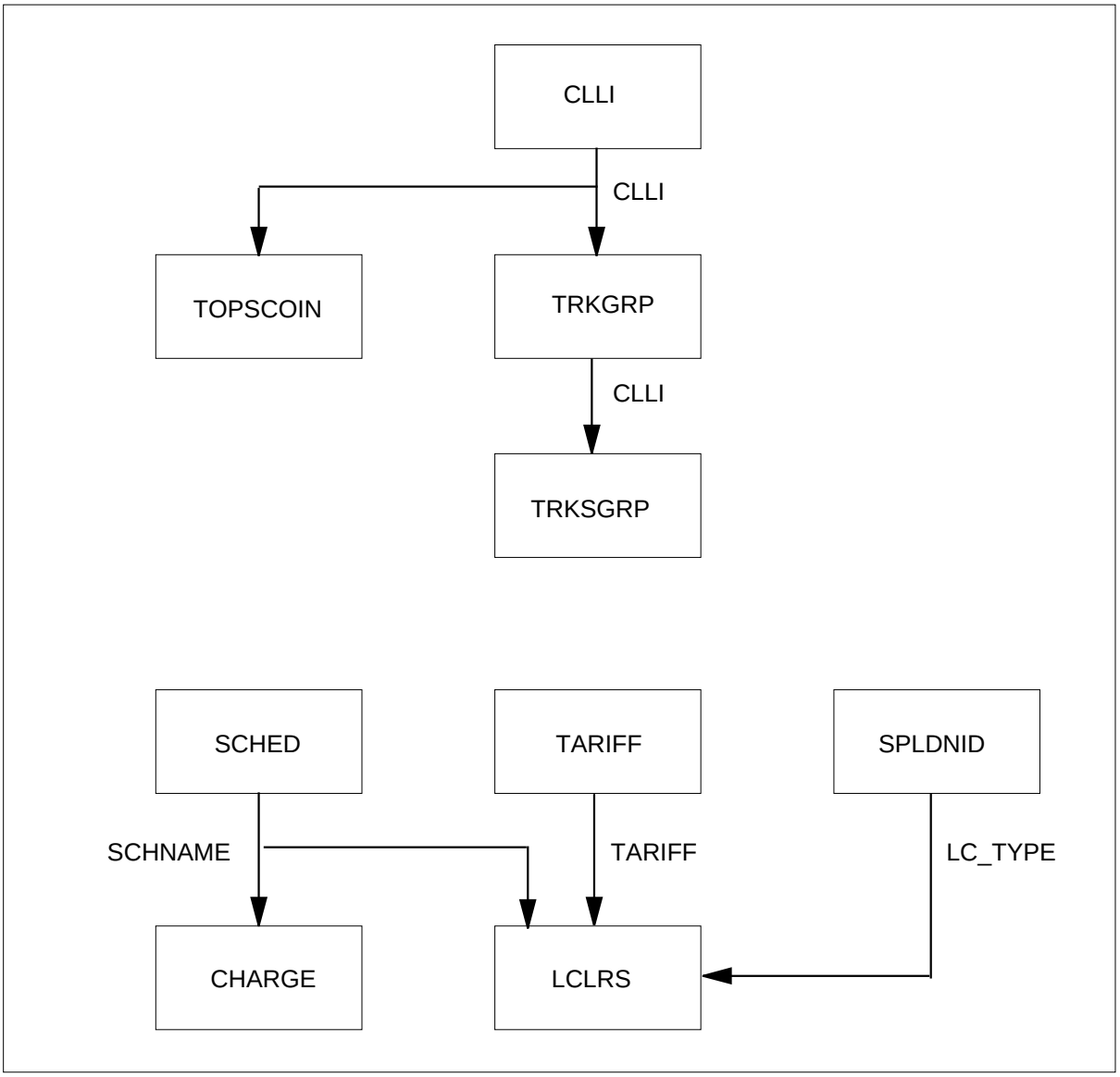

Limitations and restrictions

The following limitations and restrictions apply to TOPS Call Processing Features (Coin):

BC1147 - TOPS Expanded Inband Coin Control

The end office cannot apply the Operator Released and Operator Attached functions to coin telephones that are Coin Coin-First (CCF). With CCF phones, the keypad is enabled only by the presence of an initial deposit that is equal to the initial charge. The collection or the return of the coin deposit

TOPS Call Processing Features (Coin) (continued)

disables the keypad. Therefore, the use of the Expanded Inband Coin Control Method does not offer any advantages over the Inband Coin Control Method, unless the coin telephone is a Coin Dial Tone-First (CDF) telephone.

BR0087 - Coin Control Method - Line Number

Although the Line Number Method is available, it is not recommended. It is a very slow method method of coin control when compared to the other available methods and makes very inefficient use of operator and company time.

AF0073 - TOPS Coin Supervision Signaling Option

The Operating Company cannot specify a delay that is longer than 2 seconds (2000 milliseconds).

AL0418 - Coin First Return on Disconnect

The deposit is returned only at the end of a (1)-950-WXXX or 1-800-NXX-XXXX coin call only if the call arrives at a TOPS Access Tandem on a TOPS trunk that connects to an Access to Carrier (ATC) trunk.

A pad enable signal is only sent at the beginning of a (1)-950-WXXX or a 1-800-NXX-XXXX coin call if the call arrives at a TOPS Access Tandem on a TOPS trunk and then routes using the TOPS CLLI TOPSCOINENABLE.

The coin processing described in this feature only occurs on trunk to trunk, non-operator-handled calls.

Interactions

The following paragraphs describe the interactions between TOPS Call Processing Features (Coin) and other functionalities.

AL0418 - Coin First Return on Disconnect

If a coin call not dialed (1)-950-WXXX or 1-800-NXX-XXXX encounters the TOPCOINENABLE CLLI, the pad state indicated by the PADSTAT8 field of table TOPSCOIN is assumed.

The new pad state fields (PADSTAT8 and PADSTATB) take precedence over the PADSTAT0 and PADSTAT1 fields. Prior to this feature, a 1-800 call from a coin phone would use the value in the PADSTAT1 field. This feature forces the call to use the value in the PADSTAT8 field.

This feature will work with the E800 feature.

Activation/deactivation by the end user

TOPS Call Processing Features (Coin) requires no activation or deactivation by the end user.

TOPS Call Processing Features (Coin) (continued)

Billing

TOPS Call Processing Features (Coin) does not affect billing.

Station Message Detail Recording

TOPS Call Processing Features (Coin) does not affect Station Message Detail Recording.

Datafilling office parameters

The following table shows the office parameters used by TOPS Call Processing Features (Coin). For more information about office parameters, refer to *Office Parameters Reference Manual*.

Office parameters used by TOPS Call Processing Features (Coin)

Table name	Parameter name	Explanation and action
OFCOPT	EXPANDED_INBAND_PERMITTED	The EXPANDED_INBAND_PERMITTED office parameter must be set to Y for Expanded Inband Coin Control to work. This parameter is required if switching unit supports outgoing OP trunks. It also specifies whether or not the Expanded Inband Coin Control Method is available for coin control. The valid entries for this parameter are Y and N. If an entry is not specified, the default value is N.
OFCENG	TOPS_ACTS	The TOPS_ACTS parameter specifies whether or not the Automatic Coin Toll Service (ACTS) feature is active in the office. If the ACTS feature is active, the stages at which Coin Collects are done change. The valid entries for the TOPS_ACTS parameter are Y and N. If the parameter is set to N, the feature is not active. If the parameter is set to Y, the feature is active and affects the stages at which Coin Collect signals are sent. Refer to *Office Parameters Reference Manual*, for further details on the TOPS_ACTS parameter.

TOPS Call Processing Features (Coin) (continued)

Datafill sequence

The following table lists the tables that require datafill to implement TOPS Call Processing Features (Coin). The tables are listed in the order in which they are to be datafilled.

Datafill tables required for TOPS Call Processing Features (Coin)

Table	Purpose of table
CLLI	Common Language Location Identifier. This table is used to uniquely identify the far end of each announcement, tone, trunk group, test trunk, national milliwatt test lines, and service circuit.
TRKGRP	Trunk Group.
TRKSGRP	Trunk Subgroup. This table contains information about each subgroup associated with a trunk group defined in table TRKGRP.
CHARGE	TOPS Charge.
LCLRS	TOPS Calling Tariff to Local Rate Step.
SPLDNID	TOPS Special Directory Number ID table
LNCODE	TOPS Line Number Method of Coin Control.
TOPSCOIN	TOPS Coin.

Datafilling table CLLI

The following table shows the datafill specific to TOPS Call Processing Features (Coin) for table CLLI. Only those fields that apply directly to TOPS Call Processing Features (Coin) are shown. For a description of the other fields, refer to the data schema section of this document.

Datafilling table CLLI

Field	Subfield or refinement	Entry	Explanation and action
CLLI		TOPSCOINENABLE	Datafill these CLLIs.
		TOPSCOINDISABLE	
		TOPSCOINCOLLECT	
		TOPSCOINRETURN	

Datafill example for table OFRT, using TOPSCOINENABLE CLLI

The following example shows sample datafill for table OFRT, using TOPSCOINENABLE CLLI.

MAP display example for table OFRT, using TOPSCOINENABLE CLLI

```
  RTE                                    RTELIST
-------------------------------------------------
999 ( S D TOPSCOINENABLE) (N D OGEACAR1 0 N N)
```

Datafilling tables TRKGRP

The following table shows the datafill specific to TOPS Call Processing Features (Coin) for table TRKGRP. Only those fields that apply directly to TOPS Call Processing Features (Coin) are shown. For a description of the other fields, refer to the data schema section of this document.

Datafilling table TRKGRP

Field	Subfield or refinement	Entry	Explanation and action
			The feature also deletes the PADSTAT0, PADSTAT1, and COINTYPE fields from the TRKGRP table. These fields are now part of the TOPSCOIN table.

Datafilling table TRKSGRP

The following table shows the datafill specific to TOPS Call Processing Features (Coin) for table TRKSGRP. Only those fields that apply directly to

TOPS Call Processing Features (Coin) (continued)

TOPS Call Processing Features (Coin) are shown. For a description of the other fields, refer to the data schema section of this document.

Datafilling table TRKSGRP

Field	Subfield or refinement	Entry	Explanation and action
CCONT		EI, IB, MW, LN, NO	The type of coin control method to be used on the trunks must be specified in the TRKSGRP table for both incoming and outgoing trunks. The Coin Control (CCONT) field of the TRKSGRP table allows the Operating Company to specify what type of coin control method is to be used on the trunks. The valid entries for this field are Expanded Inband (EI), Inband (IB), Multiwink (MW), Line Number (LN), and none (NO).
RNBACK		EI, IB, MW, LN, NO	The Ring-Back (RNBACK) field of table TRKSGRP allows the Operating Company to define the type of Ring-Back that is to be used on the trunks. The valid entries for the RNBACK field are the same as those for the CCONT field. The entries in the CCONT and the RNBACK fields should normally to be the same, except in cases where the CCONT field is set to LN; then the RNBACK field must also be set to LN.

Datafilling table CHARGE

The initial and overtime period and the initial and overtime charge are defined in the CHARGE table.

The CHARGE table also lists all the unique combinations of charges for each rate step associated with the charge tables for each rate schedule.

Datafill example for table CHARGE

The following example shows sample datafill for table CHARGE.

MAP display example for table CHARGE

```
    CHGKEY
----------------------------
 SCHNAME     CHGTAB  RATESTEP  CLCHG  INP  IC  OVTI  OVTC
---------------------------- ----------------------------
 SAMPLESCH   STA         18       0     3  30    1     5
```

In the above figure, SAMPLESCH is the name of the rate schedule, which is indexed from the SCHED table. STA is the name of the charge table. Eighteen (18) is the rate step for charge table STA. Zero (0) represents the class charge (in cents) for operator handled calls (see note below). Three (3) represents the initial period in minutes. Thirty (30) represents the initial charge in cents. One (1) represents the overtime interval in minutes. Five (5) represents the overtime charge in cents.

Note: Normally, on operator handled calls, the initial period charge includes the cost for operator assistance. Table CHARGE allows the Operating Company to specify a charge for operator assistance separately. Refer to the data schema section of this document for further details.

Datafilling table LCLRS

Key field LC_TYPE is added to table LCLRS.

The following table shows the datafill specific to TOPS Call Processing Features (Coin) for table LCLRS. Only those fields that apply directly to TOPS Call Processing Features (Coin) are shown. For a description of the other fields, refer to the data schema section of this document.

Datafilling table LCLRS

Field	Subfield or refinement	Entry	Explanation and action
LC_TYPE		SPL, STD	Local type.

Datafill example for table LCLRS

The following example shows sample datafill for table LCLRS.

MAP display example for table LCLRS

```
TARIFF     LC_TYPE     SCHNAME     RATESTEP
-----------------------------------------
BELLONT      STD         LOCAL        350
BELLONT      SPL         LOCAL        345
```

Datafilling table SPLDNID

In table SPLDNID, value COIN in field SPLSEL is added and new field LC_TYPE is added.

The following table shows the datafill specific to TOPS Call Processing Features (Coin) for table SPLDNID. Only those fields that apply directly to

TOPS Call Processing Features (Coin) (continued)

TOPS Call Processing Features (Coin) are shown. For a description of the other fields, refer to the data schema section of this document.

Datafilling table SPLDNID

Field	Subfield or refinement	Entry	Explanation and action
SPLSEL		COIN	New value COIN is added.
LC_TYPE		SPL, STD	Local type.

Datafill example for table SPLDNID

The following example shows sample datafill for table SPLDNID.

MAP display example for table SPLDNID

```
 SPLDN          SPLSEL
------------    ----------------------------------------
                                ACTS_
                SEL   LC_TYPE   COMPATIBLE   RESCOIN   RBILCLAS
                ----------------------------------------
 4163852411     COIN    STD      NOACTS         N        100
 4163852211     COIN    SPL      ACTS           Y        0
```

In the above figure for table LCLRS, BELLONT is the name of the tariff to which the originating NPA-NXX belongs (this name must also be known to table TARIFF). STD and SPL are the local schedule types. LOCAL represents the local schedule name (this name must also be known to table SCHED). Numbers 350 and 345 represent the rate step assigned to the local schedule (the range for the rate step is specified in table SCHED for the local schedule specified in field SCHNAME of table LCLRS).

In the example given here for table LCLRS, tariff BELLONT has two local schedules. One of the local schedules is standard (STD) and the other is nonstandard (SPL). The nonstandard schedule also has a lower rate step, meaning that certain station class calls (e.g., coin calls from a school) originating within the same NPA-NXX are charged less.

In the above figure for table SPLDNID, SPLDN represents the special directory number - in this case, 4163852411. The entry in the SEL field represents the type of device associated with the special directory number - in this case, the device is a coin telephone. The LC_TYPE field defines the type of schedule and rate step associated with this number (this entry is the same as the entry in table LCLRS). The ACTS_COMPATIBLE field indicates whether

the coin telephone is or is not compatible with the ACTS feature. The RESCOIN field indicates whether the coin telephone is subject to restricted billing. And the RBILCLAS field defines the type of restricted billing that is to apply to the coin telephone.

Table SPLDNID and table LCLRS work in conjunction. For example, assume that a call is made from a coin telephone (SEL) and the number of that coin phone is 4163852411 (SPLDN). The schedule name and rate step associated with that number is STD (LC_TYPE). Several other tables are checked to determine what tariff, schedule, and rate step are associated with 4163852411. All this information is indexed into table LCLRS. Once the information is datafilled into table LCLRS, it can be determined whether the calling number is to be charged the regular (standard) rate or a lower (nonstandard) rate. In this example, 4163852411 is assigned to the BELLONT tariff and is subject to a standard rate step - in this case, 350. Similarly, in the second example (4163852211), a call originating within the same NPA-NXX and assigned to the same tariff is subject to a nonstandard rate step - in this case, 345.

Datafilling table LNCODE

The specifications for the BR0087 feature are outlined in the Line Number Method of Coin Control (LNCODE) table. The LNCODE table lists the special code associated with each coin control function provided by the Line Number Method of coin control.

Datafill example for table LNCODE

The following example shows sample datafill for table LNCODE.

MAP display example for table LNCODE

```
SNPA     COINCOL     COINRET     RERING
---------------------------------------
613        12            17         5
```

In the preceding figure, SNPA, COINCOL, COINRET, and RERING represent the fields in table LNCODE. In this example, the special codes 12, 17 and 5 apply to the serving Numbering Plan Area (NPA). For example, if 613-NXX-12-XXXX were outpulsed from the Access Tandem towards the local end office, it would indicate to the local end office that a Coin Collect function is required.

Datafilling tables TOPSCOIN

The TOPS Coin Supervision Signaling Option feature creates the TOPSCOIN table. This table allows the Operating Company to define the delay between

TOPS Call Processing Features (Coin) (continued)

the reception of the last calling digit and the transmission of coin signals on 0+, 0-, and 1+ coin calls.

The Coin First Return on Disconnect feature creates three new fields in table TOPSCOIN to allow the Operating Company to specify whether a Coin Return signal or pad enable signal should be sent on 1-800 or (1)-950 coin calls. These new fields are CCFCNRET, PADSTATB, and PADSTAT8.

The TOPSCOIN table allows the Operating Company to specify the delay between the reception of the last calling digit by the TOPS office and the transmission of coin signals by the TOPS office on 0+, 0-, and 1+ coin calls. The delay is set on a trunk group basis. By using this table, the Operating Company can set the delay anywhere between 0 and 2 seconds, in 10 millisecond increments. If the Operating Company does not specify a delay in this table, the system assumes the default delay of 750 milliseconds.

The following table shows the datafill specific to TOPS Call Processing Features (Coin) for table TOPSCOIN. Only those fields that apply directly to TOPS Call Processing Features (Coin) are shown. For a description of the other fields, refer to the data schema section of this document.

Datafilling table TOPSCOIN (default values)

Field	Subfield or refinement	Entry (default value)	Explanation and action
CNSDELAY		75 (750 millisceconds)	This field specifies the delay between the reception of the last calling digit and the transmission of the coin signal.
PADSTAT0		UNKNOWN	This field specifies the state in which the digitone keypad was left by the end office upon initial connection to the tandem for Mechanized Calling Card Service (MCCS) and operator-assisted 0+ and 0- coin calls.
PADSTAT1		UNKNOWN	This field specifies the state in which the digitone keypad was left by the end office upon initial connection to the tandem for Automatic Coin Toll Service (ACTS) or operator-assisted 1+ coin calls.
COINTYPE		CCFCDF	This field specifies the type of coin telephone that is serviced by the TOPS trunk specified in field GRPKEY in table TRKGRP. Enter CCFCDF if both types of telephones are serviced by this trunk.

Datafilling table TOPSCOIN (default values)

Field	Subfield or refinement	Entry (default value)	Explanation and action
CCFCNRET		N	This field specifies whether a coin return signal is sent upon termination of a 1-800 or 1-950 coin call. When the entry is N, no special call signals are sent when the call is terminated.
PADSTATB		UNKNOWN	This field indicates the state of the keypad upon connection to the end office on 1-950 coin calls. When the entry is UNKNOWN, the state of the keypad cannot be determined.
PADSTAT8		UNKNOWN	This field indicates the state of the keypad upon connection to the end office on 1-800 coin calls. When the entry is UNKNOWN, the state of the keypad cannot be determined.

Datafill example for table TOPSCOIN

The following example shows sample datafill for table TOPSCOIN.

MAP display example for table TOPSCOIN

```
GRPKEY  CNSDELAY  PADSTAT0  PADSTAT1  COINTYPE  CCFCNRET
PADSTATB  PADSTAT8
------------------------------------------------------
TOPS1      75     ENABLED   DISABLED     CCF       Y
DISABLED  ENABLED
```

Translation verification tools

TOPS Call Processing Features (Coin) does not use translation verification tools.

SERVORD

TOPS Call Processing Features (Coin) does not use SERVORD.

TOPS Call Processing Features (Connected Calls)

Ordering codes

Functional group ordering code: OSB00101

Functionality ordering code: not applicable

Release applicability

TOPS15 and up.

Prerequisites

To operate, TOPS Call Processing Features (Connected Calls) requires the following:

- Functionality BAS Generic, BAS00003
- Table TOPSFTR paramter TOPS_ON_OFF_SWITCH = Y

Description

This functionality is provided by the following features:

Feature number	Feature name
BV0327	Service Code 1150
BV0328	Service Code 1155
BV0341, BV0153, BV0278, BV0152, BV0340, BV0339	1+, 0+, 0- Calls to DMS-200 TOPS
BV0158, BV0326-BV0329, BV0407, BV0408	Service Codes
BR0224	Two-Way Operator Office Trunk (TWOOT)
BR0776	0+ Local Calls on DMS-200 TOPS
AF0171	NPA on 0+ Seven-Digit Local Calls
BR35939	Do not send DA_SERV HOBIC records (BCS36)
CH20173	Calls drop on tandem to TOPS (BCS36)
BQ11959	AIN 0.1 Routing to TOPS extension (BCS36)
59006865	MD Code Removal and ReEngineering (TOPS12)

TOPS Call Processing Features (Connected Calls) (continued)

BV0341, BV0153, BV0278, BV0152, BV0340, BV0339 - 1+, 0+, 0- Calls to DMS-200 TOPS

Call routing to an Operator Position is basically the same for all of the following call types. The only difference is how a call is handled by the operator based on the station class or on the destination of that call.

The following is a list of call types.

- BV0341, BV0153 - Non-coin 0+, 0-
- BV0278, BV0152 - Operator Number Identification (ONI) Calls
- BV0340 - Coin 1+, 0+, 0-
- BV0339 - Hotel 1+, 0+, 0-

BV0158, BV0326-BV0329, BV0407, BV0408 - Service Codes

Service codes (1X1, 115X[115X1]) are used by operators for the following reasons.

- Assistance is required by the Operating Company operator to complete dialable calls, e.g., repeated reorders encountered, ineffective attempt announcement, or a no ring condition.
- Ring down for tributary offices is required.
- Requests for Busy Line Verification (BLV) have been made.
- Emergency assistance is required.

BR0224 - Two-Way Operator Office Trunk (TWOOT)

A Two-Way Operator Office Trunk (TWOOT) is a tandem-connecting trunk that connects an EO and a tandem office. Two-way TOPS and Operator (TRKGRP OP) trunks are now used primarily for this type of interconnection.

BR0776 - 0+ Local Calls on DMS-200 TOPS

The 0+ Local Calls on DMS-200 TOPS feature allows an Operating Company to route 0+ local calls to a Traffic Operator Position System (TOPS).

AF0171 - NPA on 0+ Seven-Digit Local Calls

AF0171 inserts the NPA of the called party into the AMA records generated for 0+ seven-digit local calls.

BR35939 - Do not send DA_SERV HOBIC records (BCS36)

This PRSDOC can stop sending of hotel billing information center (HOBIC) records for all DA (directory assistance) calls.

TOPS Call Processing Features (Connected Calls) (continued)

CH20173 - Calls drop on tandem to TOPS (BCS36)

This activity provides a datafillable parameter in table TRKGRP which controls the duration of the zip tone request wink sent by the TOPS switch.

BQ11959 - AIN 0.1 Routing to TOPS extension (BCS36)

The capability routes Advanced Intelligent Network (AIN) 0.1 operator requested calls to TOPS.

Operation

BV0341, BV0153, BV0278, BV0152, BV0340, BV0339 - 1+, 0+, 0- Calls to DMS-200 TOPS

When a call arrives at a DMS-200/TOPS tandem switch from an End Office (EO) it must be identified so the tandem knows whether the call should be routed directly to TOPS, to an intra-LATA destination or to an an inter-LATA destination. The tandem makes this determination by first examining the prefix and the station class of the call.

Note: Refer to Base TOPS Equal Access, OSEA0101, for a description of the signaling, the call setup, and the translations for a DMS-200/TOPS access tandem switch with TOPS EA software.

A call prefix indicates how a call was dialed. For example: a 0- prefix means that a subscriber dialed only a 0 and requires operator assistance.

The following prefixes are used for calls from coin, non-coin, and hotel stations:

- Operator Assisted (0+): Indicates the subscriber dialed 0 plus a 3-, 7-, or 10-digit number and requires operator assistance.
- Operator Handled (0-): Indicates the subscriber dialed a 0 only and requires operator assistance.
- Direct Dialed (1+): Indicates the subscriber dialed 1 plus a 3-, 7-, or 10-digit number.
- Operator Assisted, International (01+): Indicates the subscriber dialed 01 plus a country code, a city code, and a station number and requires operator assistance.
- Direct Dialed, International (011+): Indicates the subscriber dialed 011 plus a country code, a city code, and a station number.

The station class of a call indicates the type of station from which, such as coin, hotel, or non-coin. The tandem determines the station class of a call in various ways, depending on the type of trunk group carrying the call.

TOPS Call Processing Features (Connected Calls) (continued)

The group types for incoming trunk groups are dedicated and combined. Dedicated trunks carry traffic with one station class, e.g., 1+, 0+, and 0- coin calls. Combined trunks carry traffic with different station classes, e.g., 1+ coin and non-coin calls or 1+, 0+, and 0- hotel and mobile calls.

If a call is carried on a dedicated trunk group, the tandem uses the STATCLAS field of the TOPS TRKGRP table to determine the station class of that call. In this case, the STATCLAS field contains entries such as COIN, HOTEL, and MOBILE.

If a call is carried on a combined trunk group, the tandem also examines the STATCLAS field. However, in this case, the STATCLAS field contains entries such as COMBINED and RESTBIL, meaning the called number and the Automatic Number Identification (ANI) spill must be used to determine the station class of the call.

The Automatic Number Identification (ANI) spill provides the information necessary for billing and determines whether operator assistance is required for call completion.

During TOPS call processing, ANI spill is saved in the TOPS Recording Unit (TRU) for reference during call setup and for billing when a call is completed.

> ***Note:*** Office parameter TOPS_NUM_CAMA_RU specifies the number of TRU required for call processing. The value of this parameter should be equal to the maximum number of calls going to the Operator Position. One TRU is required for the duration of each TOPS-handled call. If no TRU are available, there is is no operator call processing.

The format of the ANI spill for a call is determined by the signaling type used by the trunk carrying the call. The DMS-200/TOPS accepts various types of signaling, such as Traditional Operator Services Signaling (Traditional OSS), Interim Operator Services Signaling (Interim OSS), and Feature Group D (FGD) Signaling.

Incoming trunk groups to the DMS-200/TOPS can use OSS and FGD Signaling only if the tandem includes the TOPS EA software. This software allows the tandem to accept and analyze Operator Services Signaling. FGD Signaling is also accepted by a tandem with TOPS EA. However, the tandem analyzes only the signaling information received from the EAEO during the

TOPS Call Processing Features (Connected Calls) (continued)

first stage of outpulsing. The information received during the second and the third stages of outpulsing are simply passed through to the carrier.

Note: Only Traditional OSS is described in this document. For a description of OSS and FGD Signaling, refer to Base TOPS Equal Access , OSEA0101.

The ANI spill for calls on incoming TOPS trunk groups using Traditional OSS includes a key pulse, a 1-character ANI ID digit, the calling number, and a start signal.

The tandem examines the following information to determine the station class of calls on combined trunk groups using Traditional OSS:

- Traditional OSS with Multifrequency (MF) Pulsing - the ANI ID digit of the calling number and the start signal of the called number
- Traditional OSS with Dial Pulsing - the ANI ID digit and the start signal of the calling number.

The DMS-200/TOPS determines the class of service of Operator Number Identification (ONI) traffic differently, depending on the pulse type of the trunk group using Traditional OSS.

Typically, if an incoming trunk group has combined traffic and uses Traditional OSS with MF pulsing, the EO outpulses the called number plus ANI spill for the ANI traffic and the called number plus KP+1+ST or KP+01+ST/STP for the ONI traffic. In these cases, the tandem examines the STATCLAS field and the signaling information to determine the class of service of the traffic.

However, if an incoming trunk carries only ONI traffic and uses Traditional OSS with DP, the tandem must rely on a tone from the EO or a verbal response from the hotel operator to determine the class of service of the traffic.

Calls on an incoming trunk group that carries only ONI traffic are always assumed to be non-coin until a verbal or auditory response (ZIP tone) indicates otherwise.

If a call originates from a hotel station, the hotel operator identifies the call to the operator. If a call originates from a coin station, the EO generates a Coin Identification Tone (ZIP) to identify the call to the operator. The ZIP tone is sent when answer is received.

Note: When a call from a coin station is presented to an operator after being held in the queue, the ZIP tone is not repeated (TONEREPT field set to NA).

TOPS Call Processing Features (Connected Calls) (continued)

For an intra-LATA coin call, the EO sends the called number to the DMS-200/TOPS, which sends a request for the tone to the EO. The tone is then sent directly to the operator. For an inter-LATA coin call, the EO sends the called number to the tandem, which passes the called number to the carrier operator. The carrier operator then sends a request for the tone to the tandem, which propagates the request through to the EO. When it receives the request, the EO sends the tone directly to the carrier operator.

The CLGID field in the TOPS TRKGRP table must be set to ONI to indicate a dedicated ONI trunk group, and the TONEREPT field, which is also in TOPS TRKGRP, should be set accordingly when ZIP tones are required.

The following two tables show the start signals and the ANI ID digit values for Traditional OSS.

Start Signals for Traditional OSS

Trunk group type	Start signal	Description
DEDICATED		
	ST	1+ DD traffic (coin and non-coin)
	STP	0+ or 0- OA traffic (coin and non-coin)
COMBINED		
	ST	1+ DD traffic (coin)
	STP	0+ or 0- OA traffic (coin)
	ST2P	1+ DD traffic (non-coin)
	ST3P	0+ or 0- OA traffic (non-coin)

ANI ID Digits for Traditional OSS

ANI ID digit	Description
0,3	Identified line, no special treatment
1,4	ONI (multiparty)
2,5	ANI failure
6	Hotel/motel (without room identification)
7	Restricted: Coinless, hospital, inmate

TOPS Call Processing Features (Connected Calls) (continued)

ANI ID Digits for Traditional OSS

ANI ID digit	Description
8	Operating Company Defined
9	Operating Company Defined

The following four tables show the format of the signaling information for different types of calls carried on dedicated or combined trunk groups that use Traditional OSS and Dial or MF Pulsing.

Traditional OSS Over MF Combined Trunks

Number dialed and call type	Called number	Automatic Number Identification spill
Coin		
(1)+3/7/10 D	KP+3/7/10 D+ST	KP+I+0/7 D+ST
0 +3/7/10 D	KP+3/7/10 D+STP	KP+I+0/7 D+ST
0	KP+STP	KP+I+0/7 D+ST
Non-coin		
(1)+3/7/10 D	KP+3/7/10 D+ST2P	KP+I+0/7 D+ST
0 +3/7/10 D	KP+3/7/10 D+ST3P	KP+I+0/7 D+ST
0	KP+ST3P	KP+I+0/7 D+ST

TOPS Call Processing Features (Connected Calls) (continued)

Traditional OSS Over MF Dedicated Trunks

Number dialed and call type	Called number	Automatic Number Identification spill
Coin and Non-coin		
(1)+3/7/10 D	KP+3/7/10 D+ST	KP+I+0/7 D+ST
0 +3/7/10 D	KP+3/7/10 D+STP	KP+I+0/7 D+ST
0	KP+STP	KP+I+0/7 D+ST

Traditional OSS Over DP Combined Trunks

Number dialed and call type	Called number	Automatic Number Identification spill
Coin		
(1)+3/7/10 D	3/7/10 D	KP+I+0/7 D+ST
0 +3/7/10 D	Seizure (no digits)	KP+I+0/7 D+STP
0	0 D (no digits)	KP+I+0/7 D+STP
Non-coin		
(1)+3/7/10 D	3/7/10 D	KP+I+0/7 D+ST2P
0 +3/7/10 D	Seizure (no digits)	KP+I+0/7 D+ST3P
0	0 D (no digits)	KP+I+0/7 D+ST3P

TOPS Call Processing Features (Connected Calls) (continued)

Traditional OSS Over DP Dedicated Trunks, Coin and noncoin

Number dialed and call type	Called number	Automatic Number Identification spill
(1)+3/7/10 D	3/7/10 D	KP+I+0/7 D+ST
0 +3/7/10 D	Seizure (no digits)	KP+I+0/7 D+STP
0	0 D (no digits)	KP+I+0/7 D+STP

The following example illustrates the concepts just presented. Assume that a subscriber dialed a 0+ call from a public coin telephone booth. Assume also that the call is carried to the DMS-200/TOPS on a combined incoming TOPS trunk group that uses Traditional OSS and MF pulsing. The signaling information for this call follows:

MAP display example for Traditional OSS Over DP Dedicated Trunks

```
FORMAT OF          FORMAT OF          FORMAT OF
CALLED NUMBER      CALLED NUMBER      CALLING NUMBER
DIALED             AS OUTPULSED       AS OUTPULSED
BY SUBSCRIBER      BY END OFFICE      BY END OFFICE
_____________      _____________      _________________
0+4817713          KP+4817713+STP     KP+0+8511309+ST
```

By examining the start signal of the called number, the tandem determines that operator assistance is required for this call to be completed. To determine the station class of the call, the tandem examines the ANI ID digit (0) of the calling number and the start signal (STP) of the called number. The STP signal indicates that the call is a 0+ call from a coin station; the ANI ID digit confirms that the station class is coin. Refer to BV0341, BV0153 (Non-coin 0+, 0-) for a description of how a coin call is handled once it reaches the operator.

Call appearance at Operator Position

Depending on the type of call arriving at the Operator Position, various messages, such as the following, are displayed on the Operator Position CRT. These messages can appear in conjunction with a call prefix or a station class message.

TOPS Call Processing Features (Connected Calls) (continued)

The following messages are displayed on the Operator Position CRT:

- CLG # XXX-XXX - Identifies the calling Numbering Plan Area (NPA) and NXX codes of the trunk group carrying ONI or ANI-failure calls. These calls may have originated from coin, hotel, or non-coin stations. Refer to table TOPSDISP for additional information.

  Note: The NPANXX code displayed is the first NPANXX code listed for a particular trunk group in the TOPS Billing Code (TOPSBC) table. This code may not be the NPANXX for the area from where the subscriber is calling.

- CLG # XXX-XXX-XXXX - Identifies the calling number for an ANI-success call. This message is displayed for calls originating from coin, hotel, or non-coin stations.
- CLD # XXX-XXX-XXXXXX - Identifies the called number. The maximum number of digits (XXX) that can be displayed is 15. This message is displayed for 0+ calls.
- 0 (flashing) - Appears if TOPS is unable to identify the kind of call dialed or the station from which a call originated.
- SPL # - Identifies a 0+ call if the TOPS software includes the Mechanized Calling Card Service (MCCS) feature and the call times out before the subscriber enters his calling card number.

The following paragraphs describe some of the messages displayed for incoming coin, hotel, ONI, and non-coin calls.

The messages shown on the Operator Position CRT are defined in the Expanded Operator Display (TOPSDISP) table and the TOPS table, which are described in table TOPSDISP and table TOPS.

Office parameters

The following office parameters are for CAMA traffic, which includes ONI calls, ANI-failure calls, and ANI-success calls. These parameters are in the Engineered Office Parameter (OFCENG) table and the Variable Office Parameter (OFCVAR) table. Refer to *Office Parameters Reference Manual*. for a detailed description of these parameters.

TOPS Call Processing Features (Connected Calls) (continued)

The following is a list of office parameters:

- TOPS_NUM_CAMA_RU- This office parameter specifies the quantity of CAMA/TOPS recording units required. The OFCENG table contains this parameter

Table TOPS

The Digit Translation Routing to TOPS (TOPS) table defines the messages displayed for certain types of calls, such as coin, hotel, and non-coin, and specifies whether AMA records should be generated for these calls.

Table TOPSDISP

The Expanded Operator Display (TOPSDISP) table defines special instructional messages, the content of which is based on the incoming TOPS trunk groups to the DMS-200. These messages, which may be the NPANXX code of the trunk or a mnemonic indicating the trunk type, consist of up to six characters and appear in conjunction with the CLG # message.

The entry in the NPANXXRQ field of the TOPS Trunk Group (TRKGRP) table determines whether the originating NPANXX is displayed for a trunk group. The value in the DISPLAY field of the TOPS TRKGRP table is an index into the TOPSDISP table (DISP_NO field).

The Display Originating NPANXX to Operator (NPANXXRQ) field in the TOPS TRKGRP table specifies whether the NPANXX code(s) for a TOPS trunk group should be displayed to the operator. If this field is set to Y (yes), messages in the following formats appear on the Operator Position CRT. (Refer to Call Appearance at Operator Position.)

ANI-success Calls	NPA NXX XXXX
ANI-failure Calls	NPANXX
ONI Calls	NPANXX

The NPANXX information comes from the Billing Code (BILLCODE) field of the TOPS Billing Code (TOPSBC) table. This table lists all NXX central office codes, special billing codes, and WATS originating codes allowed for calls on TOPS trunk groups.

The TOPSDISP table can be set up as follows:

MAP display example for table TOPSDISP

```
 DISP_NO        INSTRUCT
-----------------------
      0          TPCOMF
```

BV0341, BV0153 - Non-Coin 0+, 0-

A subscriber at a non-coin station dials only 0 when operator assistance is required. When a 0- call arrives at the Operator Position, a 0 appears on the Operator Position CRT. The operator must determine what the subscriber wishes to do, then proceed accordingly, such as the following:

- provides assistance if required, such as busy line verification
- provides assistance for service complaints
- provides subscriber dialing instructions
- completes the call to an emergency number
- transfers the call to another operator
- proceeds according to local instruction for call handling intercept or plant alarm calls.

If a subscriber dials 0 plus a 3-, 7-, or 10-digit number, 0+ appears on the Operator Position CRT. The operator then provides the special handling requested by the subscriber such as the following:

- provides time and charges
- provides special billing, such as charging the call to the called number, a third number, or a credit card
- transfers the call to another operator.

BV0278, BV0152 - Operator Number Identification (ONI) Calls

ONI calls (e.g., 1+ coin) are routed to the Operator Position for collection of the calling number. A double beep tone announces to the operator that an ONI CAMA call has arrived and indicates to the subscriber that operator assistance is at hand. The operator requests the calling number, then enters that number into the system.

The number is written to the Centralized Automatic Message Accounting TOPS Recording Unit (CTRU), then screened for validity. If the calling number is valid, the call is automatically released from the Operator Position when the operator enters the last digit of the line number. The conversation time between the parties is calculated and recorded in the CTRU.

TOPS Call Processing Features (Connected Calls) (continued)

If the exchange of the calling number does not match any of the exchanges assigned to the incoming trunk group, the operator is alerted by a flashing message. Then the operator reenters the calling number. The operator terminates the call if the second attempt to verify the calling number is unsuccessful.

The following table shows some of the messages shown on the Operator Position CRT for ONI calls.

Messages at Operator Position for ONI calls

Trunk group type	Traffic type	Message	Description
Dedicated	Hotel	1+ HOTEL CLG #, 0+ HOTEL CLG #, 0- HOTEL CLG #	This message appears if a call from a hotel station arrives at the Operator Position on a dedicated trunk group that carries only ONI traffic. In this case, the hotel PBX attendant announces the call as one coming from a hotel.
Dedicated	Non-coin	CAMA	This message appears if a 1+ ONI or an ANI-failure call from a non-coin station arrives at the Operator Position on a dedicated trunk group that carries only CAMA traffic. The CAMA message is flashing if the call is an ANI-failure call. The CAMA message is steady if the call is an ONI call.
Dedicated	Coin	0+ COIN PRE CLG #, 1+ COIN PRE CLG #, 0- CLG #	This message appears if a call from a coin station arrives at the Operator Position on a dedicated trunk group that carries only ONI traffic. An audible ZIP tone indicates that the call is from a coin station.

Messages at Operator Position for ONI calls

Trunk group type	Traffic type	Message	Description
			For 1+ calls, the charge and minutes (CHG, MIN) appear on the CRT after the operator enters the calling number. The charge, which includes tax, is the amount to be collected for the station-paid initial period. For 0+ calls, the charge and minutes (CHG, MIN) appear on the CRT after the operator enters the calling number and presses either the station- or the person-paid (STA PD, PER PD) class charge key. The charge displayed includes the tax. The charges and minutes are not displayed for 1+ or for 0+ calls if the operator presses any class charge key other than paid.

BV0340 - Coin 1+, 0+, 0-

When a subscriber places a call from a coin station, that call is routed to an operator for quotation of initial and overtime charges and collection of the initial deposit. The operator is notified that the call is from a coin station by the messages that appear on the Operator Position CRT. The charge for the call is also shown on the CRT.

The subscriber must tell the operator how the call will be paid; i.e., will the subscriber pay for the call or will the call be billed to the called number, to a credit card number, or to a third number.

BV0339 - Hotel 1+, 0+, 0-

A hotel guest can dial the following types of calls: toll and local. Toll calls (8 + called number) made by hotel guests are routed over facilities generally referred to as level-8 trunks, from the hotel private automatic business

TOPS Call Processing Features (Connected Calls) (continued)

exchange (PABX) to the serving central office. The local office then routes the call over TOPS trunk groups to the TOPS serving office.

Local calls (9 + called number) made by hotel guests are routed over facilities generally referred to as level-9 trunks, from the hotel PABX to the serving central office. The local office then translates and routes the call in the same manner as any other local call. This type of call is used only when the hotel offers free local dialing.

Note: The called number includes any prefix digits required to route the call (e.g., 1+, 0+, 011+, and 01+).

All hotel-originated, toll calls arrive at TOPS over TOPS trunk groups.

The operator intercepts toll calls (1+, 0+, 0-) from hotels and requests the appropriate information from the caller. For 1+, 0+, and 0- calls, the operator requires the name and room number of the caller plus the called party number. The call details provided to the operator (e.g., name, room number, called party, time and charges) are output on a printer when the call is completed All calls from hotels are not hotel calls. Some large hotels have their own billing computer.

When a guest toll call terminates, TOPS transmits all call details to a teletypewriter (TTY). Depending on call volumes, some hotels may be equipped with direct TTY facilities for autoquote (AQ) service.

Or, the call details can be transmitted verbally to the hotel staff by the time and charges (T&C) clerk. An optional Hotel Administration System (HADS) provides a means of controlling and reporting on the status of the hotel printers. Refer to 297-2271-100 and to 297-2271-102 for a description of the TOPS hotel system.

For hotels not provided with AQ service, call details are printed on a voicequote (VQ) TTY located in the hotel billing information center (HOBIC). The HOBIC operator telephones the hotel and verbally quotes call details including guest billing information.

In addition to containing a VQ TTY, the HOBIC contains the following TTYs:

- record (REC) TTY
- HOBIC administrative (HADS) TTY

The following figure shows the TOPS configuration for handling hotel-originated traffic.

TOPS Call Processing Features (Connected Calls) (continued)

TOPS automated hotel/motel configuration

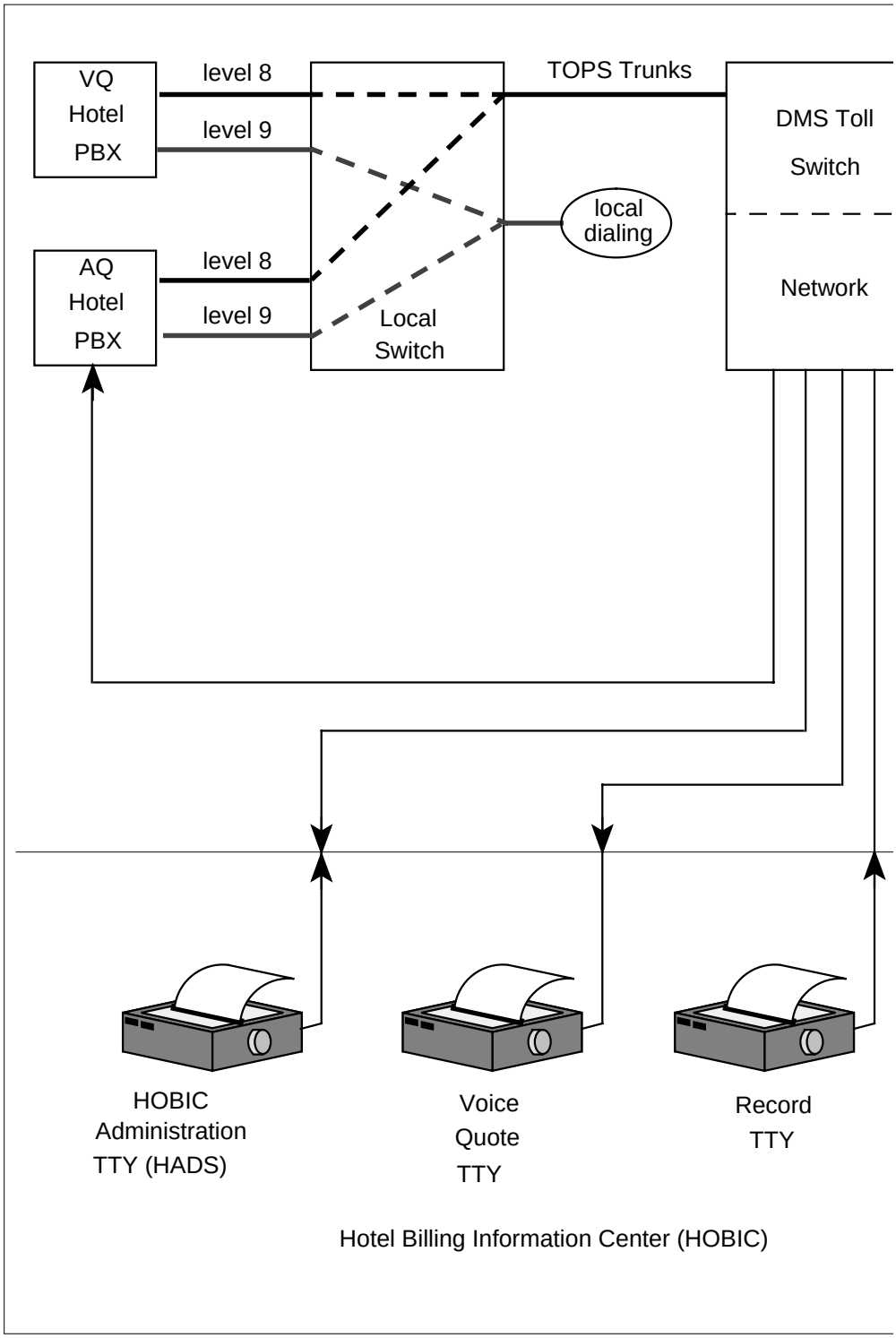

TOPS Call Processing Features (Connected Calls) (continued)

Hotel administrative toll calls that require operator assistance (e.g., 9 + 0 and 9 + 0+) are not intercepted by the hotel diversion equipment, but arrive at TOPS as non-coin-originated calls. The operator can change these calls from non-coin to hotel-originated by pressing the HOTEL origination class key. Direct distance dialing (DDD) calls (e.g., 9 + 1+) are not routed to TOPS unless the station has an operator number identification (ONI) class or unless an automatic number identification (ANI) failure occurs. For either an ONI or ANI fail call, the call is treated as a 1+ non-coin call. CAMA (central automatic message accounting) or RCAMA (Remote CAMA) appears on the operator screen and cannot be changed to a 1+ Hotel call by the operator.

If a call arrives with an ANI ID digit of 6, it is automatically identified as a hotel-originated call. The message *0 HOTEL* is displayed to the operator when a 0- hotel call arrives; *0 HOTEL* is displayed for 0+ hotel calls.

Tasks associated with administering the hotel service system

The following list of tasks is associated with administering the hotel service system:

- Setting up the hotel service system
  - — Identifying hotel traffic to TOPS
  - — Rating hotel-originated traffic
- Monitoring the hotel service system
  - — Using the hotel service system for attended pay stations (APS)

For additional information about the hotel service system, see the following table.

Other sources

For more information about	See
the data tables that route hotel-originated traffic	the data schema section of this document
the AMA records generated for hotel calls using the Northern Telecom (NT) format	*Automatic Message Accounting Reference Manual (NT Format)*

TOPS Call Processing Features (Connected Calls) (continued)

Other sources

For more information about	See
the AMA records generated for hotel calls using the Bellcore (BCR) format	*Automatic Message Accounting Bellcore Format User Guide*
the maintenance procedures for equipment used to route and record hotel-originated traffic	*TOPS 04 Maintenance Manual* , *TOPS MP Maintenance Manual*, *TOPS MP/MPX Maintenance Manual*

Identifying hotel traffic to TOPS

The two types of class identification used for hotel originated traffic are hotel class identification and non-coin class identification. The following paragraphs describe these classifications.

Hotel class identification

Toll calls are routed from the hotel PABX to the serving central office and switched through this office to TOPS. If the serving office is arranged to identify hotel PABX trunks, two types of call origination may be used:

- Guest (Level 8) Dialing. The guest must receive a second dial tone after the prefix digit 8 has been dialed and a trunk from the hotel PABX to a central office line has been seized. After receipt of the second dial tone, the guest continues dialing the digits required to complete the call.
- PABX Attendant Dialing. The PABX attendant may access PABX trunks directly without dialing 8 and receive dial tone from the serving office. The attendant uses 0, 0+, 1+, 01+, or 011+ dialing to place the call on behalf of the guest.

In either case, the hotel call origination is automatically identified by TOPS, causing HOTEL to be displayed on the operator screen.

TOPS Call Processing Features (Connected Calls) (continued)

Guests, at hotels equipped with dial telephones and level 8 trunks, dial their own long distance calls as described in the following table.

Hotel Guest Dialing

Digits Dialed	Description
8+1+7 D or 8+1+10 D	The guest dialed a station-paid toll call to either a North American Home Numbering Plan Area (HNPA) telephone or to a Foreign Numbering Plan Area (FNPA) telephone. The digits in the dialing string for this call are 8, the hotel PABX toll access code; 1, the Direct Distance Dialing (DDD) access code; and 7 or 10, the digits of the called number. For this call, the operator is required only to enter the room number and the calling number of the guest in the event of an ANI failure.
8+011+CC+NN	The guest dialed a station-paid overseas call. The CC and NN codes in the dialing string for this call represent the country code (2 or 3 digits) and the national number (4 to 9 digits). For this call, the operator enters only the room number of the guest.
8+0	The guest dialed 0 only, meaning that operator assistance is required. The operator enters the called number; the room number of the guest; the billing information, such as credit card or third number billing; and the charge class, e.g., person-to-person.
8+0+(NPA)+7 D	The guest dialed 0 plus the required digits for a toll call; however, operator assistance is required for billing purposes. The operator enters the room number of the guest and the appropriate billing instructions as previously described for a 0- call.
8+01+CC+NN	The guest dialed an overseas call, and operator assistance is required for special billing purposes.

Non-coin class identification

If a central office cannot identify the hotel PABX trunks used for guest toll calls, the PABX attendant must place the call on a 0, 0+, or 01+ basis. The PABX attendant must then inform the TOPS operator that the call is a hotel guest call. When this occurs, the call is initially identified as having non-coin origination and it is the responsibility of the TOPS operator to indicate that the

call originates from a hotel by pressing the HOTEL key on the position keyboard.

Using dedicated trunks to identify hotel traffic

Although hotel level 8 trunks are normally routed to the serving office, under certain conditions the hotel PABX can be trunked directly to TOPS.

Any central office having hotel class identification of the hotel level 8 PABX trunks may route guest traffic to TOPS on trunks dedicated to carry only hotel traffic. In this case, hotel traffic is identified by the station class HOTEL on the TOPS incoming trunk group. Direct hotel automatic number identification (ANI) can be used to provide an ANI line directory number (LDN) if the hotel is the only hotel being served by the dedicated trunk group. This is done by storing the hotel LDN in a TOPS data table and referencing the table when a call arrives on the trunk group.

A hotel PABX may be arranged to route level 8 traffic directly to TOPS. It is important to note that the DMS does not accept DIGITONE dialing on level 8 trunks. The signaling capabilities of the hotel PABX must meet all requirements of incoming TOPS trunks.

Using combined trunking with ANI 6 to identify hotel traffic

If, in addition to the capability to identify hotel lines, a central office is modified to transmit to TOPS an ANI information digit of 6 to identify hotel guest traffic, the traffic can be combined with non-coin or coin traffic on a single trunk group. In this case, the combined (COMB) station class needs to be assigned to the trunk group.

Identifying hotel level 8 traffic served by a remote central office

When it is impractical to modify an office for hotel origination identification, hotels served by that office can route level 8 traffic to TOPS through a remote office which is modified to identify hotel service. This remote serving arrangement can be implemented using the methods shown in the following exhibit.

TOPS Call Processing Features (Connected Calls) (continued)

ANI equipment extension

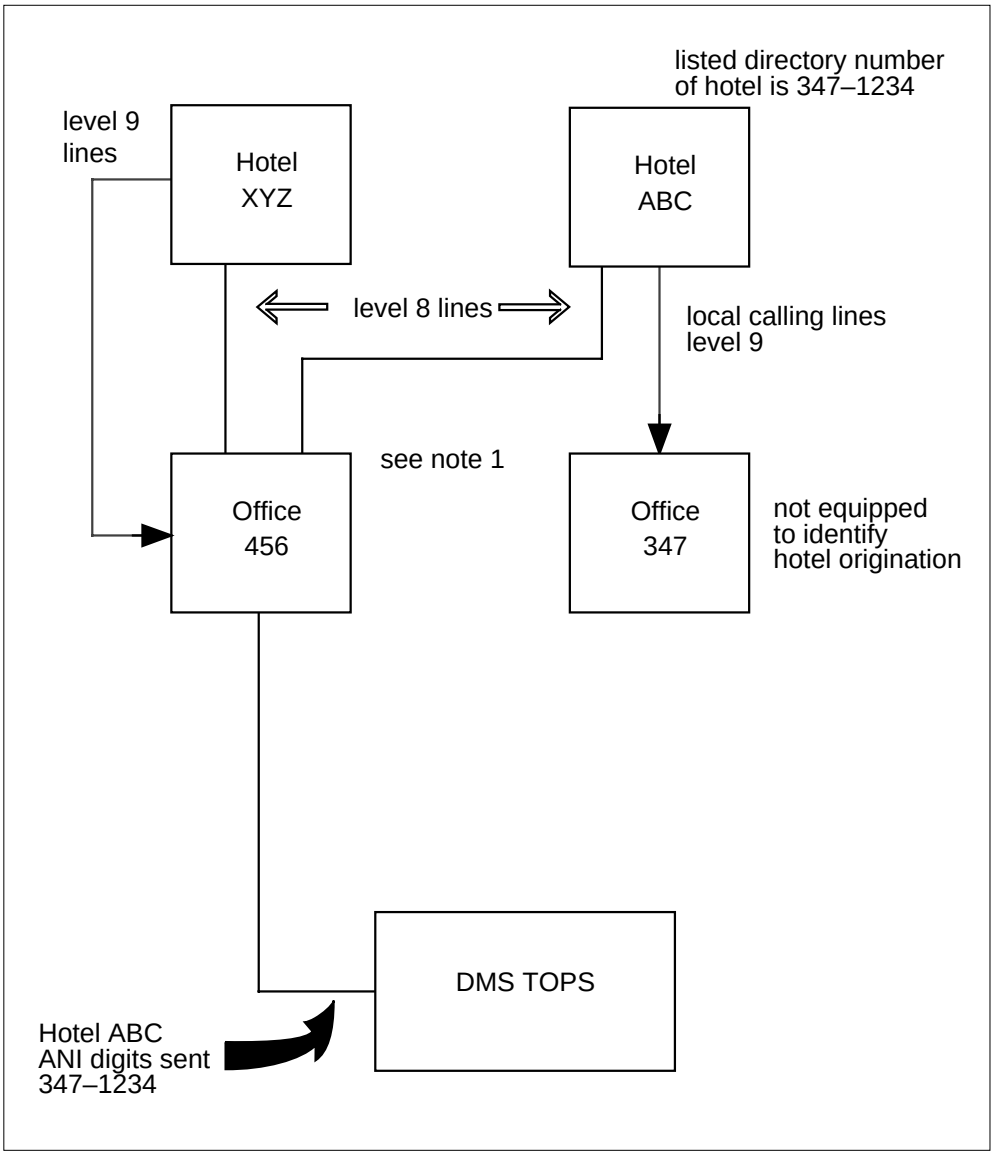

Note 1: Equipped to identify hotel origination and with ANI equipment extended to identify the 347 office code.

Note 2: Office 456 ANI equipment is extended to identify the office code 347. Therefore, Hotel ABC level 8 lines may be assigned the ANI number 347-1234, the LDN of the hotel.

Using pseudo hotel NXX codes to identify hotel traffic

TOPS software provides substitute telephone numbers for hotel-originated traffic served by offices such as crossbar and step-by-step that cannot provide

TOPS Call Processing Features (Connected Calls) (continued)

ANI identification (ID) digits 6 or 7 in the ANI spill. The traffic from these hotels is routed over a trunk to an office capable of providing the proper ANI ID digits. This office then sends the traffic on to TOPS.

This feature is controlled using tables that are modified by the Operating Company.

These calls are sent either on regular TOPS combined trunks with ANI ID digits 6 or 7, or on class-of-service look-up trunks with ANI ID digit 0. The traffic is sent between the serving office and the intermediate office on foreign exchange (FX) lines. Therefore, the ANI spill received by TOPS contains the calling number of the foreign exchange line rather than the actual directory number.

To quote the correct time and charges, the actual directory number is displayed on the operator screen and is used for rate calculations.

The table used by this feature, FXDNMAP, maps the foreign exchange line numbers received to the actual directory numbers which are then used for billing purposes.

Once it is determined that a call originated at a hotel, the information digits and table SPLDNID are examined. The calling number is checked in table FXDNMAP. If there is a match, the actual number found in the table is substituted for the number received in the ANI spill.

Since any calls that arrive at TOPS with an ANI ID digit 7 or ANI ID digit 0 on class of service look-up trunks cause a table look-up in table SPLDNID, the foreign exchange numbers must be entered in table SPLDNID as well as the actual numbers. If only the actual number is in the table, the foreign exchange number received in the ANI spill does not match the number in table SPLDNID and is not recognized as a hotel. Consequently, table FXDNMAP is not searched to find the actual number.

Handling ANI fail calls from hotels

If an ANI fail condition occurs, the actual number must be entered in table SPLDNID and table TOPSBC to ensure that the actual NPA of the hotel is valid. If the call arrives as ANI fail, the operator receives the actual hotel number.

Pseudo NXX codes can be implemented for any type of signaling handled by TOPS (i.e., BELLANI, OSS, and AMR5). The checks described in the preceding paragraphs are not made for hotel calls arriving on dedicated hotel trunk groups, since the intermediary offices do not forward these calls over dedicated hotel trunk groups.

TOPS Call Processing Features (Connected Calls) (continued)

Rating hotel-originated calls

For all sent-paid calls and 1156 (hotel-leave-word) calls originating from hotels served by TOPS and for collect calls to hotels served by TOPS, the computing of charges and taxes is done automatically by TOPS. Also, charges (excluding taxes) are computed automatically on all collect calls to hotels that are not served by TOPS. In the latter case, call details are transmitted to the hotel billing information center (HOBIC) for manual addition of taxes to quote to the hotel and guest.

In most cases, rating information required for charge and tax computation is resident in TOPS data. When rating information for certain points is not provided or cannot be provided because of limitations inherent in the rating system, the TOPS operator must manually key a rate step into the system before charges can be automatically computed.

Unless T&C is specifically requested, the following types of calls are not rated by the TOPS rating system:

- hotel guest calls charged to a called number (guest non-paid calls)
- hotel guest calls charged to a special billing number (third number or credit card)

The automatic message accounting (AMA) file entries for hotel calls (in addition to required billing entries) include charges and taxes.

Using the hotel service system for attended pay stations (APS)

Attended pay stations (APS) are attendant-supervised groups of non-coin public telephones located in areas of high pedestrian traffic such as airports. Attended pay stations allow customers to place local, long distance, or overseas calls to an attendant and pay for the chargeable calls immediately.

Each telephone within an APS group has a dedicated one-way incoming trunk to the TOPS serving office. All non-coin telephones within an APS group are part of a unique trunk group with a common LDN for the purpose of identification (direct ANI) and billing.

Establishing the call origination

When an APS station goes off hook, the call is routed to the TOPS operator and the system causes APS to be displayed on the TOPS operator screen.

The operator then takes the call details from the caller or attendant using the KP ROOM key to enter the booth or location number of the calling party telephone and the name of the caller. Upon authorization from the attendant, the operator then proceeds with the call.

TOPS Call Processing Features (Connected Calls) (continued)

Calculating the charges

Upon call termination, the system calculates the charges and displays the following information to the TOPS operator:

- APS
- Charges
- Duration
- Room number (booth number)
- Name of caller (if originally input)

When the APS location has an AQ TTY, the message is printed using the same format for hotels with AQ service.

When T&C are requested on calls paid for by the caller, the TOPS operator calls the APS attendant by using the RING BACK key. After quoting the T&C, the POS RLS key is pressed, the call is disconnected by the system, and a message is printed on the REC TTY.

When the quoting of charges to the APS attendant is omitted, the TOPS operator, on call completion, presses keys T&C and POS RLS. `PRINT T&C` is displayed on the screen. The call is taken down and messages are sent to the VQ TTY and the REC TTY.

Service codes (1X1, 115X[115X1]) are used by operators for the following reasons.

- Assistance is required by the Operating Company operator to complete dialable calls, e.g., repeated reorders encountered, ineffective attempt announcement, or a no ring condition.
- Ring down for tributary offices is required.
- Requests for Busy Line Verification (BLV) have been made.
- Emergency assistance is required.

The following table lists the service codes provided by the following TOPS features: BV0158, BV0326-BV0329, BV0407, and BV0408. The TOPS

TOPS Call Processing Features (Connected Calls) (continued)

service codes are defined in the Digit Translation Routing to TOPS (TOPS) table.

Messages at Operator Position for ONI calls

Code type	Feature #	Code	Description
1X1			
	BV0158	121	Emergency Assistance and miscellaneous uses. This code was used formerly for call completion and Busy Line Verification (BLV). Now, the 1159 or 11591 codes are recommended for BLV, and the 1158 and 11581 codes are recommended for call completion.
	BV0326	181	Toll Station
115X/115X1			
	BV0327	1150/11501	Universal or Coin Callback
	BV0328	1155/11551	Time and Charges Callback
	BV0329	1156/11561	Hotel Callback
	BV0407	1158/11581	Time and Charges Callback with Special Billing
	BV0408	1159/11591	Hotel Callback with Special Billing

Depending on the service code used by the operator, various messages appear on the Operator Position CRT. The following call types are assigned to calls arriving on incoming Intertoll (IT) trunk groups from distant operators that have dialed an access code for operator assistance. The access code is translated and routed using the TOPS table.

In the following list are call types that are assigned to calls arriving on incoming Intertoll trunk groups from distant operators that have dialed an access code for operator assistance.

- INW - This message appears for inward calls (service code 121). A NO AMA message accompanies the INW message on the Operator Position

CRT. This message is displayed because there is no charge for inward calls.

- 181 - This message appears for calls from another operator at a toll station.

The following call types are assigned to calls on incoming IT trunk groups from distant operators that have dialed an access code to transfer the call to an operator for completion. The access code is translated and routed using the TOPS table.

- 50 - This message (service code 1150) appears for an operator-dialed multidigit call-back call to the universal operator.
- 55 - This message (service code 1155) appears for an operator-dialed multidigit call-back call to a non-coin telephone when Time and Charges (T&C) are requested.
- 56 - This message (service code 1156) appears for an operator-dialed multidigit call-back call to a hotel.
- 58 - This message (service code 1158) appears for an operator-dialed multidigit call-back call to a non-coin telephone when Time and Charges (T&C) and special billing are requested.
- 59 - This message (service code 1159) appears for an operator-dialed multidigit call-back call to a hotel when special billing is requested.

The signaling information for service codes is in the following format: KP+(NPA)+3/4/5-digit code+ST. This information includes a Numbering Plan Area (NPA) code only if a call originates overseas.

Typically, the queuing category for calls handled using service codes depends on the call type assigned to each call. The call type is based on trunk group and signaling information.

The Digit Translation Routing to TOPS (TOPS) table specifies the following information for service codes and other types of calls handled by the Traffic Operator Position System.

- the message to be displayed on the Operator Position CRT to identify the call type. The Operating Company can use the standard messages provided by the TOPS program or another message (6-character message maximum)
- whether an AMA record should be generated for the call type
- the type of queue in which the call should be placed, i.e., General (GEN), transfer 1 (XFR1), transfer 2 (XFR2), CAMA, or recall 1, 2, or 3.

TOPS Call Processing Features (Connected Calls) (continued)

The following exhibit shows how the TOPS table can be set up.

MAP example display for table TOPS

```
 CO          DISPLAY        NOAMA        POSTYPE
-------------------------------------------------
RCAMA     C   RCAMA            N            GEN
411       C   411              N            GEN
RCAMA     C   RCAMA            N            GEN
MOBILE    C   MOBILE           N            GEN
611       C   611              N            GEN
181       S                    Y            GEN
121       S                    Y            GEN
OA        S                    Y            GEN
DD        S                    Y            GEN
1159      S                    Y            GEN
```

BR0224 - Two-Way Operator Office Trunk (TWOOT)

A Two-Way Operator Office Trunk (TWOOT) is a tandem-connecting trunk that connects an EO and a tandem office. Two-way TOPS and Operator (TRKGRP OP) trunks are now used primarily for this type of interconnection.

Originally, TWOOT were used to provide interconnection between TOPS and a Community Dial Office (CDO), allowing office subscribers to dial 0 to reach an operator. TWOOT allowed the CDO to use combined, two-way trunk groups that could carry traffic originating from many different stations, such as coin, hotel, and non-coin.

Kick pulse discrimination was used to distinguish the Operator-Assisted (0+) and the Direct Dialed (0-) traffic carried on the trunk groups from those CDO that could not generate the appropriate start signals for these calls. If 0- calls were also carried on the trunk groups, a 4-second time-out was used to distinguish these calls from the rest of the traffic.

> ***Note:*** To use the 4-second time-out to distinguish 0- calls from the other traffic on a TWOOT, the value in the TIMEOUT field of the TOPS Trunk Group (TRKGRP) table must be Y (yes). Setting this field to Y also implies that the pulse type used on the TWOOT is Dial Pulse (DP).

Operator-Assisted (OA) calls were marked as such by the tandem because of the kick pulse (1) that preceded the called number digits (7 or 10). The kick pulse replaced the 0 dialed by the subscriber.

TOPS Call Processing Features (Connected Calls) (continued)

When the tandem received the 8 or 11 digits for the call, it stripped the 1 from the rest of the digits and marked the call as OA in the pretranslator. If the tandem did not receive the kick pulse for a call, that call was considered a 1+ call and marked as a DD call in the pretranslator.

CDO that did not use kick pulse discrimination either put the 1+, 0+, and 0- traffic on separate trunks groups or used special subscriber-dialed prefixes to distinguish the traffic.

Table TRKGRP (OP)

Two-way TOPS or Operator (OP) trunk groups are now used primarily instead of Two-Way Operator Office Trunks (TWOOT).

The Trunk Group (TRKGRP) table for the operator trunk group type (OP) handles incoming operator and verification calls and routes outgoing calls to the Traffic Operator Position System (TOPS) or to another operator system. The TRKGRP (OP) table can be set up as follows:

MAP example display for table TRKGRP (OP)

```
 GRPKEY                                                    GRPINFO
-------------------------------------------------------------------
OGEACAR3  OP 0 TLD NCRT NIL MIDL NCN  MIX REV TERMHOLD OG N
OGEACAR4  OP 0 TLD NCRT NIL MIDL COIN MIX REV TERMHOLD OG N
```

Table TRKGRP (TOPS)

The TOPS Trunk Group (TRKGRP) table is required in a DMS-200 toll switch or in a DMS-100/200 local/toll switch to handle incoming traffic that requires the following:

- operator intervention
- recording on the Centralized Automated Message Accounting (CAMA) tape
- operator intervention and recording on CAMA tape.

The TOPS TRKGRP table can be set up as follows:

TOPS Call Processing Features (Connected Calls) (continued)

MAP example display for table TOPS TRKGRP

```
GRPKEY                                                GRPINFO
-------------------------------------------------------------
TOPCOMAMF
  TOPS 0 NPDGP NCRT IC MIDL 919 TOP1 NLCA NSCR Y SP COMBINED
  Y Y 0  BELL  10  2  2 N
TOPCOMBMF
  TOPS 0 NPDGP NCRT IC MIDL 919 TOP2 NLCA NSCR Y SP COMBINED
  Y Y 0  BELL  3   5  2 N
```

Table TRKSGRP

The Trunk Subgroup (TRKSGRP) table lists supplementary information for each trunk group defined in the Trunk Group (TRKGRP) and TOPS Trunk Group (TRKGRP) tables. The TRKSGRP table can be set up as follows:

MAP example display for table TRKSGRP

```
SGRPKEY CARDCODE
                                                        SGRPVAR
-------------------------------------------------------------
   TOPCOMAMF 0   DS1SIG
STD  IC    MF    WK   N   5   5   EI   NO   N   N    N   M
   TOPCOMBMF 0   DS1SIG
STD  IC    MF    WK   N   5   5   EI   NO   N   N    N   M
   OGEACAR3  0   DS1SIG
STD  OG    MF    WK   7   0   NO  EI   N    N   N    70
   OGEACAR4  0   DS1SIG
STD  OG    MF    WK   7   0   NO  EI   N    N   N    70
```

BR0776 - 0+ Local Calls on DMS-200 TOPS

The 0+ Local Calls on DMS-200 TOPS feature allows an Operating Company to route 0+ local calls to a Traffic Operator Position System (TOPS).

> ***Note:*** Because 0+ local calls are not presently handled at the Operator Position, the implementation of BR0776 creates additional call traffic at the position.

BR0776 allows calls to local numbers to be dialed as 0+ calls and billed to either a credit card, using the Mechanized Calling Card Service (MCCS), or a third number.

TOPS Call Processing Features (Connected Calls) (continued)

A 0+ local call is handled as any other toll call presented at a DMS-200 TOPS, but it is billed at a flat rate charge for a local call. When a 0+ local call arrives at the Operator Position, the digits of the called number are displayed on the Operator Position CRT and the number is identified as a 0+ local call.

Office parameter TOPS_0PLUS_LOCAL specifies for which type(s) of call(s) 0+ local dialing is allowed.

Office parameters

The TOPS_0PLUS_LOCAL office parameter, in the OFCENG table, specifies whether 0+ local calls are accepted at an Operator Position or routed to a Operating-Company-defined treatment, which is set up using the Prefix Treatment (PFXTREAT) table.

The valid entries for this parameter are COIN, HOTEL, STATION, and RESTRICT. The TOPS_0PLUS_LOCAL parameter can be set to one, all, or any combination of these entries, or it can be set to the default entry (NONE).

The TOPS_0PLUS_LOCAL parameter is interpreted by the TOPS program as follows. If a 0+ call originates from a coin station and this parameter is set to COIN, the call is allowed and the call number type for this call is set to local. If, however, the parameter was not set to COIN, the call is routed to treatment.

If the TOPS_0PLUS_LOCAL parameter is set to one, all, or any combination of the valid entries and TOPS cannot determine the type of an incoming call (e.g., because of an ANI failure), the call is routed to an operator. However, if the parameter is set to NONE and TOPS cannot determine the type of an incoming call, that call is sent to a treatment.

The OFCENG table lists the office parameters whose values are defined by the Operating Company. Table OFCENG can be set up as follows:

TOPS Call Processing Features (Connected Calls) (continued)

MAP example display for table OFCENG

```
   PARNAME                                          PARMVAL

-------------------------------------------------------------
   AMA_FAILURE_FREE_CALL                            N
   COINDISPOSAL                                     IGNORE_COIN
   DEF_AMR5_CAT_CODE SMALL_DIGIT_REGISTER           000
   INWATS_ON_AMA                                    N
   PLUS48V_OVERTIME_COIN_TEST                       N
   TOPS_NUM_RU                                      100
   TOPS_NUM_CAMA_RU                                 100
   TOPS_0PLUS_LOCAL                                 COIN
   TOPS_OFFICE_TYPE                                 TOPS200
   TOPS_MAX_OPERATOR_NUM                            299
   TOPS_NUM_STUDY_REG                               10
   TOPS_NUM_TRAFFIC_OFFICES                         2
   TOPS_THRESHOLD                                   50
   TOPS_MAX_ORIG_RATE_CENTER                        5
   TOPS_MAX_TERM_RATE_CENTER                        6
```

AF0171 - NPA on 0+ Seven-Digit Local Calls

AF0171 inserts the NPA of the called party into the AMA records generated for 0+ seven-digit local calls.

A Local Calling Area (LCA) is composed of those exchanges (NXX) that can be dialed as non-toll calls from a given exchange.

Normally, an LCA is within a single Numbering Plan Area (NPA), in which case the NPA of the LCA where the called party resides is easy to determine. However, some Local Calling Areas are at the boundary of one or more exchanges in multiple Numbering Plan Areas. In this case, it is more difficult to determine the appropriate NPA of the called party.

AF0171 provides the NPA of the called party for the Operating Company by inserting this information into the AMA record for 0+ seven-digit local calls.

When a subscriber dials a 0+ seven-digit local call (0+NXX-XXXX), the call is routed to TOPS for operator assistance and billing. Existing translations in the DMS switch allows proper routing of local calls to a location in either the Home NPA (HNPA) or a Foreign NPA (FNPA). The NPA (originating) of the calling party is the HNPA, and the NPA (terminating) of the called party, if different from the HNPA, is the FNPA.

TOPS Call Processing Features (Connected Calls) (continued)

The following figure shows an example of an LCA on the boundary of one or more exchanges in multiple Numbering Plan Areas.

Local Calling Area - Multiple Numbering Plan Areas

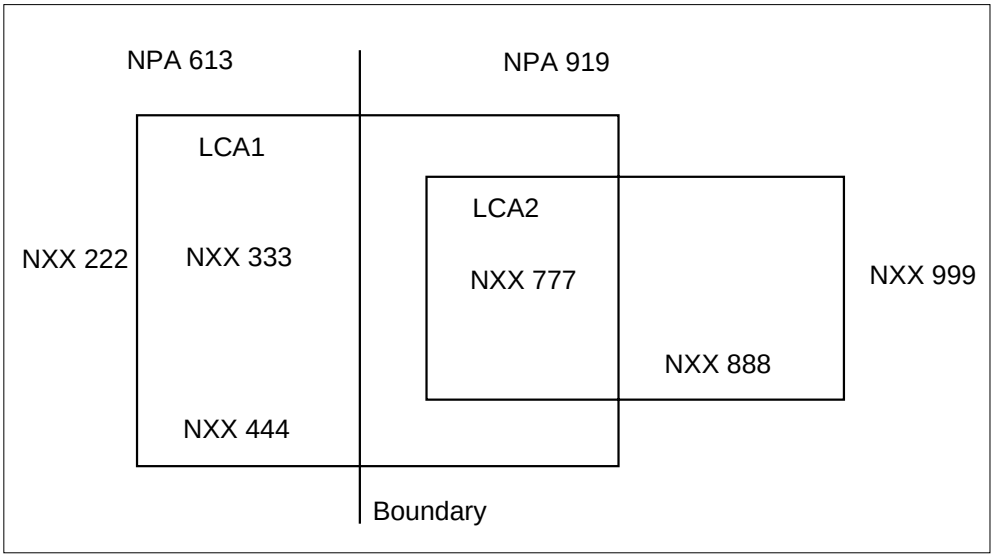

Using the information in the previous figure, assume that a calling party is dialing from exchange 777. Based on this information, the calls described in the following table can be made.

Example Dialing - LCA in Multiple Numbering Plan Areas

Called NXX	Type of call	Digits dialled	Digits in AMA record	Explanation
222	Toll	1+613+222+XXXX	613 222XXXX	This call is toll because NXX 222 is outside of both Local Calling Areas. Also, because NXX 222 is in an FNPA, the calling party must dial the terminating NPA (613). AF0171 does not affect toll calls.
333	Local	0+333+XXXX	613 333XXXX	This call is local because NXX 333 is inside LCA1, which includes NXX 777.
444	Local	0+444+XXXX	613 444XXXX	This call is local because NXX 444 is inside LCA1, which includes NXX 777.

TOPS Call Processing Features (Connected Calls) (continued)

Example Dialing - LCA in Multiple Numbering Plan Areas

Called NXX	Type of call	Digits dialled	Digits in AMA record	Explanation
888	Local	0+888+XXXX	919 888XXXX	This call is local because NXX 888 is inside LCA2, which includes NXX 777.
999	Toll	1+999+XXXX	919 999XXXX	This call is toll because NXX 999 is outside of both Local Calling Areas. However, because NXX 999 is in the same NPA (HNPA) as NXX 777, the calling party does not have to dial the terminating NPA. AF0171 does not affect toll calls.

The FNPA7DIG table specifies the terminating NPA for those exchanges (NXX) that can be called as local calls from a different NPA. To allow a calling party to make the local calls specified in the previous table, the FNPA7DIG table is datafilled as shown in the following example. Only those exchanges (terminating NXX) in a different NPA need to be datafilled, so the table does not contain NXX 888.

MAP display example for table FNPA7DIG

```
ORIGSTS    FROMNXX   TONXX   TERMNPA
_____________________________________________________________
919        333       335     613
919        444       448     613
```

AF0171 accesses the FNPA7DIG table at the end of call processing, just before the information needed to generate the billing record is sent to the AMA system. At this point during call processing, the call has already been screened and allowed to route as a valid local call.

AF0171 indexes the FNPA7DIG table using a key, which includes the originating NPA (919) and the terminating NXX (333). If any part of the key is not in the FNPA7DIG table, AF0171 continues processing as if the called party is in the same NPA as the calling party and inserts the HNPA into the AMA record for the call.

BR35939 - Do not send DA_SERV HOBIC records (BCS36)

This PRSDOC can stop sending of hotel billing information center (HOBIC) records for all DA (directory assistance) calls.

For this activity, DA calls are calls assigned a DASERV or INTCSERV service type, but not calls with a call origination type of CO_INTC in table TOPS. This is because INTCSERV may be used for true DA calls. The CO_INTC call origination type is used for true Intercept calls (regardless of the service type) and this activity does not apply to true Intercept calls.

DA calls also include calls receiving a Queue Management System (QMS) service with a base service type of DASERV (as datafilled in table TQMSSERV for offices with QMS). See feature AF2875 (QMS Call Queue Assignment) in package QMS Host/Remote Queueing, OSB00101.

This change applies to the entire office; i.e., DA HOBIC records are either sent to all HOBIC devices, as before this activity, or they are not sent to any of the HOBIC devices. HOBIC devices mentioned in this PRSDOC include all Autoquote (AQ), Voicequote (VQ), and Record devices (REC).

New parameter SEND_DASERV_HOBIC_RECORDS

A new parameter is introduced in table VROPT, called SEND_DASERV_HOBIC_ RECORDS. If the parameter is set to Y (default) then all HOBIC records are sent as before this PRSDOC.

If the parameter is set to N then no call originated from a Hotel line assigned a service of DA generates a HOBIC record. Setting this new parameter to N does not affect HOBIC records generated for TA (Toll and Assist) calls.

Regardless of how the parameter is set, the AMA records generated within the DMS remain unchanged.

It is expected that the primary use of this new parameter is for offices which handle all DA traffic with MPX/AOSS positions. With these position types a billable DA call requires entry of a room number to satisfy AMA, but the MPX/AOSS position does not support entering the room number. Thus, the HOBIC record generated and sent to the HOBIC devices does not include the room number information. With this configuration, Operating Companies normally bill hotels in bulk for DA calls via AMA records generated within the DMS. The PBX systems within the hotels are capable of knowing that a 411/555 call was made and from which room. This information is used to bill their customers.

CH20173 - Calls drop on tandem to TOPS (BCS36)

This activity provides a datafillable parameter in table TRKGRP which controls the duration of the zip tone request wink sent by the TOPS switch.

When TOPS Operator Number Identification (ONI) trunks are in use, certain parameter combinations allow the TOPS switch to send a wink to the end

TOPS Call Processing Features (Connected Calls) (continued)

office. This wink requests a repeat of the zip tones, which indicate to the operator if the call is from a coin or non-coin phone. These zip tones are only necessary when equipment is in use which does not send coded start pulses to the TOPS switch. The coded start pulses are normally used to indicate if the call is from a coin phone or a non-coin phone.

Prior to this activity, the zip tone request wink duration was hard-coded at 450 milliseconds. This duration was too long for some end office equipment, and the slow wink was detected in the end office as an on-hook. As a result, calls were being taken down prematurely. Hence, it is necessary to allow datafilling this wink duration.

This activity allows datafilling the zip tone request wink duration on a trunk group basis. In table TRKGRP, when a TOPS ONI trunk is datafilled, the craftsperson is prompted for an additional parameter, TRWKTIME (Tone Repeat Wink Time). A value from 10 to 500 milliseconds may be datafilled. The default is 450.

Field TRWKTIME should datafill with a time in milliseconds that is short enough to be interpreted as a wink by the equipment in the end office connected via the trunk group.

When dump and restore is performed and the dump BCS is less than 36, default value 450 is restored into field TRWKTIME for TOPS ONI trunks.

The new field, TRWKTIME, appears immediately after the TONEREPT field when the CLGID field is set to ONI. Following is a tuple from table TRKGRP with the tone repeat wink time set to 250 milliseconds.

Tuple from table TRKGRP

```
GRPKEY
GRPTYP TRAFSNO PADGRP NCCLS                          GRPINFO
-------------------------------------------------------------------------
TGENIC3
TOPS 0 TLD NCRT IC MIDL 629 PTOP NLCA NSCR Y SP COMBINED N Y 0 0000 ONI 16
AT 250  N  N
```

BQ11959 - AIN 0.1 Routing to TOPS extension (BCS36)

The capability routes Advanced Intelligent Network (AIN) 0.1 operator requested calls to TOPS.

An AIN 0.1 call that has sent a query to an off-board processor (e.g., Service Control Point (SCP) / Adjunct) may receive a response indicating the call is to

be routed to an operator. Then, the following applicable operator requested numbers are sent:

- No Address Present, Operator Requested
- National Number, Operator Requested
- International Number, Operator Requested

Routing of these operator requested AIN calls is only supported to a DMS TOPS position.

The following screening on the number of ANI spill digits on the outgoing OP trunk is performed.

Screening the number of ANI spill digits on the outgoing OP trunk

Number of ANI spill digits on outgoing OP trunk	Signaling protocol		
	BELL	*OSS 1*	*EAOSS*
0	SSP based	SSP based	SSP based
3		II + 0D ANI spill	II + 3D ANI spill
6		II + 0D ANI spill	II + 3D ANI spill
10		II + 7D ANI spill	II + 10D ANI spill

Note 1: BELL signaling only allows an ANI I digit, which AIN does not support.

Note 2: In BCS36 of AIN 0.1, a 6-digit charge number is not supported. Until it is, the SSP based ANI spill overrides the SCP ANI information. The table shows the signaling when a 6-digit charge is not supported.

TOPS Inter-LATA Carrier Services (TICS)

A call that requests a carrier operator may be routed to a TOPS position and handled by that operator if the TICS (TOPS Inter-LATA Carrier Services) software package (TOPS Interlata Carrier, OSEA0101) is present at the TOPS switch and the carrier has contracted out the operator services to the Operating Company.

Customized ANI II Display at TOPS

It is possible to customize the ANI display at the TOPS position for certain restricted billing types, by mapping an eight character alphanumeric display to the ANI II digits for certain Calling Numbers. This is shown in the example

TOPS Call Processing Features (Connected Calls) (continued)

datafill below. The restricted billing types that this applies to are listed in “Limitations and restrictions."

Example datafill for a customized ANI display

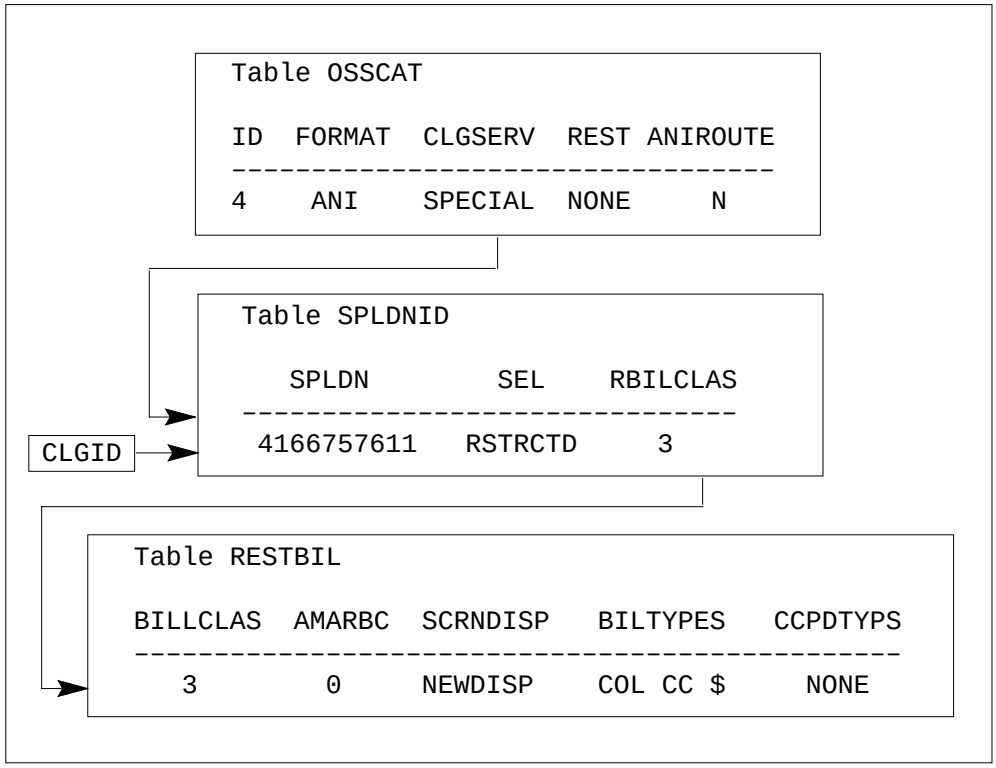

Table OSSCAT is used for any of the OSS, Operator Services Signaling formats which use ANI II digits.

Translations table flow

The TOPS Call Processing Features (Connected Calls) translation process is shown in the flowchart that follows.

TOPS Call Processing Features (Connected Calls) (continued)

Table flow for TOPS Call Processing Features (Connected Calls)

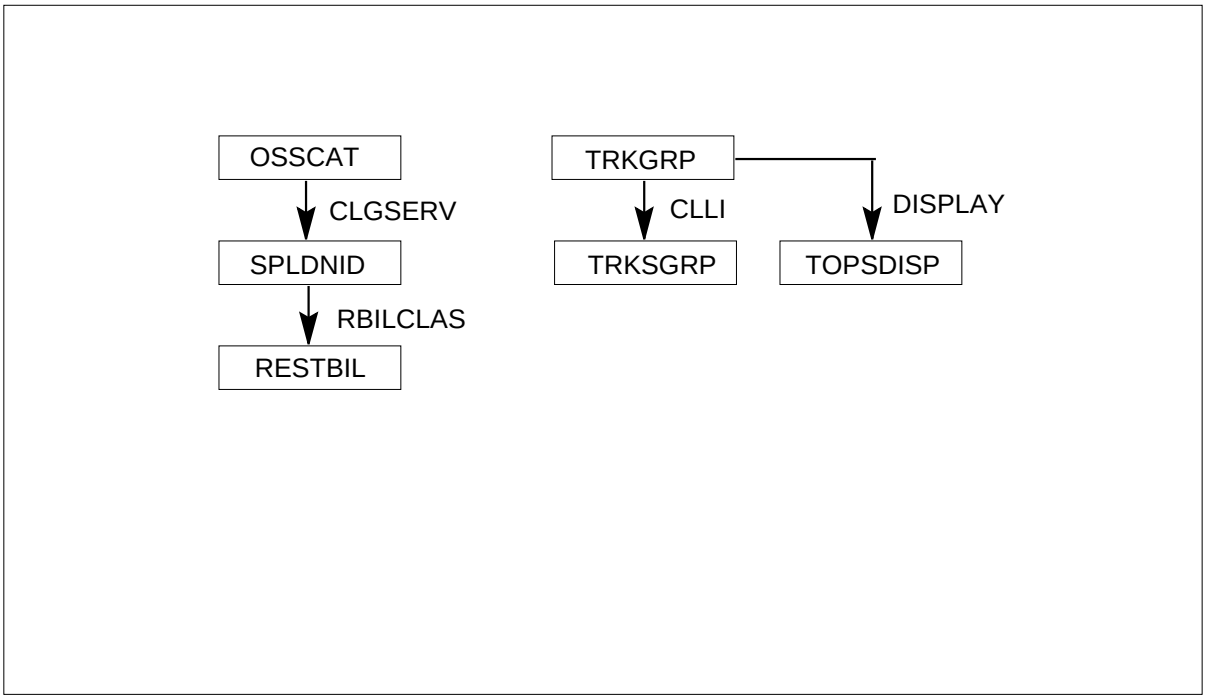

Limitations and restrictions

The following limitations and restrictions apply to TOPS Call Processing Features (Connected Calls):

BR0224 - Two-Way Operator Office Trunk (TWOOT)

A 0+ local call cannot be carried on a coin, hotel, or single-party line to the Operator Position. Any attempt to use such lines for this purpose results in the call being routed to treatment. BR0776 works only for 0+ local calls carried on trunks to TOPS.

AF0171 - NPA on 0+ Seven-Digit Local Calls

AF0171 is invoked only when a call is marked as a local call during translations.

AF0171 applies only to offices using the Bellcore (BC) AMA billing record format.

The FNPA7DIG table must be capable of specifying any of the 160 possible NPAs that can be served by a traffic office, even though the maximum number of NPA that can actually be served by a traffic office is 16.

TOPS Call Processing Features (Connected Calls) (continued)

The Operating Company must ensure that the FNPA7DIG table contains the proper datafill for the following reasons:

- AF0171 always inserts the NPA of the called party into the AMA record generated for a 0+ seven-digit local call.
- When an AMA record is generated for a 0+ seven-digit local call, the NPA inserted into the record for that call is the HNPA if there is no entry (TERMNPA) in the FNPA7DIG table corresponding to the key used to access the table.

BQ11959 - AIN 0.1 Routing to TOPS extension (BCS36)

Routing to the TOPS position must be over trunks, whether from separate switch or a DMS-100/200 (using a looparound configuration). Outgoing OP (operator) and incoming TOPS trunk group types with OSS (Operator Services Signaling) and EAOSS (Exchange Access Operator Services Signaling) support the routing of the AIN call to the TOPS position.

The OSS signaling supports the propagation of ANI II digits, as well as 0 or 7-digit ANI spill.

The EAOSS signaling supports the propagation of ANI II digits, as well as 0, 3- or 10-digit ANI spill.

Following are references for OSS and EAOSS signaling:

- TOPS Call Processing (Calls connected to a TOPS position), OSB00101 for traditional OSS signaling.
- TOPS EAOSS, OSEA0101
- Base TOPS Equal Access, OSEA0101 - TOPS EA for OSS signaling
- EAEO for OSS signaling in NTP 297-2101-352, EA Translations Guide

Customizing the ANI II display at the TOPS position can only be done for the following restricted call types:

- PD - Station Paid or Person Paid
- COL - Collect
- CC - Credit Card
- 3RD - Third Party Billing
- SPLCLG - Special Billing Number by Calling Party
- SPLCLD - Special Billing Number by Called Party

The following call type may also be handled by the TOPS position, but customizing the ANI display is not possible.

Call back

AIN AMA record generation is overridden for responses with both an Operator requested CalledPartyID and an AMAslpID. Any AMA record generation for Operator Assisted (OA) types of calls is the responsibility of the TOPS position.

Interactions

The following paragraphs describe the interactions between TOPS Call Processing Features (Connected Calls) and other functionalities.

BR0224 - Two-Way Operator Office Trunk (TWOOT)

The Mechanized Calling Card Service (MCCS) feature is affected by BR0776 because 0+ local calls are no longer screened before reaching this feature. Thus, the MCCS software now checks for local called number types and routes and performs billing restrictions for 0+ local calls in the same manner as for toll calls. Refer to Exchange Alternate Billing Service (MCCS), ABS00101, for a description of the MCCS features.

AF0171 - NPA on 0+ Seven-Digit Local Calls

AF0171 does not affect the way 0+ seven-digit local calls are handled. Only the AMA records generated for these calls are modified to include the NPA of the appropriate called party.

Activation/deactivation by the end user

TOPS Call Processing Features (Connected Calls) requires no activation or deactivation by the end user.

Billing

TOPS shares the Automatic Message Accounting (AMA) billing system used by the DMS-200 tandem switch. The AMA record formats supported by

TOPS Call Processing Features (Connected Calls) (continued)

TOPS are Bellcore (BC) and Northern Telecom (NT). Records in these formats are generated for answered (completed) TOPS calls.

- Bellcore Format
  - — structure codes - 00700 through 00734 or 04700 through 04734
  - — call codes - 006, 009, 010, 014, 015, 016, 017, 018, 019, 022, 023, 024, 027, 028, 029, 033, 035, 043, 044, 054, 055, 057, 058, 074, 107, 108, 250, 251
- Northern Telecom Format
  - — Direct Distance Dialing (DDD) records
  - — Direct Dial Overseas (DDO) records
  - — extension records (hotel, charge, charge adjust, and special billing)

Note: The TOPS AMA (TOPSAMA) table specifies for which unanswered TOPS calls AMA records should be generated. This table works in conjunction with office parameter NO_ANS_CALLED_ONTAPE of the Engineered Office Parameter (OFCENG) table. Refer to *Office Parameters Reference Manual* for a description of this parameter.

BR0776 uses the BC or NT AMA record formats for flat-rate calls. AF0171 uses only the BC AMA record format for flat-rate calls. The BC AMA records for BR0776 and AF0171 use call code 015 (Station Special Calling) and structure codes 00718 through 00723, depending on the type of origination, such as coin or hotel.

Note: The AMA records generated for AF0171 include the NPA of the called party.

Billing office parameters

The following office parameters are for TOPS AMA billing.

- TOPS_OFFICE_TYPE - This office parameter specifies the Automatic Number Identification (ANI) spill format, DMS-200 or DMS-250, to be used by the switch. Refer to “BV0341, BV0153, BV0278, BV0152, BV0340, BV0339 - 1+, 0+, 0- Calls to DMS-200 TOPS" for a description of the ANI spill for different call types. The OFCENG table contains this parameter.
- AMA_EQUIPPED - This office parameter indicates that a DMS-200 switch includes the OSB00101 group and the AMA feature. The OFCOPT table contains this parameter.

TOPS Call Processing Features (Connected Calls) (continued)

- AMA_FAILURE_FREE_CALL - This office parameter provide routing options that can be used to charge toll calls during AMA problems or failure. The OFCENG table contains this parameter.
- AMA_FAILURE_ROUTE_POSITION - This office parameter specifies the position in the POSITION table to which all AMA failure calls (CAMA and LAMA) are routed. The OFCVAR table contains this parameter.
- CAMA_SUSP_CALL_ALLOWED - This office parameter specifies whether calls proceed without billing or operator intervention when

TOPS Call Processing Features (Connected Calls) (continued)

CAMA is suspended for the following type of calls: 1+ CAMA, 1+ coin, and 1+ hotel. The OFCVAR table contains this parameter.

Station Message Detail Recording

TOPS Call Processing Features (Connected Calls) does not affect Station Message Detail Recording.

Datafilling office parameters

The following table shows the office parameters used by TOPS Call Processing Features (Connected Calls). For more information about office parameters, refer to *Office Parameters Reference Manual*.

TOPS Call Processing Features (Connected Calls) (continued)

Office parameters used by TOPS Call Processing Features (Connected Calls)

Table name	Parameter name	Explanation and action
OFCENG	TOPS_NUM_CAMA_RU	This office parameter specifies the quantity of CAMA/TOPS recording units required.
OFCENG	TOPS_0PLUS_LOCAL	The TOPS_0PLUS_LOCAL office parameter, in the OFCENG table, specifies whether 0+ local calls are accepted at an Operator Position or routed to a Operating-Company-defined treatment, which is set up using the Prefix Treatment (PFXTREAT) table. The valid entries for this parameter are COIN, HOTEL, STATION, and RESTRICT. The TOPS_0PLUS_LOCAL parameter can be set to one, all, or any combination of these entries, or it can be set to the default entry (NONE). The TOPS_0PLUS_LOCAL parameter is interpreted by the TOPS program as follows. If a 0+ call originates from a coin station and this parameter is set to COIN, the call is allowed and the call number type for this call is set to local. If, however, the parameter was not set to COIN, the call is routed to treatment. If the TOPS_0PLUS_LOCAL parameter is set to one, all, or any combination of the valid entries and TOPS cannot determine the type of an incoming call (e.g., because of an ANI failure), the call is routed to an operator. However, if the parameter is set to NONE and TOPS cannot determine the type of an incoming call, that call is sent to a treatment. Office parameter TOPS_0PLUS_LOCAL specifies for which type(s) of call(s) 0+ local dialing is allowed. This parameter is in the Engineered Office Parameter (OFCENG) table.

The OFCENG table lists the office parameters whose values are defined by the Operating Company. Table OFCENG can be set up as follows:

TOPS Call Processing Features (Connected Calls) (continued)

MAP display example for table OFCENG

```
PARNAME                                                    PARMVAL
-------------------------------------------------------------------------
AMA_FAILURE_FREE_CALL                                      N
COINDISPOSAL                                               IGNORE_COIN
DEF_AMR5_CAT_CODE SMALL_DIGIT_REGISTER                     000
INWATS_ON_AMA                                              N
PLUS48V_OVERTIME_COIN_TEST                                 N
TOPS_NUM_RU                                                100
TOPS_NUM_CAMA_RU                                           100
TOPS_0PLUS_LOCAL                                           COIN
TOPS_OFFICE_TYPE                                           TOPS200
TOPS_MAX_OPERATOR_NUM                                      299
TOPS_NUM_STUDY_REG                                         10
TOPS_NUM_TRAFFIC_OFFICES                                   2
TOPS_THRESHOLD                                             50
TOPS_MAX_ORIG_RATE_CENTER                                  5
TOPS_MAX_TERM_RATE_CENTER                                  6
```

A new parameter is introduced in table VROPT, called SEND_DA_HOBIC_RECORDS. If the parameter is set to Y (default) then all HOBIC records are sent as before this PRSDOC.

If the parameter is set to N then no call originated from a Hotel line assigned a service of DA generates a HOBIC record. Setting this new parameter to N does not affect HOBIC records generated for TA (Toll and Assist) calls.

Datafill sequence

The following table lists the tables that require datafill to implement TOPS Call Processing Features (Connected Calls). The tables are listed in the order in which they are to be datafilled.

Datafill tables required for TOPS Call Processing Features (Connected Calls)

Table	Purpose of table
TRKGRP.TOPS	Trunk Group Type TOPS. This table is required in a toll office with a TOPS DMS-200 switching unit or in a combined local/toll office with a TOPS DMS-100/200 switching unit.
TRKGRP.OP	Trunk Group (TRKGRP) table for the operator trunk group type (OP). Handles incoming operator and verification calls and routes outgoing calls to the Traffic Operator Position System (TOPS) or to another operator system.

TOPS Call Processing Features (Connected Calls) (continued)

Datafill tables required for TOPS Call Processing Features (Connected Calls)

Table	Purpose of table
TRKSGRP	Trunk Subgroup. Contains information about each subgroup associated with a trunk group defined in table TRKGRP.
TRKGRP	Trunk Group. This table contains information about trunk groups.
TOPS	Digital Translation Routing to TOPS table. Defines the messages displayed for certain types of calls, such as coin, hotel, and non-coin, and specifies whether AMA records should be generated for these calls.
TOPSDISP	Expanded Operator Display. Defines special instructional messages, the content of which is based on the incoming TOPS trunk groups to the DMS-200.
OSSCAT	ANI ID Mapping for TOPS TrunkGroups with OSS table
SPLDNID	TOPS Special Directory Number ID. This table is used to specify the Restricted Billing Class (RBC) to be recorded on AMA for Toll and Assist (TA) and Directory Assistance (DA) calls.
RESTBIL	TOPS Restricted Billing. This table is used to specify the Restricted Billing Class (RBC) to be recorded on AMA for Toll and Assist (TA) and Directory Assistance (DA) calls.
FNPA7DIG	Foreign Numbering Plan Area Seven Digits. Specifies the terminating NPA for those exchanges (NXX) that can be called as local calls from a different NPA.
VROPT	Voice Response Options. This table contains parameters required by external voice response units.

Datafilling table TRKGRP (TOPS)

The TOPS Trunk Group (TRKGRP) table is required in a DMS-200 toll switch or in a DMS-100/200 local/toll switch to handle incoming traffic that requires the following:

- operator intervention
- recording on the Centralized Automated Message Accounting (CAMA) tape
- operator intervention and recording on CAMA tape.

Datafill example for table TRKGRP (TOPS)

The following example shows sample datafill for table TRKGRP (TOPS).

TOPS Call Processing Features (Connected Calls) (continued)

MAP display example for table TRKGRP (TOPS)

```
GRPKEY                                                    GRPINFO
_____________________________________________________________________
TOPCOMAMF
  TOPS 0 NPDGP NCRT IC MIDL 919 TOP1 NLCA NSCR Y SP COMBINED Y Y
   0  BELL  10  2  2 N
TOPCOMBMF
  TOPS 0 NPDGP NCRT IC MIDL 919 TOP2 NLCA NSCR Y SP COMBINED Y Y
   0  BELL  3   5  2 N
```

Datafilling table TRKGRP (OP)

The Trunk Group (TRKGRP) table for the operator trunk group type (OP) handles incoming operator and verification calls and routes outgoing calls to the Traffic Operator Position System (TOPS) or to another operator system.

Datafill example for table TRKGRP (OP)

The following example shows sample datafill for table TRKGRP (OP).

MAP display example for table TRKGRP (OP)

```
GRPKEY                                                    GRPINFO
_____________________________________________________________________
OGEACAR3      OP 0 TLD NCRT NIL MIDL NCN  MIX REV TERMHOLD OG N
OGEACAR4      OP 0 TLD NCRT NIL MIDL COIN MIX REV TERMHOLD OG N
```

Datafilling table TRKSGRP

The Trunk Subgroup (TRKSGRP) table lists supplementary information for each trunk group defined in the Trunk Group (TRKGRP) and TOPS Trunk Group (TRKGRP) tables.

Datafill example for table TRKSGRP

The following example shows sample datafill for table TRKSGRP.

MAP display example for table TRKSGRP

```
SGRPKEY CARDCODE
                                        SGRPVAR
_____________________________________________________________________
   TOPCOMAMF 0   DS1SIG
STD  IC    MF    WK   N   5   5   EI   NO   N   N    N   M
   TOPCOMBMF 0   DS1SIG
STD  IC    MF    WK   N   5   5   EI   NO   N   N    N   M
   OGEACAR3  0   DS1SIG
STD  OG    MF    WK   7   0   NO  EI   N    N   N    70
   OGEACAR4  0   DS1SIG
STD  OG    MF    WK   7   0   NO  EI   N    N   N    70
```

Datafilling table TRKGRP

A new field is added to the refinement used by TOPS ONI trunks.

Datafilling table TRKGRP

Field	Subfield or refinement	Entry	Explanation and action
TRWKTIME		10-500 milliseconds (default is 450 milliseconds)	This field appears immediately after the TONEREPT field when the CLGID field is set to ONI.

Datafill example for table TRKGRP

The following example shows sample datafill for table TRKGRP.

Following is a tuple from table TRKGRP with the tone repeat wink time set to 250 milliseconds.

MAP display example for table TRKGRP

```
GRPKEY
     GRPTYP TRAFSNO PADGRP NCCLS          GRPINFO
_____________________________________________________________________
TGENIC3
      TOPS     0     TLD   NCRT  IC  MIDL 629 PTOP NLCA
NSCR Y SP COMBINED N Y  0 0000       ONI 16 AT 250  N  N
```

TOPS Call Processing Features (Connected Calls) (continued)

Datafilling table TOPS

The Digit Translation Routing to TOPS (TOPS) table defines the messages displayed for certain types of calls, such as coin, hotel, and non-coin, and specifies whether AMA records should be generated for these calls.

The Digit Translation Routing to TOPS (TOPS) table specifies the following information for service codes and other types of calls handled by the Traffic Operator Position System.

- the message to be displayed on the Operator Position CRT to identify the call type. The Operating Company can use the standard messages provided by the TOPS program or another message (6-character message maximum)
- whether an AMA record should be generated for the call type
- the type of queue in which the call should be placed, i.e., General (GEN), transfer 1 (XFR1), transfer 2 (XFR2), CAMA, or recall 1, 2, or 3.

Datafill example for table TOPS

The following example shows sample datafill for table TOPS.

MAP display example for table TOPS

```
CO        DISPLAY      NOAMA        POSTYPE
_____________________________________________________________
RCAMA     C    RCAMA   N            GEN
411       C    411     N            GEN
RCAMA     C    RCAMA   N            GEN
MOBILE    C    MOBILE  N            GEN
611       C    611     N            GEN
181       S            Y            GEN
121       S            Y            GEN
OA        S            Y            GEN
DD        S            Y            GEN
1159      S            Y            GEN
```

Datafilling table TOPSDISP

The Expanded Operator Display (TOPSDISP) table defines special instructional messages, the content of which is based on the incoming TOPS trunk groups to the DMS-200. These messages, which may be the NPANXX code of the trunk or a mnemonic indicating the trunk type, consist of up to six characters and appear in conjunction with the CLG # message.

The value in the DISPLAY field of the TOPS TRKGRP table is an index into the TOPSDISP table (DISP_NO field).

This table lists all NXX central office codes, special billing codes, and WATS originating codes allowed for calls on TOPS trunk groups.

Datafilling table TOPSDISP

Field	Subfield or refinement	Entry	Explanation and action
DISPLAY			The Display Originating NPANXX to Operator (NPANXXRQ) field in the TOPS TRKGRP table specifies whether the NPANXX code(s) for a TOPS trunk group should be displayed to the operator. If this field is set to Y (yes), NPANXX information appears on the Operator Position CRT. (Refer to Call Appearance at Operator Position.)
NPANXXRQ			The entry in the NPANXXRQ field of the TOPS Trunk Group (TRKGRP) table determines whether the originating NPANXX is displayed for a trunk group. The NPANXX information comes from the Billing Code (BILLCODE) field of the TOPS Billing Code (TOPSBC) table.

Datafill example for table TOPSDISP

The following example shows sample datafill for table TOPSDISP.

MAP display example for table TOPSDISP

```
DISP_NO          INSTRUCT
_____________________________________________________________
0                  TPCOMF
```

Datafilling table FNPA7DIG

AF0171 inserts the NPA of the called party into the AMA records generated for 0+ seven-digit local calls.

AF0171 is implemented using the FNPA7DIG table that specifies the terminating NPA for those exchanges (NXX) that can be called as local calls from a different NPA.

The key that indexes the FNPA7DIG table consists of an originating NPA and a terminating NXX. The originating NPA is associated with the party (calling)

TOPS Call Processing Features (Connected Calls) (end)

who is placing the call, and the terminating NXX is associated with the party (called) to whom the call is made.

Datafill example for table FNPA7DIG

The following example shows sample datafill for table FNPA7DIG.

MAP display example for table FNPA7DIG

```
ORIGSTS     FROMNXX   TONXX   TERMNPA
_____________________________________________________________
613         737       739     919
613         888       890     919
```

Translation verification tools

TOPS Call Processing Features (Connected Calls) does not use translation verification tools.

SERVORD

TOPS Call Processing Features (Connected Calls) does not use SERVORD.

TOPS Call Processing Features (Global and Mobile)

Ordering codes

Functional group ordering code: OSB00101

Functionality ordering code: not applicable

Release applicability

TOPS15 and up

Prerequisites

To operate, TOPS Call Processing Features (Global and Mobile) requires the following:

- Functionality BAS Generic, BAS00003
- Table TOPSFTR paramter TOPS_ON_OFF_SWITCH = Y

Description

This functionality is provided by the following features:

Feature number	Feature name
BR0203	Mobile Handling (IMTS ROAMER)
BV0232, BV0554, BC0320	International Direct Distance Dialing (IDDD)
AL0610	Expanded FXDNMAP

BR0203 - Mobile Handling (IMTS ROAMER)

A mobile station is any vehicle that is equipped with a telephone. There are two types of mobile calls: Manual and Improved Mobile Telephone Service (IMTS). The principal difference between them is that IMTS provides dialing and disconnect supervision, and Manual does not. Manual Mobile call handling always requires operator assistance in dialing and manual timing of chargeable calls.

IMTS stations placing a call from their home base area are treated as normal noncoin stations. Only 0- and 0+ calls (indicating that operator assistance is required) are routed to an Operator Position. IMTS Roamer stations (stations placing a call from outside their home base area) require operator assistance. When a call from an IMTS Roamer station arrives at an Operator Position, the word “MOBILE" is displayed on the Operator Position CRT. The operator must obtain the calling and called number from the subscriber. Calls billed to a third number or calling card must be manually ticketed.

TOPS Call Processing Features (Global and Mobile) (continued)

Calls to IMTS stations within their home base area can be dialed directly by the subscriber, or arrive at the Operator Position for completion to the directory number (NXX-XXXX) supplied by the subscriber. Calls to a Foreign IMTS Station (IMTS stations from foreign Mobile Base Station areas traveling inside the area served by the local mobile base station) must go through the operator. The call arrives at the Operator Position as an inward call displaying “INW" and “NO AMA". A 10-digit directory number is used instead of the normal 7-digits that are used within the home base area.

The information recorded includes:

- mobile station number
- number of the party placing the call to (or receiving the call from) the mobile station
- number associated with the mobile base station to determine the chargeable distance of the call (mobile base station to fixed calling or called party).

BV0232, BV0554, BC0320 - International Direct Distance Dialing (IDDD)

International Direct Distance Dialing (IDDD) is a feature allowing a subscriber to place calls without operator assistance outside World Zone One (WZ1). TOPS allows the routing of individual, 2-party, multiparty, Private Branch Exchange (PBX), coin, Centrex, and Centrex tie trunk originated calls to the operator system for subsequent completion.

For numbering purposes, the world is divided into eight zones. (WZ3 and WZ4 are considered one zone.) WZ1 includes the following countries: Canada, United States, Mexico, Puerto Rico, and other Caribbean Islands. For more information on World Zones, refer to the following figure . Dialing options comparable to the 1+, 0+, and 0- variations that are used inside WZ1 are provided by access codes 011+, 01+, and 010- respectively. The term IDDD is normally associated with 011+ station-to-station, sent-paid calls outside WZ1.

TOPS Call Processing Features (Global and Mobile) (continued)

World Zone Numbering Plan

Zone Number	Associated Area
1	North America
2	Africa
3 & 4	Europe
5	South & Central America
6	South Pacific
7	U.S.S.R.
8	Far East
9	Middle East & South–East Asia

An End Office (EO) Switching System that consists of a combination of Automatic Message Accounting (AMA) equipment and Automatic Number Identification (ANI) equipment in the same office, and that can automatically process a subscriber-dialed toll call without operator assistance is called a Local Automatic Message Accounting (LAMA) office. When LAMA is not provided, the DMS switch offers IDDD through a Centralized AMA (CAMA) office that can have TOPS. Subscriber routing and charging for IDDD calls from a Central Office (CO) are provided by TOPS. TOPS then forwards the call(s) to a gateway office (a toll office through which calls to/from another country pass), an international carrier office, or to an overseas assistance operator.

The IDDD call type is identified by two or three prefix digits that are dialed before the country code (CC) and the national number (NN). The first digits are the prefix digits 01, which identify the call as being an international call. When 01 is followed by a digit other than a 0 or 1, the call is for overseas operator assistance. A station-to-station sent-paid call is identified by the code 011. For dialing sequence 01N, (where N is not equal to 0 or 1), the 2-digit prefix 01 indicates that the call is operator assisted and the N represents the first digit in the country code.

A country code (1 to 3 digits) identifies the country for which an overseas call is destined. A national number is a uniform or variable quantity of digits that are used when calling within the country to further define the called party. The total quantity of digits allowed for CC + NN, excluding the IDDD prefix code, is 7 to 12 digits. An international telephone number has the following format:

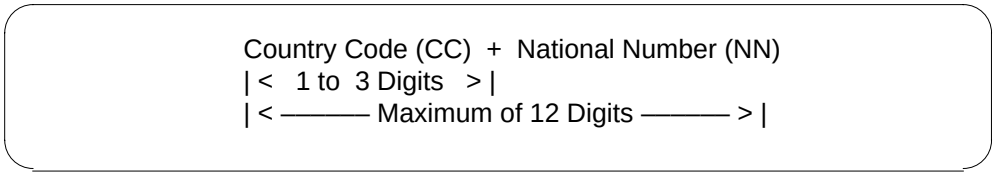

The DMS switch has the capability of screening the country code and routing the call to the toll office and/or gateway for international routing. Any invalid, unauthorized, or default codes are given reorder or an announcement. Refer to the following figure for an example of Country Codes and National Numbers.

Example Country Codes and National Numbers

COUNTRY	COUNTRY CODE (CC)	NATIONAL NUMBER (NN) NO. OF DIGITS
Hong Kong	852	6 to 8
Ireland	353	5 or 6
Israel	972	6 or 7
Japan	81	8 or 9
Switzerland	41	7 or 8
United Kingdom	44	7 to 9
U.S.S.R.	7	8

AL0610 - Expanded FXDNMAP

Currently, TOPS software provides substitute telephone numbers for hotel-originated traffic served by offices such as cross-bar and step-by-step that cannot provide ANI ID digits 6 or 7 in the ANI spill. The traffic from these hotels is trunked to an office capable of providing the proper ANI ID digits for routing 1+ operator traffic. This office then sends the traffic to TOPS.

These calls are sent either on regular TOPS combined trunks with ANI ID digits 6 or 7, or on class of service lookup trunks with ANI ID digit 0. The traffic is sent between the serving office and the intermediate office on foreign exchange (FX) lines; therefore, the ANI spill received by TOPS contains the calling number of the foreign exchange line, rather than the actual directory number.

Once it is determined that a call has originated from a hotel, the information digits and Table SPLDNID are examined, and the calling number is checked in Table FXDNMAP. If there is a match, the actual number found in Table FXDNMAP is substituted for the number received in the ANI spill. Table

TOPS Call Processing Features (Global and Mobile) (continued)

FXDNMAP maps the foreign exchange line numbers received to the actual directory numbers which are then used for billing purposes.

Expanded FXDNMAP enables the substitution of actual billing numbers for FX line numbers on all types of restricted calls including calls from restricted coin stations (prisons, hospitals, etc.). This allows the Operating Company to bill the actual charges for a restricted call on a FX line from a restricted station to the correct directory number.

Operation

BR0203 - Mobile Handling (IMTS ROAMER)

Incoming Call to IMTS Roamer from Land

Calls being placed from nonmobile stations to an IMTS station appear on the Operator Position CRT as 0- calls.

The following steps describe the sequence of activities for an incoming call to an IMTS Roamer.

1. The operator asks the subscriber for the called number (NPA-XXXX).
2. The operator then prefixes the called number with a unique 3-digit number that is dialable only by operators in this toll center (for example, 100).
3. The operator dials the 10-digit number using KP FWD. If the call is ticketed, AMA must recognize 100-NPA-XXXX as a valid CLD number for this office.
4. The DMS switch routes 100-NPA-XXXX on a trunk group to the mobile base station.
5. The DMS switch deletes the 3-digit prefix (100) and outpulses the NPA-XXXX.
6. The mobile base station completes the call on an idle channel to roamer NPA-XXXX.
7. If the mobile base station returns supervision, the system can monitor the trunk for answer (ANS) and disconnect (DISC) and ticket the call automatically. Automatic ticketing requires the number of the mobile

base station, and AMA must recognize the CLD # of 100-NPA-XXXX as a valid CLD # with a home NPA office rating code.

8. If the IMTS station does not return supervision, the operator must put the call on hold and periodically monitor the connection for supervision. When the call is extended, the operator should:
   a. press the No AMA key
   b. record the ticket for billing
   c. press the HOLD key
   d. press the POS RLS key.

The following figure shows the routing capabilities from a nonmobile station to an IMTS station.

Land to IMTS to Land

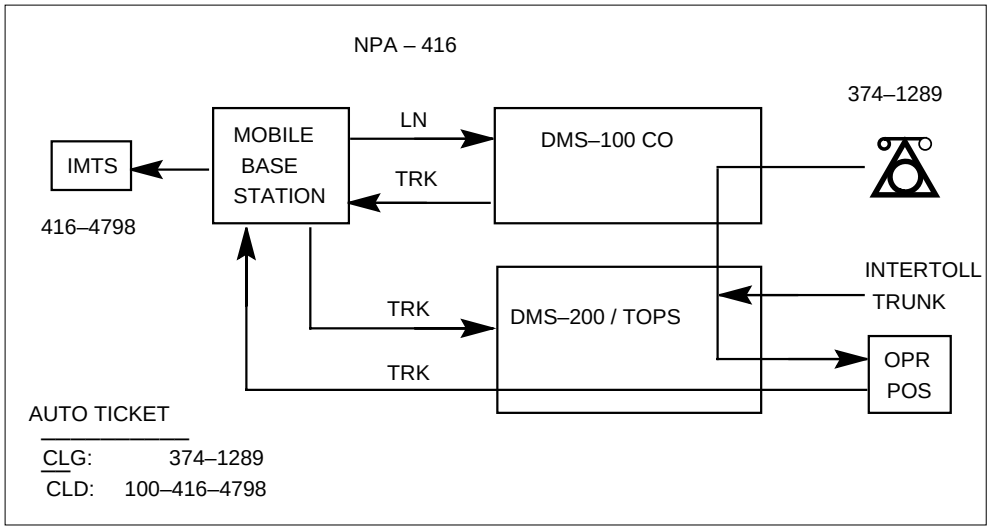

Outgoing Call from IMTS to Land

Calls being placed from an IMTS station to a nonmobile station are treated as normal noncoin stations. Only 0- and 0+ calls indicating that operator assistance is required are routed to an Operator Position.

TOPS Call Processing Features (Global and Mobile) (continued)

The following steps describe the sequence of activities for an IMTS station to place a call to a nonmobile station.

1. The IMTS station places a call using the dialing capabilities provided by IMTS.
2. The IMTS station can place any type of call or dial 0 for operator assistance.
3. The call is then handled as a regular noncoin 0- call, or the operator completes the call normally if assistance was requested.

The following figure shows the routing capabilities of an IMTS station placing a call directly to a local non-mobile station, a foreign station, or to the operator.

IMTS Station to Land

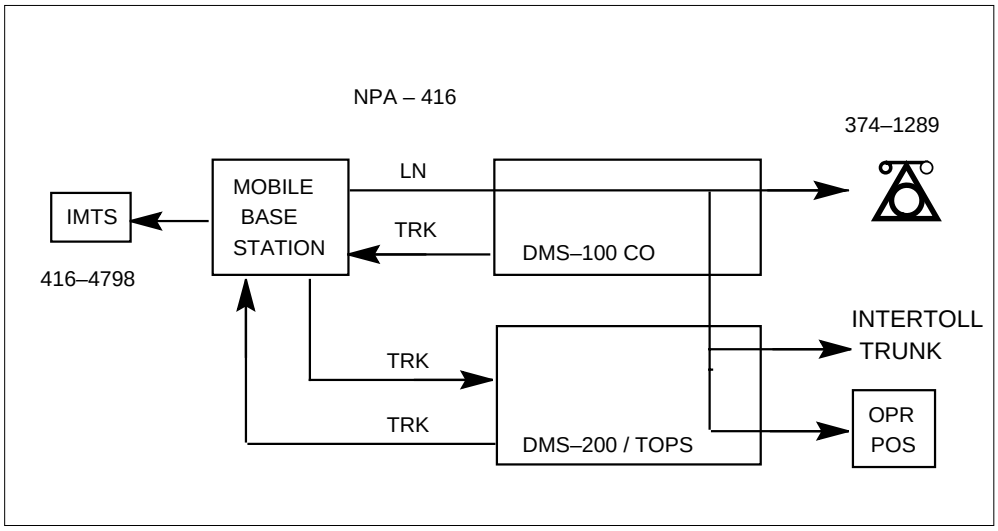

Outgoing Call from IMTS Roamer to Land

A mobile call comes to an Operator Position from an IMTS Roamer based outside the operator's serving area. The calling number input by the operator is a special number that flags this type of call for down-stream processing.

The following steps describe the sequence of activities for an IMTS Roamer to place a call to a nonmobile station.

1. The IMTS Roamer station dials the call from the handset.
2. The mobile base station routes the call to the Mobile Operator.
3. “MOBILE" and “ONI" are displayed on the Operator Position CRT.
4. The operator keys HNPA+NXX+XXXX. This number identifies the mobile base station for charging the call. The NXX should be a valid

office code served by the operator. The XXXX characters identify the mobile base station.

5. The operator then handles the normal 7- to 10-digit called number.
6. If the call is station paid or person paid, the operator should key STA SPL CLG or PER SPL CLG and KP SPL + NPA-NXX-XXXX + START, where NPA-NNX-XXXX is the identification number of the IMTS Roamer.
7. If the call is not station sent paid, the operator completes the call normally.
8. If the mobile base station returns supervision, TOPS can Automatically ticket the call and the operator can press POS RLS to release the call.

The following figure shows the routing capabilities of an IMTS Roamer placing a call directly to a local nonmobile station or to an operator for assistance.

IMTS Roamer to Land

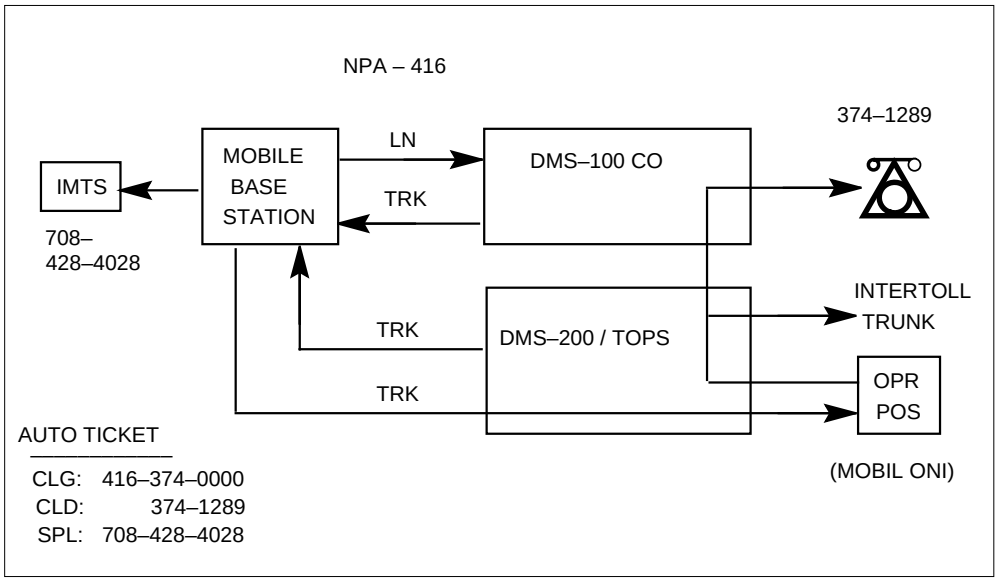

BV0232, BV0554, BC0320 - International Direct Distance Dialing (IDDD)

Subscribers using the IDDD feature from World Zone (WZ1) dial prefix code 01. The digit following this prefix code determines the type of IDDD access. Prefix code 011 is dialed for Direct Distance Dialing (DDD) of station-to-station calls. IDDD calls requiring special billing (person-to-person, calling card, and so on) use a 01N code. Calls requiring operator handling use 010 to reach a domestic operator who provides overseas operator assistance. After the subscriber dials 010, dialing is considered to be complete.

TOPS Call Processing Features (Global and Mobile) (continued)

After the IDDD prefix code has been dialed, the subscriber continues by dialing the country code. The country code consists of one to three digits and identifies the country where the station is located. The subscriber is allowed the same amount of time between dialing the IDDD access code, the country code, and the national number (normal interdigital timing). The national number follows the country code and defines the called station in that country.

Some countries have a uniform numbering plan; therefore, the number of digits to be dialed can be predetermined, and a normal end of dialing determination is possible. Some countries have a variable number of digits in their numbering plan. Subscribers with a Dual-Tone Multi-Frequency (DTMF) phone line (to a suitably equipped EO) can dial a # digit to indicate end of dialing, after at least 7 digits have been dialed. End of dialing also occurs if or when 12 digits are dialed. Otherwise, interdigital timing is necessary to determine end of dialing.

When a call has been properly dialed, it can be routed to TOPS where operator assistance can be provided, if requested. This applies only if the Operating Company is handling the call instead of an InterLATA/International Carrier. The call is then completed, and the called station is signaled. The outgoing trunk is monitored by TOPS for four minutes to ensure completion of the call to the gateway, to the country's access switch, through other switches, and finally, to the called station's line. If there is no answer in this time period, the calling station is given reorder and the connection to the outgoing trunk is released. If the called party answers (satisfies the minimum chargeable duration criteria), an Automatic Message Accounting (AMA) entry is made by TOPS.

Calls routed through an operator system to international destinations have AMA recording functions performed at that operator system. Thus, either Automatic Number Identification (ANI) or Operator Number Identification (ONI) capabilities must be provided by the DMS switch.

When a call requiring calling number information goes to TOPS, TOPS returns an off-hook supervisory state when it is ready to receive this additional information. This off-hook signal is called the ANI request signal and persists until after the calling party disconnects or until a timeout after the called party disconnect is received at TOPS. When the ANI request signal is detected by the EO, the required information is outpulsed using MF (Multi-Frequency) signals in the appropriate format. This MF outpulsing should be used even where the called number was sent by dial pulsing (DP) rather than by MF signaling. Failure to receive all of the ANI digits within interdigital timing after the start identification signal has been returned to the local office results in partial dial irregularity treatment.

TOPS Call Processing Features (Global and Mobile) (continued)

If ANI is not available or ANI failure occurs, ONI call processing procedures are required. Control of the call is then assumed by TOPS.

International calls can be offered to TOPS over combined incoming Centralized AMA (CAMA) and Recording Completing trunk groups. The types of digit signaling supported on the incoming TOPS trunk group for IDDD include Traditional, Interim OSS, and ONI. The incoming digit formats that are recognized are shown as follows:

```
From Step–By–Step (SXS) offices (DP)
      11 + CC + NN for station sent paid calls
      (subscribers prefix code 011)
      1 + CC + NN for operator assisted calls
      (subscriber prefix code 01)

From Common Control Offices (MF)

      KP + 1 + CC + NN + STx

   where 1 denotes international call
         CC = Country Code
         NN = National Number
         and followed by ANI if applicable.

   STx can be ST, STP, ST2P, or ST3P as follows:

      ST    =  011 Direct Dial (DD) Coin
      STP   =  01  Operator Assisted (OA) Coin
      ST2P  =  011 DD Non–Coin
      ST3P  =  01  OA Non–Coin
```

Note: Equal Access Operator Services Signaling (EAOSS) is also supported on the incoming TOPS trunk group for IDDD.

The DMS/TOPS forwards international calls to a carrier using 2-stage Intertoll, Traditional/Interim OSS, or Equal Access Plan (EAP) signaling/outpulsing.

Note: Outpulsing ANI is an option with Traditional/Intermin OSS and EAP.

Traditional and Interim Operator Services Signaling

The first stage outpulsed from the TOPS office on receipt of the first wink signal from the INC (INternational Carrier) is of the format KP + 1 + CC + NN + STx. The second stage outpulsed is of the format KP + ANI + ST if ANI is

TOPS Call Processing Features (Global and Mobile) (continued)

given, where ANI includes one information digit with Traditional OSS and two information digits with Interim OSS. The following figure shows the information outpulsed from TOPS to the INC using Traditional OSS signaling.

Traditional/Interim OSS for International Calls from TOPS

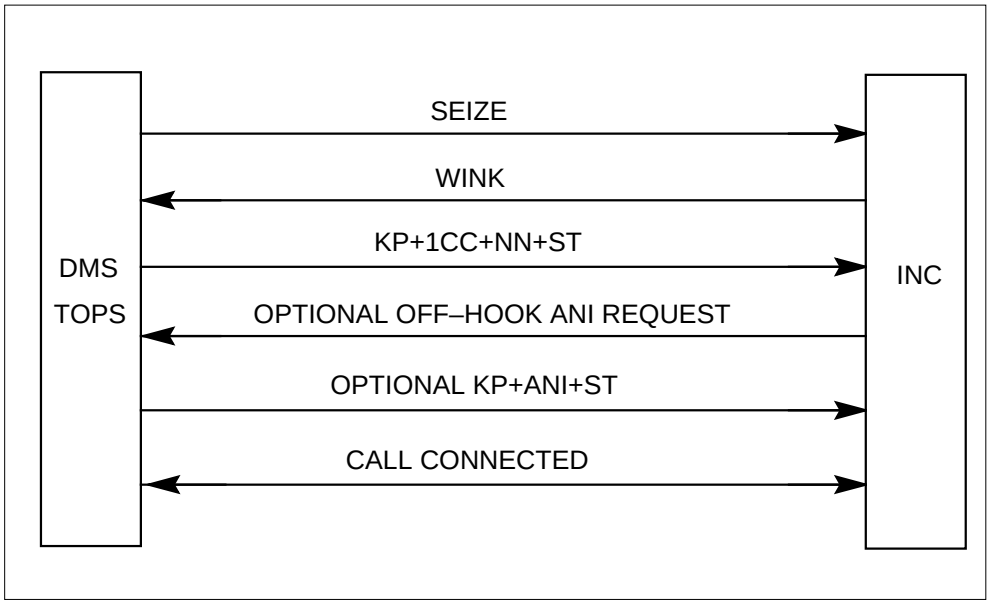

Intertoll Signaling

The first stage outpulsed from the TOPS office on receipt of the first wink signal from the INC is of the format:

```
KP + 1XX + ST or KP + 011 + XXX + ST
```

where:

1XX
is the gateway code

011
is the international identifier

XXX
is a country code up to 3 digits in length

The KP + 1XX + ST format is used when the DMS/TOPS selects the gateway on the basis of the country code translation. The KP + 011 + XXX + ST format is used when gateway selection is made by other toll switchers in the DDD (Direct Distance Dialing) network. The first stage can be omitted if the DMS/TOPS has direct trunks to the gateway switch.

The second stage of outpulsing is of the format KP + CC (or Pseudo Country Code - PCC) + NN + ST and is transmitted end to end to the gateway office on receipt of the second wink or delay dial signal. A Pseudo Country Code (PCC) is used when a call is operator assisted to inform the gateway office to select an appropriate language digit. The following figure shows the information outpulsed from TOPS to the INC using Intertoll signaling.

Intertoll Signaling for International Calls from TOPS

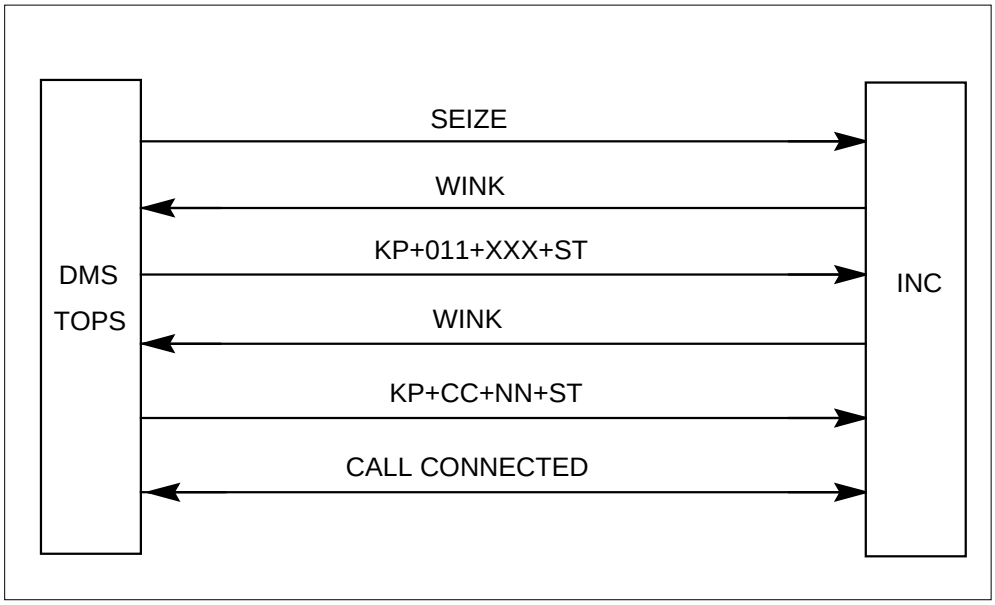

Equal Access Plan (EAP) Signaling

If EAP signaling is used, the TOPS office performs 2-stage outpulsing for international Equal Access (EA) calls routed directly to an INC. During the first stage, TOPS outpulses the appropriate combination of the following digits:

- 1NX or 1N'X
- XXX
- CCC or 000

During phase one of the second stage, TOPS outpulses the ANI digits, including the two information digits. During phase two of the second stage, TOPS outpulses the called number. The following two figures show the information outpulsed from TOPS to the INC.

Note: If the INC does not request ANI spill, TOPS outpulses KP + ST during phase one of the second stage.

TOPS Call Processing Features (Global and Mobile) (continued)

EAP Signaling for International Calls from TOPS

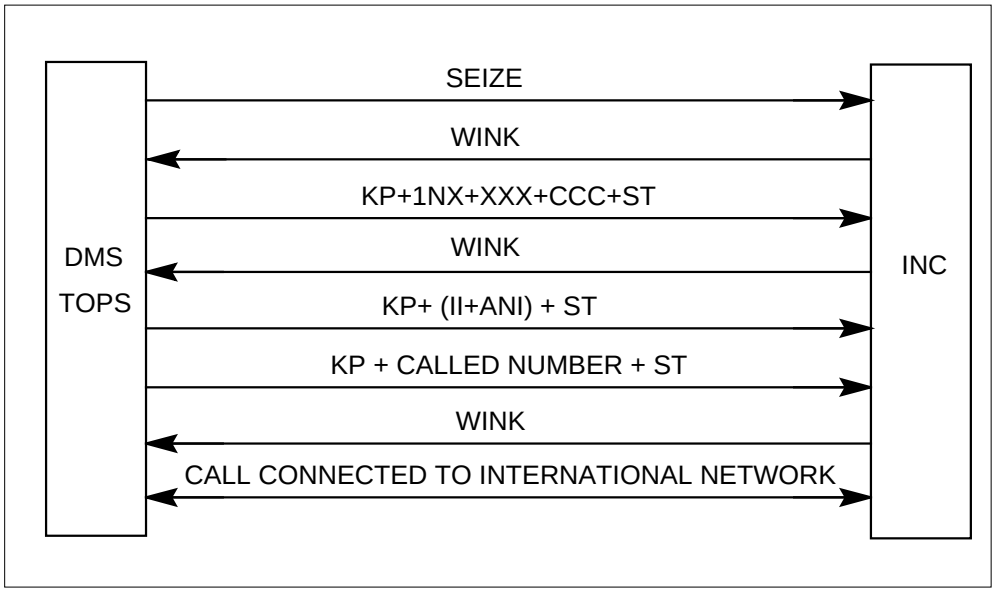

EAP Outpulse Digits (International Outside World Zone 1)

DIGITS DIALED/ DMS CALL TYPE	TOPS OUTPULSING
01+CC+NN	KP+1N'X+XXX+ CCC+ST
International Uses PIC or Default Carrier	KP+(I I +ANI)+ST KP+10D+ST
01+CC+NN	KP+1NX+XXX+ CCC+ST
International DD call	KP+(I I + ANI)+ST KP+CC+NN+ST

TOPS Call Processing Features (Global and Mobile) (continued)

EA Call Progression

The TOPS office performs digit screening for connected carriers to determine whether the digits dialed constitute a valid code. The following translation tables are checked:

- Class of Service Screening (CLSVSCR)
- Country Code Translations (CCTR).

TOPS performs carrier screening to determine whether the carrier can complete the call. The carrier capabilities in the Other Common Carrier Information (OCCINFO) Table are checked. If the carrier can complete the call, a route is selected and the appropriate digits are outpulsed. Otherwise, a treatment is assigned.

The minimum actions required of the DMS switch to provide IDDD are as follows:

- The ability to recognize the IDDD prefix (as described in the following figure) and if 010 was dialed, route the call to TOPS.
- If the IDDD prefix of 01 or 011 was dialed, the DMS switch should be able to receive the additional 7 to 12 digits and determine when end of dialing has occurred. Normal interdigital timing applies until the access code plus the digits have been dialed.
- Invalid actions are partial dial and invalid country codes. Partial dial should be given an announcement and invalid country codes should be given reorder or an announcement.
- Partial dial treatment should be provided if at least 7 digits (following the access codes) have not been dialed and normal interdigital timing expires.
- Critical timing should be applied after the access code (01 or 011) plus 7 digits until 12 digits have been received. Timeout after 7 to 11 digits have been received results in the call being handled by TOPS or handed off to a carrier for operator assistance (if required) and completion.
- Provision should be made for a variable number of national number digits (following the country code in an IDDD call) so that the total number of international destination code digits is 7 to 12 digits long.

TOPS Call Processing Features (Global and Mobile) (continued)

Recognition and Interpretation of IDDD Prefix 01

IDDD PREFIX DIGITS		
01*	011	010
Special Billing or Handling Call (Note 1)	Sent–paid Station–to– (Note 1)	Operator Handled Call Handled Call (Note 2)

Notes:

1 Additional digits should be expected (7 to 12).
2. Dialing should be considered complete when this access code (the 01 prefix followed by a 0) is received.

* 2–digit prefix is followed by first digit of country code (digits 2 through 9).

Recognition of End of Dialing

Determination of a dialing completed condition should be provided by timing. Additionally, the ability for this to be supplemented by switching system options for both translation of IDDD country codes and end of dialing signal recognition should also be provided.

Normal interdigital timing should apply, while receiving international destination code digits, until the seventh digit is received. Standard permanent signal and partial dial conditions should apply up to this point. Interdigital timing should be applied after the seventh through eleventh digits. Dialing should be considered complete after timeout of the interdigital timer or if the twelfth digit is received. The end of dialing indication (#) should also be effective through the eleventh digit.

Because of the variety of lengths of valid national numbers, the IDDD country code translator (Table CCTR), should be capable of providing different translations of the dialed country codes.

DMS switches providing IDDD service under the TOPS Equal Access system arrangement should, when handling calls involving international destination codes, select a route directly to an appropriate INC. The routes can be either separate coin and noncoin trunk groups or combined coin and noncoin trunk groups and may carry a mixture of domestic and international traffic or can be dedicated to international traffic only. Translation of the dialed country code digits is desirable, since this removes many improperly dialed calls at the source.

TOPS Call Processing Features (Global and Mobile) (continued)

AL0610 - Expanded FXDNMAP

The Expanded FXDNMAP feature provides for actual billing number substitution for FX-type calls from all restricted stations, including restricted coin stations. Table FXDNMAP has to be datafilled to map the FX numbers to the actual restricted numbers. Restricted calls can arrive at TOPS on regular TOPS combined trunks with ANI ID 7, or on restricted billing class or class of service lookup trunks with ANI ID 0. Therefore, the FXDNMAP is screened for all restricted calls arriving on trunks with either ANI ID digit 0 or 7. This is in addition to hotel call screening.

FX-type restricted calls that arrive on trunks with ANI ID 0 or 7, screen through Table SPLDNID (for determination of the class of service type for billing) prior to looking up the actual DN in Table FXDNMAP. Therefore, for restricted calls, the FX numbers must be datafilled in Table SPLDNID. The actual numbers must also be datafilled in Table SPLDNID, since the actual number is entered by the operator during ANI failure.

Similarly, the NPA + NXX of both the EOs have to be datafilled in Table TOPSBC for correct verification during both ANI success and ANI failure. Example datafill for Tables TOPSBC, SPLDNID, RESTBIL, and FXDNMAP are shown in the datafill examples.

TOPS Call Processing Features (Global and Mobile) (continued)

Call Progression from a Hotel or Restricted Line

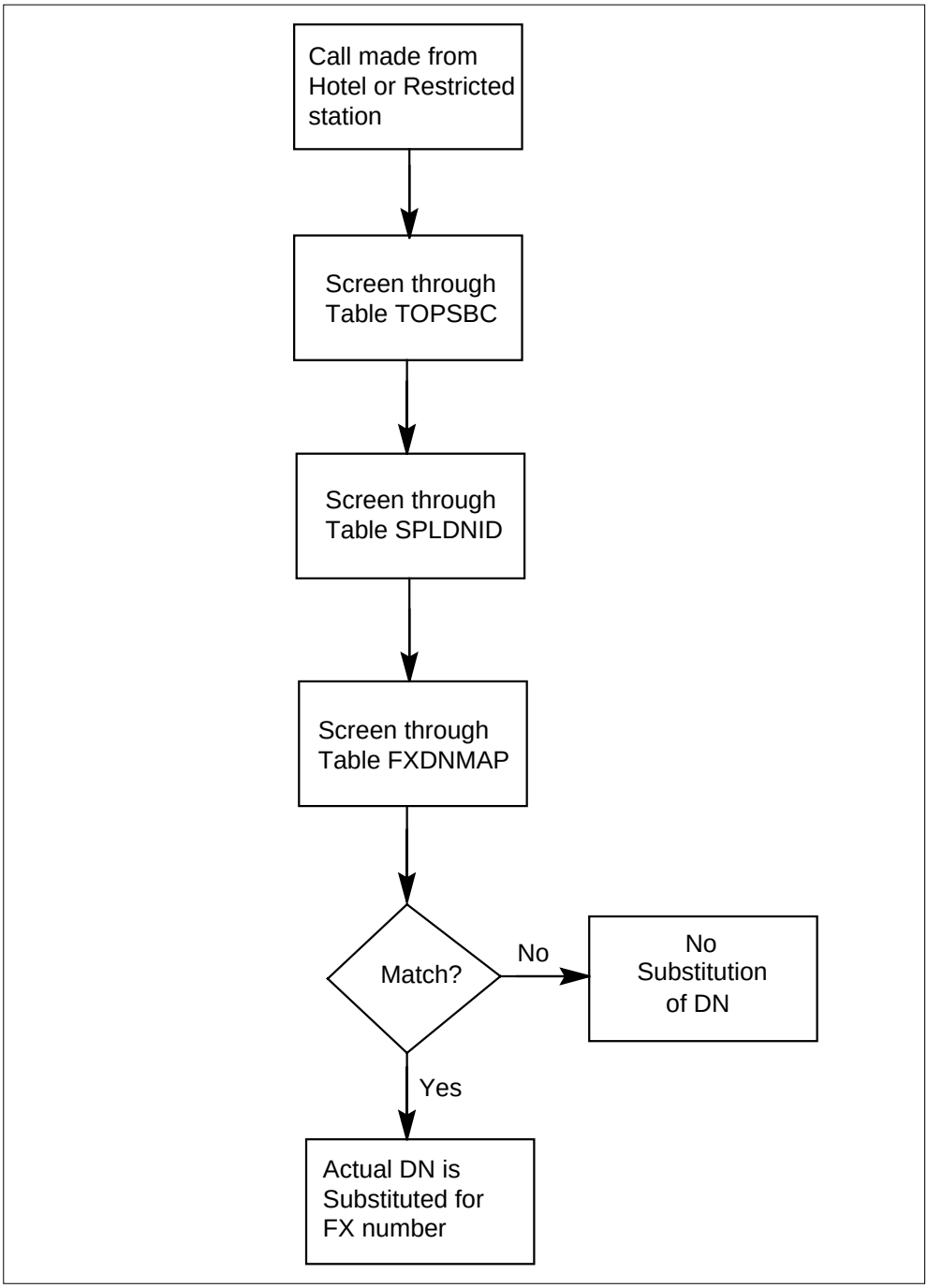

Translations table flow

The TOPS Call Processing Features (Global and Mobile) translation process is shown in the following flowchart.

TOPS Call Processing Features (Global and Mobile) (continued)

Table flow for TOPS Call Processing Features (Global and Mobile)

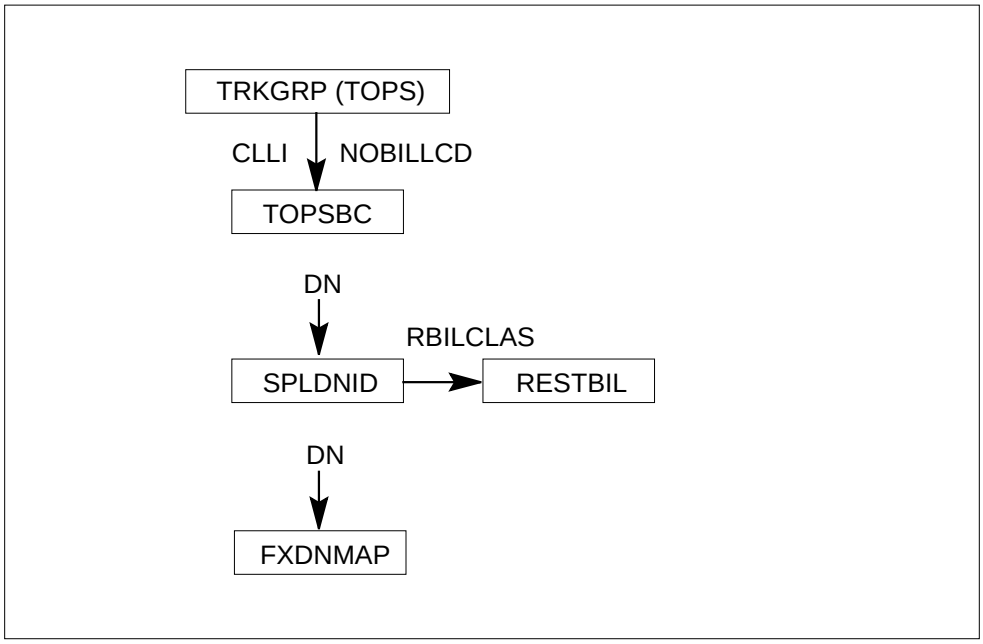

Limitations and restrictions

The following limitations and restrictions apply to TOPS Call Processing Features (Global and Mobile):

BV0232, BV0554, BC0320 - International Direct Distance Dialing (IDDD)

- The country code and the national number, combined, should be limited to a minimum of 7 and a maximum of 12 digits.
- The maximum number of dialed digits following the prefix is 12.
- If the call is not answered in four minutes after the outpulsing of digits is complete, the call is disconnected. This timing and disconnect is performed by TOPS.

Interactions

The following paragraphs describe the interactions between TOPS Call Processing Features (Global and Mobile) and other functionalities.

BV0232, BV0554, BC0320 - International Direct Distance Dialing (IDDD)

Call forwarding to an international number should not be allowed.

The speed calling feature can be used with the IDDD feature but is limited by the maximum number of digits permitted in the speed call table.

TOPS Call Processing Features (Global and Mobile) (continued)

Activation/deactivation by the end user

TOPS Call Processing Features (Global and Mobile) requires no activation or deactivation by the end user.

Billing

TOPS Call Processing Features (Global and Mobile) does not affect billing.

Station Message Detail Recording

TOPS Call Processing Features (Global and Mobile) does not affect Station Message Detail Recording.

Datafilling office parameters

TOPS Call Processing Features (Global and Mobile) does not affect office parameters.

Datafill sequence

The following table lists the tables that require datafill to implement TOPS Call Processing Features (Global and Mobile). The tables are listed in the order in which they are to be datafilled.

Datafill tables required for TOPS Call Processing Features (Global and Mobile)

Table	Purpose of table
TOPSBC	TOPS Billing Code. Lists information for each NNX central office code, special billing code and WATS originating code allowed to originate TOPS calls over a specified trunk group CLLI of type TOPS.
SPLDNID	TOPS Special Directory Number ID. Specifies the Restricted Billing Class (RBC) to be recorded on AMA for Toll and Assist (TA) and Directory Assistance (DA) calls.
RESTBIL	TOPS Restricted Billing. Specifies the Restricted Billing Class (RBC) to be recorded on AMA for Toll and Assist (TA) and Directory Assistance (DA) calls.
FXDNMAP	Foreign Exchange Directory Number Map. Maps the FX line numbers received to the actual directory numbers that are then used for billing purposes.

Datafilling table TOPSBC

The TOPS billing code table TOPSBC lists the following information for each NNX central office code, special billing code and WATS originating code that

is allowed to originate TOPS calls over a specified trunk group CLLI of type TOPS.

Datafilling table TOPSBC

Field	Entry	Explanation and action
BILLCODE	0 to 9 (3 digits)	Billing Code.
LCANAME	alphanumeric (4 characters)	Local Calling Area screening table Name. If local calling area screening is required, enter the name of the local calling area screening subtable which is assigned to the code
SCRNCL	alphanumeric (4 characters)	Class of service screening table name. If class of service screening is required, enter the name of the class of service screening subtable which is assigned to the code
ACTUALBC	0 to 9 (6 digits)	Actual billing code. Enter the actual billing code which is to be entered on the AMA tape.
CHGCLSS	alphanumeric (4 characters)	Charge class. For Northern Telecom AMA format, enter a charge class that is datafilled in table TOPSENTC, field CHGCLSS. For Bellcore AMA format, enter TOPS (Traffic Operator Position System).

Datafill example for table TOPSBC

The following example shows sample datafill for table TOPSBC.

MAP display example for table TOPSBC

```
CLLI            BILLCODE  LCANAME  SCRNCL  ACTUALBC  CHGCLS
_____________________________________________________________
TOPCOMAMF        332      NLCA     NSCR     612332    TOPS
TOPCOMBMF        632      NLCA     NCSR     818632    TOPS
```

Datafilling table SPLDNID

The Special Directory Number ID Table lists the directory number of subscribers that require special billing.

Datafill example for table SPLDNID

The following example shows sample datafill for table SPLDNID.

TOPS Call Processing Features (Global and Mobile) (continued)

MAP display example for table SPLDNID

```
SPLDN                    SPLSEL
_____________________________________________________________
                         SEL                      RBILCLAS
                         --------                 --------
6123328364               RSTRCTD                  0
8186327734               RSTRCTD                  0


SPLDN       SPLSEL
-----       ------------------------------------------------
            SEL  LC_TYPE ACTS_COMPATIBLE  RESCOIN RBILCLAS
            --- -------  ---------------  ------- --------
6123328364  COIN STD     NOACTS             Y       0
8186327734  COIN STD     NOACTS             Y       0
```

Note: For traffic from restricted coin lines, only the datafill of Table SPLDNID is different.

Datafilling table RESTBIL

Table RESTBIL defines billing classes (up to 100) and associates each defined class to a screen display (Operating Company's choice for the name) and one or more (up to six) valid billing types.

Datafill example for table RESTBIL

The following example shows sample datafill for table RESTBIL.

MAP display example for table RESTBIL

```
BILCLASS      SCRNDISP   BILTYPES
_____________________________________________________________
 0            INMATE        COL $
```

Datafilling table FXDNMAP

Table FXDNMAP provides substitute telephone numbers for hotel originated or restricted station calls served by offices that cannot provide ANI ID digit 6 or 7 in the ANI spill.

Datafill example for table FXDNMAP

The following example shows sample datafill for table FXDNMAP.

TOPS Call Processing Features (Global and Mobile) (end)

MAP display example for table FXDNMAP

```
FXNUM              ACTLNUM
_____________________________________________________________
8186327734         6123328364
```

Translation verification tools

TOPS Call Processing Features (Global and Mobile) does not use translation verification tools.

SERVORD

TOPS Call Processing Features (Global and Mobile) does not use SERVORD.

TOPS Call Processing Features (Rating)

Ordering codes

Functional group ordering code: OSB00101

Functionality ordering code: not applicable

Release applicability

TOPS15 and up

Prerequisites

To operate, TOPS Call Processing Features (Rating) requires the following:

- Functionality BAS Generic, BAS00003
- Table TOPSFTR paramter TOPS_ON_OFF_SWITCH = Y

Description

The TOPS rating system is a service that allows the Operating Company to rate calls and calculate charges (including tax) based on a predefined set of characteristics. With the rating system, the Operating Company is able to provide its subscribers with a reliable and consistent method for rating TOPS calls for which charges are required immediately (e.g., coin-paid calls).

This functionality is provided by the following features:

Feature number	Feature name
BV0179	Overseas Rating
F0984/F0992	Rate Step Calculation Methods
BC0336	Mass DMO Test Program
BV0178	Rating Mass DMO
BR0336	Minimum Charge
BR0373	Rate Period Specific Billing
BR0422	Independent Coin Recall Interval
BR0700	Pseudo Hotel NXX Tables
BR0737	Fractional Tax
BK04339	Tenths of seconds timer for rated calls (BCS36)

TOPS Call Processing Features (Rating) (continued)

BV0179 - Overseas Rating

The Overseas Rating feature is used to handle international calls that require operator assistance for completion.

F0984/F0992 - Rate Step Calculation Methods

The TOPS rating system is made up of 48 tables that contain the data required to calculate the rate step and the charge for coin, hotel, and non-coin calls. Automatic Message Accounting (AMA) records are generated for all chargeable or billable calls originating from these stations.

TOPS allows the operator to quote the charges for initial and overtime periods to subscribers calling from coin stations and to subscribers requesting the T&C service. Only those calls for which a charge is quoted, such as T&C calls, are rated on a real-time basis by the rating system.

BC0336 - Mass DMO Test Program

The Mass DMO Test Program allows an Operating Company to make extensive changes to the TOPS rating table datafill without interrupting service to subscribers. This program is normally used in conjunction with the rating test program. Refer to BV0178 - Rating Mass DMO for more information.

BV0178 - Rating Mass DMO

The Rating Mass Data Modification Order (DMO) program allows an Operating Company to verify the datafill for the TOPS rating tables. This program is normally used in conjunction with the mass table control program. Refer to BC0336 - Mass DMO Test Program for more information.

The rating test program is completely independent of TOPS call processing; however, data from the the actual rating system tables is used by this program. Thus, the Operating Company should ensure that correct entries and values are in the rating tables before the rating program is used.

BR0336 - Minimum Charge

The Minimum Charge feature allows an Operating Company to implement a minimum charge for all calls rated by the TOPS rating system.

BR0373 - Rate Period Specific Billing

The Rate Period Specific Billing feature allows the charge for all TOPS-rated calls to be calculated based on the rate (discount) in effect at the beginning of each overtime period.

TOPS Call Processing Features (Rating) (continued)

BR0422 - Independent Coin Recall Interval

The Independent Coin Recall Interval feature allows the Operating Company to change the initial recall period for coin calls. This period is independent of the initial period, which is used only for rating purposes.

BR0700 - Pseudo Hotel NXX Tables

The Pseudo Hotel NXX Tables feature provides a mapping arrangement that associates hotel-originated TOPS calls with pseudo numbers, then matches these pseudo numbers with actual hotel numbers.

BR0737 - Fractional Tax

The Fractional Tax feature allows the tax for a call to be calculated to a tenth of a percent.

BK04339 - Tenths of seconds timer for rated calls (BCS36)

Tenths of seconds time accuracy is now used on rated calls: coin, hotel, and time and charges.

Operation

BV0179 - Overseas Rating

The Overseas Rating feature is used to handle international calls that require operator assistance for completion.

BV0179 is implemented using the Overseas Rating Tables:

- Overseas Rate Step (OVSRS)
- Overseas Number to Country Name Mapping (COUNTRY)
- Overseas Credit Card (OVSCC)
- Overseas Billing Restrictions (OVSBILL)
- and Country Code (CCTR).

The tandem examines these tables when the incoming digits for a call are identified as international.

F0984/F0992 - Rate Step Calculation Methods

The TOPS rating system is made up of 48 tables that contain the data required to calculate the rate step and the charge for coin, hotel, and non-coin calls. Automatic Message Accounting (AMA) records are generated for all chargeable or billable calls originating from these stations.

TOPS allows the operator to quote the charges for initial and overtime periods to subscribers calling from coin stations and to subscribers requesting the T&C

service. Only those calls for which a charge is quoted, such as T&C calls, are rated on a real-time basis by the rating system.

The three rating methods are Automatic, Semiautomatic, and Manual. These methods are used to determine the rate step, which is a combination of a tariff and a distance that can be used to calculate the charges for a call. All rating functions are performed by the TOPS rating system based on the call details used to process a call.

Automatic Rating Method

The Automatic rating method allows an Operating Company to automatically define the rate steps for calls using one of the following three rate step calculation methods: Vertical and Horizontal (V-H), Point-to-Point (PTP), and Single Rate Area (SRA).

For Automatic rating, charges are automatically calculated for a call according to the rate schedule in effect at the time the call was originated.

- V-H Rate Step Calculation Method

  The V-H method (F0984) allows an Operating Company to rate calls based on the vertical and horizontal coordinates of the calling and the called NPA.

  The TOPS rating system provides automatic rating for up to 16 originating NPA and up to 63 originating tariffs. A tariff is a set of rate schedules that is applicable to chargeable calls and that includes tax and rounding information. A rate schedule is a common set of rating characteristics that apply from an originating point to a terminating point.

  The V-H system consists of a theoretical grid of vertical and horizontal lines covering Canada, the United States, and part of Mexico. Each rate center (NXX) is assigned a V and an H coordinate. Rate steps are determined by performing a series of calculations using the V-H coordinates of any two rate centers.

  The City Zone rate step calculation method is an extension of the V-H rate step calculation method. City Zone rating allows an Operating Company to rate TOPS calls using two V-H coordinates: one for calls that exceed the Operating-Company-specified rate distance and another for calls that are less than the Operating-Company-specified rate distance (airline distance between rate centers). The V and H calculations are automatically performed based on the actual coordinates for the calling and called parties.

  This method uses tables VH and MILES.

- PTP Rate Step Calculation Method

TOPS Call Processing Features (Rating) (continued)

The PTP method (F0992) allows an Operating Company to define the rate step used from a point in its serving area to a terminating point. All NPA-Exchanges (NPA-NXX) that share the same rate step can be grouped in the same Originating Rate Center (ORC). Similarly, all NPA-NXX in the terminating area that share the same rate step can be grouped in the Terminating Rate Center (TRC).

The PTP rate step calculation method can be defined only for a limited number of locations because of data store limitations. For this reason, it should be used only to domestic points where SRA and V-H rating is not possible.

This method uses tables ORIGC, TERMRC, PTP, and CLDNPA. Also, the following OFCENG parameters are used:

— TOPS_MAX_ORIG_RATE_CENTER - Specifies the maximum number of originating rate centers required for the PTP rate step calculation method.

— TOPS_MAX_TERM_RATE_CENTER - Specifies the maximum number of terminating rate centers required for the PTP rate step calculation method.

- SRA Rate Step Calculation Method

  The SRA method allows an Operating Company to specify that one rate step per tariff be used on all calls terminating to an NPA. The SRA method is the fastest of the three rate step calculation methods because no calculation is required. This method is also the most economical because the V-H coordinates for all the terminating NPA-NXX combinations do not have to be datafilled.

Semiautomatic Rating Method

The Semiautomatic rating method is used when a rate is not available because a rate step has not been programmed into the TOPS rating system or there is trouble with the rating system itself.

In this case, the operator manually enters the rate step; then the rating system automatically calculates the charge for the call according to the rate schedule in effect at the time the call was originated.

Manual Rating Method

The Manual rating method is used if the following conditions exist, in which case the operator must perform the complete rating function for the call:

- charge tables are not in the Automatic Rating System (ARS) for a call (either to conserve data store or because the ARS cannot determine the charge for a call because of other factors)
- a call cannot be automatically timed by the TOPS rating system.

BC0336 - Mass DMO Test Program

The Mass DMO Test Program allows an Operating Company to make extensive changes to the TOPS rating table datafill without interrupting service to subscribers. This program is normally used in conjunction with the rating test program. Refer to BV0178 - Rating Mass DMO for more information.

The Mass DMO Test Program copies the contents (active data) of the rating tables into companion tables called twins, providing the Operating Company with two sets of rating data. The data (inactive) in the twin tables can then be modified as necessary then tested using the rating test program. When the changes are verified, the inactive data is swapped with the active data and the twin tables are cleared.

Following is a list of all the TOPS rating tables that have companion tables. All companion tables are denoted by the letter I.

- CHARGE, CHARGEI
- CHGMAP, CHGMAPI
- CLDNPA, CLDNPAI
- CLDNPAEX, CLDNPAEXI
- DCOUNT, DCOUNTI
- HOLTRT, HOLTRI
- LCLRS, LCLRSI
- MILES, MILESI
- MINCHG, MINCHGI
- ORIGRC, ORIGRCI
- OVSRS, OVOVRSI
- PTP, PTPI
- RBKMAP, RBKMAPI
- RBKSET, RBKSETI

TOPS Call Processing Features (Rating) (continued)

- ROUND, ROUNDI
- SCHED, SCHEDI
- SRVRS, SRVRSI
- SUR, SURI
- TAXES, TAXESI
- TAXMAP, TAXMAPI
- TERMRC, TERMRCI

The Mass DMO Test Program, which is also referred to as mass table control (MASSTC), is accessed at the CI level of a MAP by entering the command “masstc." The following figure shows the screen that appears on the MAP after the masstc and help commands are entered. For a detailed description of these commands, refer to table CHARGEI in the data schema section of this document.

BV0178 - Rating Mass DMO

The Rating Mass Data Modification Order (DMO) program allows an Operating Company to verify the datafill for the TOPS rating tables. This program is normally used in conjunction with the mass table control program. Refer to BC0336 - Mass DMO Test Program for more information.

The rating test program is completely independent of TOPS call processing; however, data from the the actual rating system tables is used by this program. Thus, the Operating Company should ensure that correct entries and values are in the rating tables before the rating program is used.

After the Mass DMO Test program has been used to modify the data in the TOPS rating tables, the rating test program can be used to verify the changes that were made.

Using the rating test program, the Operating Company can enter the details of the call to be tested, specify the table data (active or inactive) that should be used, then enter the rate step or charge calculation for the call.

> ***Note:*** Refer to BC0336 - Mass DMO Test Program for a description o of the difference between active and inactive table data.

The rating test program is accessed at the Command Interpreter (CI) level of a Maintenance and Administration Position (MAP) by entering the command “rate." The following figure shows the screen that appears on the MAP after the rate and help commands are entered.

TOPS Call Processing Features (Rating) (continued)

Rating Test Program Help Screen

```
>rate
FOR DOCUMENTATION, ENTER    HELP
RATE:
>help

TOPS RATING TEST PROGRAM.
CALCULATES RATE STEPS AND/OR CHARGES FOR IMAGINARY CALLS.

THE FOLLOWING SUBCOMMANDS BOTH QUERY AND UPDATE
THE VALUE OF TEST PROGRAM VARIABLES:
CLG DOL CLD BIL SPL OSC TSC CAT TAC DRT
DUR SOC RS USE
TO QUERY, ENTER THE SUBCOMMAND WITHOUT PARAMETERS
(E.G. CLG 2134567890)
VALUES ARE REMEMBERED UNTIL THEY ARE EXPLICITLY
OVERWRITTEN.

OTHER SUBCOMMANDS ARE:
QUIT HELP SHOW CR CALC_CHG CB
>quit
```

Following is a brief description of the rating test program commands. For a detailed description of these commands, refer to Table SCHNUM in the data schema section of this document.

TOPS Call Processing Features (Rating) (continued)

Rating Test Program Commands

HELP	Help
Q	Query
QUIT	Quit
SHOW	Show Current Settings
CLG	Calling Number
DOL	TOPS Call Type
CLD	Called Number
BIL	Billing Type
SPL	Special Number Type
OSC	Originating Station Class
TSC	Terminating Station Class
CAT	Call Type
TAC	Time and Charge
DRT	Dial Rate Key
SOC	Start of Call Time
DUR	Call Duration
RS	Rate Step
USE	Table Usage
CB	Calculate Both

BR0336 - Minimum Charge

The Minimum Charge feature allows the Operating Company to set a minimum charge for all rateable calls. For example, if the computed charge for a call is less than the minimum charge, the minimum charge is applied to that call. The comparison of the computed charge with the minimum charge is done before the taxes and the surcharge are applied to the call and also before nickel rounding is performed.

The Minimum Charge feature is implemented through the Minimum Charge (MINCHG) Table.

BR0373 - Rate Period Specific Billing

The Rate Period Specific Billing feature allows the charge for all TOPS-rated calls to be calculated based on the rate (discount) in effect at the beginning of each overtime period.

With the Rate Period Specific Billing feature, a call that starts in one rate period and continues into another uses the discount applicable in the first rate period on the first part of the call and the discount applicable in the second rate period on the second part of the call.

Consider the following example. For this example, assume that the call is a 10-minute, hotel-paid call and that the calling and called parties were connected at 22:56:59 (10 hours, 56 minutes, and 59 seconds).

CHARGES
$2.00 for the first three minutes
$0.70 for an additional minute

DISCOUNTS
18:00 to 23:00 = 1/3 off
23:00 to 24:00 = 2/3 off

STANDARD ALGORITHM
$2.00 (first 3 minutes, no discount)
$3.27 (7 additional minutes,
1/3 off: 7 x 0.70 x 2/3 = 3.267)
———
$5.27 Total Charge

RATE PERIOD SPECIFIC BILLING
$2.00 (first 3 minutes, no discount)
$0.47 (first additional minute,
1/3 off: 0.70 x 2/3 = 0.467)
$1.40 (6 additional minutes,
2/3 off: 6 x 0.70 x 1/3 = 1.40)
———
$3.87 Total Charge

The DCOUNT, CHARGE, and CHGMAP tables are used to implement this feature.

BR0422 - Independent Coin Recall Interval

The Independent Coin Recall Interval feature allows the Operating Company to change the initial recall period for coin calls. This period is independent of the initial period, which is used only for rating purposes. This period can be specified for each schedule defined in the Rate Schedule (SCHED) Table.

In table SCHED, the CIRP field is used to define the duration of the coin initial recall period. The value in this field should be equal to or greater than the value in the INP field of table CHARGE. If the value in the CIRP field is 0, a subscriber placing a call from a coin station will not be returned to the operator until the end of the call and only if a charge is owed.

TOPS Call Processing Features (Rating) (continued)

BR0700 - Pseudo Hotel NXX Tables

The Pseudo Hotel NXX Tables feature provides a mapping arrangement that associates hotel-originated TOPS calls with pseudo numbers, then matches these pseudo numbers with actual hotel numbers.

The Pseudo Hotel NXX Tables feature creates the Foreign Exchange Directory Number Map (FXDNMAP) Table that matches pseudo numbers for hotel calls with actual hotel numbers.

This feature helps TOPS identify hotel calls from end offices that cannot generate the necessary signaling information (ANI ID digit 6 or 7) that would indicate that the calls were from a hotel station. To solve this problem, hotel calls from these types of offices are routed to other end offices that can generate the necessary signaling information; then the calls are routed to TOPS.

This feature is implemented for all types of signaling that DMS-200/TOPS accepts, such as Traditional Signaling, Operator Services Signaling, and Feature Group D (FGD) Signaling.

BR0737 - Fractional Tax

The Fractional Tax feature allows the tax for a call to be calculated to a tenth of a percent.

When calculating the charge for a call, the TOPS rating system uses the following information: the tax rate, the rounding factor, and the amount to be taxed.

BR0737 allows tax rates to be expressed as real numbers. This capability is implemented through the TAXES Table, the Rate fields of which now contain a place holder that allows an entry of, say, 68 to be interpreted as 6.8 percent.

Previously, the tax rate could be expressed only as an integer, meaning a fractional portion of the tax rate could not be used. In this case, an entry of 68 would be have been interpreted as 68 percent.

BK04339 - Tenths of seconds timer for rated calls (BCS36)

Tenths of seconds time accuracy is now used on rated calls: coin, hotel, and time and charges.

TOPS rating calculates charges for coin, hotel, and time and charge calls based upon the duration of the call. Call duration is the amount of time the calling and called parties talk and previously was accurate to seconds. TOPS rating used seconds time accuracy in calculating charges.

Call duration also appears on the AMA record as the elapsed time. The elapsed time is accurate to tenths of seconds.

The seconds accuracy of TOPS rating and the tenths of seconds accuracy of the elapsed time presents an inconsistency in calculating charges. The elapsed time shows when a call has crossed into the next time period but the amount of charge in the AMA record indicates that the call did not cross into another time period. The intent of this PRSDOC is to conform TOPS rating to a tenths of seconds time accuracy.

Prior to this PRSDOC, a call that ended at one tenth of a second into a minute period was not charged for that period. Now, at one tenth of a second into a minute period, the call is charged for that minute period as shown in the following figure.

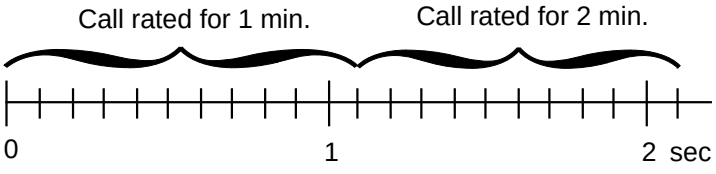

New call duration measured with 1/10 sec. accuracy

For coin calls, table ACTSOPTS determines initial and recall periods. For hotel calls and time and charge calls, table CHARGE determines initial and overtime periods.

For more information on coin calls, refer to Automatic Coin Toll Service, ENSV0102. Information on hotel calls is given in package TOPS Call Processing Features (Calls Connected to a TOPS Position), OSB00101. Information on time and charges calls is given in this module, TOPS Call Procesing Features (Rating)..

What is the TOPS rating system

The TOPS rating system is a service that allows the Operating Company to rate calls and calculate charges (including tax) based on a predefined set of characteristics. With the rating system, the Operating Company is able to provide its subscribers with a reliable and consistent method for rating TOPS calls for which charges are required immediately (e.g., coin-paid calls).

The TOPS rating system is arranged to allow the Operating Company to create rate schedules that consist of a common set of rating characteristics. These

TOPS Call Processing Features (Rating) (continued)

characteristics apply from an originating point to a terminating point. The same rate schedules can be used for different combinations of originating and terminating points that share the same rating characteristics.

An originating point may have several rate schedules depending on the type of rating required (e.g., local, domestic, North American, or overseas). The group of rate schedules that entirely defines the rating requirements of an originating point is called a tariff. A tariff is based on the calling party's NPA-NXX.

An example of a TOPS serving area appears in the following figure. Note that more than one NPA can share the same tariff; note also that one NPA may be rated by more than one tariff. The Operating Company may define a maximum of 16 NPAs for a serving switch. The maximum number of tariffs for a serving switch is 63.

Example of a TOPS serving area

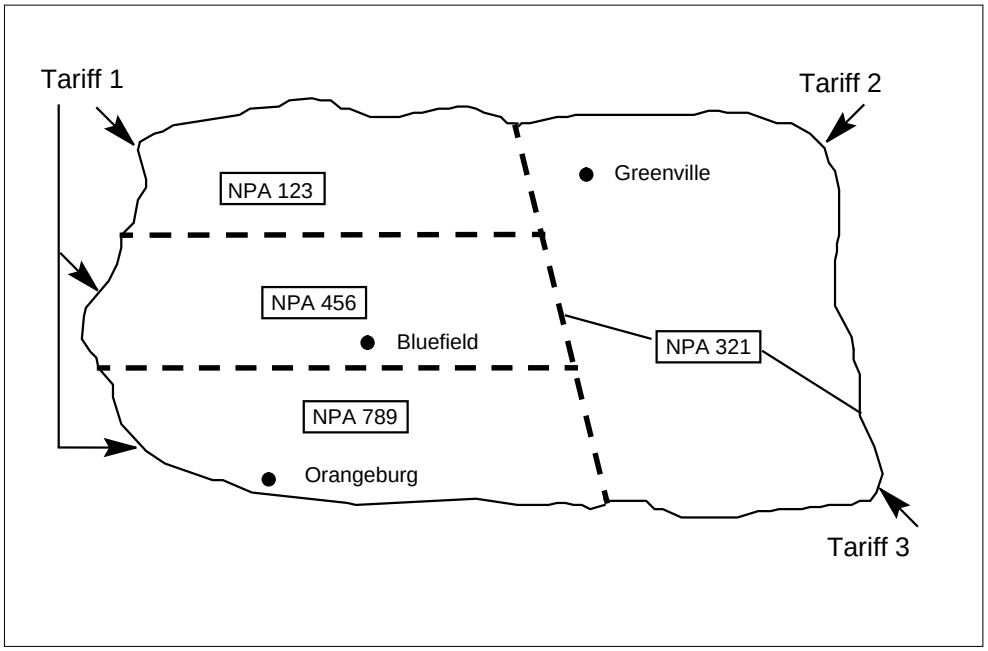

The application software for the TOPS rating system is comprised of 48 tables containing data defined by the Operating Company. The data is required to determine the rate schedule and the rate step for all rateable TOPS calls. The rate step is a value used in a standard algorithm for calculating the final charges for all rateable calls.

While the rate schedule and the rate step drive the charge calculation for all rateable calls, billing details also have an affect on the final charges. The call

charges may vary depending on whether the call was person or station billed; operator handled, operator assisted, or direct dialed; and coin or non-coin. Different charges may be assigned to various combinations of these factors as required. The rate schedule provides the necessary refinement of the charges based on the billing details.

On-line rating

The TOPS On-Line rating system is composed of 48 data tables that contain the data required to calculate, on a real time basis, the rate step and charges for TOPS calls. Not all calls require On-Line rating. Only those calls for which rates are required for quotation to the subscriber are rated by this system. These are the following call types:

- All calls requesting Time and Charges
- Paid calls originating from a coin phone
- Paid calls originating from a hotel

Obtaining a rate step and schedule

There are several different methods for obtaining a rate step and schedule. Vertical-Horizontal (VH), City Zone (CZ), Point To Point (PTP) and Single Rate Area (SRA) are used for domestic calls. Overseas Rate Step (OVSRS) is used for overseas calls, Service Rate Step (SRVRS) for service calls and Local Rate Step (LCLRS) for local calls. The method used is determined by either the Called NPA (CLDNPA) table or the Called NPA Extension (CLDNPAEX) table, both of which are based upon the called number and the tariff obtained from the Calling Tariff (CLGTRF) table indexed by the calling number.

SRA: SRA is the simplest method. This method specifies one rate step per tariff on all calls terminating to an NPA. It is the fastest because no calculations are needed.

VH: The VH method assigns an imaginary grid to an area. Rate centers are represented by the vertical and horizontal coordinates of the grid. The distance between two rate centers is calculated via the coordinates. The distance is then used to obtain a rate step.

CZ: The CZ method is similar to the VH method. The CZ method applies only to large cities with more than one rate center. The VH method is used to calculate the distance. If that distance exceeds the distance in the City Zone (CITYZONE) table for that city, then a new set of VH coordinates are used. The distance is recalculated and the rate step is obtained. If the original distance is less than the distance iN table CITYZONE for that city, then the distance is not recalculated.

TOPS Call Processing Features (Rating) (continued)

PTP: PTP rating groups originating NPANXXs into originating rate centers (ORCs). The same rate center can be used for several NPANXX's. The same is done for the terminating NPANXX (terminating rate center [TRC]). The hybrid of the ORC and the TRC yields a rate step.

- OVSRS provides one rate step per country.
- LCLRS provides a single rate step for local calls.

SRVRS: SRVRS is indexed by a service name based on the called number or from table DABILL. This service name and tariff is used to obtain a rate step.

Calculate the charges

The following paragraphs explain the six-step process used to calculate charges.

1. Determine if the day should be treated as a holiday. This involves checking the date of the call against the Holiday (HOLDAY) table. If the day is a holiday, then a name is retrieved from the table. That name along with the schedule is used to determine what holiday treatment is imposed in the Holiday Treatment (HOLTRT) table. If the day is not a holiday, then advance to the next step.
2. Determine from the Rate Break Map (RBKMAP) table the set of rate breaks for the day of the week. The RBKMAP table indicates the index into the Rate Break Set (RBKSET) table. The RBKSET table allows for eight time periods throughout the day that can have a discount associated with it. The time of the call is used to determine if a discount should be applied.
3. Apply the percentage of discount as set by the table RBKSET. The Discount (DCOUNT) table is indexed to determine the discount, if any, for the call.
4. Obtain the charges for the call. This is done on the basis of station or person, schedule and rate step from the Charge (CHARGE) table. Discount the charges if needed.
5. Add any surcharges that apply to the call. The Surcharge (SUR) table is accessed by the schedule. It allows different surcharges for the following categories: station collect calls, station calls that are billed to a third number, station calls requiring Time and Charges, station calls billed to a calling card, person collect calls, person calls billed to a third number, person call requiring Time and Charges and person calls billed to a calling card. The value at this point is the pretax charge.
6. Calculate the taxes. The Tax Map (TAXMAP) table indicates up to three levels of taxation that are applied to the charges (e.g., federal, state and municipal). The Taxes (TAXES) table yields the tax rate applicable to

each level of taxation. The tax is added to the charges and rounded to either the nearest nickel or cent as specified in the Rounding (ROUND) table. The value at this point is the total charge for the call.

Tasks discussed in the following sections

The following is a list of tasks associated with administering the rating system:

- Setting up the rating system
  - — Determining the call types that require TOPS rating
  - — Selecting the rating method to use for each call type
  - — Identifying the tariffs and rate schedules to use
  - — Identifying the methods for determining the rate step
  - — Determining the charge method for calls
  - — Determining when fractional taxes should be calculated
  - — Determining when carrier rating should be applied
  - — Establishing rating for service calls
  - — Datafilling the rating system tables
  - — Verifying datafill using the rating test program
- Monitoring the rating system

For additional sources of information about the rating system, see the following exhibit.

The TOPS Call Processing Features (Rating) translation process is shown in the flowchart that follows.

Other rating information

For more about	See
rating hotel-originated calls	“Administering the Hotel Service System" in TOPS Call Processing Features (Connected Calls).
the data tables that make up the TOPS rating system	Data schema section of this document.

TOPS Call Processing Features (Rating) (continued)

Other rating information

For more about	See
the AMA records generated for rated calls using the Northern Telecom (NT) format	Automatic message accounting section of this document.
the AMA records generated for rated calls using the Bellcore (BCR) format	*Automatic Message Accounting Bellcore Format Reference Guide,* (BCR Format) (297-1001-830).

Determining the call types that require TOPS rating

The automatic message accounting (AMA) system records all billable toll calls originating from coin and non-coin (including hotel) stations. Normally, these toll calls include those switched through TOPS and destined for local, domestic toll, and overseas or domestic telephones.

However, all such calls are not necessarily rated by the DMS/TOPS rating system. Only those calls for which rates are required for quotation to the subscriber are rated on a real-time basis (e.g., time and charges). Approximately 20 to 30 percent of all TOPS calls can be rated.

The rate information provided by the system depends on the following:

- the call type (coin-paid or non-coin-paid)
- the type of billing selected (e.g., collect)
- the charge and tax (if any) for the call
- the number of times the call is rated

TOPS uses this rating information to determine:

- the rate information to display at the Operator Position
- the rate step and rate schedule to select
- the origination time to use (calling or called connect)

Coin-paid calls

The following steps explain how coin-paid calls are handled:

1. The initial period charge for coin-paid calls (including applicable taxes) is calculated. Then, the cost is displayed to the operator who requests the calling subscriber to deposit the calculated amount.
2. Timing stops five seconds before the end of the initial period, at which time the calling subscriber is returned to the Operator Position for notification. No money is collected at this point.
3. If the call is disconnected within five seconds of notification, no further action is required.
4. If the call continues into overtime and the call is terminated before the coin recall period (specified by the Operating Company) elapses, the calling subscriber is returned to the operator at call termination, and the entire call is rated again. The amount previously quoted is subtracted from the new amount, and the difference is displayed to the operator.
5. If the call is terminated after the coin recall period ends, timing stops five seconds before the end of the coin recall period. The calling subscriber is returned to the Operator Position for collection of overtime charges. The entire call up to that point is rated again, and the amount previously quoted is subtracted from the new amount. The difference is displayed to the operator.

The method of terminating a call after the coin recall period implies that there could be differences in the amounts quoted at the end of coin recall periods of the same duration. The following table shows how the charges for a coin-paid call are calculated for the following conditions:

- charge for the first 3 minutes is $1.30
- charge for each additional minute is $0.12
- tax is 7% (rounded to the nearest nickel based on a factor of 2.5, with post-tax nickel rounding based on a factor of 2.5)
- call length is 25 minutes
- coin recall period is 10 minutes

Example charge calculation for coin-paid call

Minute mark	Display	Action
0:00	$1.40 for 3 min.	Operator requests deposit.
2:55	_	Timing stopped. Coins collected.

TOPS Call Processing Features (Rating) (continued)

Example charge calculation for coin-paid call

Minute mark	Display	Action
12:55	$1.30 for 10 min.	Timing stopped. Coins collected. Operator requests deposit.
22:55	$1.25 for 10 min.	Operator requests deposit. Coins collected when call is queued.
24:20	$0.30 for 2 min. (disconnect)	Operator requests deposit. Coins collected when call is queued. The charge for the 25 minute call is $4.25.

Non-coin paid calls

The conversation time and charges for non-coin-paid calls are determined by the system. The call details are printed on a teletypewriter (TTY) in the hotel billing information center (HOBIC), on an Operator Position (if Time and Charges is provided), or on an autoquote (AQ) TTY at the hotel (if AQ service is provided).

The call details that are printed or displayed include the following:

- billable conversation time
- calling number
- called number
- the number of the paying party is identified
- time of day
- charges
- taxes (taxes are never calculated on T&C calls)

Selecting the rating method to use for each call type

The three rating methods (automatic, semiautomatic, and manual) store varying amounts of information about the call in memory. The amount of rating information stored in memory determines the extent to which calls can be automatically rated.

The software is capable of automatically rating almost all rated, operator-handled traffic. Each Operating Company decides which rating method is the most practical and economical for the call types handled by the

TOPS Call Processing Features (Rating) (continued)

TOPS office. Following are additional details about the rating methods to assist you with determining which rating method to use.

Automatic method

All rating functions are performed by the system based on the call details used to process the calls. Automatic rating eliminates the time-consuming rating operation previously performed by the operator on cord and cordless switchboards and contributes significantly to the total gain in operator efficiency inherent in the TOPS design. Automatic rating is recommended for the following reasons:

- improved subscriber service because of the faster handling of coin calls
- increased accuracy in calculating charges
- more accurate and prompt quoting of charge details to hotels and to subscribers requesting T&C
- permanent record of the details on hotel and T&C calls
- reduced revenue loss because of the increased accuracy and promptness in quoting charges
- improved subscriber confidence in total call billing and possible reductions in the incidence of subscriber fraud
- elimination of switching and network costs to connect with a rate and route operator
- reduced TOPS call setup time (the system no longer has to delay the prompt advancement of a call while a charge is being calculated)
- reduced administration costs for position records (containing rating information)

Semiautomatic method

When it is indicated on the Operator Position CRT that operator action is required, the operator enters the appropriate rate step from the position records or from the rate and route operator. The rest of the rating function is performed automatically by the system.

Manual method

Manually rated calls usually make up only a small percentage of rated calls. However, the system does not distinguish between manual and semiautomatic rating. A valid rate step, defined by the Operating Company, must be entered (e.g., 0). The system uses this rate step to calculate charges. In this case, the rate step (RS) 0 must be assigned the value $0.00.

TOPS Call Processing Features (Rating) (continued)

When it is indicated on the Operator Position CRT that operator action is required, the operator performs the complete rating function for the call. A pseudo rate step (e.g., RS 0) that is assigned a value of $0.00 is entered. If the call is coin-paid, it is held on loop and timed at the position. Rates are obtained from position records or from the rate and route operator. Manual rating is necessary when:

- time-other-line charges (i.e., charges on calls to Mexico) are applied
- charge tables are not in the automatic rating system for a call
- a call cannot be timed automatically by TOPS

Identifying the tariffs and rate schedules to use

The charges for a call depend on the rate schedule in effect at the time the call is placed. The rating system enables you to customize the rate schedules for each DMS/TOPS office.

A rate schedule consists of a common set of rating characteristics that apply from the originating point to the terminating point. An originating point can have several rate schedules (e.g., interstate, intrastate, local, and overseas) that make up a set of schedules for a tariff.

A tariff is a set of rate schedules that applies to billable calls and includes tax and rounding information. Different Operating Companies may have different tariffs, and within one Operating Company, there may be different tariffs for different states or provinces served by that Operating Company. Rate schedules can be shared by different tariffs.

Rates can be expressed in discounts or dollars and cents. Three charge tables can be provided when rates are expressed in dollars and cents. A charge table is the subset of rates (from a rate schedule) that applies to a period of a day or to a day of the week.

For example, a rate schedule that has a set of rates for weekdays between 6 am and 6 pm and a separate set of rates for weekdays between 6 pm and 6 am, and for all day Sunday, has two charge tables.

Up to eight discounts may apply when the rates for the subsequent time frame are discounts of the first set of rates. For example, a set of rates applies between 8 am and 6 pm daily. These rates are discounted by a different amount for the following periods:

- 6 pm - 11 pm weekdays: 1/3 off overtime minutes
- 11 pm - 8 am daily: 2/3 off overtime minutes

- 8 am - 6 pm Sunday: 2/3 off overtime minutes
- 6 pm - 11 pm Sunday: 1/2 off overtime minutes

This schedule has one charge table that is discounted by three values (1/3, 1/2, 2/3).

Identifying the methods for determining the rate step

The rate step is a value used in a standard algorithm for calculating the final charges for any rateable call. The method used to determine the rate step depends on whether the called number is domestic, local, or overseas. The following table displays the various methods based on call types.

Rate step method based on call type

Call type	Method for determining the rate step
Domestic	One of the following calculation methods can be used: • Vertical-Horizontal coordinate method, based on mileage bands • City Zone method, based on mileage bands • single rate area (SRA) method, which is not based on mileage bands • point-to-point (PTP) method, which is not based on mileage bands
Local	One local rate step per tariff
Overseas	One overseas rate step per country (more than one if part of the national number is specified in table COUNTRY).

Mileage band schedule

Within continental North America, rate steps are generally based on mileage bands. A mileage band is a specified range of distance in miles from the serving office. Each predefined mileage band is assigned a rate step (000-998).

Non-mileage band schedule

For other points (primarily local, overseas, and domestic overseas), rate steps are assigned a value from 000 to 998. Places that have the same initial and overtime period charges can share the same rate step.

TOPS Call Processing Features (Rating) (continued)

Determining the rate step using V-H coordinates

Each exchange or office code (NXX) is designated as a rate center or serving office. The same message toll rates apply to all telephones served by one exchange. These rates are based on the straight-line distance between rate centers except when other line charges apply.

The straight-line distance between rate centers is called the rate distance. To determine the rate distance, and, hence, the rate step, a V-H coordinate system is used. The V-H system consists of a theoretical grid of vertical and horizontal lines covering Canada, the United States, and part of Mexico.

The intersection of the V-H coordinates designates the center of a square with an area of about one-tenth (0.10) of a square mile. This intersection is called a rate center. Following are examples of rate centers matched to V-H coordinates.

Examples of rate centers and their coordinates

Rate center	Vertical coordinate	Horizontal coordinate
Montreal	4127	1992
New York	4997	1406
Ottawa	4338	2241
San Francisco	8492	8719
Toronto	4981	2488
Washington, D.C.	5622	1583

The rate step is determined by performing a series of calculations using the V-H coordinates of any two rate centers.

Determining the rate distance (V-H)

The standard procedure used by the telephone industry for determining rate distance is described next.

1. Determine the V-H coordinates for each rate center.
2. Determine the difference between the V coordinates and the difference between the H coordinates by subtracting the smaller coordinates from the larger.
3. Divide each of these differences by three, rounding each quotient to the nearest integer. Note that for every division by three, the value of N, shown in the following table, is incremented by one.

4. Square these two integers and add the results together. If the sum of the squares is greater than 1777, divide the integers obtained in step 3 by three and repeat this step until the sum of the squares obtained is less than 1778. Note that for every division by three, the value of N, shown in the following table, is incremented by one.
5. Multiply the final sum of the 2 squares obtained in step 4 by the multiplier specified for this value of N, as shown in the following table. The number of successive divisions by three in steps 3 and 4 determines the value of N.
6. Determine the square root of the product in step 5 and round to the highest integer. The result is the rate distance, except when the distance obtained is less than the minimum rate distance shown in step 5, then the minimum rate distance corresponding to the value of N applies.

   Note: In the DMS/TOPS rating system, steps 5 and 6 are not performed; instead the sum of the squares obtained in step 4 is compared with a converted version of the upper mileage bands of the Operating Company, producing the rate step.

N multiplier versus rate distance

Value of N	Multiplier	Minimum rate distance
1	0.9	-
2	8.1	41
3	72.9	121
4	656.1	361
5	5,904.9	1,081
6	53,144.1	3,241

Determining the rate step using the city zone (CZ) method

The city zone (CZ) rate step calculation method is an enhancement to the V-H rating method. This method applies only to some of the largest cities in the United States that have several rate centers. These rate centers are called city zones.

City zone rating allows an Operating Company to rate TOPS calls using two sets of V-H coordinates: one for calls that exceed the rate distance specified by the Operating Company, and another for calls that are less than this rate distance. The V and H calculations are automatically performed based on the actual coordinates for the calling and called subscribers.

TOPS Call Processing Features (Rating) (continued)

The following tables define the city zones (15 maximum) and match each zone with an NPA-NXX pair:

City zone table

Table name	Description
CITYMAP	The city map table matches a city zone with an NPA-NXX pair.
CITYNUM	The city number table specifies the name of each city, where zone rating applies, and the number associated with each city.
CITYZONE	The city zone table defines the rate distance that is used to determine whether a new set of V and H coordinates is needed for the called subscriber. Together, the CITYMAP and CITYNUM tables, provide an entry that makes a key to index the CITYZONE table.

An Operating Company can allow each city zone to have a different rate distance. If the mileage between the rate centers for the calling and called subscribers is greater than the rate distance defined by the Operating Company in the CITYZONE table, the V and H coordinates of the called number are replaced by the central coordinates of the city. The calculation is redone, and the new mileage is used, with the minimum mileage equaling the rate distance plus one.

In the following example, the calling number is 613-239-6402 and the number dialed is 213-221-5408. The rate method for calls to NPA 213 is CZ (table CLDNPA) and the called city is LOSANG (table CITYMAP). The rate distance assigned to LOSANG in table CITYZONE is 40. The actual mileage between the rate centers for the calling and called numbers is greater than 40 (table VH); therefore, the calculation is redone using the city coordinates in table CITYZONE.

MAP display example for table CLGTRF for CZ method calculations

```
                NPANXX     TARIFF
 ____________________________________
  613           239      BELLONT
  819           525      TELEBEC
```

TOPS Call Processing Features (Rating) (continued)

MAP display example for table CLDNPA for CZ method calculations

	NPATRF		OVERLAY
506	BELLONT	VH	CANUSA
213	BELLONT	CZ	CANUSA
212	BELLONT	CZ	CANUSA

MAP display example for table CITYMAP for CZ method calculations

NPANXX		CITY
213	221	LOSANG
212	263	NEWYORK

MAP display example for table CITYZONE for CZ method calculations

CITYZN	RATEDIST	V	H
NEWYORK	40	4997	1406
LOSANG	40	9213	7878

MAP display example for table VH for CZ method calculations

NPANXX		V	H
213	221	9207	7873
212	263	4988	1378
613	239	4338	2241

Determining the rate step using the single rate area (SRA) method

You can specify that one rate step per tariff be used on all calls terminating to an NPA. This is the fastest method the rating system can use to determine a rate step, since no calculation is required. It is also the most economical method for the Operating Company because V-H coordinates for all the terminating NPA-NXX combinations are not datafilled. This method should be used whenever possible.

TOPS Call Processing Features (Rating) (continued)

MAP display example of SRA datafill for table CLDNPA

```
CLD0NPA      TARIFF       RATE TYPE       RATE INFO

808          Bell           SRA             331
```

Note: RS 331 is always used from points in tariff Bell to NPA 808.

Determining the rate step using the point-to-point (PTP) method

You can specify that any valid rate step be used from a point in its serving area to a terminating point. All NPA-NXXs in the serving area that share the same rate treatment can be grouped in the same originating rate center (ORC). Similarly, all NPA-NXXs in the terminating area that share the same rate treatment can be grouped in the same terminating rate center (TRC). This procedure results in the conservation of data store words. It must be stressed, however, that PTP rating is an expensive method of rate step calculation. This method should be used only to domestic points where SRA or V-H rating is not possible.

MAP display example of PTP datafill for table ORIGRC

```
CLGNPA      CLGNXX      ORC

613         239         1
613         896         1
```

MAP display example of PTP datafill for table TERMRC

```
NPA     NXX     TRC

809     423     1               Barbados*
809     291     2               Bermuda*

                * share NPA 809
```

MAP display example of PTP datafill for table PTP

```
ORC         TRC         RS

1           1           340
1           2           341
```

The extension method

The extension (EXT) method is used with the called NPA extension (CLDNPAEX) table to enhance the capability of the called NPA (CLDNPA) table.

The CLDNPA table only allows one rate schedule for each NPA and tariff. The EXT feature allows each NXX in an NPA to have a different rate schedule.

When the RATETYPE field in the CLDNPA table contains SRA, PTP, CZ, or VH, the standard rate type and schedule apply. But when this field contains EXT, the DMS goes to the CLDNPAEX table to determine the appropriate rate type and schedule.

The CLDNPAEX table matches the NPA and NXX (NPA-NXX pair) of the called number with a rate type, a schedule name, and the tariff of the calling number, as shown in the following table. Note that all NXXs that are not listed for a particular NPA in table CLDNPAEX are rated by the VH method using the schedule name listed in table CLDNPA.

MAP display example for table CLGTRF for the extension method

NPA	NPANXX	TARIFF
212	837	BELLONT
212	821	BELLONT
212	741	TELEBEC
212	234	TELEBEC
613	232	BELLONT
613	866	BELLONT
219	837	BELLONT
613	743	TELEBEC
613	474	TELEBEC
819	745	BELLONT
819	633	TELEBEC

TOPS Call Processing Features (Rating) (continued)

MAP display example for table CLDNPA for the extension method

```
                NPATRF    OVERLAY
 219     TELEBEC  VH    CANUSA
 219     TELEBEC  CZ    CANUSA
 219     BELLONT  VH    TELENORAM
 408     TELEBEC  CZ    USAUSA
 212     BELLONT  EXT   CANUSA
 212     TELEBEC  VH    TELEONT
 613     BELLONT  EXT   TELENORAM
 613     TELEBEC  EXT   CANUSA
 819     BELLONT  EXT   TELENORAM
 819     TELEBEC  EXT   ONTQUE
```

MAP display example for table CLDNPAEX for the extension method

```
                          TRFNPAXX   OVERLAY
 212     837     BELLONT     VH      CANUSA
 212     821     BELLONT     VH      CANUSA
 212     837     TELEBEC     VH      TELEQUE
 212     234     TELEBEC     VH      TELEONT
 613     866     BELLONT     VH      ONTQUE
 613     474     BELLONT     VH      TELEONT
 613     745     BELLONT     CZ      TELEQUE
 819     663     BELLONT     VH      TELEONT
 613     474     TELEBEC     VH      ONTQUE
 819     633     TELEBEC     CZ      TELEONT
```

The one local rate step per tariff method

In this method, the local rate step that applies for each tariff is defined by the Operating Company as shown by the example below.

MAP display example for table LCLRS

```
 TARIFF                  RATE STEP

 BELL                      350
 TELEBEC                   351
```

Note: Table LCLRS allows for two rate steps per tariff name, a standard (STD) and a special (SPL).

One overseas rate step per country method

In this method, the rate step for each country is defined by the Operating Company.

MAP display example for table COUNTRY, with one overseas rate step per country

TARIFF	COUNTRY	RATE STEP
BELL	UK	536
BELL	France	537
TELEBEC	UK	538
TELEBEC	France	537

Note: In table COUNTRY, the country code and a portion of the national number may be listed, which allows more than one name per country to be listed in table OVSRS.

Assessing the methods for determining the rate step

The amount of memory required for the rating system data tables does not need to be precisely calculated before the data is submitted to Northern Telecom for inclusion on the data tape. However, you should have a general understanding of how the data store requirements are impacted by these data tables. The following paragraphs explain the order of assessment of the different rating methods based on the amount of memory required for each method and the efficiency of each method in providing quality service to your customers.

You may decide to trade off the desired level of automatic rating against the cost of providing the memory required to achieve this. On the other hand, the memory and administrative costs may be small relative to the expected increase in operator work time if rating is not highly automated. As a general rule, we recommend using automatic rating for 95 percent or more of the calls handled.

Domestic calls

For domestic points, we recommend that you specify an SRA assignment whenever possible, with the next best choice being VH, and the last choice being PTP. This order of assignment is desirable because of the increasing amount of data store required for each method as explained below.

TOPS Call Processing Features (Rating) (continued)

Single rate area:

For every called NPA-tariff assigned in the CLDNPA table with rate type SRA, a unique tuple is required.

V-H coordinates:

Eight hundred tuples in the VH table are dynamically allocated by the system for every called NPA assigned in table CLDNPA, with a rate type of VH, whether all 800 possible NXX codes are working or not. The space is allocated on the first ADD command in the VH table.

Point-to-point:

Eight hundred tuples in the TERMRC table are dynamically allocated by the system for every called NPA assigned in table CLDNPA, with a rate type of PTP, whether 800 possible NXX codes are working or not. In addition, the number of tuples in the PTP table are dynamically allocated by the system for every called NPA with a rate type of PTP, using the product of the values of office parameter TOPS_MAX_TERM_CENTER specified in the OFCENG table. Also, space is allocated on the first ADD command to the ORIGRC, TERMRC, or PTP table.

Local and overseas calls

Since data store requirements are very small for calculating the rate step to local and overseas points, there are no special considerations that you need to make.

Using traffic studies to determine the rate step calculation method

For most installations, an economic evaluation is not necessary; it suffices to identify the most frequently called NPA, i.e., the NPA that receives over 95 percent (or whatever percentage is chosen) of the rated calls.

Since the significant factor for dimensioning the data tables is the method for determining the rate step for domestically rated points, you may want to

undertake a study of rated calls. The two studies described in the following table can be used.

Traffic studies

Study	Description
Rated Call Volume Study	This study provides a count of originating coin-paid, hotel-paid, and T&C calls by terminating NPA-NXX from all originating rate centers that are expected to be served by TOPS before the next software extension. This study is used in most Operating Companies to provide information used in the preparation of rate tables for toll operators. The minimum study period is one busy-season month. A longer study period, however, ensures that the sample truly represents the full-year call patterns.
Toll Supplementary Peg Count (TSPC) Study	Calls sampled for this study may be used as the data base, or, better still, the TSPC computer program can be modified to produce the information that is needed. As an alternative, a manual study can be undertaken.

Regardless of the method used, the sample count should be converted to an annual call volume in the event that an economic study is necessary. If the annual volume of rated calls to an NPA is known, annual savings in operator work time can be calculated.

Note: A study based on message must be converted to calls.

Determining the charge method for calls

The charges on a call are calculated after the rate step is either automatically determined or manually entered by the operator. When calculating the charge, the following factors are considered:

- class of originating service (coin, non-coin including hotel)
- type of call (0-, 0+, 1+)
- class of call (station, person)
- class of billing (paid, special billing, and so on)
- originating area (tariff)
- originating time zone
- conversation time subject to charge
- rate schedule

TOPS Call Processing Features (Rating) (continued)

- distance (rate step)
- day of week
- time of day
- discounts
- public holidays
- surcharges
- taxes
- length of initial period
- length of overtime interval
- length of coin overtime collection period
- rules for rounding.

One of two billing algorithms are used to calculate the charge. These algorithms are the standard billing algorithm and the rate period specific billing (RPSB) algorithm, which is an enhancement to the discount portion of the standard billing algorithm.

The standard billing algorithm

The charge calculated for a coin-originated call assumes that the deposit on dial-tone first coin stations is automatically returned when the operator is connected.

There is a domestic coin allowance of 30 seconds that is added to the start time of a call and a 120 second coin allowance time for overseas. This could cause the start time to be pushed into the next discount period. When a coin allowance causes a call to be pushed into the next discount, the two discounts are compared. The greater discount is the one that is selected. If the call is a non-coin call, the start time remains true.

There is no allowance made for overpayment on the deposit for the initial period, although the operator can enter the amount of overpayment so that it can be displayed along with the overtime charges.

A special case exists when collect and call back calls are placed to points within the TOPS serving area. TOPS calculates the rate step and selects the rate schedule for that call based on the called number as the originating party, since the called number is also assigned to a tariff in the rating system.

If collect and call back calls are placed to points outside the TOPS serving area, the rate step calculation and rate schedule selection for that call is based

on the calling number as the originating party, since the called number is not assigned to a tariff.

The method described in the previous paragraph results in the correct rates being calculated if rating arrangements are bilateral, e.g., the same rates apply from point A to B as from point B to A.

A special case exists when the DIAL RATE key is used. The call origination message on the Operator Position CRT and the call origination entry on the AMA tape do not change; however, for rating the call, the subscriber may be quoted a different rate if call type tier or multi-tier rating is applied.

The following table identifies the factors that affect rating for different types of station classes and billing methods.

Factors affecting rating

Station Class	Billing	Billed in TOPS serving area?	TOPS rating Notes 1 & 2	AMA billing Notes 1 & 2	Orig. time used	Charge and tax	No. of times call rated
COIN ORIG	Paid	Yes	CLG	CLG	CLG	CHG & TAX combined. Displayed at position.	Note 4
COIN ORIG	SPL CLG T&C	Yes	CLG	CLG	CLG	CHG only	Note5
COIN ORIG	SPL CLD T&C	Yes	CLD	CLG	CLG	CHG only (note 7)	Note5
COIN ORIG	SPL CLD T&C	No	CLG	CLD	CLG	CHG only (note 8)	Note5
HOTEL ORIG	Paid	Yes	CLG	CLG	CLG	CHG & TAX reported separately.	Note 5
HOTEL ORIG	SPL CLG T&C	Yes	CLG	CLG	CLG	CHG only	Note5
HOTEL ORIG	SPL CLD T&C	Yes	CLD	CLD	CLG	CHG only (note 7)	Note5
HOTEL ORIG	SPL CLD T&C	No	CLG	CLD	CLG	CHG only (note 8)	Note5

TOPS Call Processing Features (Rating) (continued)

Factors affecting rating

Station Class	Billing	Billed in TOPS serving area?	TOPS rating Notes 1 & 2	AMA billing Notes 1 & 2	Orig. time used	Charge and tax	No. of times call rated
HOTEL TERM	Collect	Yes	CLD	CLD	CLG	CHG & TAX reported separately (note 7)	Note5
HOTEL TERM	Collect	No	CLG	CLD	CLG	CHG only (note 8)	Note5
HOTEL TERM	1156 1159 1150 T&C	Yes	CLD	CLD	CLD Note6	CHG & TAX reported separately	Note5
HOTEL	PCB	No	CLG	CLD	CLG	CHG only (note 8)	Note5
NON-CN ORIG	Paid T&C	Yes	CLG	CLG	CLG	CHG only	Note5
NON-CN ORIG	SPL CLG T&C	Yes	CLG	CLG	CLG	CHG only	Note 5
NON-CN ORIG	SPL CLD T&C	Yes	CLD	CLD	CLG	CHG only (note 7)	Note 5
NON-CN ORIG	SPL CLD T&C	No	CLG	CLD	CLG	CHG only (note 8)	Note 5
NON-CN TERM	Collect T&C	Yes	CLG	CLD	CLG	CHG only (note 8)	Note 5
NON-CN TERM	Collect T&C	No	CLD	CLD	CLG	CHG only (note 7)	Note 5
NON-CN TERM	1155 1158 1150 T&C	Yes	CLD	CLD	CLD (Note 6)	CHG only	Note 5
NON-CN TERM	PCB T&C	No	CLG	CLD	CLG	CHG only (note 8)	Note5

The following notes apply to the preceding table:

Note 1: CLD - Rate schedule selected on called number.

Note 2: CLG - Rate schedule selected on calling number.

Note 3: SPL - Special billing - (credit card and 3rd number).

Note 4: Number of times a coin-paid call is rated.

A coin-paid call can be rated:

- At the end of the initial period (IP); this always occurs.
- At end of coin recall period (CRP), based on number of minutes in CRP. This could occur several times, depending on the call length and CRP value.
- If call exceeds the IP; this is based on number of overtime minutes.

Note 5: Number of times non-coin and hotel calls are rated (once at the end of the call).

Note 6: On PCB calls, time used is that of party that left word.

Note 7: Unlike the SP-1 switch, where rate schedule is selected on CLG number.

Note 8: Rating mismatches will occur.

Rate period specific billing

Rate period specific billing (RPSB) is an enhancement to the discount portion of the standard billing algorithm. This type of billing can be modified by the Operating Company and can be implemented on a rate schedule basis.

The standard algorithm uses the time-of-day discount applicable at the answer time of the call. The algorithm is used to discount the whole call.

Rate period specific billing ensures that a call, starting in one rate period and completing in another, uses the discount applicable to each rate period.

The following table shows how the charge is calculated using RPSB. The following call details apply:

- Call duration = 10 minutes
- Answer time = 22:56:59

TOPS Call Processing Features (Rating) (continued)

- Charges = $2.00 for first three minutes (no discount) and $0.70 for each additional minute.
- Discounts = 1/3 off from 18:00 - 23:00 and 2/3 off from 23:00 - 24:00

Example rate period specific billing

Calculations	Standard algorithm	Rate period specific billing
First three minutes - no discount	$2.00	$2.00
First additional minute - $0.70 @ 1/3 off	$0.47	$0.47
Six additional minutes - $0.70 @ 1/3 off	$2.80	-
Six additional minutes - $0.70 @ 2/3 off	-	$1.40
Total Charge	$5.27	$3.87

Determining when fractional tax should be calculated

The fractional tax feature enables you to calculate the tax for a call calculated to within one tenth of one percent. Check the Operating Company policy for calculating taxes before using this feature.

When calculating the charge for a call, the DMS TOPS rating system uses the following information:

- the tax rate
- the rounding factor
- the amount to be taxed

The fractional tax feature allows tax rates to be expressed as real numbers. This capability is implemented through the TAXES table. The rate fields (RATE1, RATE2, RATE3) of the TAXES table contain a place holder that allows an entry of 68 to be interpreted as 6.8 percent.

Previously, the tax rate could be expressed only as an integer, meaning a fractional portion of the tax rate could not be used. In this case, an entry of 68 would be have been interpreted as 68 percent.

The decimal point in the rate (RATE1, RATE2, RATE3) fields of the TAXES table extends only to one place. Thus, to specify a rate of 7 percent, a rate field should be set to 70, not 7. Setting to the field to 7 would cause the system to interpret the tax rate as 0.7 percent.

TOPS Call Processing Features (Rating) (continued)

Determining when carrier rating should be applied

The TOPS inter-LATA carrier service (TICS) feature allows an Operating Company to provide rating for the inter-LATA calls of all carriers for which operator services are provided. The number of tariffs not used by the Operating Company itself can be used for these carriers.

The carrier tariff (CARRTRF) table defines the tariffs used for the rating of inter-LATA calls that originate on private and public (coin, hotel, non-coin) lines. These tariffs are based on a carrier name, an NPA code, and an NXX code.

Providing manual billing of inter-LATA calls

When an Operating Company provides operator services for a carrier, only the following types of billing are used for the inter-LATA calls associated with that carrier. The types of billing that the carrier requires are specified in the TOPEACAR table:

- automatic rating system billing (public and private rating)
- calling card, third number, and collect number billing

If the subscriber requests that a non-PIC carrier be used for a call, the operator must reenter the billing information and change the carrier for the call.

Automatic rating system billing

The carrier has the option of using the TOPS automatic rating system for private telephones, public telephones (coin, non-coin, hotel), or both. The entries in the PUBRATE and the PRIVRATE fields of the TOPEACAR table determine whether public or private rating is allowed (Y) or disallowed (N).

Public Rating

If public rating is allowed, the automatic coin toll service (ACTS) is used for 1+ coin calls. When these calls arrive at the Operator Position, STA<PD> and NORATE appear on the position screen. The PD message is flashing; the NORATE message is steady. All sent-paid inter-LATA calls from a public station are also allowed.

If public rating is disallowed, a 1+ coin call does not go to ACTS. Rather, it goes to the operator where all sent-paid billing classes (station paid, person

TOPS Call Processing Features (Rating) (continued)

paid, and time and charges) are blocked. The following table describes the billing interactions for this type of rating.

Public rating of inter-LATA calls

PUBRATE	Billing status	ACTS
Y	STA_PD allowed	Y
	PER_PD allowed	
	T&C allowed	
N	STA_PD disallowed	N
	PER_PD disallowed	
	T&C disallowed	

Private Rating

If private rating is allowed, time and charges can be quoted for calls from private stations.

If private rating is disallowed, time and charges cannot be quoted for calls from private stations. The following table describes the billing interactions for this type of rating.

Private rating of inter-LATA calls

PRIVRATE	Billing status
Y	T&C allowed
N	T&C disallowed

Calling card billing

If calling card billing of inter-LATA calls is allowed for a carrier, certain fields in the TOPEACAR table must be set accordingly.

If the carrier has access to the calling card database for common channel interoffice signaling (CCIS), the database can be queried if the CCVQUERY field in table TOPEACAR is set to QUERY. This allows the mechanized calling card service (MCCS) feature to handle 0+ calling card calls.

If the carrier allows calling card billing but does not have access to the CCIS data base, the carrier can request that a NOQUERY message be displayed on the Operator Position CRT (CCVQUERY=NOQUERY) and that manual validation be performed (CCVVAL=Y) by the operator. However, even if no QUERY or MANUAL validation (CCVVAL=N) is performed, MCCS can still

handle 0+ calling card calls. A NOQUERY condition is indicated by the display of the message, AMA VFY, on the Operator Position CRT. The display will also show either MAN or NFY following the credit card number.

If the carrier does not allow calling card billing, any attempt by a subscriber to use this type of billing for an inter-LATA call is blocked (CCVQUERY=BLK). The following table describes the billing interactions.

Calling card billing for inter-LATA calls

Query status	Manual validation status	Billing status	MCCS status
QUERY	N	STA_SPL_CLG allowed STA_SPL_CLD allowed PER_SPL_CLG allowed PER_SPL_CLD allowed	Y
NOQUERY	N	STA_SPL_CLG allowed STA_SPL_CLD allowed PER_SPL_CLG allowed PER_SPL_CLD allowed	Y
NOQUERY	Y	STA_SPL_CLG allowed STA_SPL_CLD allowed PER_SPL_CLG allowed PER_SPL_CLD allowed	N
BLK	N	STA_SPL_CLG disallowed STA_SPL_CLD disallowed PER_SPL_CLG disallowed PER_SPL_CLD disallowed	N

Third number billing

Certain fields in the TOPEACAR table must be set accordingly if third number billing of inter-LATA calls is allowed for a carrier.

If the carrier has access to the database for CCIS billed number screening (BNS), the database can be queried if the BNSQUERY field in table TOPEACAR is set to QUERY. After the query has been performed, the operator can perform manual validation (BNSVAL=Y).

If the carrier does not have access to the BNS data base, no data base query (BNSQUERY=NOQUERY) can be performed; however, manual validation can be performed if the BNSVAL field is set to Y. Third number billing is

TOPS Call Processing Features (Rating) (continued)

blocked only if the BNSQUERY field is set to BLK. The following table describes the billing interactions.

Third number billing for inter-LATA calls

Query status	Manual validation status	Billing status
QUERY	Y	STA_SPL_CLG allowed STA_SPL_CLD allowed PER_SPL_CLG allowed PER_SPL_CLD allowed
QUERY	N	STA_SPL_CLG allowed STA_SPL_CLD allowed PER_SPL_CLG allowed PER_SPL_CLD allowed
NOQUERY	Y	STA_SPL_CLG allowed STA_SPL_CLD allowed PER_SPL_CLG allowed PER_SPL_CLD allowed
NOQUERY	N	STA_SPL_CLG allowed STA_SPL_CLD allowed PER_SPL_CLG allowed PER_SPL_CLD allowed
BLK	N	STA_SPL_CLG disallowed STA_SPL_CLD disallowed PER_SPL_CLG disallowed PER_SPL_CLD disallowed

Collect number billing

Certain fields in the TOPEACAR table must be set accordingly if collect number billing of inter-LATA calls is allowed for a carrier.

If the carrier has access to the database for CCIS billed number screening (BNS), the database can be queried if the COLQUERY field in table TOPEACAR is set to QUERY. Setting the COLQUERY field to NOQUERY prohibits database access. In this case, manual validation can be performed if

the COLVAL field is set to Y. The following table describes the billing interactions.

Collect number billing for inter-LATA calls

Query status	Manual validation status	Billing status
QUERY	Y	STA_COL allowed PER_COL allowed
QUERY	N	STA_COL allowed PER_COL allowed
NOQUERY	Y	STA_COL allowed PER_COL allowed
NOQUERY	N	STA_COL allowed PER_COL allowed
BLK	N	STA_COL disallowed PER_COL disallowed

Providing automatic billing of inter-LATA calls

The TOPS equal access feature provides a set of structure codes (047XX) that allow billing records to be generated for CAMA and for non-CAMA calls. The TOPEACAR table defines the billing for each carrier served by the Operating Company.

In a DMS-200 with the TICS software, CAMA billing is activated by setting the OPSERV field in the TOPEACAR table to SERV or by setting the CAMABILL field to Y if the OPSERV field is set to NOSERV. In a DMS-200 without the TICS software, CAMA billing is activated by setting the CAMABILL field to Y. The CAMABILL field is in the TOPEACAR table.

Note: If the CAMABILL field is set to Y, the ANI field in the TRKGRP (ATC) table must be set to N.

The AMA record format provided by the 047XX structure code is very similar to the format provided by the 007XX structure code. The following table shows the fields that are appended to the 007XX record format to create the 047XX record format.

TOPS Call Processing Features (Rating) (continued)

Structure code 047XX

Inter-LATA carrier/international carrier event information	Number of characters
IC/INC prefix	6
Event date	6
Event time	8
Elapsed time	10
IC/INC call event status	4
Trunk group number	6
IC/INC routing indicator	2
IC/INC dialing indicator	2
IC/INC ANI indicator	2

The following table lists the structure codes used to produce the AMA records for different types of calls.

Structure codes

SERVTYPE	CAMABILL	Inter-LATA call type	Structure code produced
SERV	Y	0-, 0+, 1+	047XX
SERV	N	0-, 0+	047XX
SERV	N	1 +	007XX
NOSERV	Y	1 +	047XX
NOSERV	Y	0 -, 0+	007XX
NOSERV	N	0-, 0+, 1+	007XX

Effect of the NO AMA key on AMA for TICS

The function of the NO AMA key changes when a call is completed by a carrier for which the Operating Company provides operator service under TICS. For such calls, if the NO AMA key is pressed, the call will route to the CLSVSCRC table. TOPS equal access routing is not bypassed. The AMA

record produced for this type of call is a call code 035 record with an X47XX structure code.

The effect of the NO AMA key does not change when the call is a carrier call, and the Operating Company does not provide operator service for that carrier. In this situation, pressing the NO AMA key causes the route in the CLSVSCRC table to be ignored and the call routes to standard translation (HNPACONT table). The AMA record produced for this type of call is a call code 035 record with an XX7XX structure code.

Calls abandoned before connection to carrier is established

Normally, if a call arrives at the Operator Position and is canceled before connection to the carrier is established, the record date and record time fields contain zeros and the carrier connect (CC) date and CC time fields contain the time of the last restart. (The CC date and CC time fields are also called event date and event time fields.)

However, for TICS, the Operating Company bills the carrier for the operator work time, and therefore needs the information in the record date and time fields. Thus, for TICS, the abandon time will be recorded in the record date and time fields and in the CC date and time fields. The time will be the same in both fields. However, a slight difference might exist between the record time and the CC time fields since one is recorded to the second and the other is recorded to the tenth of a second.

The abandon time will be recorded for canceled calls, credit adjustment calls, and calls that are routed to treatment.

Establishing rating for service calls

Service calls are identified entirely on the basis of the called number. To make this identification, the SERVSCRN table is used. Any 3-, 7-, or 10-digit number can be listed as a service number.

When a number is identified as a service number in the SERVSCRN table, it is associated with a service name. This name is defined by the Operating Company in the same manner as tariffs, schedules, or CLLI names. The SERVNAME table contains all service names. These names index the SRVRS table, which rates this billing type.

The SRVRS table has a two-part key. The first part of this key is the tariff. Tariffs are defined in the TARIFF table. They are defined by the Operating Company and are based on the calling NPA and NXX. The CLGTRF table associates a name defined in the TARIFF table with a particular calling NPA or calling NPA NXX. The second part of the key is the service name obtained

TOPS Call Processing Features (Rating) (continued)

from the SERVSCRN table. Each tariff and service name is associated with a schedule and rate step. These schedules and rate steps exist in the standard rating system. If all 555 numbers are the same service type, the line numbers are not entered into the SERVSCRN table. Only NPA-555 is entered for all NPAs. A number is a service number if it is found in the SERVSCRN table.

Identifying toll free calls

For Operating Companies that do not charge for certain service numbers, these numbers are toll free. To allow the Operating Company to specify the toll free number, the symbol TOLLFREE is predefined in the SERVNAME table. This symbol indicates that a number or a group of numbers is toll free. Since no rating is made for a toll free call, the TOLLFREE symbol cannot appear in the SRVRS table. If a toll free number is dialed from either a hotel or a coin phone, it bypasses operator handling in the same way directory assistance calls bypass operators in areas that do not charge for DA services.

Setting up rating for service numbers

The following examples show how the service call rating tables SERVSCRN, SERVNAME, and SRVRS can be used to set up the rating for special numbers.

Example 1 - rating service calls

In this example, the Operating Company intends to set up one rate for local long distance directory assistance and another rate for foreign long distance directory assistance. The Operating Company defines a tariff as TARIFF1, a schedule as SCHED1, and the only valid 555 number as 555-1212. The procedure is as follows:

1. Define the service rating names to be used in the SERVNAME table. The service rating names in this example are the predefined symbol TOLLFREE and the symbols FOREIGNDA and LOCALDA, which are defined by the Operating Company.
2. Enter data in the SERVSCRN table. For each foreign NPA, you must make an entry in the SERVSCRN table indicating that NPA 555 is a service number and with the service rating name FOREIGNDA. Also, for 555, you must make an entry indicating that it is a service number with the service name LOCALDA.
3. Enter data in the SRVRS table. The implication of the SRVRS table is that all calls to directory assistance in a foreign NPA receive one charge, while calls to local directory assistance receive another. The actual amount is specified using the standard charging tables and the specified schedule name and rate step.

TOPS Call Processing Features (Rating) (continued)

MAP display example for table SERVNAME for rating service calls

```
VALUE      SYMBOL
-----      ------
  1        TOLLFREE
  2        FOREIGNDA
  3        LOCALDA
```

MAP display example for table SERVSCRN for rating service calls

```
CLDNUM              SERVNAME
------              --------
202555              FOREIGNDA
203555              FOREIGNDA
204555              FOREIGNDA
   .                    .
   .                    .
   .                    .
519555              FOREIGNDA
 555                LOCALDA
602555              FOREIGNDA
603555              FOREIGNDA
604555              FOREIGNDA
   .                    .
   .                    .
   .                    .
919555              FOREIGNDA
```

MAP display example for table SRVRS for rating service calls

```
SRVKEY                SCHNAME      RATESTEP
------                -------      --------
TARIFF1 FOREIGNDA     SCHED1          1
TARIFF1 LOCALDA       SCHED1          2
```

Example 1 - rating service call

This example is a continuation of example 1. The Operating Company specifies different charges for 555-1212, 555-1111, and 555-1211. The Operating Company provides weather information if a subscriber dials 555-1111 and the exact time of day if a subscriber dials 555-1211. Note that 555 is an example of a possible service NXX. You can establish these services by using datafill similar to the following.

TOPS Call Processing Features (Rating) (continued)

MAP display example for table SERVNAME for rating service calls

```
 VALUE                    SYMBOL
 ------------------------------------
    1                  TOLLFREE
    2                  FOREIGNDA
    3                  LOCALDA
    2                  WEATHERINFO
    3                  TIMEOFDAY
```

MAP display example for table SERVSCRN for rating service calls

```
 CLDNUM          SERVNAME
 ------------------------------
 202555          FOREIGNDA
 203555          FOREIGNDA
 204555          FOREIGNDA
    .                  .
    .                  .
    .                  .
 519555          FOREIGNDA
 5551111         WEATHERINFO
 5551211         TIMEOFDAY
 5551212         LOCALDA
 411             TOLLFREEDA
 602555          FOREIGNDA
 603555          FOREIGNDA
 604555          FOREIGNDA
    .                  .
    .                  .
    .                  .
 919555          FOREIGNDA
```

MAP display example for table SRVRS for rating service calls

```
      SRVKEY              SCHNAME       RATESTEP
 ------------------------------------------------------
   TARIFF1 FOREIGNDA       SCHED1          1
   TARIFF1 WEATHERINFO     SCHED1          3
   TARIFF1 TIMEOFDAY       SCHED1          4
   TARIFF1 LOCALDA         SCHED1          2
```

To rate the numbers differently, you must datafill to the line-number level of the SERVSCRN table. For each number that must be rated differently, a new service rating name is created. Data is provided in the SRVRS table for each service name.

TOPS Call Processing Features (Rating) (continued)

Example 3 - rating service calls

In this example, the Operating Company intends to treat all calls with an NXX of 555 as toll free and defines the only valid 555 number as 555-1212.

The special rating name TOLLFREE is predefined in the SERVNAME table. You must enter data in the SERVSCRN table. For each foreign NPA, there must be an entry in the SERVSCRN table indicating that NPA 555 is a service number with the service rating name TOLLFREE. Note that there are no entries in the SRVRS table for toll free calls.

MAP display example for table SERVNAME for rating service calls

```
VALUE        SYMBOL
1            TOLLFREE
```

MAP display example for table SERVSCRN for rating service calls

```
CLDNUM                SERVNAME
202555                TOLLFREE
203555                TOLLFREE
204555                TOLLFREE
   .                     .
   .                     .
   .                     .
519555                TOLLFREE
555                   TOLLFREE
602555                TOLLFREE
603555                TOLLFREE
604555                TOLLFREE
   .                     .
   .                     .
   .                     .
919555                TOLLFREE
```

MAP display example for table SRVRS for rating service calls

```
SRVKEY        SCHNAME        RATESTEP
```

Note: This is an empty table.

TOPS Call Processing Features (Rating) (continued)

Considering service call feature limitations

The following three restrictions apply to the service call feature:

- A maximum of 62 service names can be created by an Operating Company
- A called number should not be datafilled both as a local call and as a service call. If it is, the service designation will be accepted.
- To be rated, a call with a service called number must complete and an answer must be provided. If not, it is treated as other calls that do not complete or do not receive an answer (i.e., no charges are recorded for the call).

For example, if a subscriber dials 1-555-1212 and the call routes to an operator who provides the directory assistance information without forwarding the call, the call cannot be rated. However, if the operator forwards the call to a directory assistance center and then floats the call, rating can be performed at the Operator Position. This scenario is important if the call originates from a coin phone.

Considering service call feature interactions

The TOPS service number billing feature is compatible with the mechanized calling card service (MCCS) and the automatic coin toll service (ACTS) features.

When the DMS software includes all of these features, the subscriber can dial 0 plus a service number and bill the call to a calling card number. A subscriber at a coin station can dial 1 plus a service number and pay for the call without being routed to an operator. In the latter case, the charges for a service call probably would not be a function of time. The ACTS announcement is modified not to include a reference to time if the billing is not a function of time. Billing for a service number is not expected to be a function of time and a credit announcement is not given on subscriber over-deposits. The Thank you announcement is played to the subscriber, and the forward number is outpulsed.

If a number is determined to be a service number after checking the SERVSCRN table, LATA screening is not done. Routing is based on the routes set by standard DMS translations.

Marking called numbers as service in the SERVSCRN table affects the ability of the Operating Company to route calls in an equal access environment. Some Operating Companies have an agreement stating that the Operating Company routes directory assistance calls in which the calling subscriber dials 555-1212, but an inter-LATA carrier routes the calls if the calling subscriber dials NPA-555-1212. You must enter 555-1212 in the SERVSCRN table with

an appropriate designation, such as LOCALDA. The numbers are then routed using the standard DMS translation routes. However, you do not enter a number of the form NPA-555-1212 into the SERVSCRN table. These numbers are allowed to move onto LATA screening where they are identified as inter-LATA calls. The numbers are then routed using the TOPS equal access routing scheme.

All 800 number calls from coin phones continue to bypass operator handling. Also, 800 number calls from hotels continue to only route to an operator for the collection of a room number if the hotel has no-charge messages. Numbers preceded by 800 are not allowed in the SERVSCRN table.

The TOPS service number billing feature applies both to service numbers dialed by the calling subscriber and to service numbers completed by an operator using the KP forward key or an outgoing trunk key.

Datafilling the rating system tables

The data structure for each Operating Company varies, depending on the number of places to be automatically rated and the method of rate step calculation assigned to each place.

The data in the tables is defined by the Operating Company and used by Northern Telecom when compiling the office load. The data in the TARIFF and SCHNUM tables are required Operating Company input. However, the data in these tables is only used by the rating system for indexing.

The mileage calculation requires the use of the upper mileage bands assigned by the Operating Company and an algorithm that resides in the software programs, which does not require Operating Company input.

Datafilling V-H coordinates using Nortel assistance

Nortel provides an engineering aid to assist with datafilling table VH for initial installations and software extensions.

Permanent records of the V-H coordinates of all NPA-NXX combinations in North America are used to datafill table VH. Nortel's service reduces the costs to the Local Exchange carrier by eliminating manual V-H data assignment, thus improving the accuracy of the table.

You must submit a preliminary input of NPAs to Nortel for use in creating the data. Arrangements to have Nortel create the VH rating data must be made with Nortel Engineering.

TOPS Call Processing Features (Rating) (continued)

Verifying datafill using the rating test program

The DMS/TOPS rating test program (RATE) is designed to assist the Operating Company with the verification of the rating system datafill. The rating test program makes it possible for the Operating Company to:

- enter the relevant details of a test call at the CI level of the Maintenance and Administration Position (MAP),
- specify whether the active or inactive data tables will be used in the test,
- request a rate step and/or charge calculation for the test call, and
- display the results at the terminal.

The test program is completely independent of TOPS call processing and Operator Positions. For more information about the rating test program, refer to the data schema section of this document, Table SCHNUM.

Keeping the rating system up to date

Changes to the rating system are normally the result of one or more of the following:

- changes to the tariffs (e.g., the addition of one or more tariffs)
- changes to rate schedules (e.g., additional time may be added to an existing discount period)
- changes to rate areas (e.g., a township may be added to an existing rate area)
- changes to DMS/TOPS software (e.g., the DMS/TOPS may be upgraded to a new BCS).

Mass table control

The DMS/TOPS automatic rating system reads from approximately 25 interdependent Operating Company data tables to rate a call. Periodically, because of events such as major rate schedule changes, it is necessary to make a large number of simultaneous rating table data changes.

Mass table control (MASSTC) is a utility within the TOPS framework that allows the Operating Company to modify the rating tables without affecting current call processing. The majority of the TOPS rating tables are duplicated. The duplicated tables are called the inactive tables and are suffixed by the letter “i"; for example, Table CHARGE is the active table and Table CHARGI is the inactive table.

When the Operating Company must make changes to the rating tables, they can use the MASSTC facility to duplicate the data from the active tables to the inactive tables and make the necessary changes to the inactive tables. Once the

changes are made, they can then use the RATE program to test their data changes. Once everything checks out, they can, using MASSTC, switch the data from the inactive tables to the active tables.

> ***Note:*** When working with the inactive tables, normal inter-table data dependency checking will still take place. This precautionary step is necessary to prevent data corruption.

The MASSTC facility provides the Operating Company with the following commands:

MASSTC Commands

```
>masstc
FOR  DOCUMENTATION,  ENTER  HELP
 INITIAL  STATE
NO  INACTIVE  DATA
MASSTC:
>help
TOPS  MASS  TABLE  CONTROL.
THE  FOLLOWING  SUBCOMMANDS  ARE  AVAILABLE:
HELP        – DISPLAY  COMMAND  DOCUMENTATION
STATUS      – DISPLAY  THE  CURRENT  STATUS  OF  THE  MASS  TABLE
              CONTROL  SYSTEM
DUPLICATE   – COPY  THE  CONTENTS  OF  EACH  ACTIVE  TABLE  INTO  THE
              CORRESPONDING  INACTIVE  TABLE
ENABLE      – GO  FROM  THE  INITIAL  STATE  TO  THE  DUPLICATED
              STATE  (LIKE  DUPLICATE),  BUT  WITHOUT  COPYING  TABLE
              CONTENTS
            – ALLOWS  INACTIVE  TABLES  TO  BE  FILLED  WITH  COMPLETELY
              NEW  DATA
ACTIVATE   OLD :  NEW
            – SWAP  THE  CONTENTS  OF  THE  ACTIVE  AND  INACTIVE  TABLES
            – ACTIVATE  NEW  MAKES  THE  NEW  DATA  ACTIVE
            – ACTIVATE  OLD  MAKES  THE  OLD  DATA  ACTIVE
PERM        – ERASE  OLD  DATA
            – OLD  DATA  MUST  BE  INACTIVE  WHEN  PERM  IS  ISSUED
SCRAP       – ERASE  NEW  DATA
            – NEW  DATA  MUST  BE  INACTIVE  WHEN  SCRAP  IS  ISSUED
QUIT        – LEAVE  THE  MASSTC  LEVEL
            –RESET  MASSTC  IF  DUPLICATE  COMMAND  FAILS
LEAVE       – LEAVE  THE  MASSTC  LEVEL
```

For more information about mass table control, refer to the data schema section of this document, table CHARGEI; also, the *DMS-100 Family Commands Reference Manual*, 297-1001-822.

TOPS Call Processing Features (Rating) (continued)

Rating system dataflow

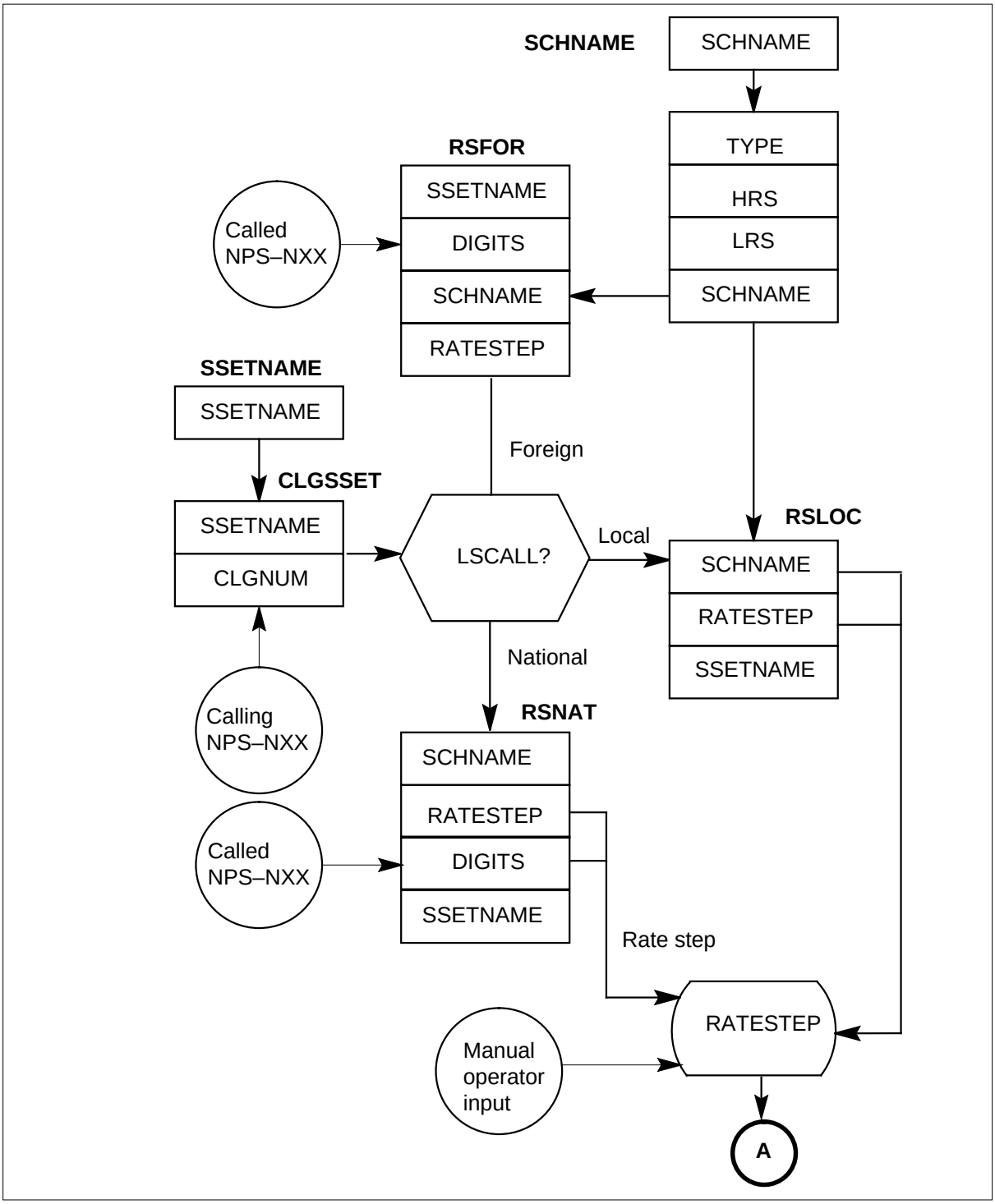

TOPS Call Processing Features (Rating) (continued)

Rating system dataflow (continued)

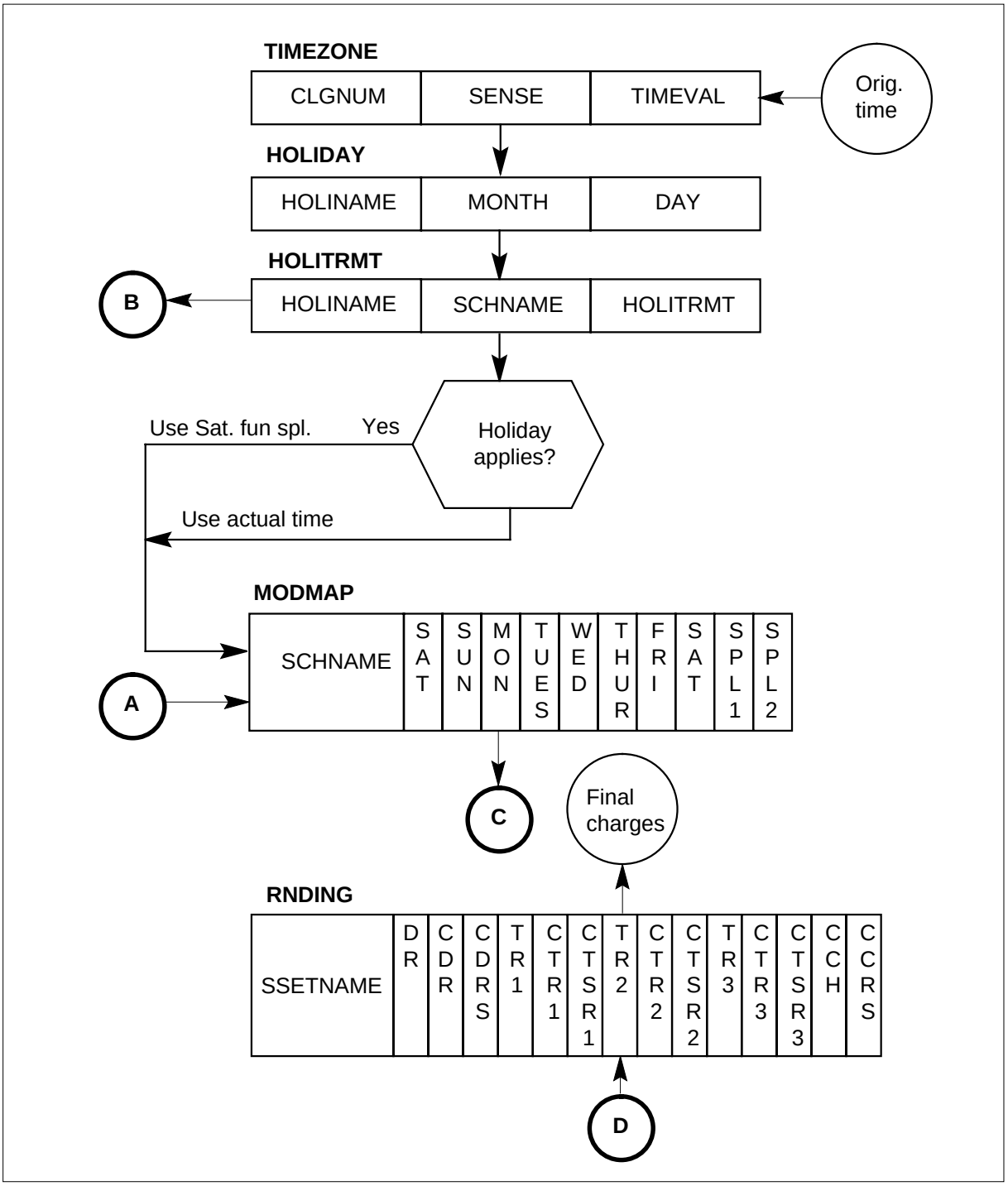

TOPS Call Processing Features (Rating) (continued)

Rating system dataflow (continued)

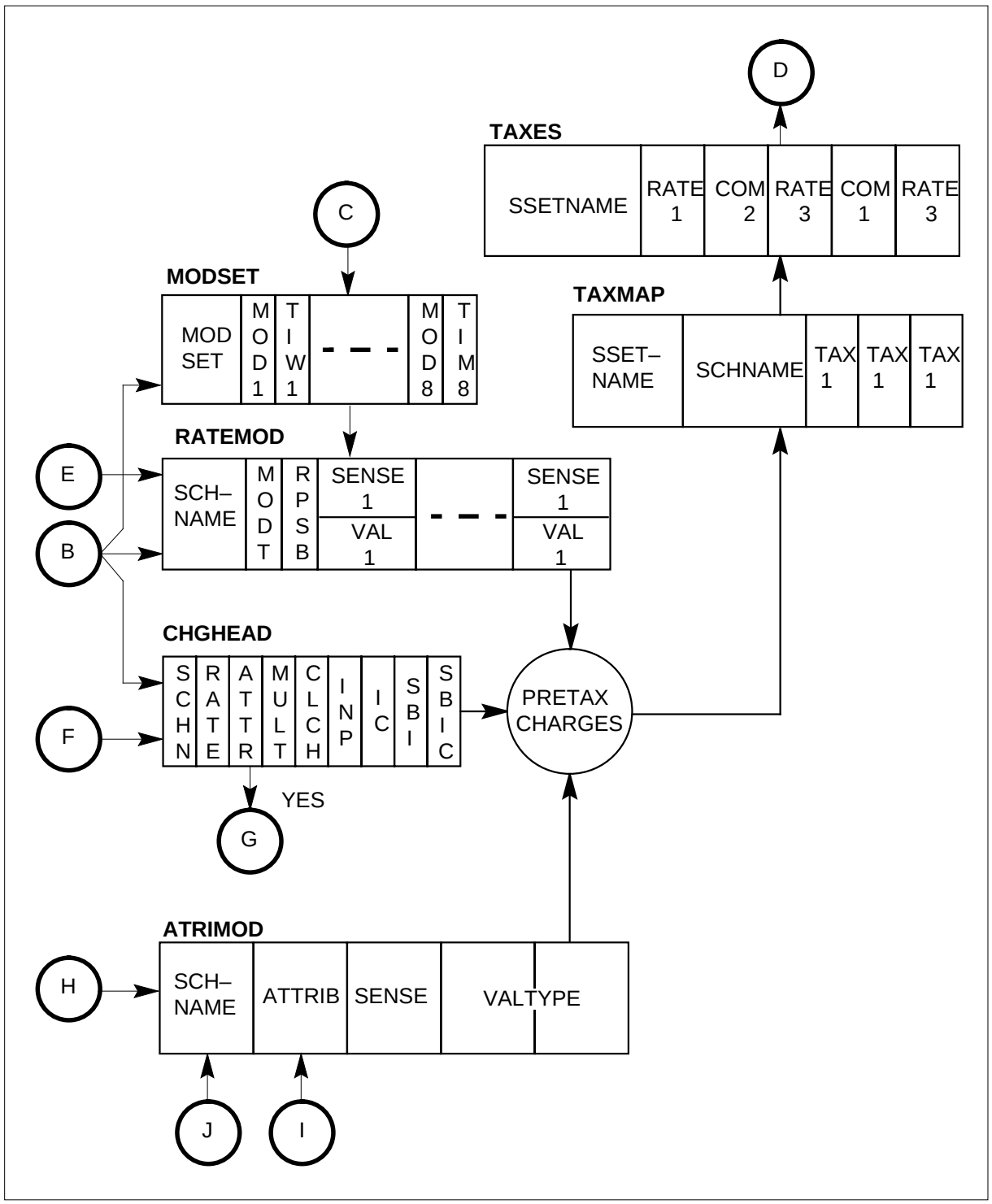

TOPS Call Processing Features (Rating) (continued)

Rating system dataflow (continued)

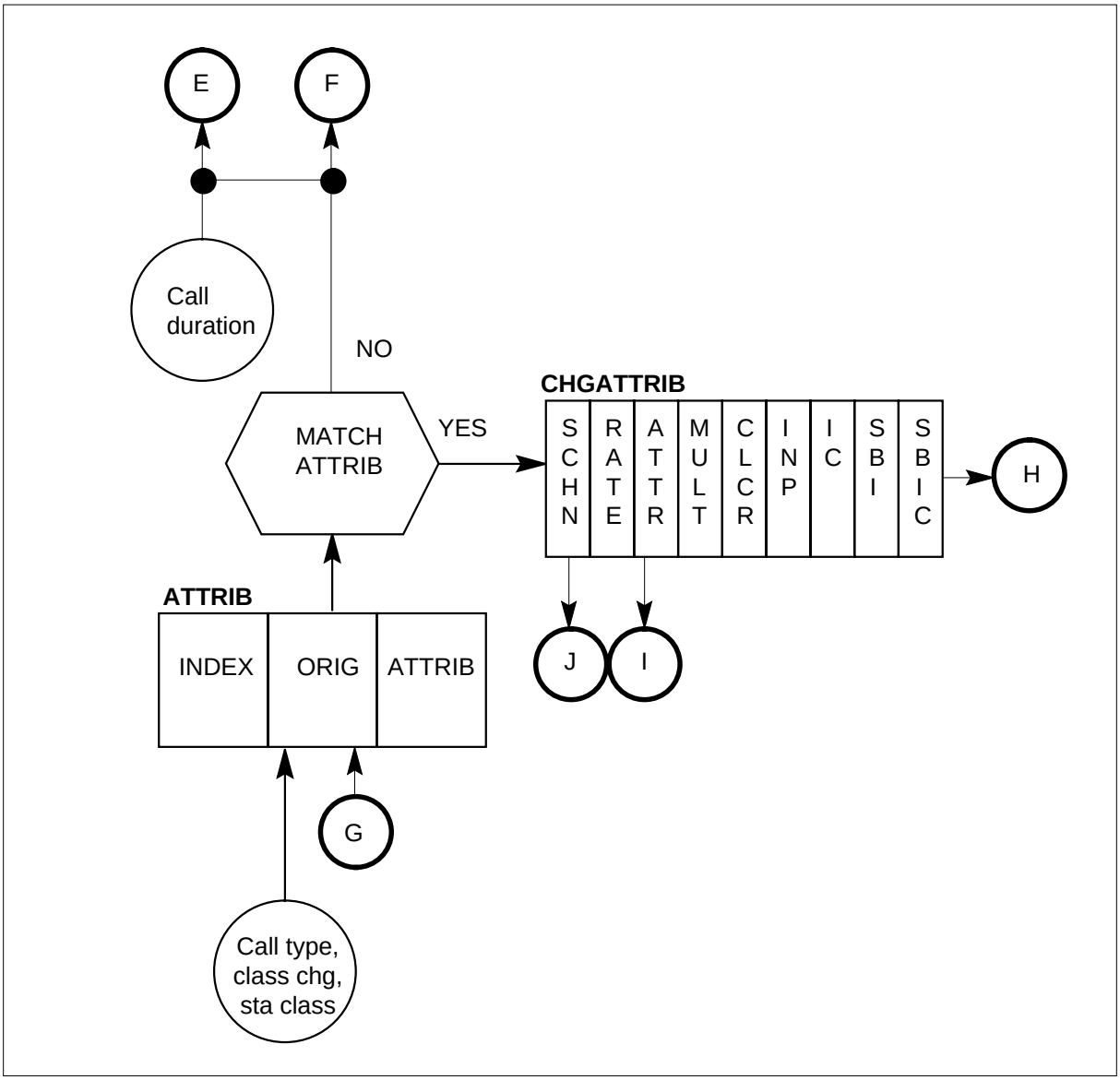

Example Rate Calculations

This section contains example rate calculations for domestic toll, local, and overseas calls. Each example identifies the steps taken by the DMS to use the table datafill to calculate the charge, and provides a table association flowchart.

For a Domestic Toll Call

Steps 1 through 18 in the procedure on the following pages describe how the DMS/TOPS rating system calculates the rate for an automatically rated

TOPS Call Processing Features (Rating) (continued)

domestic toll call. Follow the procedure in conjunction with the following example. The following call details apply:

Calling #	613–239–1234
Called #	212–220–1234
Date	Sun. Mar. 02.80
Time	15:05 hours
Call type	0+
Station class	NCN
Class charge	Station
Billing type	Paid with T&C
Conversation time	10 minutes

The TOPS call processing system identifies this as a ratable domestic call to the rating system. The details of the call are passed by way of the TOPS Recording Unit (TRU). Rating takes place at the end of the call because it is NCN. Only charges are calculated (i.e., taxes are not calculated).

Domestic toll call rating example: Follow this procedure in conjunction with the following flowchart and the example call details provided above:

1. The CLGTRF table is indexed by calling NPA-NXX 613-239 (from TRU). Tariff Bellont is assigned to 613-239 as defined in the TARIFF table. This information is retained throughout the call.
2. The CLDNPA table is indexed by called NPA 212 (from TRU) and tariff Bellont is obtained from the CLGTRF table. The schedule name applicable to this call is Canusa as defined in the SCHNUM table. This information is retained throughout the call. The rate type is VH.
3. Rate type VH in the CLDNPA table indicates that the rate distance is calculated on the basis of V-H coordinates. Determine the rate distance and schedule name, then determine the rate step. The V-H coordinates for the calling and called points are in the VH table and are indexed by the calling and called NPA-NXX (from the TRU). These numbers are no longer required for rating.
4. The V-H coordinates are manipulated by the resident algorithm, producing a rate distance of 337 miles.

5. Schedule name Canusa, selected in CLDNPA table, indexes the MILES table. If the rate distance equals UMB, the corresponding rate step is selected.

   - A search is made for a matching upper mileage band (UMB). A matching UMB is not found, so the next higher UMB of 345 miles is selected.
   - The rate step corresponding to 345 miles is 37. This information is retained throughout the call

   If the rate distance equals UMB, the corresponding rate step is selected.

6. The SCHED table is indexed by schedule name Canusa. Schedule type *std* (standard) is reserved for use at step 11.

   Other data in the SCHED table is not required for rating this call.

7. The date (from TRU) is March 2, 80. The date indexes the HOLDAY table that contains a list of dates qualifying for holiday treatment. March 2 is not a holiday. Therefore, the HOLTRT table is bypassed.

8. The class charge is station, and the day of week that March 2, 80, falls on is Sunday (from TRU). Using schedule name Canusa to index the RBKMAP table, a search is made for the rate break set applicable for a station Sunday call. The Rbkset is 1. The date is no longer required for rating.

9. The RBKSET table is indexed by Rbkset 1. Time 1..8 shows the end time of a rate break period, and Rbk 1..8 shows the applicable discount. Time 1 is 0800 hours. Thus, any call with an answer time from 0000 to 07.59.59 hours is subject to the discount in D2. Time 2 is 2400 hours. Since this call falls between 0800 and 2400 hours (origination time from TRU is 15:05), the discount in D1 applies. The time is no longer required for rating.

10. The DCOUNT table, indexed by schedule name Canusa, shows Disc = pcent. This means that the discounts are expressed in percentages. D1 = 35 and Dinp = N. Therefore, this call is entitled to 35% OFF the overtime minutes or 65% of the normal rates.

11. Schtype = std (SCHED table) and Disc = pcent (DCOUNT table) signify that there could be a maximum of two charge tables. Standard charge tables only distinguish rates based on class charge. Thus, the call type and station class (from TRU) are not required in rating this call. The CHGMAP table is indexed by schedule name Canusa. No mapping is found; therefore, the maximum number of tables is specified in the CHARGE table.

12. The class charge of the station (from TRU) is used along with the schedule name and rate step (MILES table) to index the CHARGE table.

TOPS Call Processing Features (Rating) (continued)

13. The first 3 min. = $1.75 (CHARGE table).
14. The next 7 min. = $2.00 (DCOUNT, CHARGE, and ROUND Tables specify that the overtime charge is equal to 65% [7 min. x $0.44]).
15. The result $2.002 is rounded to the nearest penny based on a factor of 50.
16. Rounding factor of 5 (ROUND table). The conversation time is no longer required for rating.
17. Class charge is 0 (CHARGE table). Surcharge is 0 (SUR table indexed by schedule name Canusa). The class charge and billing are no longer required for rating.
18. The total $3.75 is displayed in the T&C message.

TOPS Call Processing Features (Rating) (continued)

Rating example - domestic toll call

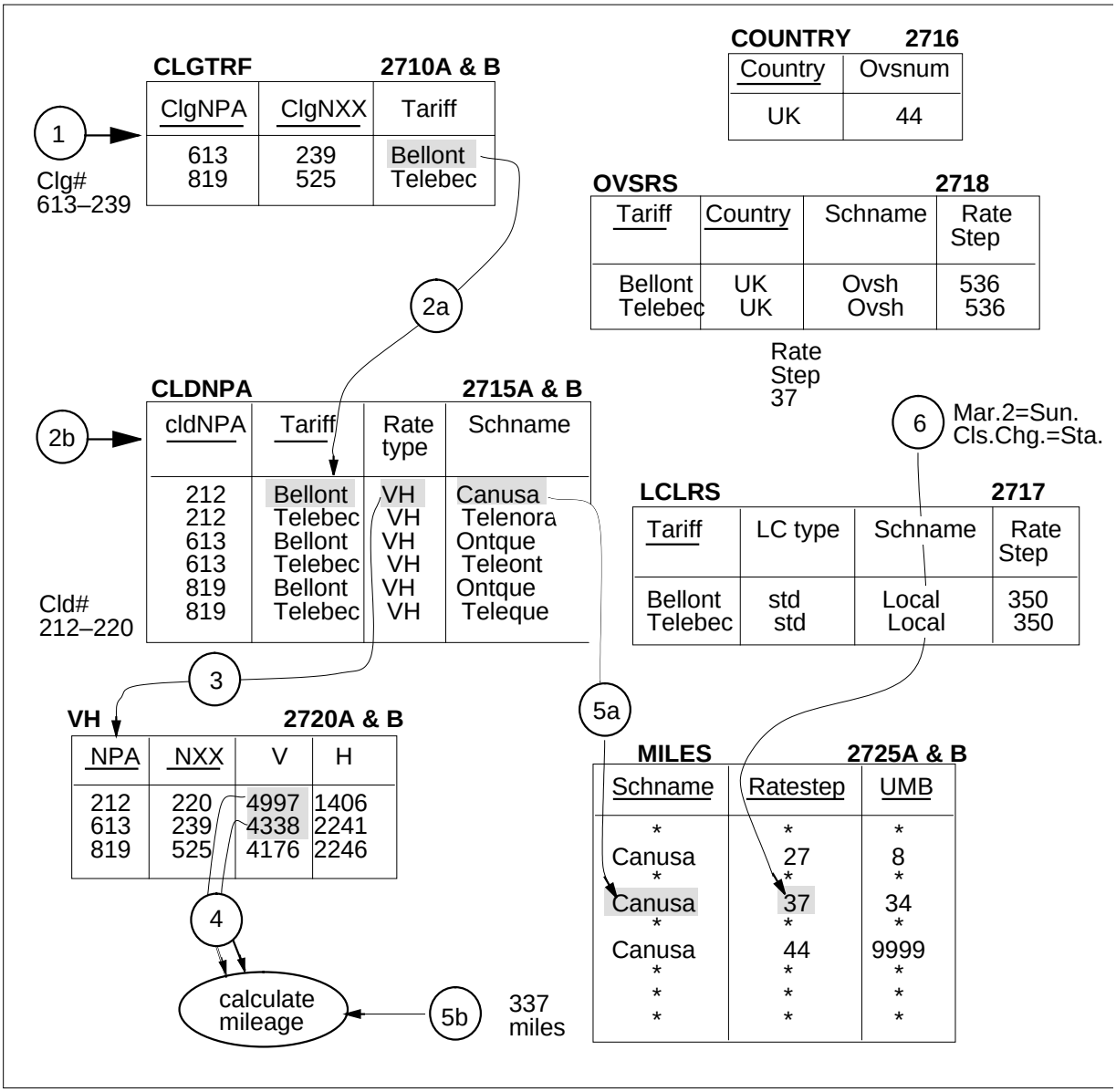

TOPS Call Processing Features (Rating) (continued)

Rating example - domestic toll call

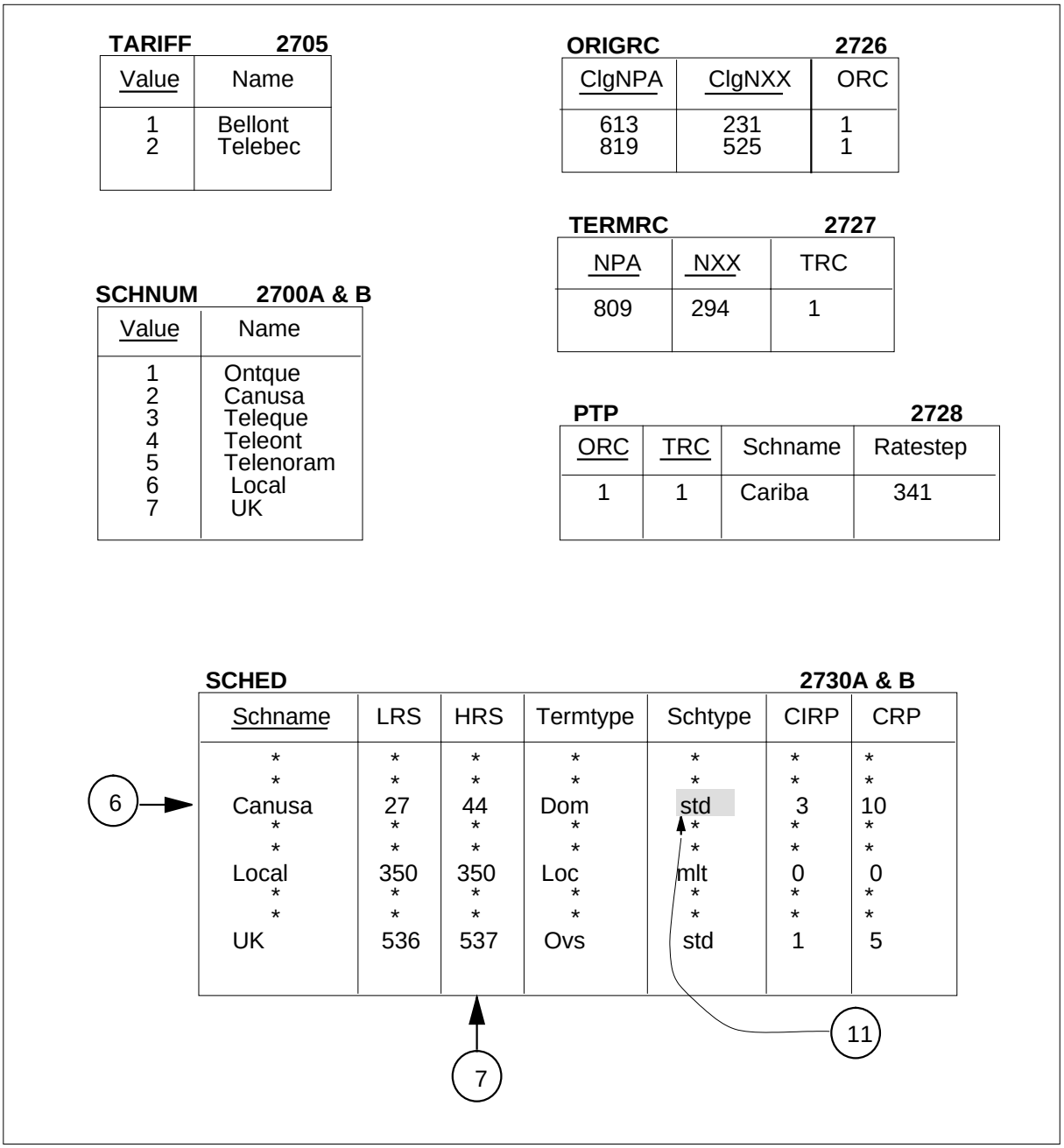

TARIFF 2705

Value	Name
1	Bellont
2	Telebec

ORIGRC 2726

ClgNPA	ClgNXX	ORC
613	231	1
819	525	1

TERMRC 2727

NPA	NXX	TRC
809	294	1

SCHNUM 2700A & B

Value	Name
1	Ontque
2	Canusa
3	Teleque
4	Teleont
5	Telenoram
6	Local
7	UK

PTP 2728

ORC	TRC	Schname	Ratestep
1	1	Cariba	341

SCHED 2730A & B

Schname	LRS	HRS	Termtype	Schtype	CIRP	CRP
*	*	*	*	*	*	*
*	*	*	*	*	*	*
Canusa	27	44	Dom	std	3	10
*	*	*	*	*	*	*
*	*	*	*	*	*	*
Local	350	350	Loc	mlt	0	0
*	*	*	*	*	*	*
*	*	*	*	*	*	*
UK	536	537	Ovs	std	1	5

6

7

11

TOPS Call Processing Features (Rating) (continued)

Rating example - domestic toll call

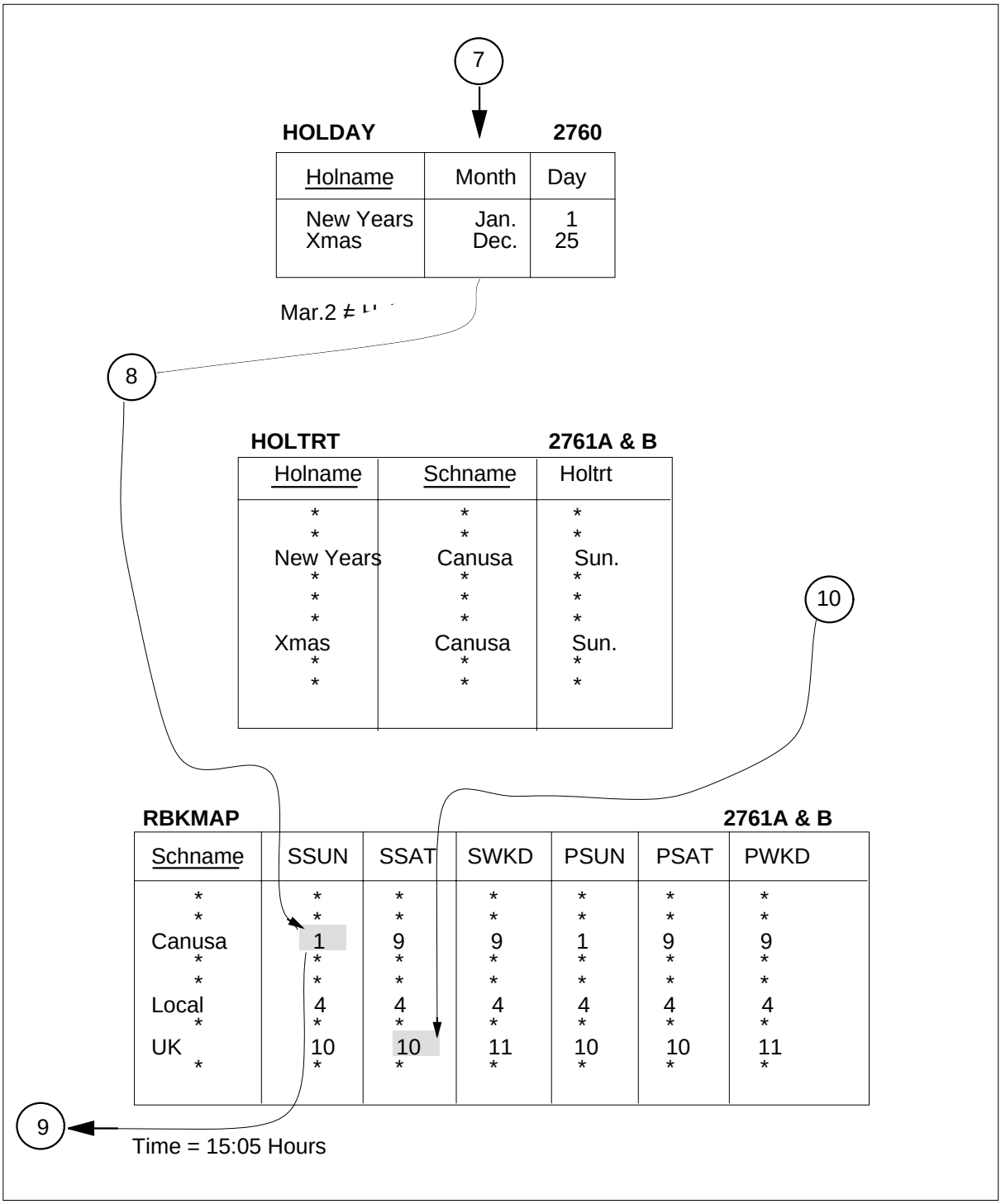

TOPS Call Processing Features (Rating) (continued)

Rating example - domestic toll call

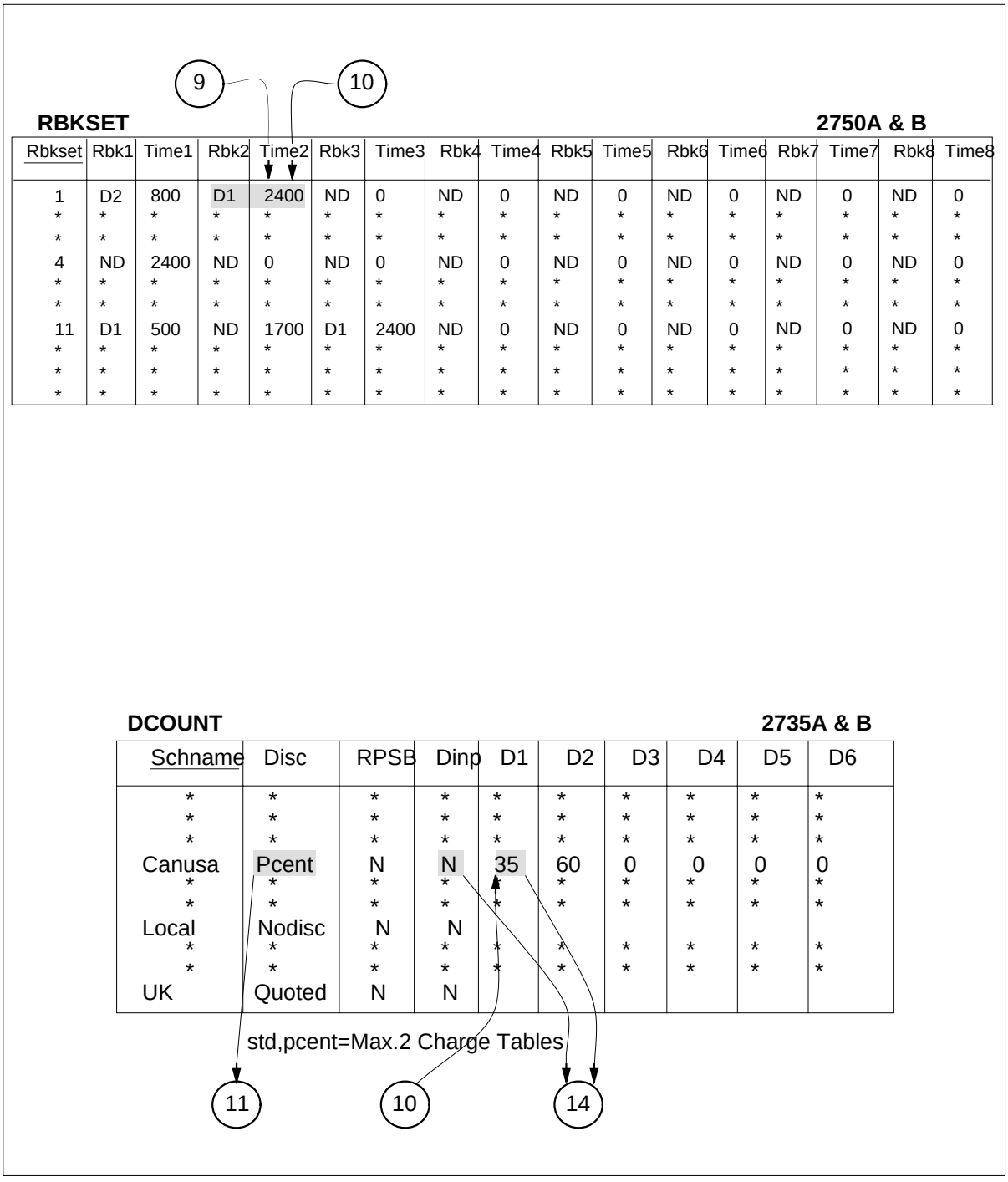

TOPS Call Processing Features (Rating) (continued)

Rating example - domestic toll call

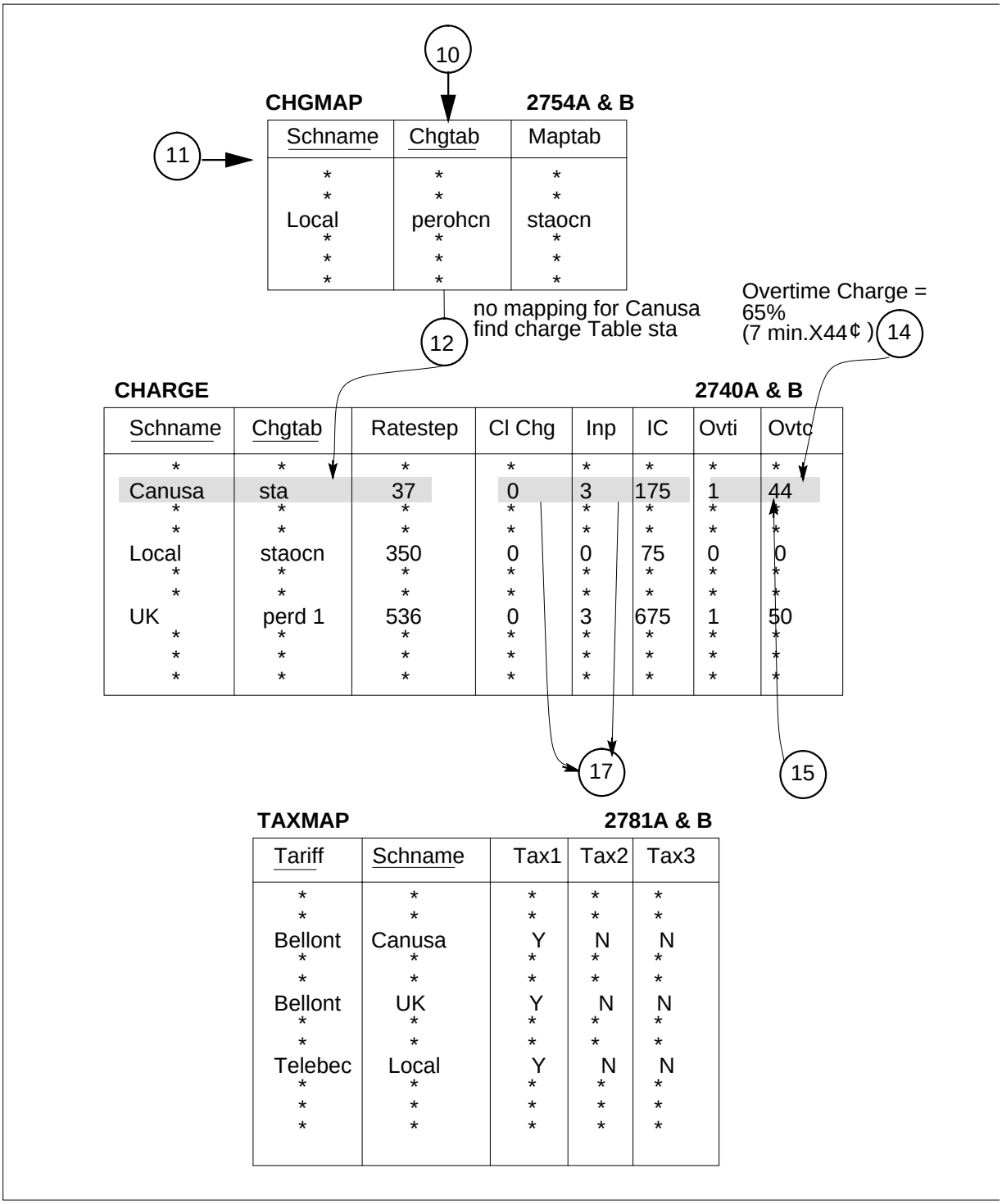

TOPS Call Processing Features (Rating) (continued)

Rating example - domestic toll call

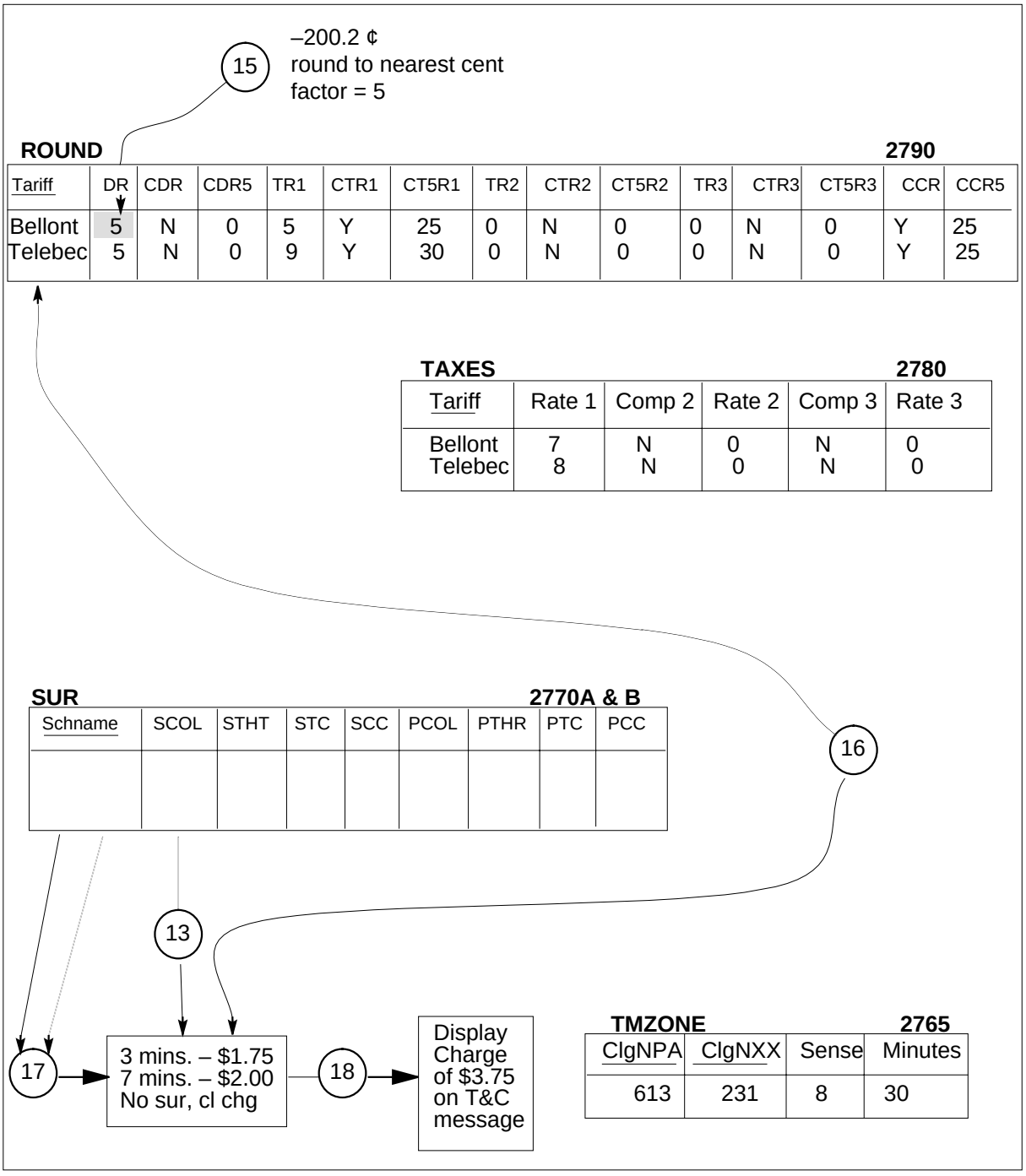

TOPS Call Processing Features (Rating) (continued)

For a local call

Steps 1 through 17 in the procedure on the following pages describe how the DMS/TOPS rating system calculates the rate for an automatically rated local. Use the flowchart in the following example in conjunction with the procedure and the following call details.

Calling #	819–525–1234
Called #	212–220–1234
Date	Sat. Mar. 01.80
Time	10:00 hours
Call type	0–
Station class	Coin
Class charge	Person
Billing type	Paid
Conversation time	18 minutes

The operating procedure for local calls for this Operating Company stipulates that the charge for local coin calls, which the subscriber refuses to complete himself, is the minimum toll charge. If the subscriber cannot dial the number because of equipment difficulties or other valid reasons, the charge is $0.10. There is no charge for local calls from hotel and non-coin stations.

For this example, the charge table for the minimum toll charge of $0.75 was assigned the name *staoacn* (station, operator-assisted, coin). A person-paid, operator-handled coin call uses the same rate. Therefore, instead of assigning another charge table, the call is simply mapped to the existing charge table, *staoacn*, to save software.

Call processing identifies this as a ratable, local call to the rating system. Details of the call are passed by way of the TRU. Rating takes place at the beginning of the call, since it is coin-paid.

Local call rating example: Follow this procedure in conjunction with the following flowchart and the example call details provided above:

1. The TARIFF table is indexed by calling NPA-NXX 819-525 (from TRU). The tariff Telebec is assigned to 819-525 as defined in the TARIFF table. This information is retained throughout the call.
2. The LCLRS table is indexed by tariff Telebec (CLGTRF table). The schedule name assigned to Telebec is LOCAL as defined in the SCHNUM table. This information is retained throughout the call. The local rate step is 350.
3. The SCHED table is indexed by schedule name Local. The schedule type = mlt (multi-tier). This information is reserved for use at step 7. Because the call is coin-paid (from TRU), the value of the coin recall period is sent

TOPS Call Processing Features (Rating) (continued)

to the call processing system to determine when the call should be brought back to the Operator Position and rated again.

Other data in the SCHED table is not required for rating this call.

4. The date (from TRU) is Mar. 1, 80. The date indexes the HOLDAY table that contains a list of the dates qualifying for holiday treatment. Mar. 1 is not a holiday; therefore, the HOLTRT table is bypassed.
5. The class charge is *person*, and the day of the week Mar. 1, 80, falls on is Saturday (from TRU). Using schedule name Local to index the RBKMAP table, a search is made for the rate break set applicable for a person, Saturday call. The Rbkset is 4. The date is no longer required for rating.
6. The RBKSET table is indexed by Rbkset 4. Since this call falls between 0000 and 2400 hours (origination time from TRU is 10:00 hours), discount = ND (No Discount). The time is no longer required for rating.
7. Schtype = mlt (SCHED table) and Disc = No disc (DCOUNT table indexed by schedule name Local) signify that there could be a maximum of ten Charge tables. Multi-tier Charge tables distinguish rates based on class charge, call type, and station class. The TRU tells the rating system that this call is person, coin (perohcn), and operator-handled (0-). The CHGMAP table is indexed by schedule name Local. Perohcn is mapped to the CHARGE table, staoacn.
8. The CHARGE table is indexed by schedule name Local, the Charge table (CHGMAP table), and the rate step (LCLRS table).
9. IP=0. The $0.75 charge, therefore, applies for an infinite period of time. Because the call is coin-paid (from TRU), the value of the IP is also sent to the call processing system. But IP=0 means that the call will not be recalled to the Operator Position. The station class, call type, and conversation time are no longer required for rating. Penny rounding, in field DR of the ROUND table, applies if calculated charges are not whole numbers.
10. Class charge is 0 (CHARGE table). Surcharge is 0 (SUR table indexed by schedule name Local). The class charge and billing are no longer required for rating.
11. The pre-tax charge is $0.75. The TAXMAP table is indexed by tariff Telebec and schedule name Local. Only one tax, Tax 1, applies on this call (provincial sales tax).
12. The TAXES table is indexed by tariff Telebec. The rate for Tax 1 is 8%.
13. A tax of 8% on $0.75 is equal to $0.06.
14. The ROUND table is indexed by tariff Telebec. CTR1=Y CT5R1=29 indicates that nickel rounding applies on Tax 1. Therefore, a calculated

tax of $0.021 rounds up to the nearest nickel, whereas the $0.06 tax is rounded down to $0.05.

The rounding factor is the amount that is added to the calculated charge before it is truncated to accomplish the desired rounding. (A tax of $0.06 rounds down to $0.05, and a tax of $0.07, $0.08, or $0.09 rounds up to $0.10.)

15. The pre-tax charge is added to the tax ($0.75 + $0.05 = $0.80).
16. CCR=Y CCR5=25 indicates that nickel rounding applies (pre-tax charge + tax) based on a factor of 25. Since $0.80 is already rounded to the nickel, this information is superfluous for this call.
17. The total, $0.80, is displayed on the Operator Position CRT at the beginning of the call.

TOPS Call Processing Features (Rating) (continued)

Rating example - local call

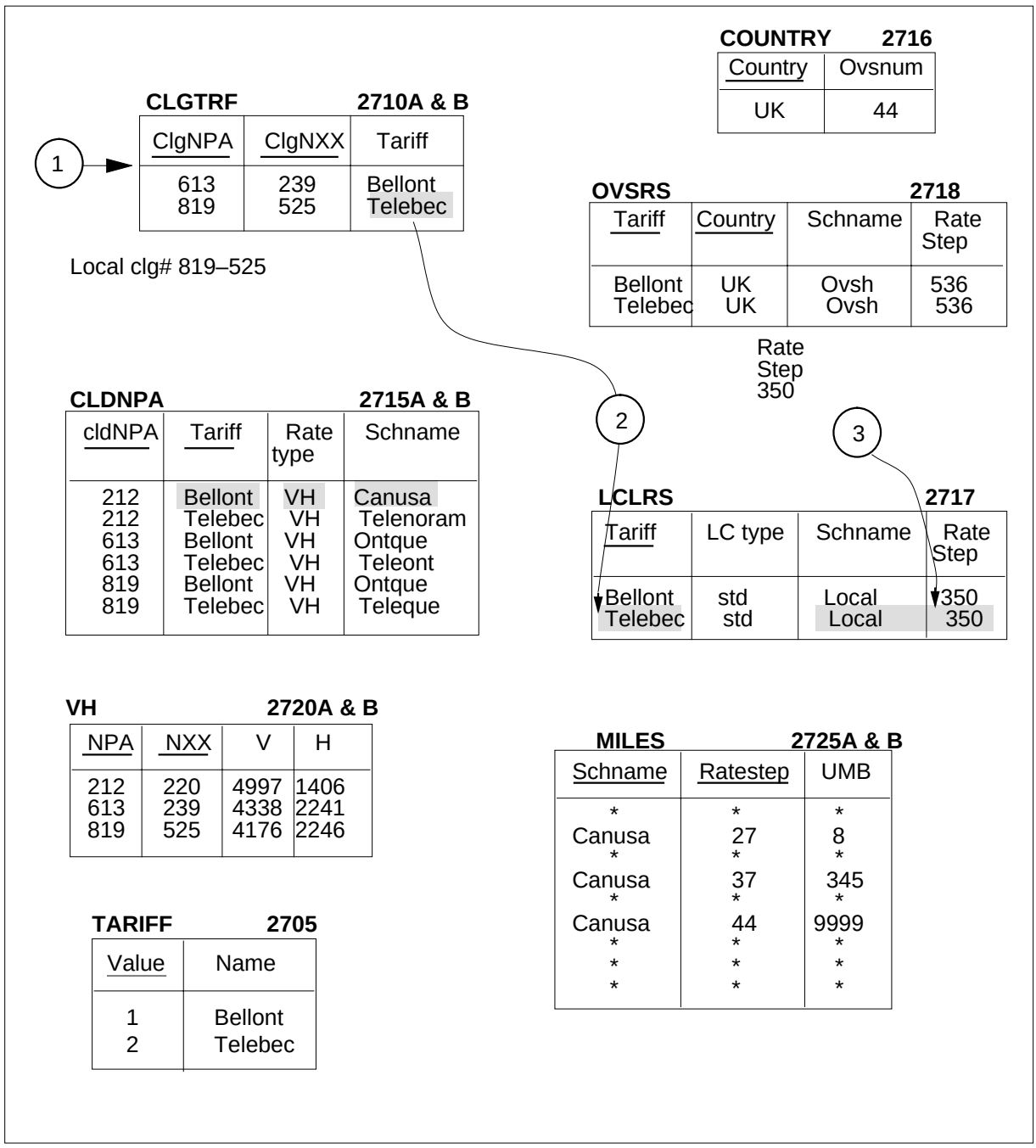

TOPS Call Processing Features (Rating) (continued)

Rating example - local call

SCHNUM 2700A & B

Value	Name
1	Ontque
2	Canusa
3	Teleque
4	Teleont
5	Telenoram
6	Local
7	UK

ORIGRC 2726

ClgNPA	ClgNXX	ORC
613	231	1
819	525	1

TERMRC 2727

NPA	NXX	TRC
809	294	1

PTP 2728

ORC	TRC	Schname	Ratestep
1	1	Cariba	341

SCHED 2730A & B

Schname	LRS	HRS	Termtype	Schtype	CIRP	CRP
*	*	*	*	*	*	*
*	*	*	*	*	*	*
Canusa	27	44	Dom	std	3	10
*	*	*	*	*	*	*
*	*	*	*	*	*	*
Local	350	350	Loc	mlt	0	0
*	*	*	*	*	*	*
*	*	*	*	*	*	*
UK	536	537	Ovs	std	1	5

HOLDAY 2760

Holname	Month	Day
New Years	Jan.	1
Xmas	Dec.	25

TOPS Call Processing Features (Rating) (continued)

Rating example - local call

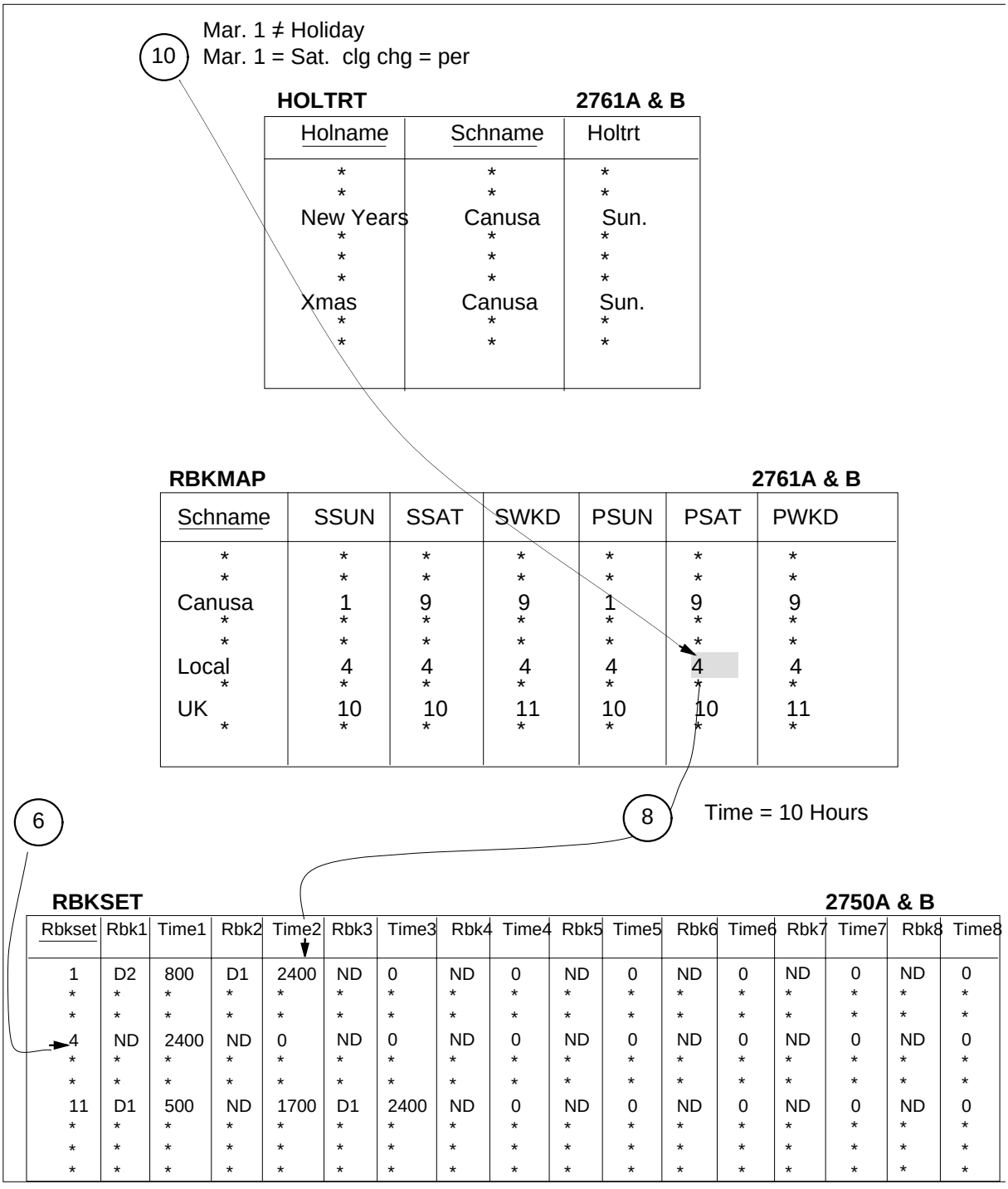

TOPS Call Processing Features (Rating) (continued)

Rating example - local call

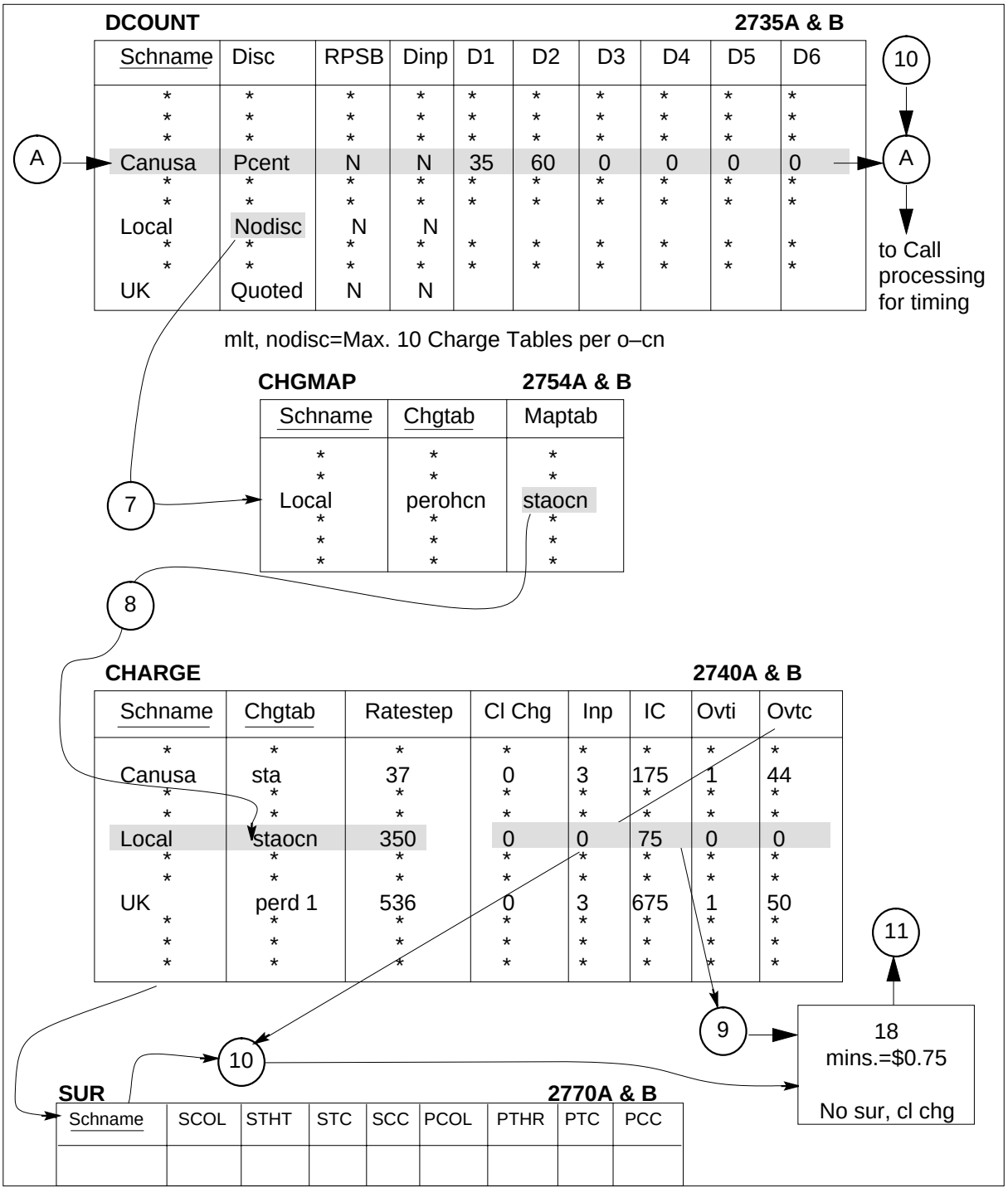

TOPS Call Processing Features (Rating) (continued)

Rating example - local call

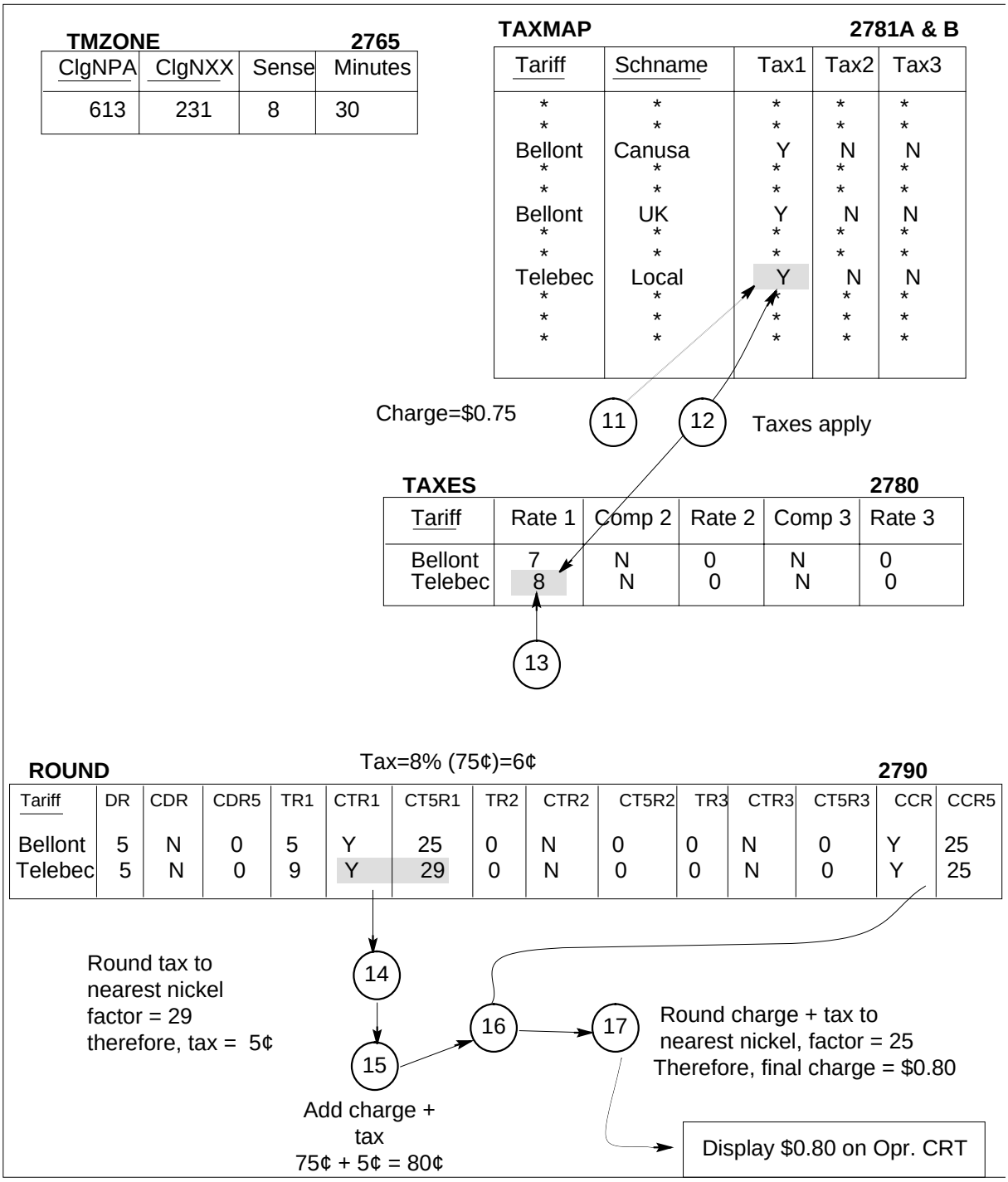

TOPS Call Processing Features (Rating) (continued)

For an overseas call

Steps 1 through 18 in the procedure on the following pages describe how the DMS/TOPS rating system calculates the rate for an automatically rated overseas call. Use the flowchart in the following figure in conjunction with the procedure and the following call details.

Calling #	441–234–5678
Called #	212–220–1234
Date	Wed. Jan.01.
Time	17:01 hours
Call type	01+
Station class	Hotel
Class charge	Person
Billing type	Paid
Conversation time	7 minutes

Call Processing identifies this as a rateable overseas call to the rating system with the country code 44. The details of the call are passed by way of the TRU. Since the station class is hotel, rating takes place at the end of the call. Charges and taxes are calculated separately.

Overseas call rating example: Follow this procedure in conjunction with the following flowchart and the example call details provided above:

1. The TARIFF table is indexed by calling NPA-NXX 613-239 (from TRU). Tariff Bellont is assigned to 613-239 as defined in the TARIFF table. This information is retained throughout the call.
2. Country code 44 is assigned in the COUNTRY table. The OVSRS table is indexed by tariff Bellont (CLGTRF table), and country *UK* is obtained from the COUNTRY table.
3. The schedule name assigned to Bellont is *UK*, which is defined in the SCHNUM table. This information is retained throughout the call. The overseas rate step is 536.
4. The SCHED table is indexed by schedule name *UK*. The schedule type is *std* (standard). This information is reserved for use at step 8. The other data in *SCHED* are not required for rating this call.
5. The date (from TRU) is Jan 1, 80. The date indexes the HOLDAY table that contains a list of the dates qualifying for holiday treatment. January 1 is a holiday that is assigned the name *Newyears*.
6. The HOLTRT table is indexed by the holiday name *Newyears* and schedule name *UK*. No holiday treatment is found for this tuple; therefore, holiday treatment does not apply, and the actual day that Jan. 1, 80, falls on is used for indexing the RBKMAP table.

TOPS Call Processing Features (Rating) (continued)

7. The class charge is *person*, and the day of the week for Jan. 1, 80 is Wednesday (from TRU). Using schedule name UK to index the RBKMAP table, a search is made for the rate break set applicable for a person weekday call. The Rbkset is *11*. The date is no longer required.
8. The RBKSET table is indexed by *Rbkset 11*. Since this call falls between 1700 and 2400 hours (origination time from TRU is 1701 hours), discount = D1. The time is no longer required for rating.
9. Schtype = std (SCHED table) and Disc = quoted (DCOUNT table) signify that there could be a maximum of six charge tables. Standard charge tables only distinguish rates based on class charge. Thus, the call type and station class (from the TRU) are not required in rating this call. The six charge tables are the *person* and *station* rates for the ND, D1, and D2 periods. The CHGMAP table is indexed by schedule name UK. No mapping is found; therefore, the maximum number of tables possible are in the CHARGE table.
10. The class charge of person (from TRU) and the discount table D1 (RBKSET table) are used along with the schedule name and rate step (OVSRS table) to index the CHARGE table.
11. 3 mins. = $6.75 (CHARGE table).
12. 4 mins. = $6.00 (CHARGE table, the overtime charge is 4 X $1.50).
13. No class charge (CHARGE table). No surcharge (SUR table indexed by schedule name UK). The class charge and billing are no longer required for rating.
14. The pre-tax charge is $12.75. The TAXMAP table is indexed by tariff Bellont and schedule name UK. Only one tax, Tax 1, applies on this call (provincial sales tax).
15. The TAXES table is indexed by tariff Bellont. The rate for Tax 1 is 7%.
16. 7% of $12.75 is equal to $0.8925.
17. The ROUND table is indexed by tariff Bellont. TR1 = 5 indicates that penny rounding applies on Tax 1 and that a factor of $0.005 is used in rounding.
18. To the tax of $0.8925, $0.005 is added, making a total of $0.8975 that is rounded down to $0.8901.

    The rounding factor is the amount that is added to the calculated charge before the charge is truncated to accomplish the desired rounding.
19. The pre-tax charge $12.75 is displayed separately from the tax, $0.89, on the hotel message.

TOPS Call Processing Features (Rating) (continued)

Rating example - overseas call

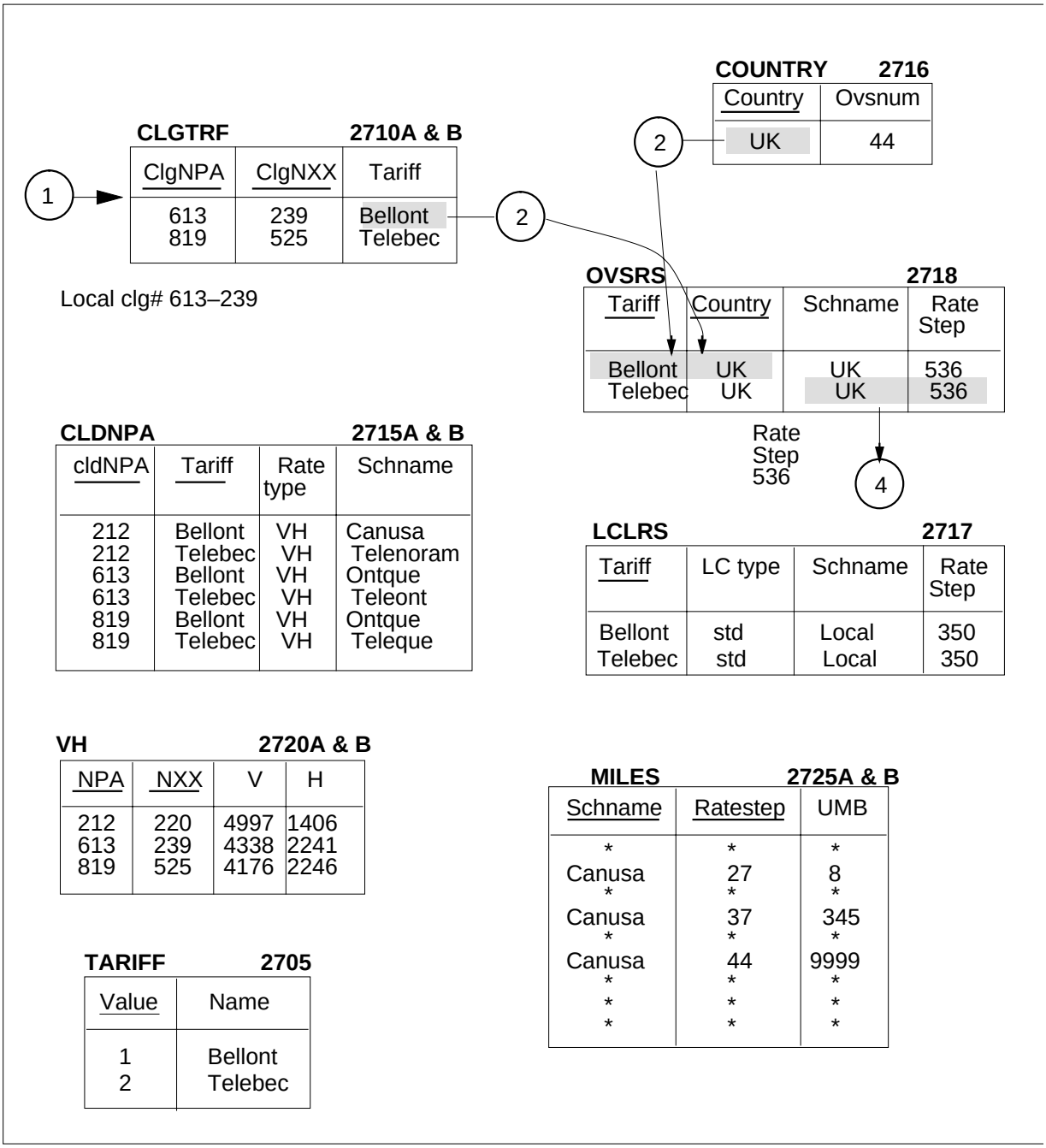

TOPS Call Processing Features (Rating) (continued)

Rating example - overseas call

SCHNUM 2700A & B

Value	Name
1	Ontque
2	Canusa
3	Teleque
4	Teleont
5	Telenoram
6	Local
7	UK

ORIGRC 2726

ClgNPA	ClgNXX	ORC
613	231	1
819	525	1

TERMRC 2727

NPA	NXX	TRC
809	294	1

PTP 2728

ORC	TRC	Schname	Ratestep
1	1	Cariba	341

SCHED 2730A & B

Schname	LRS	HRS	Termtype	Schtype	CIRP	CRP
*	*	*	*	*	*	*
*	*	*	*	*	*	*
Canusa	27	44	Dom	std	3	10
*	*	*	*	*	*	*
*	*	*	*	*	*	*
Local	350	350	Loc	mlt	0	0
*	*	*	*	*	*	*
*	*	*	*	*	*	*
UK	536	537	Ovs	std	1	5

4 Date = Jan. 1 5

TOPS Call Processing Features (Rating) (continued)

Rating example - overseas call

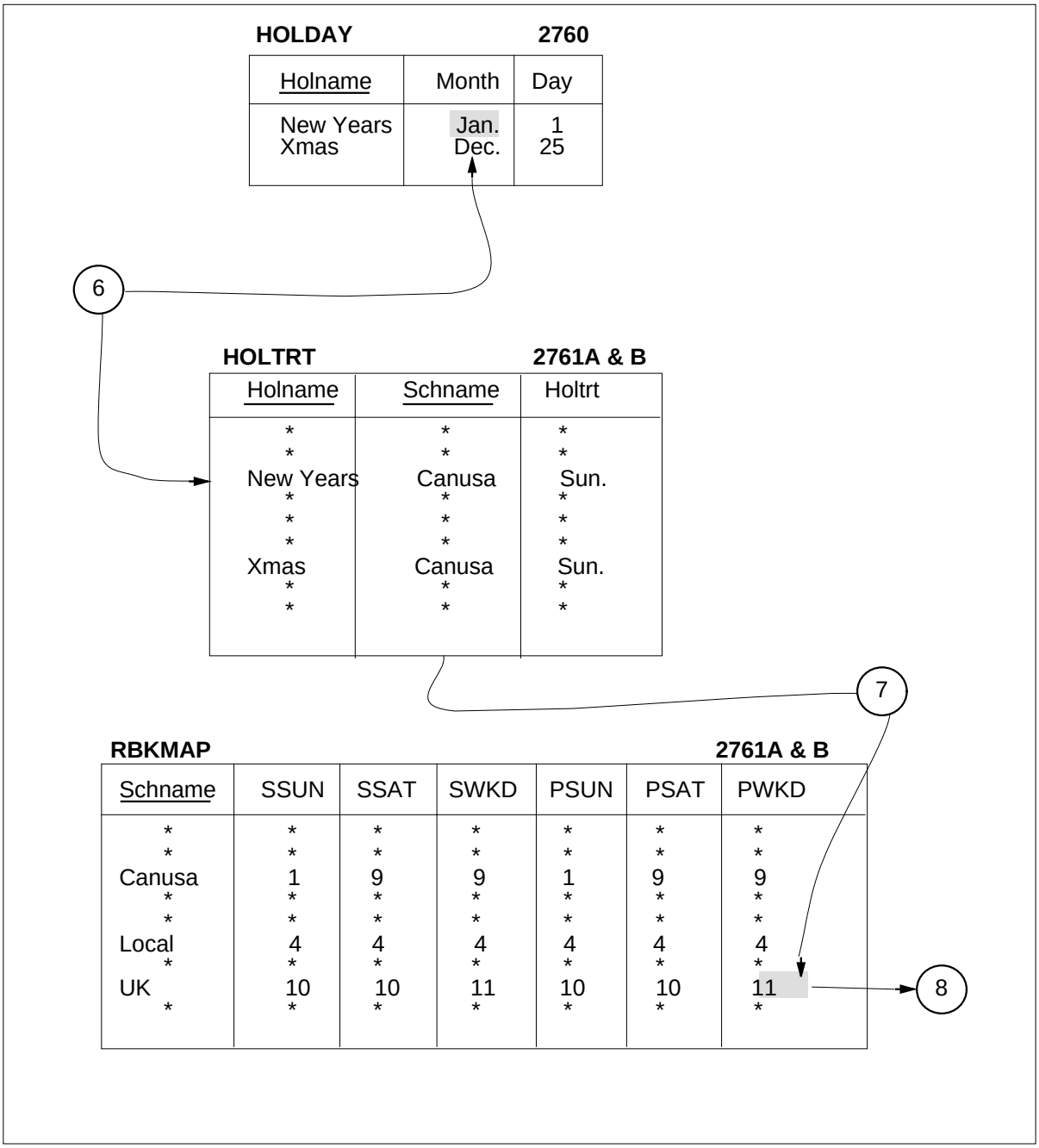

TOPS Call Processing Features (Rating) (continued)

Rating example - overseas call

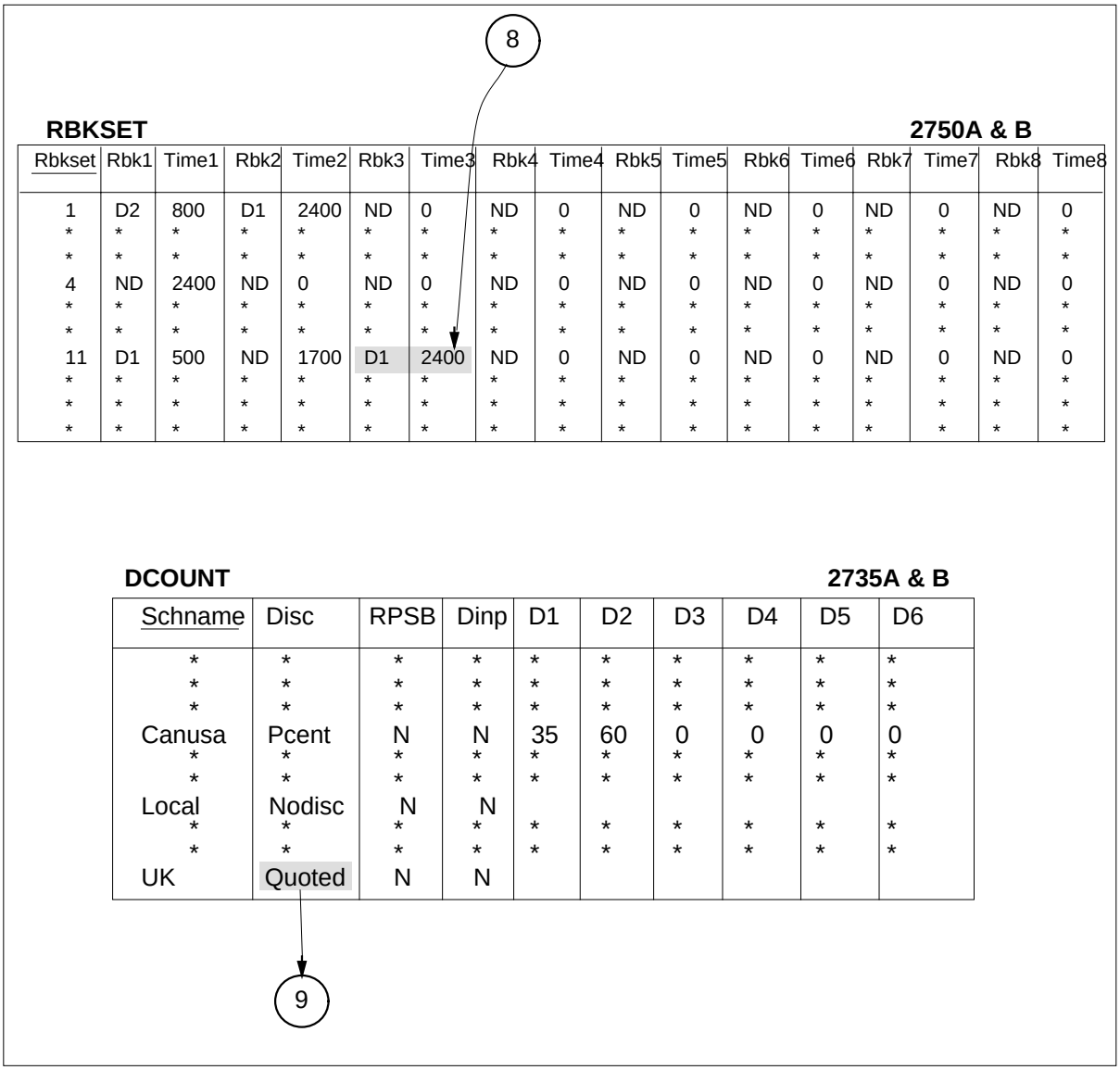

TOPS Call Processing Features (Rating) (continued)

Rating example - overseas call

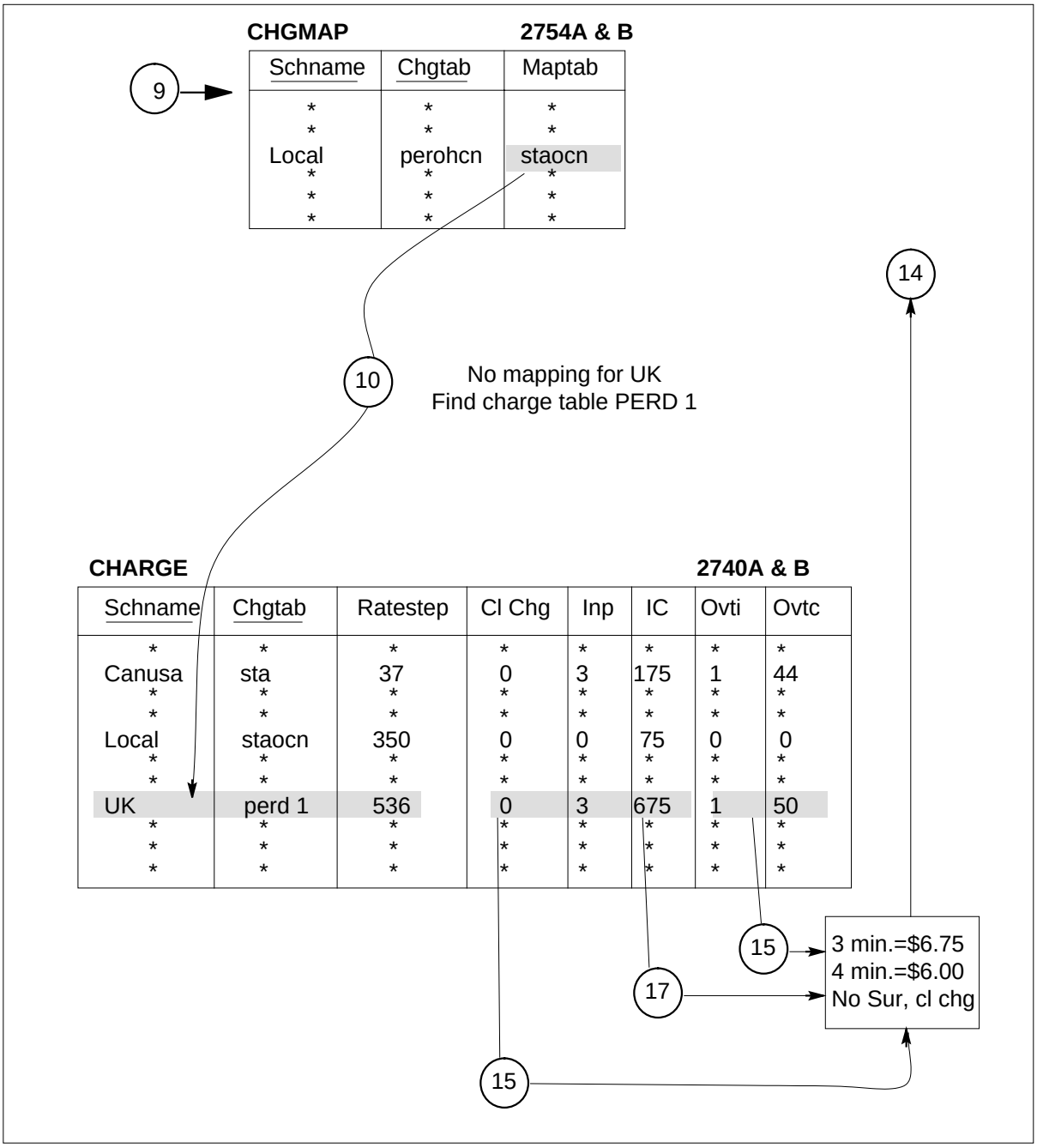

TOPS Call Processing Features (Rating) (continued)

Rating example - overseas call

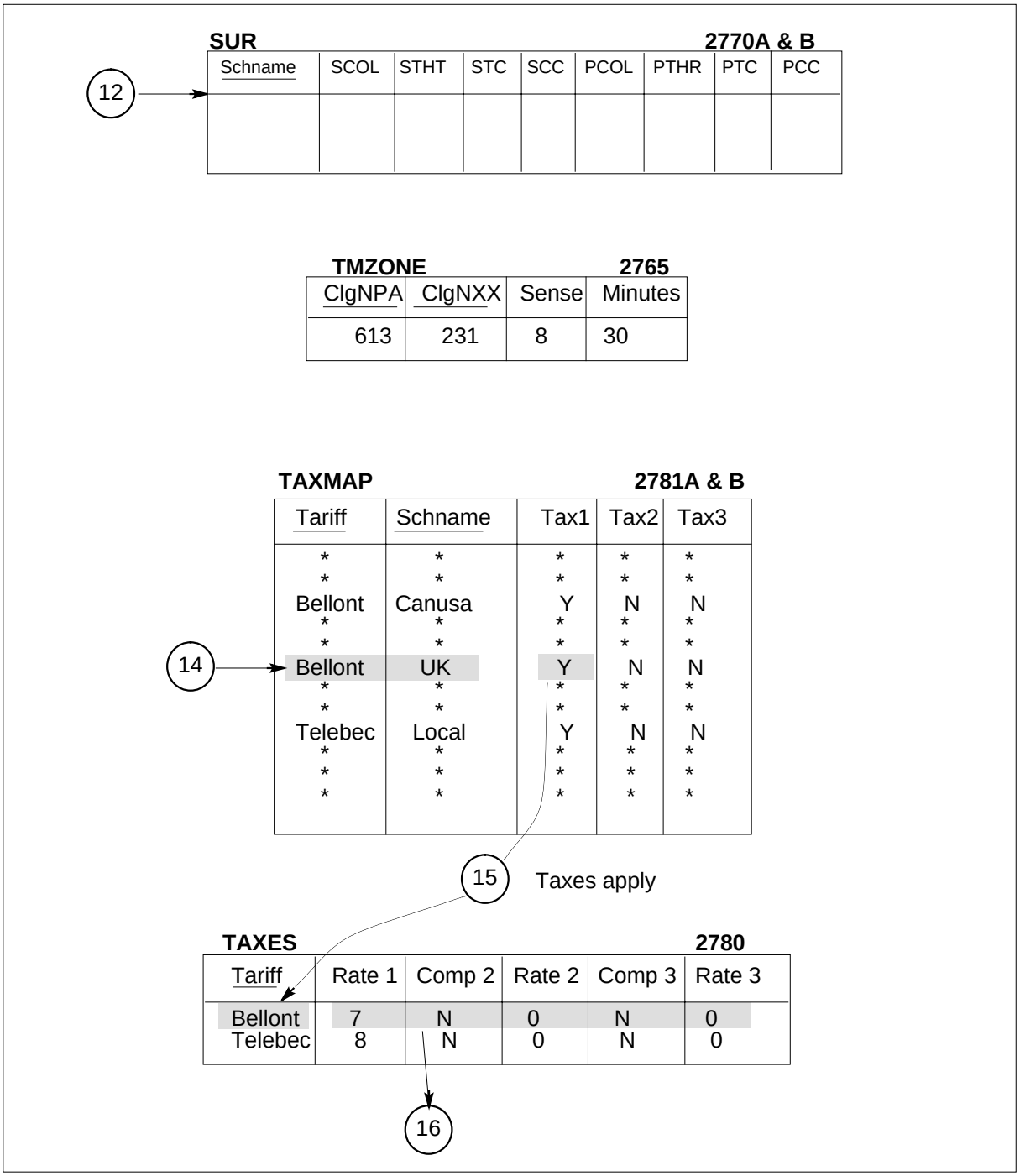

TOPS Call Processing Features (Rating) (continued)

Rating example - overseas call

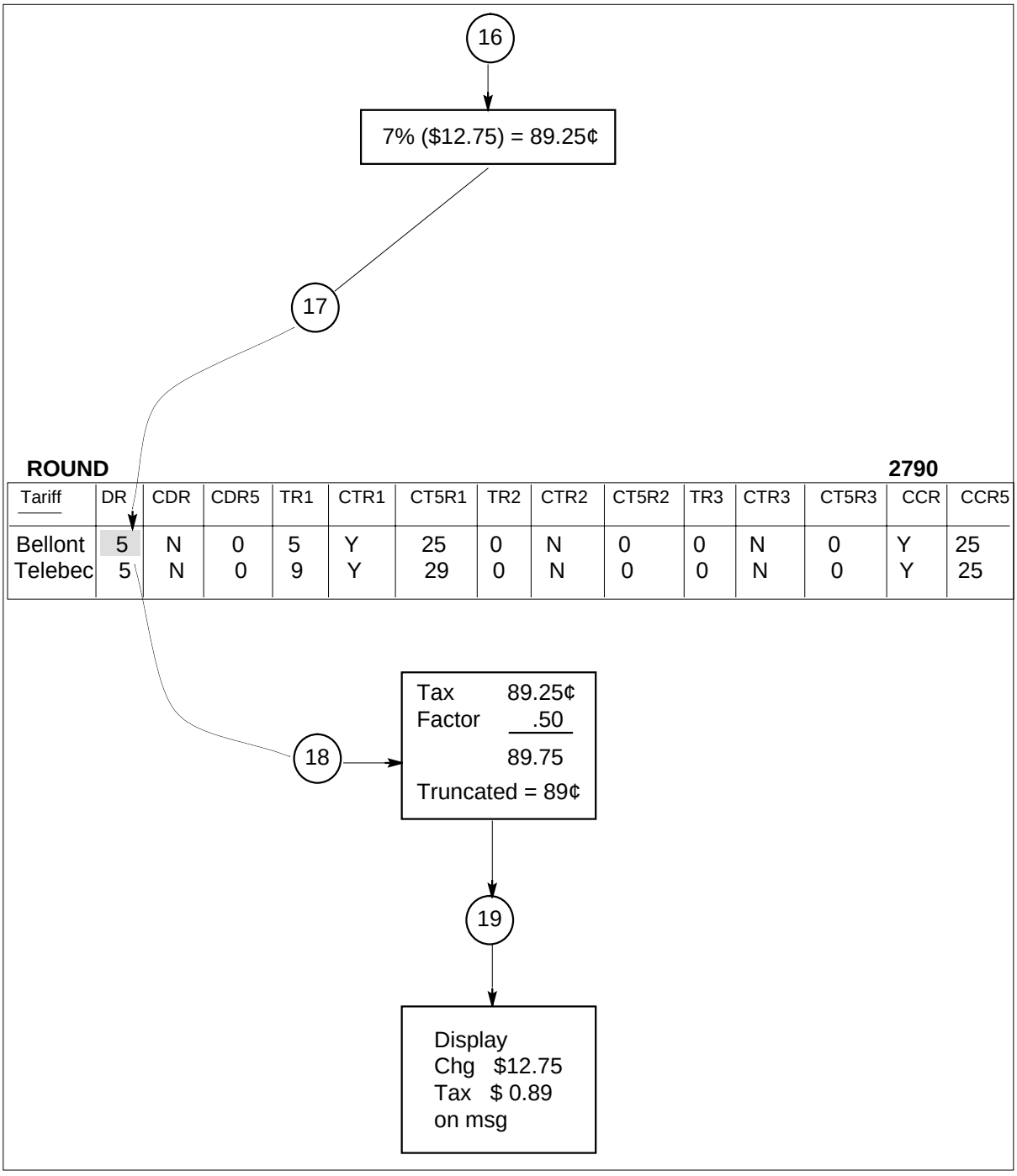

Tariff	DR	CDR	CDR5	TR1	CTR1	CT5R1	TR2	CTR2	CT5R2	TR3	CTR3	CT5R3	CCR	CCR5
Bellont	5	N	0	5	Y	25	0	N	0	0	N	0	Y	25
Telebec	5	N	0	9	Y	29	0	N	0	0	N	0	Y	25

TOPS Call Processing Features (Rating) (continued)

Translations table flow

The TOPS Call Processing Features (Rating) translations tables are described in the “Rating system datafill" figure of the previous Operation section. Within the Operation section, the figure follows the “Mass table control" section and is prior to the “Example rate calculations" section.

Limitations and restrictions

The following limitations and restrictions apply to TOPS Call Processing Features (Rating):

BR0737 - The decimal point in the Rate (RATE1, RATE2, RATE3) fields of the TAXES table is only to one place. Thus, to specify a rate of 7 percent, a Rate field should be set to 70, not 7. Setting to the field to 7 would cause the system to interpret the tax rate as 0.7 percent.

Sub-period billing

If the Sub-Period Billing Interval (SBPI) field is set to zero (0), sub-period billing is not applied and the calculation of charges is performed as it was prior to this feature.

If sub-period billing is used (SPBI is not set to 0), the Initial Period (INP) field and Subsequent Period (SBTI) fields must be entered in units which are multiples of the SPBI field. For example, if the SBPI field is set to 10 seconds, then the INP and SBTI fields must be set to multiples of 10 seconds, such as 20 seconds, 30 seconds, and so forth.

Interactions

The following paragraph describes the interactions between TOPS Call Processing Features (Rating) and other functionalities.

BR0737 works with all existing features where taxes are calculated.

Sub-period billing

Sub-period billing interacts with the calculation of charges for the TOPS Internal Rating System.

Sub-period billing does NOT interact with the TOPS External Rating system. TOPS External Rating is a real-time rating function that is unbundled from the TOPS switch and relocated to a separate computer system. Support for sub-period billing (that is, rating calculations in time increments other than those specified by the “initial" and “subsequent" period time intervals) would be performed at the off-board computer system, and thus are outside the TOPS processing arena.

In addition to the GRACE period, TOPS rating already has adjustments to the call length included for disconnect timing. This is a fixed time adjustment based upon the call type (for example, 2 seconds for toll calls, 1/2 second for MCCS and VSN calls, and so forth). The disconnect timing adjustment is controlled by office parameter DISC_TIME_BILLED in table OFCENG. If parameter DISC_TIME_BILLED is set to N, then the call length is decreased by the fixed amount before calculating charges. Note that if DISC_TIME_BILLED is set to N, the time in the AMA billing record is also adjusted. Also note that if DISC_TIME_BILLED is set to N and the new GRACE field is used, there could be adjustment to the call length being performed twice.

Activation/deactivation by the end user

TOPS Call Processing Features (Rating) requires no activation or deactivation by the end user.

Billing

TOPS shares the Automatic Message Accounting (AMA) billing system used by the DMS-200 tandem switch. The AMA record formats supported by TOPS are Bellcore (BC), Equal Access (EA), and Northern Telecom (NT).

- Bellcore/Equal Access Format
  - — structure codes - 00700 through 00734
  - — call codes - 006, 009, 010, 014, 015, 016, 017, 018, 019, 022, 023, 024, 027, 028, 029, 033, 035, 043, 044, 054, 055, 057, 058, 074, 107, 108, 250, 251
- Northern Telecom Format
  - — Direct Distance Dialing (DDD) records
  - — Direct Dial Overseas (DDO) records
  - — extension records (hotel, charge, charge adjust, and special billing)

Station Message Detail Recording

TOPS Call Processing Features (Rating) does not affect Station Message Detail Recording.

TOPS Call Processing Features (Rating) (continued)

Datafilling office parameters

The following table shows the office parameters used by TOPS Rating System. For more information about office parameters, refer to *Office Parameters Reference Manual*.

Office parameters used by TOPS Call Processing Features (Rating)

Table name	Parameter name	Explanation and action
OFCENG	TOPS_MAX_ORIG_RATE_CENTER and TOPS_MAX_TERM_RATE_ CENTER	The number of tuples in the PTP table are dynamically allocated by the system for every called NPA with a rate type of PTP, using the product of the values of these two parameters. The product of these two parameters must not exceed 32,767 (BCS27).

Datafill sequence

The following table lists the tables that require datafill to implement TOPS Call Processing Features (Rating). The tables are listed in the order in which they are to be datafilled.

Datafill tables required for TOPS Call Processing Features (Rating)

Table	Purpose of table
CCTR	Country Code.
TARIFF	TOPS List of Tariff Names.
CLGTRF	TOPS Calling NPA-NXX to Tariff.
SCHNUM	TOPS List of Rate Schedule Names.
SCHED	TOPS Rate Schedule.
SERVNAME	TOPS Service Rating Name.
SERVSCRN	TOPS Service Screen.
SRVRS	TOPS Service Rating.
MILES	TOPS Mileage.
LCLRS	TOPS Calling Tariff to Local Rate Step.
COUNTRY	TOPS Overseas Number to Country Name Mapping.
OVSCC	TOPS Overseas Credit Card.

TOPS Call Processing Features (Rating) (continued)

Datafill tables required for TOPS Call Processing Features (Rating)

Table	Purpose of table
OVSBILL	TOPS Overseas Billing Restrictions.
OVSRS	TOPS Overseas Rate Step.
VH	TOPS Vertical and Horizontal Coordinates.
CLDNPA	TOPS Called NPA and Calling Tariff to Rate Type.
CLDNPAEX	TOPS Called NPA-NXX and Calling Tariff to Rate Type.
HOLDAY	TOPS Holiday.
HOLTRT	TOPS Holiday Treatment.
DCOUNT	TOPS Discounts.
RBKSET	TOPS Rate Break Set.
RBKMAP	TOPS Rate Break Map.
ORIGRC	TOPS Point to Point Rating Originating Rate Centers.
TERMRC	TOPS Point to Point Rating Terminating Rate Centers.
PTP	TOPS Point to Point Rating.
CHARGE	TOPS Charge.
CHGMAP	TOPS Schedule Charge Mapping.
MINCHG	TOPS Minimum Charge.
SUR	TOPS Surcharge.
TAXES	TOPS Taxes.
TAXMAP	TOPS Schedule-Taxes Mapping.
ROUND	TOPS Charge Rounding.
TMZONE	TOPS Time Zone Variation.
CITYNUM	TOPS City Number.
CITYZONE	TOPS City Zone.

TOPS Call Processing Features (Rating) (continued)

Datafill tables required for TOPS Call Processing Features (Rating)

Table	Purpose of table
CITYMAP	TOPS City Map.
FXDNMAP	Foreign Exchange Directory Number Map.

Datafilling table SCHNUM

This datafill will control further table datafill of all schedule names. The schedule names listed here must be consistent in the following tables

- SCHED
- CLDNPA
- CLDNPAEX
- LCLRS
- MILES
- PTP
- SUR
- CHARGE
- CHGMAP
- DCOUNT
- RBKMAP
- HOLTRT
- TAXMAP
- SRVRS (TOPS Service Billing, OSB00101)

In a normal BOC TOPS environment where inter-LATA calls are not rated (not TICS), there are usually only two applicable schedules: Intra-LATA and Local. LATAs that cross state/NPA boundaries will have more. Intra-LATA rates calls within the DMS LATA boundaries and Local rates local 0+/- calls.

A “zero domestic" (ZERODOM) schedule and associated rate step may be established if there is a requirement to provide an AMA timing entry for manually rated calls. The automatic rating system in this case does not provide any charge calculation but does provide the function of timing the call by indicating the initial period and coin recall period.

Datafilling table TARIFF

Provide consistent tariff names in the following rating tables:

- CLGTRF
- TAXES
- TAXMAP
- ROUND
- CLDNPA
- CLDNPAEX
- LCLRS

This table should have no more entries than LATAs or NPAs that the switch serves. There is normally one tariff; two in very complicated arrangements unless the tariff is interpreted to mean otherwise (i.e., multiple local schedules).

TARIFF names cannot be deleted.

Datafilling table CLGTRF

Ensure that all NXXs that can access TOPS are datafilled with their correct tariff name. The total number of NXXs datafill in this table should equal the total number of unique NXXs datafilled in table TOPSBC.

This is used if the Class Charge indicates that the calling party is paying.

Datafilling table CLDNPA

The Called NPA and Calling Tariff to Rate Type (CLDNPA) table is used to define the automatic rating method used for calls between a specified calling tariff and a called NPA combination.

All NPAs that are to be rated by TOPS must be datafilled. In a BOC TOPS environment there will usually be no more than 1-4 unless the switch covers a large, heavily populated area.

Ensure that a correct rating type (PTP, VH, CZ, SRA, EXT) has been datafilled for every NPA and that the appropriate tables associated with that rating type have been datafilled to calculate the rate step.

- PTP - Tables ORIGRC, TERMRC, PTP
- VH - Tables VH, MILES
- CZ - Tables CITYMAP, CITYNUM, CITYZONE, VH, MILES

TOPS Call Processing Features (Rating) (continued)

- SRA - No extra tables required
- EXT - Table CLDNPAEX

Datafill example for table CLDNPA

The following example shows sample datafill for table CLDNPA.

MAP display example for table CLDNPA

```
NPATRF                          OVERLAY
_____________________________________________________________
212  BELLONT  VH       CANUSA
212  BELLQUE  VH       CANUSA
212  TELEBEC  VH    TELENORAM
301  BELLONT  VH       CANUSA
301  BELLQUE  VH       CANUS
301  TELEBEC  VH    TELENORAM
416  BELLONT  VH       ONTQUE
416  BELLQUE  VH       ONTQUE
416  TELEBEC  VH      TELEONT
418  BELLONT  VH       ONTQUE
418  BELLQUE  VH       ONTQUE
418  TELEBEC  VH      TELEQUE
604  BELLONT  VH         TCTS
604  BELLQUE  VH          TCTS
604  TELEBEC  VH    TELENORAM
613  BELLONT  VH       ONTQUE
613  BELLQUE  VH       ONTQUE
613  TELEBEC  VH      TELEONT
717  BELLONT  VH       CANUSA
717  BELLQUE  VH       CANUSA
717  TELEBEC  VH    TELENORAM
819  BELLONT  VH       ONTQUE
819  BELLQUE  VH       ONTQUE
819  TELEBEC  VH      TELEQUE
```

Datafilling table CLDNPAEX

Datafill only when table CLDNPA entries (NPAs) have been datafilled with rating type EXT. This table is used when calls within the LATA must be rated based upon the NXX dialed instead of only the NPA.

If a particular NXX is not found in this table, then TOPS rating software reverts to table CLDNPA and uses the appropriate NPA schedule and VH rating.

Never add NPA NXX to CLDNPAEX unless NPA is marked EXT in table CLDNPA.

Datafilling table LCLRS

This table should be datafilled with only one local schedule/rate step unless the DMS serves areas with more than one local charge (i.e., 20c and 25c).

If two local charges are required, then SPL must be datafilled in field LC_TYPE for the unique charge/rate step. Each coin station requiring this charging must be datafilled in table SPLDNID with field SELECTOR set to COIN.

Datafilling table MILES

The Miles (MILES) table is used in domestic rating where V and H rating applies to the NPA. This table associates a rate step with each mileage band of a rate schedule.

The Automatic Rating System uses vertical and horizontal coordinates to determine the mileage band within which a call falls. The MILES table uses this information to determine the rate step to be used for charge calculation.

Additional notes:

- Used when rate type in table CLDNPA/CLDNPAEX is datafilled as VH. Inspect data for logical mileage bands.
- There can be NO GAPS in the rate steps datafilled per schedule in this table.
- Ensure that for each schedule/rate step combination datafilled in table MILES there is a corresponding set of entries in table CHARGE.
- Ensure that the least and greatest table MILES rate steps are datafilled in table SCHED as the LRS (lowest rate step) and HRS (highest rate step) respectively for each schedule.

Datafill example for table MILES

The following example shows sample datafill for table MILES.

TOPS Call Processing Features (Rating) (continued)

MAP display example for table MILES

```
SCHRS          UMB
_____________________
TELEQUE      212 250
TELEONT      220 9
TELENORAM    244 25
TELENORAM    245 35
TELENORAM    246 4
TELENORAM    247 60
TELENORAM    248 80
TELENORAM    249 100
TELENORAM    250 130
TELENORAM    251 170
TELENORAM    252 210
TELENORAM    253 250
TELENORAM    254 300
```

Datafilling table VH and worksheet

The Vertical and Horizontal Coordinates (VH) table lists the vertical and horizontal coordinates for all NPA-NXX that should be rated automatically.

For the worksheet:

- The worksheet must be submitted for all TOPS offices doing CZ, PTP, and/or VH rating.
- List each NPA that the TOPS will rate. Also list each “exception" NXX within those NPAs that the TOPS will not be required to rate (if applicable).
- Some entries on E2720 VH may not datafill, but are not errors.

Datafill example for table VH

The following example shows sample datafill for table VH>.

MAP display example for table VH

```
NPANXX   V     H
_____________________________________________________________________
212 220 4997 1406
301 244 5510 1575
416 599 4981 2488
418 358 2419 2312
604 652 6127 9065
613 239 4338 2241
613 544 4619 2187
613 623 4394 2324
613 777 4338 2241
717 427 5141 1677
819 522 4203 2203
819 525 4176 2246
819 538 3854 2041
819 777 4338 2241
613 621 4338 2241
```

Datafilling tables CITYNUM, CITYMAP, and CITYZONE

Datafill these tables when city zone (CZ) rating has been specified as a rate type in table(s) CLDNPA/CLDNPAEX.

Due to design intent, only the called number's VH coordinates will be replaced using this rate type and only when the mileage in field RATEDIST has been exceeded for the call.

Datafilling tables ORIGRC, TERMRC, and PTP

Datafill these tables when point-to-point rating (PTP) has been datafilled as a rate type in tables CLDNPA/CLDNPAEX.

These tables are used principally when Operating Company rating requirements cannot be handled using VH or CZ rating. Uses excessive memory compared with other rating methods.

Office parameters TOPS_MAX_ORIG_RATE_CENTER and TOPS_MAX_TERM_RATE_ CENTER govern the size of tables ORIGRC and TERMRC respectively (CHKTOPS). The product these two parameters must not exceed 32,767 (BCS27). The number of entries allowed in table PTP is this product.

TOPS Call Processing Features (Rating) (continued)

When the first tuple is datafilled, allocation is set for the table. To increase table size after this:

- Delete all entries
- Increase parameters
- Re-datafill table

Table ORIGRC divides a serving area, where PTP rating applies, into originating rate centers by specifying the following for each NPA NXX combination within that area:

- calling NPA
- calling NXX
- PTP originating rate center number.

Datafill example for table ORIGRC

The following example shows sample datafill for table ORIGRC.

MAP display example for table ORIGRC

```
NPANXX    ORC
_____________________________________________________________________
613   231   1
613   239   1
819   525   1
819   777   1
```

Table TERMRC divides a called area, where PTP rating applies, into terminating rate centers by specifying the following for each NPA NXX combination within that area:

- called NPA
- called NXX
- PTP terminating rate center number.

Datafill example for table TERMRC

The following example shows sample datafill for table TERMRC.

MAP display example for table TERMRC

```
NPANXX      TRC
_____________________________________________________________________
809  294    1
809  335    2
809  975    3
```

Table PTP lists the schedule name and rate step that apply to each combination of PTP originating and terminating rate center.

Datafill example for table PTP

The following example shows sample datafill for table PTP.

MAP display example for table PTP

```
ORCTRC   SCHNAME   RATESTEP
_____________________________________________________________________
1  1     CARIBA     341
1  2     BAHAMAS    344
1  3     CARIBA     340
```

Datafilling table SCHED

Ensure that LRS and HRS correspond exactly to the datafill in table CHARGE for each schedule. NO EXTRA can be built into table SCHED for future use, unless they are carried throughout the other rating tables.

Ensure that LRS and HRS correspond exactly with the rate steps datafilled in tables MILES, LCLRS, PTP, CLDNPA, and CLDNPAEX (if SRA rate type).

The SCHTYPE (schedule type) datafilled must agree with table CHARGE datafill for each schedule.

Field TERMTYPE (termination type) should logically match the schedule name (i.e., LOCAL schedule name should be datafilled as TERMTYPE “LOC").

Field CIRP defines the duration of the coin initial recall period. The value in this field should be equal to or greater than the value in the INP field of table CHARGE. Refer to BR0373 (Rate Period Specific Billing) in the description section. If the value in the CIRP field is 0, a subscriber placing a call from a coin station will not be returned to the operator until the end of the call and only if a charge is owed.

TOPS Call Processing Features (Rating) (continued)

Datafill example for table SCHED

The following example shows sample datafill for table SCHED.

MAP display example for table SCHED

```
SCHNAME       LRS  HRS TERMTYPE SCHTYPE CIRP CRP
_____________________________________________________
ONTQUE          1   17   DOM       STD    1    2
CANUSA         27   44   DOM       STD    1    2
TCTS           54   71   DOM       STD    3   10
LOCAL         349  350   LOC       MLT    0    0
ZERODOM         0    0   DOM       STD    3   10
CALLTYPETIER 400  400   DOM        CTT    3   10
ZEROOVS       500  500   OVS       STD    3    5
CARIBA        340  341   DOM       STD    3    5
BAHAMAS       344  344   DOM       STD    3    5
OVSA          501  503   OVS       STD    3    5
STACLASSTIER 650  650   DOM        SCT    3   10
OVSH          536   37   OVS       STD    3    5
TELEQUE       201  217   DOM       STD    3   10
MULTITIER     998   98   DOM       MLT    3   10
TELEONT       220  239   DOM       STD    3    0
TELENORAM     242  264   DOM       STD    3   10
HAWAII        331  331   DOM       STD    3    5
USAUSA        100  109   DOM       STD    3   10
SERVICE       351  355   SRV       STD    0    0
```

Datafilling table CHARGE

The Charge (CHARGE) table lists the various types of charges for each rate step associated with the charge tables for each rate schedule. This table must be datafilled before the Schedule Charge Mapping table (CHGMAP).

For each schedule and schedule type (CTT, STD, SCT, or MLT) datafilled in table SCHED, the correct and complete set of charge table name data must be present in table CHARGE for each rate step.

All rate steps and the associated data must be defined with NO GAPS or OVERLAPS.

For release TOPS09, fields SBTI and GRACE are new.

Datafilling table CHARGE

The following table shows the datafill specific to TOPS Call Processing Features (Rating) for table CHARGE. Only those fields that apply directly to

TOPS Call Processing Features (Rating) (continued)

TOPS Call Processing Features (Rating) are shown. For a description of the other fields, refer to the data schema section of this document.

Datafilling table CHARGE

Field	Subfield or refinement	Entry	Explanation and action
	SPBI	0 to 255	Sub-period billing interval. This new field is valid for non-coin calls only and indicates the sub-period billing interval in seconds for calculating rate charges. The default is 0. This field provides subdivision intervals for the INP and SBTI intervals. This allows more accurate billing since a call is charged for whole intervals, regardless of when the call ends. Therefore, a small SPBI means a shorter unused portion. If the call ends during INP, the rate is the time fraction of IC. If the call ends during SBTI, the rate is the time fraction of SBTC. If a call ends during SPBI, the whole peiod is counted. If SPBI is set to zero, SPBI has no affect as prior to SPBI. SPBI is not affected by field TIMEUNIT. The values in fields INP and SBTI must be integer multiples of field SPBI. For example, if TIMEUNIT = MIN and SPBI = 8 (seconds), INP and SBTI must be set to 2, or 4, or 6, and so forth (minutes).
	INP	0 to 15	Initial period. This existing field indicates the initial period in minutes. The default is 0. An entry of 0 indicates an infinite initial period. If field SPBI is not set to zero, field SPBI must divide evenly (no fractions) into field INP. SBTI is multiplied by 60 before SBTI is divided by SPBI.

TOPS Call Processing Features (Rating) (continued)

Datafilling table CHARGE

Field	Subfield or refinement	Entry	Explanation and action
OVTI		0 to 15	Overtime period. This existing field indicates the subsequent period in minutes. The default is 0. Calls extending beyond the initial period are charged the amount specified in field OVTC for each subsequent period. If field SPBI is not set to zero, field SPBI must divide evenly (no fractions) into field OVTI. SBTI is multiplied by 60 before SBTI is divided by SPBI.
GRACE		0 to 255	Grace. This field indicates the number of seconds to be deducted from the time used for calculating the rating charge. The default is 0. If the call duration is less than or equal to the GRACE value, then the call duration is set to 0. If the call duration is 0, there is no charge for the call.

Datafill example for table CHARGE

The following example shows sample datafill for table CHARGE.

MAP display example for table CHARGE

```
CHGKEY                   CLCHG  SPBI  INP  IC    OVTI  OVTC    GRACE
-------------------------------------------------------------------
ONTQUE   PER 1            0      0     3    220   1     8       0
CANUSA   PER 27           0      0     3    10    1     7       0
TCTS  STA 54              0      0     3    85    1     10      0
LOCAL STAOACN 350         0      0     0    75    0     0       0
ZERODOM  STA  0           0      0     3    0     0     0       0
CALLTYPETIER PEROAND 400 40     0     7    245   2     20      0
ZEROOVS     STA 500       0      0     3    0     0     0       0
CARIBA     PER 340        0      0     3    900   1     225     0
BAHAMAS   STAD2 344       0      0     3    390   1     130     0
HAWAII    PER 331         0      0     105   0    1     160     0
OVSA     STA 503          0      0     3    900   1     300     0
STACLASSTIER  STANC 650   0      0     15   280   2     10      0
OVSH   STAD1 537          0      0     3    555   1     185     0
TELEQUE   PER 201         0      0     3    220   1     12      0
MULTITIER PEROANC 998     0      0     7    330   2     10      0
TELEONT   PER 230         0      0     3    425   1     53      0
TELENORAM   PER 248       0      0     3    370   1     43      0
SERVICE     PER 351       0      0     0    60    0     0       0
```

Error messages

The following error messages apply to table CHARGE.

Error messages for table CHARGE

Error message	Explanation and action
SPBI VALUE MUST EVENLY DIVIDE INTO INP	This error message is displayed if an attempt is made to datafill field INP with a value such that field SPBI does not divide evenly into field INP.
SPBI VALUE MUST EVENLY DIVIDE INTO OVTI	This error message is displayed if an attempt is made to datafill field OVTI with a value such that field SPBI does not divide evenly into field OVTI.

Datafilling table CHGMAP

The Schedule Charge Mapping (CHGMAP) table is used to map all the charge tables for a rate schedule that share the same charge data. One of these tables

TOPS Call Processing Features (Rating) (continued)

is used in the CHARGE table; the rest are mapped against this table in the CHGMAP table.

Note 1: Ensure that valid mapping is done to existing charge table names in table CHARGE.

Note 2: Every combination of SCHNAME and RATESTEP must appear in table CHARGE for a particular CHGTAB before the associated charge tables can be entered in table CHGMAP.

Table SCHED

The following figure shows the MAP display for table SCHED

MAP display example for table SCHED

```
SCHNAME      LRS    HRS    ...    SCHTYPE
_____________________________________________________
INTRALATA     10     15    ...       MLT
```

Table CHGMAP

The following figure shows the MAP display for table SCHED

MAP display example for table CHGMAP

```
SCHNAME     CHGTAB     MAPTAB
_____________________________________________
INTRALATA   STADDCN    STAOACN
```

Table CHARGE

The following figure shows the MAP display for table SCHED

MAP display example for table CHARGE

```
SCHNAME        CHGTAB     RATESTEP
_____________________________________________
INTRALATA      STAOACN      10
INTRALATA      STAOACN      11
INTRALATA      STAOACN      12
INTRALATA      STAOACN      13
INTRALATA      STAOACN      14
INTRALATA      STAOACN      15
```

Since all rate steps 10 through 15 have been entered in table CHARGE for INTRALATA STAOACN, STADDCN can be mapped to it in table CHGMAP.

The following exhibit shows an an additional example of how this table can be set up.

Datafill example for table CHGMAP

The following example shows sample datafill for table CHGMAP.

MAP display example for table CHGMAP

```
SCHTBL    MAPTAB
_____________________________________________________________________
LOCAL PEROACN STAOACN
LOCAL PEROHCN STAOACN
LOCAL STAOHCN STAOACN
LOCAL PEROANC STADDNC
LOCAL PEROHNC STADDNC
LOCAL STAOANC STADDNC
LOCAL STAOHNC STADDNC
ZERODOM PER STA
ZEROOVS PER STA
```

Datafilling table DCOUNT

The Discount (DCOUNT) table is used for calculating discounts on charges. Each rate schedule has a set of discount parameters.

Depending on the time of the day that a call is made, the system determines a discount factor (if any). The DISC field in this table indicates whether the discount percentage, ratio or the quoted rate (in CHARGE table) should be used when calculating the charge for a call. The DCOUNT table also indicates whether discounted rates should be used for the initial period or after a specified time. Discounts do not apply to the class charge or surcharges.

Additional notes:

- Datafill all schedules.
- Typically percentage is used as the discount type.
- Quoted discounting cannot be used when the schedule type for a particular schedule is MLT.

Datafill example for table DCOUNT

The following example shows sample datafill for table DCOUNT.

TOPS Call Processing Features (Rating) (continued)

MAP display example for table DCOUNT

```
SCHNAME              OVERLAY
_____________________________________________________________________
ONTQUE        RATIO  N N 13 12 23  0  0  0
CANUSA        PCENT  N N 35 60  0  0  0  0
TCTS          PCENT  N N 35 60  0  0  0  0
LOCAL         NODISC
ZERODOM       NODISC
CALLTYPETIER QUOTED N
ZEROOVS       NODISC
CARIBA        NODISC
BAHAMAS       QUOTED N
OVSA          NODISC
STACLASSTIER PCENT  N N 25 50  0  0  0  0
OVSH          QUOTED N
TELEQUE       RATIO  N N 13 23  0  0  0  0
MULTITIER     RATIO  N Y 14 12 34  0  0  0
TELEONT       RATIO  N N 13 23  0  0  0  0
TELENORAM     RATIO  N N 13 23  0  0  0  0
HAWAII        PCENT  N N 25 50  0  0  0  0
SERVICE       NODISC
```

Datafilling tables RBKSET/RBKMAP

When datafilling tables RBKSET/RBKMAP:

- Analyze datafill for logical rate progression within each schedule.
- In table RBKSET, datafill unused rate breaks and times with “ND 0000", respectively.

Datafilling table SUR

Analyze for logical surcharge added (before taxes) for each schedule.

Datafilling table HOLDAY

Ensure that no major holidays are missing and that fixed holidays are correct.

Datafilling table HOLTRT

Ensure correct treatment is specified for each holiday per schedule.

Datafilling table TMZONE

Datafill table TMZONE only if the TOPS switch is located near a timezone boundary and serving an end office in the adjacent time zone.

Datafilling tables TAXES, TAXMAP, and ROUND

Datafilling tables TAXES, TAXMAP, and ROUND:

- Allows taxes to be applied to the original charge only, or each of the three tax rates to be applied to the charge plus the previous tax (compounded).
- Allows fractional taxes in tenths of a percent. All taxes must be expressed as two digits in table TAXES. For example, a rate of 7% is datafilled as a rate of 70. A 4.5% rate is datafilled as 45.
- Allows table TAXMAP apply the taxes selectively to combinations of TARIFF and SCHEDULE. Analyze data for logical application of taxes.

Table TAXES is modified to allow the TOPS rating system to accept and properly calculate fractional taxes. This modification included increasing the upper limit of the three Rate fields to 817. The TAXES table is used by the Operating Company to specify the tax rate and method of combining taxes for each tariff.

Datafill example for table TAXES

The following example shows sample datafill for table TAXES. In this figure, rate 1 is 7.3 percent for the BELLONT tariff and 8 percent for the BELLQUE and TELEBEC tariffs.

MAP display example for table TAXES

```
TARIFF       RATE1    COMP2   RATE2  COMP3
_____________________________________________
BELLONT 73     N        00      N       00
BELLQUE 80     N        00      N       00
TELEBEC 80     N        00      N       00
```

Datafilling tables SRVRS, SERVNAME, and SERVSCRN

Following is a description of the functionality provided with BASIC TOPS software, OSB00101:

- Tables SERVNAME and SERVSCRN are used to mark calls as service type calls. When the call attempts to check table SRVRS and the table is not in the load, the call is presented to the operator as a service number. The operator must key in a rate step that corresponds to a service schedule in table SCHED (TERMTYPE=SRV). 555 must be set to a service type other than TOLLFREE in table SERVSCRN; this marks the call as a service call for rating purposes.

  In this case, the Operating Company must create a new service schedule and new rate step, and then instruct the operators to key in this new rate

TOPS Call Processing Features (Rating) (continued)

step for 555 calls. Alternatively, the Operating Company could change the rating type of the current schedule for 555 calls to TERMTYP=SRV. This could be cumbersome, since changing a schedule requires deleting entries in other tables first.

- Calls progressing through table SERVSCRN produce Call Code 009 AMA records.

Following is a description of the functionality provided with optional TOPS Service Billing, OSB00101:

- Table SRVRS allows a schedule and rate step to be defined to combinations of TARIFF and SERVNAME. Schedule names in table SRVRS must have TERMTYP=SRV datafilled in table SCHED.
- TOLLFREE cannot appear in table SRVRS - it is not required since free calls do not require a rate step.
- A called number should not be datafilled as both a local call and a service call. If both attributes are assigned to the number, the service designation overrides the local.
- 800 numbers cannot be datafilled in table SERVSCRN.

Datafilling table OVSRS

For each combination of tariff and country, the Overseas Rate Step (OVRSR) table lists the applicable rate schedule and rate step value, both of which index the Rate Schedule (SCHED) table.

Datafill example for table OVSRS

The following example shows sample datafill for table OVSRS.

MAP display example for table OVSRS

```
TRFCTY        SCHNAME     RATESTEP
_____________________________________________________
BELLONT       AUSTRIA       OVSA    501
BELLONT       FRANCE        OVSH    537
BELLONT       ANDORRA       OVSH    537
BELLONT       HONGKONG      OVSA    502
BELLONT       SOUTHIRELAND  OVSH    536
BELLONT       UK            OVSH    536
BELLONT       GREECE        OVSA    501
BELLONT       PANAMA        0VSH    536
```

Datafilling table COUNTRY

The Overseas Number to Country Name Mapping (COUNTRY) table associates an overseas country name with an overseas number and national number (if required).

Datafill example for table COUNTRY

The following example shows sample datafill for table COUNTRY.

MAP display example for table COUNTRY

```
COUNTRY            OVSNUM
_____________________________________________________________________
AUSTRIA              43
FRANCE               33
ANDORRA              33078
HONGKONG             852
SOUTHIRELAND         353
UK                   44
GREECE               30
PANAMA               507
```

Datafilling table OVSCC

So the TOPS program can verify the validity of overseas credit card numbers, the Overseas Credit Card (OVSCC) table provides the following information for each country defined in the system software:

- the minimum and maximum number of characters in the credit card number, including the country code and year letter
- the day on which a new credit card becomes valid and the day on which an old credit card expires. The year letter releases the credit card with a specific year.

Datafill example for table OVSCC

The following example shows sample datafill for table OVSCC.

MAP display example for table OVSCC

```
COUNTRY   MINCHARS   MAXCHARS   STARTDT   ENDDT
_____________________________________________________________________
FRANCE       12         12        JAN1     DEC31
UK            9          9        DEC1     DEC31
GREECE       10         10        JAN1     DEC31
PANAMA        9          9        JAN1     JAN31
```

TOPS Call Processing Features (Rating) (continued)

Datafilling table OVSBILL

The Overseas Billing Restrictions (OVSBILL) table provides the following information for each country defined in the system software:

- if collect calls are permitted to the country and, if so, whether or not station-to-station calls or just operator-assisted calls are permitted
- if the STA message is displayed on the Operator Position CRT when the operator attempts to complete a station call to the country
- if third number billing to numbers within the country is allowed.

Datafill example for table OVSBILL

The following example shows sample datafill for table OVSBILL.

MAP display example for table OVSBILL

```
COUNTRY       COLLECT   PERONLY   THIRDOK
_____________________________________________________
AUSTRIA          PER      N          N
FRANCE           ALW      N          N
ANDORRA          DEN      N          N
HONGKONG         PER      N          N
SOUTHIRELAND     PER      N          N
UK               PER      N          N
GREECE           DEN      Y          N
```

Datafilling table CCTR

The Country Code (CCTR) table is required in local, toll, or local/toll switching units arranged for Direct Dial Overseas (DDO) routing. The tandem uses international translations for a call when the TRANSYS field in the pretranslator is set to IN and a subscriber uses the 01 0r 011 call prefix in the dialing string for a call.

Datafill example for table CCTR

The following example shows sample datafill for table CCTR.

MAP display example for table CCTR

```
CCNAME GIVENCC   MINDIGSR   MAXDIGSR   TMTORRTE
_____________________________________________________
30       T         030        10       11 T OFRT  62 Y
33       T         033        10       11 T OFRT  63 Y
353      T         083         8       11 T OFRT  64 Y
43       T         043         7       12 T OFRT  62 Y
44       T         044         8       12 T OFRT  1022 Y
507      T         157        10       11 T OFRT  64 Y
55       T         055         8       12 T OFRT  65 Y
64       T         064         8       11 T OFRT  62 Y
81       T         081        10       11 T OFRT  63 Y
852      T         692         9       11 T OFRT  64 Y
```

Datafilling table MINCHG

This table implements the minimum charge feature (BR0336).

Datafill example for table MINCHG

The following example shows sample datafill for table MINCHG.

MAP display example for table MINCHG

```
SCHNAME       SMIN  SMINCN  PMIN  PMINCN
_____________________________________________
ONTQUE        2000   200    210    235
CANUSA        108    200    200    2000
TCTS          600    200    900    900
CALLTYPETIE   1000   1000    400    350
OVSA          1000   800    1300    500
STACLASSTIE   350    200    200     350
```

Datafilling table FXDNMAP

The Foreign Exchange Directory Number Map (FXDNMAP) table maps foreign exchange line numbers (pseudo hotel numbers) to actual hotel directory numbers.

Datafill example for table FXDNMAP

The following example shows sample datafill for table FXDNMAP.

TOPS Call Processing Features (Rating) (end)

MAP display example for table FXDNMAP

```
FXNUM        HOTELNUM
_____________________________________________________________
819785416    6133290411
```

Translation verification tools

TOPS Call Processing Features (Rating) does not use translation verification tools.

SERVORD

TOPS Call Processing Features (Rating) does not use SERVORD.

TOPS/Carrier Interworking

Ordering codes

Functional group ordering code: OSB00101

Functionality ordering code: not applicable

Release applicability

TOPS11 and up

TOPS/Carrier Interworking was introduced in TOPS11.

Prerequisites

To operate, TOPS/Carrier Interworking requires the following:

- Functionality BAS Generic, BAS00003
- Table TOPSFTR paramter TOPS_ON_OFF_SWITCH = Y

Description

This feature allows the TOPS switch to generate Call Detail Recording (CDR) records for billing TOPS calls. These TOPS CDR records are referred to as TDR records. Before this feature, only Extended Bellcore Format (EBAF) Automatic Message Accounting (AMA) records were generated for billing.

The AMADUMP tool is updated to support TDR records. Also, the CALLDUMP tool can be used to view TDR records.

This functionality is provided by the following feature:

Feature number	Feature name
AF7817	TOPS CDR Billing (Phase 1)

Operation

For details of the format, refer to the *TOPS Call Detail Recording (TDR) User's Guide*, 297-8403-904,

Note, TDR records are stored in Device Independent Recording Package (DIRP) billing files. Off switch storage by Distributed Recording Manager (DRM) and Supernode Data Manager (SDM) are not supported by this feature. These files are viewable and searchable by using the AMADUMP tool.

The TDR format contains different templates for each of the call types. Refer to new table TOPTDROP parameter TEMPLATE_TYPE in the datafill

TOPS/Carrier Interworking (continued)

procedure section for more information on the templates and special handling for OSSAIN calls.

Call record stream installation

It is recommended that the new TDR format map to a dedicated stream that uses the new TDRFMT format. Therefore, perform the following steps.

1. Datafill tables DIRPPOOL, DIRPSSYS, CRSFMT, and CRSMAP. Refer to the datafill procedure section.

2. Select a volume on the device datafilled in table DIRPPOOL field DEVTYPE.

The following example uses the file type DISK, as indicated in table DIRPPOOL from the datafill procedure section. Search any disk drives, from table DDU or SLM disks for an available volume. Usually disk drives are formatted with a volume name ending with the stream name. The following example shows that S00DAMA is a volume on SLM disk 0, that is formatted to record in the AMA stream.

MAP display example for choosing a volume

```
>diskut
Disk utility is now active.
DISKUT:
>lv s00d
Volumes found on the node CM matching prefix S00D:
------------------------------------------------------------------------
NAME           TYPE    TOTAL     FREE   TOTAL  OPEN  ITOC    LARGEST
                      BLOCKS    BLOCKS  FILES FILES FILES   FREE SEGMENT
------------------------------------------------------------------------
S00DIMAGE       STD   1310655   314799     6     0   4       168173
S00DISN         STD    245695    57568    21     0   0        45234
S00DXPM         STD    245695   158783    17     1   0       119871
S00DTEST        STD    122815   108991   136     0   0       100671
S00DAMA         STD    102335    31541    71     0   0        30515
S00DAUDIO       STD     20415    14095   100     0   0         9007
Total number of volumes found on node CM matching prefix S00D: 6
>lf s00dama

File information for volume S00DAMA:
{NOTE:  1 BLOCK = 512 BYTES }
------------------------------------------------------------------------
FILE NAME               O R I O O V   FILE  MAX    NUM OF    FILE   LAST
                        R E T P L L  CODE   REC   RECORDS    SIZE MODIFY
                         G C O E D D         LEN       IN      IN   DATE
                             C N                     FILE  BLOCKS
------------------------------------------------------------------------
R000102045701AMA          O F            0  2048       98    512  000102
R000102045702AMA          O F            0  2048        0    512  000102
R980610151801AMA          O F            0  2048        8    512  980610
R980610151802AMA          O F            0  2048        0    512  980610
DIRP_FILESEG              O F     O      0  2048      256   1024  000102
DIRP_FILESEG              O F     O      0  2048      256   1024  000102
DIRP_FILESEG              O F     O      0  2048      256   1024  000102:
```

In the above example, the DIRP_FILESEGs indicate that the volume has once been mounted by DIRP. These files indicate free space for the DIRP system. This volume is a good candidate.

3. Mount the volume by entering the volume in table DIRPPOOL as shown in the following example.

TOPS/Carrier Interworking (continued)

MAP display example for mounting a volume

```
>table dirppool;pos 0
MACHINES NOT IN SYNC – DMOS NOT ALLOWED
JOURNAL FILE UNAVAILABLE – DMOS NOT ALLOWED
TABLE: DIRPPOOL     0  AMAPOOL  REGULAR    DISK        $        $
$        $       $        $        $        $        $        $        $
     $       $        $        $        $        $        $        $
   $       $        $        $        $
>cha volume23 s00dama
MACHINES NOT IN SYNC – DMOS NOT ALLOWED
JOURNAL FILE UNAVAILABLE – DMOS NOT ALLOWED
ENTER Y TO CONTINUE PROCESSING OR N TO QUIT
>y
TUPLE TO BE CHANGED:     0  AMAPOOL  REGULAR    DISK        $        $
    $        $       $        $        $        $        $        $
 $        $       $        $        $        $        $        $        $
      $       $        $        $  S00DAMA
ENTER Y TO CONFIRM, N TO REJECT OR E TO EDIT.
>y
Regular volume S00DAMA allocated.
TUPLE CHANGED
JOURNAL FILE INACTIVE
```

4. Verify the volume is mounted as follows.

MAP display example for verifying the volume is mounted

```
>mapci nodisp;mtc;iod;dirp;query ama
MAPCI:
MTC:
IOD:
DIRP:
SSNAME SSNO SEQNO ROTATES POOLNO PARLPOOL EMERGENCY
AMA       0     1       0      0  NONE    ***YES***

REGULAR
FILE(S)  STATE VOLUME   RECCOUNT BLOCK E  V V_B VLID FNUM FRN#
ACTIVE   AVAIL S00DAMA         1     1 0 23 NO  8404 0005 6173
STANDBY1 AVAIL S00DAMA         0     0 0 23 NO  8404 0006 3168

PARALLEL
FILE              STATE VOLUME   BLOCK E  V V_B VLID FNUM FRN#
                   NONE :
```

The above example shows that the volume is been mounted and two files are open.

5. List the volume to view the file names as follows.

MAP display example for choosing a volume

```
>diskut
Disk utility is now active.
DISKUT:
>lf s00dama

File information for volume S00DAMA:
{NOTE:  1 BLOCK = 512 BYTES}
------------------------------------------------------------------------
FILE NAME               O R I O O V FILE   MAX    NUM OF    FILE   LAST
                        R E T P L L CODE   REC   RECORDS    SIZE  MODIFY
                         G C O E D D        LEN       IN      IN   DATE
                             C N                    FILE  BLOCKS
------------------------------------------------------------------------
R000102045701AMA         O F            0  2048        98     512 000102
R000102045702AMA         O F            0  2048         0     512 000102
R980610151801AMA         O F            0  2048         8     512 980610
R980610151802AMA         O F            0  2048         0     512 980610
A980705134301AMA         O F   Y        0  2048       256    1024 000102
A980705134302AMA         O F   Y        0  2048       256    1024 000102
DIRP_FILESEG             O F     O      0  2048       256    1024 000102
DIRP_FILESEG             O F     O      0  2048       256    1024 000102
DIRP_FILESEG             O F     O      0  2048       256    1024 000102
DIRP_FILESEG             O F     O      0  2048       256    1024 000102
DIRP_FILESEG             O F     O      0  2048       256    1024 000102
DIRP_FILESEG             O F     O      0  2048       256    1024 000102
DIRP_FILESEG             O F     O      0  2048       256    1024 000102
DIRP_FILESEG             O F     O      0  2048       256    1024 000102
DIRP_FILESEG             O F     O      0  2048       256    1024 000102
DIRP_FILESEG             O F     O      0  2048       256    1024 000102:
```

The above example shows that two files are open and prefixed with A, which means ACTIVE. If DIRP opens two files on the same volume, DIRP distinguishes them by the filename. In this example file, A980705134301AMA was opened first and then file A980705134302AMA.

AMADUMP cannot be used on the active file, there is no need to demount the file before viewing the records. Use of AMADUMP is only allowed for special file names AMA_ACTIVE and AMA_PARALLEL.

TOPS/Carrier Interworking (continued)

AMADUMP tool

AMADUMP is an existing tool that displays call information from a DIRP file formatted or unformatted (hex). AMADUMP handles billing records in multiple formats, and can filter files and search only for records with specific information. AMADUMP is described in TAM-1001-017, *Automatic Message Accounting (AMA) Tools User Guide*.

This feature enables AMADUMP to display call record information for the new TDR format. The AMADUMP commands, which are not changed, are described in a later section. To perform an AMADUMP of the TDR file, perform the following steps:

1. Determine a DIRP file name for use with AMADUMP. An example file name is R980610151801TDR. For information on finding a file name, refer to previous section.
2. Use the AMADUMPB command to dump the temporary AMA buffer for the specified stream to the DIRP output file. If the optional stream parameter is omitted, the default is the AMA stream. The following is an example command with stream TDR.

   ```
   >AMADUMPB TDR
   ```

   The stream is defined in table CRSFMT and used in table CRSMAP. Refer to the datafill procedure section.
3. Use the AMADUMP command to display records from the TDR file. The following is an example command.

   ```
   >AMADUMP TDR R980610151801TDR
   ```

AMADUMP commands

The following table describes the AMADUMP commands.

AMADUMP commands

Command	Description

AMADUMP <format > <DIRP file name>	This command enters the tool. The parameters are as follows:
	• format - identifies the format of the file to be displayed. The valid formats are: NT, INTL, CDR, CDRA, CDRB, CDRC, CDRCTEMTP, CDRD, BC, TDR.
	• file name - identifies the DIRP file to be displayed.
	Only one user is allowed in AMADUMP.
	When AMADUMP TDR <DIRP file name> is entered, only call record information for TDR records is displayed. Since TDR records can only be stored in a stream that uses the new TDRFMT format, there are only TDR records in the file, and therefore, no interactions with other formats.
	The following is an example.
	`>amadump tdr R980610151801tdr`
	Error messages are as follows:
	• If an invalid format is entered, the following error message is displayed.
	`>>> COMMAND ABORTED. UNKNOWN AMADUMP FORMAT: >>> VALID FORMATS ARE:>>> NT>>> INTL>>> CDR>>> CDRA>>> CDRB>>> CDRC>>> CDRCTEMP>>> CDRD>>> BC>>> TDR`
	Reissue the command with a valid format.
	• If an invalid file name is entered, the following error message is displayed.
	`>>>COMMAND ABORTED. UNABLE TO FIND FILE: <file_name>`
	Re-issue the amadump command with a valid file name.

TOPS/Carrier Interworking (continued)

AMADUMP commands

Command	Description
DUMP <call> <data> <hdr> <hex>	This command displays the call information from a DIRP file in a formatted or unformatted form. The parameters are as follows: • call - dumps header and call entries. Optional variables are as follows: — details - This variable dumps the record in a formatted form. If this variable is not used, the default is NODETAILS, which prints the file in unformatted form. — startblk - This variable specifies the starting block number to be displayed. — numblks - This variable specifies the number of blocks to be displayed. • data - dumps header, control, and data entries in C2C2 data blocks This parameter is not allowed for the TDR format. • hdr - dumps the block header • hex - dumps the data in hex format. This parameter has optional variables startblk and numblks. Interactions are as follows: • Call entries that are printed by the DUMP command can be screened based on fields that satisfy certain data patterns or time constraints specified by the FILTER command. • The DUMP DATA command is not used with the TDR format, it only applies to NT format. • The DUMP command can only be used on a DIRP file, and cannot be used in conjunction with CALLDUMP.

AMADUMP commands

Command	Description

DUMP (continued)	Example commands are as follows.
	• Dump the entire file in formatted form.
	`>dump call details`
	• Dump the records in formatted form, starting with the first block, and the next 20 blocks.
	`>dump call details 1 20`
	• Dump the entire file in unformatted form.
	`>dump call`
	• Dump the header information for the entire file.
	`>dump hdr`
	• Dump the file in hex form, starting with the first block, and the next 13 blocks.
	`>dump hex 1 13`
	Error messages are as follows:
	• If an invalid parameter (dump type) is entered, the following error message is displayed.
	`Invalid symbol: <DUMP TYPE> {HDR, CALL, DATA, HEX, NEW}Enter: <DUMP TYPE> [<FORMAT>] [<START BLK>] [<NUM BLKS>]`
	Re-issue the dump command with a valid type.
	• If a start block that is out of range is entered, the following error message is displayed.
	`>>>START BLOCK WAS NOT FOUND. >>>NO RECORDS MATCHING FILTER DATA WERE FOUND.>>>END OF FILE: R980318055705AMA`
	Check the size of the DIRP file by displaying files on the DIRP volume and re-issue the command.

TOPS/Carrier Interworking (continued)

AMADUMP commands

Command	Description
FILTER <add> <delete> <disable> <display> <enable>	This command screens billing data to search for specific information. The parameters are as follows: • add - Add a filter to the filter table. Once the filter table has one or more filters, it can be enabled and the filters are applied to the records. Variables are as follows: — field - This variable specifies the field name to filter. Before this feature, Bellcore fields were the only fields supported; however, this feature adds this capability to TDR records. — value - Specifies the screening values, which are: 0-9, A-F, and *. The asterisk is a wildcard. — logical - Logical operation to use with filters. The value is either *and* or *or*. The default is *and*. If multiple filters are present, the record is not printed unless all of the criteria is met. — range - Specifies the numerical range by which to filter the value. Valid entries are: eq (equal), neq (negative), lte (less than or equal), and gte (greater than or equal). The default is eq. • delete - Remove the filter from the filter table. The variable is as follows: — entry - Specifies the entry to be removed from the filter table. • disable - Disable filter screening. • display - Display the contents of the filter table. If the value *fields* is appended to the display command, all possible field names are shown. An optional variable is as follows: — fields - Print all the available fields in the billing records. • enable - Enable record screening. Interactions are as follows: • Addition of an entry into the filter table does not automatically enable the filter. The user must issue the filter enable command after adding all of the entries into the filter table. • The filter command can be used in conjunction with the dump and calldump commands.

AMADUMP commands

Command	Description

FILTER (continued)	Error and status messages are as follows:
	• No more than 50 entries can be held in the filter table. If an attempt is made to enter more than 50, the following error message is displayed.
	`COMMAND REJECTED. THE FILTER TABLE IS FULL. A MAXIMUM OF 50 ENTRIES ARE ALLOWED.`
	Reissue the command with no more than 50 entries.
	• If an invalid field name is entered, the following error message is displayed.
	`<field name> IS NOT A VALID FIELD NAME. TO SEE A LIST OF ALL VALID FIELD NAMES, PLEASE ENTER “FILTER DISPLAY FIELDS".`
	Review the list of fields by using the filter display fields command, and reissue the command with a valid field name.
	• If too many or few digits are entered for the *add* parameter *value* variable, the following error message is displayed.
	`SPECIFIED FILTER VALUE IS OF INCORRECT SIZE. FIELD <TDR FIELD NAME> CONTAINS <Y> CHARACTERS.`
	Reissue the command with the correct size.

TOPS/Carrier Interworking (continued)

AMADUMP commands

Command	Description

FILTER (continued)	Error and status messages are as follows (continued):
	• If an invalid parameter is entered, the following error message is displayed. The message gives the command syntax, which also is given for the help command.
	
	`Invalid symbol: <FILTER FUNCTION> {ENABLE,`
	`DISABLE,`
	`ADD <FIELD NAME> STRING`
	`<FILTERVALUE>STRING`
	`[ <LOGICAL/RANGEATTRIBUTE>{AND,`
	`OR,`
	`EQ,`
	`NEQ,`
	`LTE,`
	`GTE}]`
	`[<LOGICAL/RANGEATTRIBUTE> {AND,`
	`OR,`
	`EQ,`
	`NEQ,`
	`LTE,`
	`GTE}],`
	`DELETE <FILTER ENTRY NUMBER> {0 TO 50},`
	`DISPLAY [<DISPLAY OF VALID FIELD NAMES>{FIELDS}]}`
	`Enter: <FILTER FUNCTION>`
	
	Reissue the filter command with proper parameter: add, delete, disable, enable, or display.
	• If *abort* is entered instead of a valid parameter, the following error message is displayed.
	
	`>>> COMMAND ABORTED. ERROR ENCOUNTERED WHILE`
	`>>> READING FILTER FUNCTION PARAMTER.`
	
	Continue with adding the field name.
	• If the *add* parameter is entered with no variables, the following error message is displayed.
	
	`Next par is: <FIELD NAME> STRING`
	`Enter: <FIELD NAME> <FILTER VALUE>`
	`[<LOGICAL/RANGE ATTRIBUTE>][<LOGICAL/RANGE ATTRIBUTE>]`
	
	Add the value for the field.

AMADUMP commands

Command	Description

FILTER (continued)	Error and status messages are as follows (continued):
	• For the add parameter, if the field name was the last entered variable, the following error message is displayed.
	`Next par is: <FILTER VALUE> STRING`
	`Enter: <FILTER VALUE>  [<LOGICAL/RANGE ATTRIBUTE>]`
	`[<LOGICAL/RANGE ATTRIBUTE>]`
	Add the field value.
	• If a value is successfully added to the filter table, the following status message is given.
	`>>> FILTER SUCCESSFULLY ADDED AS FILTER ENTRY 1`
	`>>> NOTE: FILTER FUNCTION IS CURRENTLY DISABLED.`
	Continue adding more filters or enable the filter with the filter enable command.
	• If the filter is enabled, the following status message is displayed.
	`>>>COMMAND ACCEPTED.  THE FILTER FUNCTION IS NOW: ON`
	`>>>DUMP COMMANDS WILL SCREEN ON THE BASIS OF DATA`
	`>>>IN THE FILTER TABLE.`
	Proceed with the DUMP command.
	• If the filter is disabled, the following status command is displayed.
	`>>>COMMAND ACCEPTED.  THE FILTER FUNCTION IS NOW: OFF`
	• If the filter enable command is entered and the filter is already enabled, the following error message is displayed.
	`>>>THIS COMMAND WILL NOT DO ANYTHING. THE`
	`>>>FILTER FUNCTION IS ALREADY ENABLED.`
	• If the filter disable command is entered and the filter is already disabled, the following error message is displayed.
	`>>> THIS COMMAND WILL NOT DO ANYTHING. THE`
	`>>> FILTER FUNCTION IS ALREADY DISABLED.`

TOPS/Carrier Interworking (continued)

AMADUMP commands

Command	Description

FILTER (continued)	Error and status messages are as follows (continued):
	• If the filter delete command is given for a non-existent entry, the following error message is displayed.
	`>>> SPECIFIED FILTER ENTRY DOES NOT EXIST.`
	`>>> ENTER “FILTER DISPLAY" TO SEE VALID`
	`>>> ENTRY NUMBERS.`
	Reissue the command with a valid entry.
	• If the *filter display fields* command is entered, the following status message is displayed.
	`List of all valid AMADUMP TDR field names:`
	`----------`
	`<please see the appendix for a list of the field names that will be printed using this command>`
	• If the filter display command is entered and there are no defined filters, the following error message is displayed.
	`>>> THERE ARE CURRENTLY NO FILTERS DEFINED`
	Example commands are as follows.
	• Add the TDR originating number with value 201-220-1233 to the filter table. Once the filter is enabled, only TDR records with an originating number of 201-220-1233 are displayed.
	`>filter add t_originating_num 2012201233`
	• Delete the first *entry* in the filter table.
	`>filter delete 1`
	• Disable the filter.
	`>filter disable`
	• Enable the filter.
	`>filter enable`

TOPS/Carrier Interworking (continued)

AMADUMP commands

Command	Description

HELP <command>	This command describes the entered parameter *command*. Valid values for *command* are filter, dump, and amadump.
	Interactions are as follows:
	• The help command for filter and dump should be used inside the tool.
	• The help amadump command is to be used at the DMS switch CI level.
	The display for the *help dump* command is as follows:
	`The DUMP command is used to provide a formatted display of the records contained in a billing file. The available dump types are:`
	`HDR - Displays header information for each billing block`
	`CALL - Displays all records created by actual calls.`
	`DATA - Displays data records not created by calls.`
	`HEX - Displays all file contents in hexadecimal format.`
	`NEW - Displays all new call records on an open file since the last DUMP invocation, or since entering AMADUMP. NEW is only valid for actively recording AMA files.`

TOPS/Carrier Interworking (continued)

AMADUMP commands

Command	Description
HELP (continued)	The available display formats are: NODETAILS - Displays records without providing field name labels (Default). DETAILS - Displays records using field name labels. SUMMARY - Displays a record count for each block, and total record and block counts for the file. Actual records are not displayed. The DUMP command can be restricted to displaying records for a portion of the file by specifying START BLK and NUM BLKS. If filtering is enabled the DUMP command only displays those records which pass the filters. Parms: <DUMP TYPE> {HDR, CALL, DATA, HEX, NEW} [<FORMAT> {NODETAILS, DETAILS, SUMMARY}] [<START BLK> {1 TO 32767}] [<NUM BLKS> {1 TO 32767}]

AMADUMP commands

Command	Description
	The display for the *help filter* command is as follows: `The FILTER command is used to define a filter which is then used to screen records in order to determine if they may be displayed by the DUMP command. A filter is defined for a specific record field of interest. Any records which have the field specified by the filter, and the record field value matches the specified filter value, is displayed when the DUMP command is invoked. A multiple number of filters may be defined at once.`

HELP (continued)	`Parms: <FILTER FUNCTION> {ENABLE,`
	`DISABLE,`
	`ADD <FIELD NAME> STRING`
	`<FILTER VALUE> STRING`
	`[<LOGICAL/RANGE ATTRIBUTE> {AND,`
	`OR,`
	`EQ,`
	`NEQ,`
	`LTE,`
	`GTE}]`
	`[<LOGICAL/RANGE ATTRIBUTE> {AND,`
	`OR,`
	`EQ,`
	`NEQ,`
	`LTE,`
	`GTE}],`
	`DELETE <FILTER ENTRY NUMBER>{0 TO 50},`
	`DISPLAY [<DISPLAY OFF VALID FIELD`
	`NAMES> {FIELDS}]}`
	`Do you wish to see further information?`
	`Please confirm ("YES", "Y", "NO", or "N"):`

TOPS/Carrier Interworking (continued)

AMADUMP commands

Command	Description
HELP (continued)	The display for the *help amadump* command entered from the DMS switch CI level is as follows: `This tool allows the user to display the contents of files containing billing records by using the “DUMP" subcommand. Billing records of various formats can be handled. Record search capabilities are also provided with the “FILTER" subcommand. Enter “HELP DUMP" or “HELP FILTER" from the AMADUMP level for more information.`  `Parms: <FORMAT> STRING` `<FILENAME> STRING`  `Special purpose filenames:` `AMA_ACTIVE - Opens the currently mounted active AMA file.` `AMA_PARALLEL - Opens the currently mounted parallel AMA file.` `CALLDUMP - Allows use of AMADUMP filters for CALLDUMP.`

QUIT <variable>	This command quits the tool. The optional parameters are as follows:
	• all - Quits all tools and levels, including AMADUMP, and returns to the DMS switch CI level.
	• n - Quits AMADUMP and the specified number of DMS switch levels.
	Example commands are as follows:
	`>quit (quits the AMADUMP tool)`
	`>quit all (quits all tools and levels)`
	`>quit 3 (quits 3 DMS switch levels, including AMA DUMP)`

Example AMADUMP commands

The following are examples of using AMADUMP with TDR

MAP display example for AMADUMP with no filter commands

```
>amadumpb
AMA BUFFER WILL BE SENT TO OUTPUT FILE FOR STREAM: AMA
Please confirm (“YES”, “Y”, “NO”, or “N”):
>yes
COMMAND ACCEPTED. BUFFER HAS BEEN SENT TO OUTPUT FILE.
>amadump tdr R980610151801OCC
AMADUMP >>>
>dump call details

<** %% THIS WILL DUMP THE ENTIRE FILE, NO SCREENING, NO FILTERS %% **>

>>>TDR FILE R980610151801OCC IS BEING PROCESSED.
>>>REMINDER WARNING:  FILTER FUNCTION IS ENABLED.
>>>NO RECORDS MATCHING FILTER DATA WERE FOUND.
>>>END OF FILE: R980610151801OCC
```

TOPS/Carrier Interworking (continued)

MAP display example for AMADUMP with filter and dump commands

```
>amadumpb
AMA BUFFER WILL BE SENT TO OUTPUT FILE FOR STREAM:  AMA
Please confirm ("YES", "Y", "NO", or "N"):
>yes
COMMAND ACCEPTED. BUFFER HAS BEEN SENT TO OUTPUT FILE.
>amadump tdr R980610151801OCC
AMADUMP >>>>

>filter add tmpltid 2

>>> FILTER SUCCESSFULLY ADDED AS FILTER ENTRY 1

>>> NOTE: FILTER FUNCTION IS CURRENTLY DISABLED.

>filter display

Filter    Field                   Filter           Filter
entry     name                    value            attributes
-------------------------------------------------------------------
  1      tmpltid                    2                AND EQ
Note: Filtering is currently disabled.

>filter enable

>>>COMMAND ACCEPTED.  THE FILTER FUNCTION IS NOW: ON

>>>DUMP COMMANDS WILL SCREEN ON THE BASIS OF DATA IN THE FILTER TABLE.

>dump call details 2 4 %%   this command starts at the 2nd block and
                            applies the filter to the next 4 blocks
>>>TDR FILE R980610151801OCC IS BEING PROCESSED.
>>>REMINDER WARNING:  FILTER FUNCTION IS ENABLED.
>>>NO RECORDS MATCHING FILTER DATA WERE FOUND.
>>>END OF FILE: R980610151801OCC
```

MAP display example for AMADUMP with filter commands

```
>amadumpb
AMA BUFFER WILL BE SENT TO OUTPUT FILE FOR STREAM:  AMA
Please confirm ("YES", "Y", "NO", or "N"):
>yes
COMMAND ACCEPTED. BUFFER HAS BEEN SENT TO OUTPUT FILE.
>amadump tdr R980610151801OCC
AMADUMP >>>>

>filter add orignum 9199911234

>>> FILTER SUCCESSFULLY ADDED AS FILTER ENTRY 1

>>> NOTE: FILTER FUNCTION IS CURRENTLY DISABLED.

>filter add compind 2

>>> FILTER SUCCESSFULLY ADDED AS FILTER ENTRY 2

>>> NOTE: FILTER FUNCTION IS CURRENTLY DISABLED.

>filter display

Filter      Field                  Filter          Filter
entry       name                   value           attributes
-------------------------------------------------------------------
  1         ORIGNUM               9199911234        AND EQ
  2         COMPIND               2                 AND EQ
Note: Filtering is currently disabled.

>filter enable

>>>COMMAND ACCEPTED.  THE FILTER FUNCTION IS NOW: ON

>>>DUMP COMMANDS WILL SCREEN ON THE BASIS OF DATA IN THE FILTER TABLE.

>dump call details
>>>TDR FILE R980610151801OCC IS BEING PROCESSED.
>>>REMINDER WARNING:  FILTER FUNCTION IS ENABLED.
>>>NO RECORDS MATCHING FILTER DATA WERE FOUND.
>>>END OF FILE: R980610151801OCC
```

TOPS/Carrier Interworking (continued)

CALLDUMP tool

The existing CI tool CALLDUMP is changed to display formatted TDR billing records held in the temporary buffer to the screen and transfer the records to the DIRP output file.

The following example displays the formatted records.

```
>calldump
```

The following example displays the records in unformatted (hex) format

```
>calldump hex
```

For more information, refer to TAM-1001-017, *Automatic Message Accounting (AMA) Tools User Guide*.

The following is a description of CALLDUMP as described on the switch.

MAP display example for CALLDUMP description

```
>help calldump

Summary:
CALLDUMP is a tool which allows the user to display fully formatted
billing records at the users terminal.  To view  records the user
simply makes a billable call(s), goes onhook, and enters “CALLDUMP”.

Parms: [<Stream name (or “PREVIOUS”)> STRING] [<Format> {HEX, FULL}]

The first parameter may be one of the following:
   < stream > – Name of DIRP stream from which the billing records are
                to be obtained. “AMA” is the default.

   PREVIOUS –   Redisplays the billing records captured by the last
                invokation of “CALLDUMP”. Any abbreviation of
“PREVIOUS”
                is acceptable.

If HEX is given for parameter “Format”, then the dump is provided in
hexadecimal format. If FULL is given for parameter “Format”, then the
dump is provided in a fully detailed format.

Do you want to see more information on CALLDUMP? Please confirm
(“YES”, “Y”, “NO”, or “N”):

>y

                                (continued)
```

TOPS/Carrier Interworking (continued)

MAP display example for CALLDUMP description (continued)

```
                              C A L L D U M P

CALLDUMP outputs formatted billing records using the same format as
the AMADUMP command.  The main difference is CALLDUMP formats records
directly out of the CC's internal call record buffer rather than out
of a DIRP file as AMADUMP does.  Therefore, CALLDUMP does not require
any use of DIRP recording, DIRP files, or any other type of setup.
CALLDUMP is safe to use.  It does not affect billing records in any
way.  It does not interrupt DIRP recording if it is in progress.  The
only affect on DIRP recording is that the call record buffer is dumped
to DIRP before it is full (exactly the same affect as the AMADUMPB
command).  CALLDUMP has little impact on call processing real time.

AMADUMP filters can be applied to the CALLDUMP command by entering
“AMADUMP <format> CALLDUMP”.  Filters can be defined while in the
AMADUMP level.  The filters will then screen all records displayed by
CALLDUMP as long as the user is within the AMADUMP level.  The
filtering function has NO impact on billing records being recorded by
DIRP.
```

Logs

The following new logs are generated:

- TDR100: TDR Truncation Log. This log is produced when a TDR record is truncated due to table TOPTDROP parameter TDR_RECORD_SIZE. If TDR_RECORD_SIZE is shorter than the record length, the record is truncated. Therefore, the size should be increased.
- TDR101: TDR Padded Log. This log is produced when a TDR record is padded due to table TOPTDROP parameter TDR_RECORD_SIZE. If TDR_RECORD_SIZE is set to FIXED_SIZE and the record is shorter than the datafilled size, the record is padded. The length should be set to the longest template.
- TDR102: TDR SN Lost Data Log. This log is produced when the Combined Template is used and OSSAIN Custom Billing data is attached to the call. Since the Combined Template does not support OSSAIN Custom Billing, the OSSAIN Custom Billing data is lost.
- TDR200: TDR Call Entry Log. This log contains a hex dump of the TDR record being produced. This log is only produced if the GEN_RECORD_LOG parameter in table TOPTDROP is set to Y. This log is an informational log.

OMs

The following new OM groups measure TDR activity:

- TDRFTMPL: This group counts the number of times each template is used to format a TDR record.
- TDR: This group counts the number of times TDR records that are padded or truncated, and OSSAIN Custom Billing data is lost.

Translations table flow

The TOPS/Carrier Interworking translations tables are described in the following list:

- Table DIRPPOOL defines the device volumes recording the data.
- Table DIRPSSYS defines the operating parameters of each stream used in table CRSFMT.
- Table CRSFMT defines format characteristics for data streams.
- Table CRSMAP assigns a data stream to a call type.

The TOPS/Carrier Interworking translation process is shown in the flowchart that follows.

TOPS/Carrier Interworking (continued)

Table flow for TOPS/Carrier Interworking

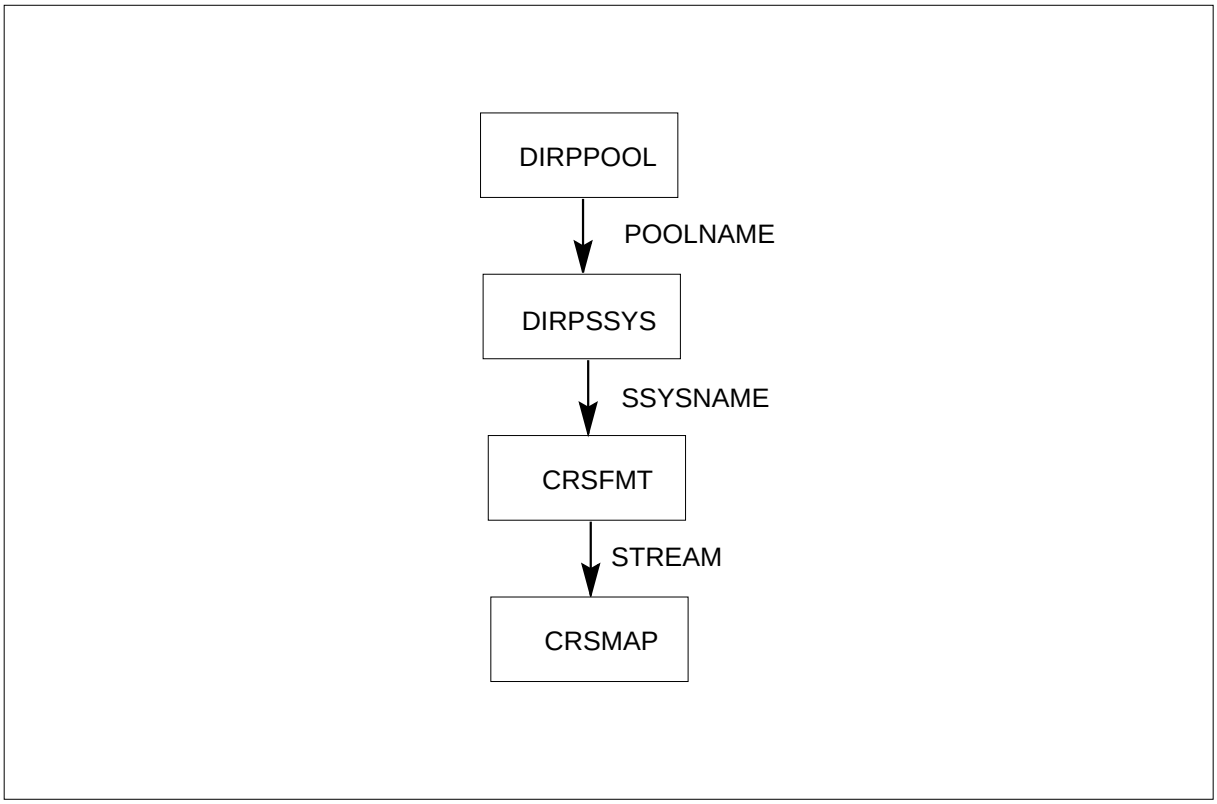

The following table lists the datafill content used in the flowchart.

Datafill example for TOPS/Carrier Interworking

Datafill table	Example data
DIRPPOOL	31 *TDRPOOL* REGULAR DISK $
DIRPSSYS	*TDR* Y 2 1 *TDRPOOL* $ CR MJ NA NA 30 30 $ N NA OPENED NNNNNNN 0 NORATATE BOTH NONE N 64 Y
CRSFMT	*TDR* TDRFMT N NIL_FM N N 0
CRSMAP	TOPS *TDR*

Limitations and restrictions

The following limitations and restrictions apply to TOPS/Carrier Interworking:

- TDR records must be mapped to a stream which uses the new TDRFMT format.
- Storage of TDR records by SDM and DRM is not supported.
- Formatting of TDR records by the Billing Server is not supported.
- The CI search tools CDRSRCH and FCDRSRCH do not support searching of TDR records.
- Since the CI search tools (CDRSRCH, FCDRSRCH) do not support TDR records, and AMADUMP TDR only supports TDR records, it is recommended that CDR records and TDR records be mapped to separate streams. This recommendation ensures that the searching functionality for the different records is preserved.
- If the Combined Template is chosen (TEMPLATE_TYPE in table TOPTDROP is equal to SINGLE_FIXED), then OSSAIN Custom Billing information can not be recorded.
- All TOPS calls on a single switch produce either TDR records or Bellcore AMA records. It is not possible to create both at the same time.

Interactions

The following paragraphs describe the interactions between TOPS/Carrier Interworking and other functionalities.

TDR records are supported for all switch loads that contain TOPS software.

The following table shows the supported tools, storage systems, and formatting systems for TDR records.

TDR record support

Function	Support	No support
Tools	AMADUMP and CALLDUMP	FCDRSRCH and CDRSRCH
Storage	DIRP	SDM and DRM
Formatting	On the switch	Billing server

Activation/deactivation by the end user

TOPS/Carrier Interworking requires no activation or deactivation by the end user.

TOPS/Carrier Interworking (continued)

Billing

For details on billing format, refer to the *TOPS Call Detail Recording (TDR) User's Guide*, 297-8403-904,

Table TOPTDROP controls several options that relate to TDR records. For more information see the datafill procedure section.

Station Message Detail Recording

TOPS/Carrier Interworking does not affect Station Message Detail Recording.

Datafilling office parameters

The following table shows the office parameters used by TOPS/Carrier Interworking. For more information about office parameters, refer to *Office Parameters Reference Manual.*

Office parameters used by TOPS/Carrier Interworking

Table name	Parameter name	Explanation and action
OFCENG	CRS_PRU_POOL2_SIZE and CRS_SUBRU_POOL5_SIZE	These parameters allocate extension blocks for the OSSAIN Custom Billing Template. For information on provisioning, see the *OSSAIN User's Guide*, NTP 297-8403-901.

Datafill sequence

The following table lists the tables that require datafill to implement TOPS/Carrier Interworking. The tables are listed in the order in which they are to be datafilled.

Datafill tables required for TOPS/Carrier Interworking

Table	Purpose of table
TOPTDROP	TOPS call detail recording record options contains office wide parameters to control TDR records.
DIRPPOOL	Device independent recording package pool defines the device volumes recording the data.
CRSFMT	Call record stream format defines format characteristics for specified data streams.

Datafill tables required for TOPS/Carrier Interworking

Table	Purpose of table
DIRPSSYS	DIRP subsystem defines the operating parameters of each stream used in table CRSFMT.
CRSMAP	Call record stream map defines the types of call recording data that are routed to the various streams.

Datafilling table TOPTDROP

TOPS call detail recording record options is a new table that contains office wide parameter to control TDR records.

This table is datafilled at initial program load (IPL) and there are no datafill order dependencies.

The following table describes the fields.

Datafilling table TOPTDROP

Field PARMNAME	Field PARMVAL	Explanation and action
BHR_RECORD_SIZE	FIXED_SIZE {8 to 128} or VAR_SIZE {8 to 128}	This parameter specifies the type and length in words of a Block Header Record (BHR). A BHR is created when a new block containing TDR call records is created in the DIRP file. The length should be set to the exact length of the Block Header Record. The values are as follows: • VAR_SIZE {8 to 128} - This entry selects a variable size, followed by the upper limit. And, TDR records are not padded. • FIXED_SIZE {8 to 128} - This entry selects a fixed size, followed by the size. The default is FIXED_SIZE 8.
CCR_RECORD_SIZE	FIXED_SIZE {7 to 127}, VAR_SIZE {7 to 128}, or NONE	This parameter controls the type and size of a Clock Change Record (CCR). A CCR is created when the time or data is changed in the DMS switch. For a description of the values, refer to parameter BHR_RECORD_SIZE. The default is FIXED_SIZE 7.

TOPS/Carrier Interworking (continued)

Datafilling table TOPTDROP

Field PARMNAME	Field PARMVAL	Explanation and action
ESR_RECORD_SIZE	FIXED_SIZE {5 to 128}, VAR_SIZE {5 to 128}, or NONE	This parameter controls the type and size of an Emergency Start Record (ESR). An ESR is created when a problem with the billing file causes an emergency rotate of the DIRP file. For a description of the values, refer to parameter BHR_RECORD_SIZE. The default is FIXED_SIZE 5.
GEN_PADDED_RECORD_LOG	Y or N	This parameter enables generation of the TDR101 log when padding occurs on TDR records. Records are padded when parameter TDR_RECORD_SIZE is set to FIXED_SIZE and the record size is smaller than the size in that parameter. Enter Y to enable the log. The default is N.
GEN_RECORD_LOG	Y or N	This parameter enables a hex dump of the TDR billing record into the TDR200 log. Enter Y to enable the dump. Since this dump can produce a large volume of logs, this parameter can be used to disable the dump. The default is N.
GER_RECORD_SIZE	FIXED_SIZE {24 to 128}, VAR_SIZE {24 to 128}, or NONE	This parameter controls the type and size of a Graceful End Record (GER). A GER is created when a manual rotate of the DIRP file has occurred. For a description of the values, refer to parameter BNR_RECORD_SIZE. The default is FIXED_SIZE 24.
GSR_RECORD_SIZE	FIXED_SIZE {5 to 128}, VAR_SIZE {5 to 128}, or NONE	This parameter controls the type and size of a Graceful Start Record (GSR). A GSR is created when a manual rotate of the DIRP file has occurred. For a description of the values, refer to parameter BNR_RECORD_SIZE. The default is FIXED_SIZE 5.

Datafilling table TOPTDROP

Field PARMNAME	Field PARMVAL	Explanation and action
SRR_RECORD_SIZE	FIXED_SIZE {5 to 128}, VAR_SIZE {5 to 128}, or NONE	This parameter controls the type and size of a Switch Restart Record (SRR). An SRR is created when a restart is performed on the DMS switch. For a description of the values, refer to parameter BNR_RECORD_SIZE. The default is FIXED_SIZE 5.
TDR_RECORD_SIZE	FIXED_SIZE {4 to 128} or VAR_SIZE {4 to 128}	This parameter specifies the type and length in words of each TDR record. The length should be set to the exact length of the longest template. The values are as follows: • VAR_SIZE {4 to 128} - This entry selects a variable size, followed by the upper limit. And, TDR records are not padded. • FIXED_SIZE {4 to 128} - This entry selects a fixed size, followed by the size. If a template is smaller than the entered size, zeros are added as padding to produce consistent size records. And, log TDR101 is produced, if enabled by parameter GEN_PADDED_RECORD_LOG, plus OM TDR register PAD is pegged. Record padding reduces the number of records per block of data. If a template is larger than the entered size, the record is truncated to the datafilled length. And, log TDR100 is produced, plus OM TDR register TRUNC is pegged. The default is FIXED_SIZE 72.

TOPS/Carrier Interworking (continued)

Datafilling table TOPTDROP

Field PARMNAME	Field PARMVAL	Explanation and action
TEMPLATE_TYPE	SINGLE_ FIXED or MULTI_FIXED	This parameter selects a TDR template, which defines the record format. The values are as follows: SINGLE_FIXED: The combined template is used for all TOPS calls. This template contains a superset of the fields from the individual templates. This template could be used if per call type records are not desired. While this option makes downstream processing easier, it causes larger records. This means that fewer records could be stored per block of data. Also, the OSSAIN Custom Billing data can not be produced. Log TDR102 is produced when the combined template is used and OSSAIN Custom Billing data is attached to the call. The combined template does not support OSSAIN Custom Billing.

Datafilling table TOPTDROP

Field PARMNAME	Field PARMVAL	Explanation and action
TEMPLATE_TYPE (continued)		MULTI_FIXED: The applicable individual template is used from the following list: • Call Completion - used for a call completion call • Call Transfer to IC Template - used for a transfer to a carrier • Listing Services Template - used for directory assistance • BLV/Interrupt Template - used for a busy line verification call • Charge Adjust Template - used for a charge adjust call • Intercept Template - used for an intercept call • IN Interworking Billing Template - used for an IN interworking call (presence of this template depends on functionality IN Operator Backup, ENSV0106) • General Assistance Template - used if none of the above templates are applicable • OSSAIN Custom Billing Template - used for an OSSAIN call and added to the above applicable template. There can be multiple OSSAIN templates for the same call. Multiple records can be associated downstream by the Sequence Number and Associated TDR fields. Associated records have the same Sequence Number and the Associated TDR field indicates an associated record. The default is MULTI_FIXED.

TOPS/Carrier Interworking (continued)

Datafilling table TOPTDROP

Field PARMNAME	Field PARMVAL	Explanation and action
TEMPLATE_VERSION	0 to 63	This parameter specifies the version of the TDR templates. Enter 0 since it is the only value that is supported currently. The default is 0. This parameter allows an office to update without updating the downstream processor for TDR records at the same time. Then, when the processor is updated, this field can be updated to the new version. Only the last three TDR template versions are supported. For example, once version 4 is released, version 0 is no longer supported. TDR templates may not change every TOPS release. On a dump and restore of table TOPTDROP, the old version becomes the new version unless that version is no longer supported on the new side. In that case the version is set to the lowest possible value. This parameter is not changed during dump and restore even if a new version of the templates is delivered with the load. This parameter must be changed manually after downstream billing has been changed to support the new template version.
UNANSWERED_CALL_ RECORDING	Y or N	This parameter indicates if TDR records are generated for unanswered calls. Enter Y to generate a TDR record for unanswered calls. The default is Y.
WORD_LAYOUT	READRL or READLR	This parameter specifies the word layout of TDR records. The values are as follows: • READLR - Read bits from left to right. • READRL - Read bits from right to left. This layout does not apply to the entire three word TDR header, which is read from left to right. The default is READRL.

Datafill example for table TOPTDROP

The following example shows sample datafill for table TOPTDROP.

MAP display example for table TOPTDROP

```
PARMNAME                                    PARMVAL
-------------------------------------------------------
BHR_RECORD_SIZE                          FIXED_SIZE 8
CCR_RECORD_SIZE                          FIXED_SIZE 7
ESR_RECORD_SIZE                          FIXED_SIZE 5
GEN_PADDED_RECORD_LOG                              N
GEN_RECORD_LOG                                     N
GER_RECORD_SIZE                         FIXED_SIZE 24
GSR_RECORD_SIZE                          FIXED_SIZE 5
SRR_RECORD_SIZE                          FIXED_SIZE 5
TDR_RECORD_SIZE                           VAR_SIZE 72
TEMPLATE _TYPE                            MULTI_FIXED
TEMPLATE_VERSION                                   0
UNANSWERED_CALL_RECORDING                          Y
WORD_LAYOUT                                  READRL
```

Datafilling table DIRPPOOL

This table contains the device volumes recording the data. It also states the device type, that is, disk or tape. For each entry in table DIRPSSYS, a pool of volumes must be specified in table DIRPPOOL. Notice in the datafill example that the pool specified to record TDR (TDRPOOL) is recording on disk, and no volumes are mounted

The following table shows the datafill specific to TOPS/Carrier Interworking for table DIRPPOOL. Only those fields that apply directly to TOPS/Carrier Interworking are shown. For a description of the other fields, refer to the data schema section of this document.

Datafilling table DIRPPOOL

Field	Subfield or refinement	Entry	Explanation and action
			This table is not changed. Enter a tuple for the new TDR stream. The POOLNAME is used in table DIRPSSYS

Datafill example for table DIRPPOOL

The following example shows sample datafill for table DIRPPOOL.

TOPS/Carrier Interworking (continued)

MAP display example for table DIRPPOOL

```
POOLNO POOLNAME POOLTYPE DEVTYPE  VOLUME0  VOLUME1  VOLUME2  VOLUME3
VOLUME4  VOLUME5  VOLUME6  VOLUME7  VOLUME8  VOLUME9 VOLUME10 VOLUME11
VOLUME12 VOLUME13 VOLUME14 VOLUME15 VOLUME16 VOLUME17 VOLUME18 VOLUME19
VOLUME20 VOLUME21 VOLUME22 VOLUME23
------------------------------------------------------------------------
    0  AMAPOOL  REGULAR    DISK         $        $        $        $
$        $         $         $         $        $        $        $
$        $         $         $         $        $        $        $
$        $        $         $
    3 SMDRPOOL  REGULAR    DISK         $        $        $        $
$        $        $         $         $        $        $        $
$        $        $         $         $        $        $        $
$        $       $        $
   31  TDRPOOL  REGULAR    DISK         $        $        $        $
$        $        $         $         $        $        $        $
$        $        $         $         $        $        $        $
$        $       $        $
```

Datafilling table CRSFMT

Table CRSFMT defines format characteristics for data streams. A billing data stream can be viewed as a collection of billing records in the same general format.

The following table shows the datafill specific to TOPS/Carrier Interworking for table CRSFMT. Only those fields that apply directly to TOPS/Carrier Interworking are shown. For a description of the other fields, refer to the data schema section of this document.

Datafilling table CRSFMT

Field	Subfield or refinement	Entry	Explanation and action
			Field FORMAT has new value TDRFMT.

Datafilling table CRSFMT

Field	Subfield or refinement	Entry	Explanation and action
KEY		name from table DIRPSSYS	Key. Enter a call data stream name defined in table DIRPSSYS for the new TDR format.
FORMAT		TDRFMT, BCFMT	Format. This field indicates the record format as follows: • TDRFMT - This format is new and indicates that the TDR format is used. • BCFMT - The Bellcore format is used.

Datafill example for table CRSFMT

The following example shows sample datafill for table CRSFMT.

MAP display example for table CRSFMT

```
KEY     FORMAT      DATADUMP   CDRSRCH   ALARMS   TIMERDMP   TIMERVAL
-------------------------------------------------------------------------
AMA      BCFMT       N          NIL_FM    N        N          0
BCA      BCFMT       N          NIL_FM    N        N          0
TDR      TDRFMT      N          NIL_FM    N        N          0
```

The AMA tuple above is a default entry.

Datafilling table DIRPSSYS

This table defines subsystems (streams) that record data. DIRP records billing plus other data. Since many volumes are mounted, billing data is spread across many volumes.

The following table shows the datafill specific to TOPS/Carrier Interworking for table DIRPSSYS. Only those fields that apply directly to TOPS/Carrier

TOPS/Carrier Interworking (continued)

Interworking are shown. For a description of the other fields, refer to the data schema section of this document.

Datafilling table DIRPSSYS

Field	Subfield or refinement	Entry	Explanation and action
			This table is not changed. Enter a tuple for the new TDR stream used in table CRSFMT.
SSYSNAME		up to 4 characters	Subsystem name. Enter a stream name for the new TDR format that is used in table CRSFMT.
POOLNAME		name from table DIRPPOOL	Pool name. Enter a name that is defined in table DIRPPOOL.

Datafill example for table DIRPSSYS

The following example shows sample datafill for table DIRPSSYS.

MAP display example for table DIRPSSYS

```
SSYSNAME READRITE NUMFILES MINFILES POOLNAME    FILENAME ALARM0 ALARM1
ALARM2 ALARM3 RETPD CRETPD PARLPOOL PARCONC MANDPALM FILEDATE SHEDDAYS
SHEDBASE SHEDINCR ROTACLOS AUTOXFER SPACROTE MAXDFSIZ PRIORTIO
------------------------------------------------------------------------
    AMA         Y         2         1   AMAPOOL            $      CR      MJ
  NA       NA     30     30        $        N        NA      OPENED    NNNNNNN
    0      NOROTATE    NONE      NONE       N        64         Y
   TDR         Y          2         1   TDRPOOL            $      CR      MJ
  NA       NA     30     30        $        N        NA      OPENED    NNNNNNN
    0      NORATATE    BOTH      NONE       N        64         Y
   SMDR        Y         2         1   SMDRPOOL           SMDRFL CR      MJ
 NA        NA  30      30        $        N       NA      OPENED     NNNNNNN
    0      NOROTATE    NONE      NONE       N         64        Y
```

Datafilling table CRSMAP

Table CRSMAP is used to map all TOPS calls into a billing stream.

The following table shows the datafill specific to TOPS/Carrier Interworking for table CRSMAP. Only those fields that apply directly to TOPS/Carrier

Interworking are shown. For a description of the other fields, refer to the data schema section of this document.

Datafilling table CRSMAP

Field	Subfield or refinement	Entry	Explanation and action
			This table is not changed.
KEY		TOPS	Key. This field is the key to the table. Enter TOPS for TOPS calls.
STREAM		name from table CRSFMT	Stream. Enter the stream name that is used in table CRSFMT. The predefined call data types are automatically datafilled to use the AMA stream, and the tuples cannot be deleted from table CRSMAP. If there is no entry in CRSMAP, then the default behavior is to map to the AMA stream. TOPS calls can be mapped to any valid stream in a given office which has a format of TDRFMT. Since the CI search tools (CDRSRCH and FCDRSRCH) do not support TDR records, and AMADUMP TDR only supports TDR records, it is recommended that CDR and TDR records are mapped to separate streams. The stream format should be TDRFMT. This recommendation ensures that the search capability for the different records is preserved.

Datafill example for table CRSMAP

The following example shows sample datafill for table CRSMAP.

MAP display example for table CRSMAP

```
KEY     STREAM
-------------------------------------------------------
CAMA    AMA
LAMA    AMA
TOPS    TDR
```

Translation verification tools

TOPS/Carrier Interworking does not use translation verification tools.

TOPS/Carrier Interworking (end)

SERVORD

TOPS/Carrier Interworking does not use SERVORD.

TOPS City Zone Rating

Ordering codes

Functional group ordering code: OSB00101

Functionality ordering code: not applicable

Release applicability

TOPS15 and up

Prerequisites

To operate, TOPS City Zone Rating requires the following:

- Functionality BAS Generic, BAS00003
- Table TOPSFTR paramter TOPS_ON_OFF_SWITCH = Y

Description

This functionality is provided by the following features:

Feature number	Feature name
BR0429	City Zone Rating

City Zone Rating is an extension of V & H (vertical and horizontal) Rating. It is a data base fill on a per office code basis. Fifteen different city zones are identifiable in the data base. The customer specifiable rate distance, e.g. 40, allows each city zone the ability to have different rate distances. The V & H calculations are automatically done based on the actual coordinates for the calling and called parties. If the mileage is greater than the customer specifiable rate distance then the caller's V & H coordinates are replaced by the city's central coordinates and the calculations are redone. The new mileage is then used with a minimum mileage of rate distance plus one.

Operation

None.

Translations table flow

The TOPS City Zone Rating translation process is shown in the flowchart that follows.

TOPS City Zone Rating (continued)

Table flow for TOPS City Zone Rating

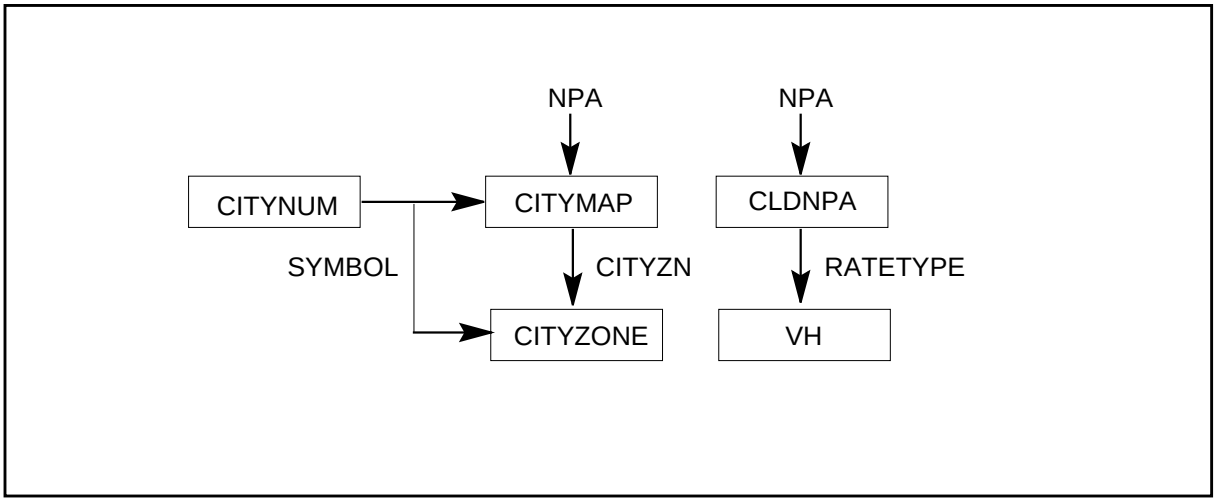

Limitations and restrictions

TOPS City Zone Rating has no limitations or restrictions.

Interactions

TOPS City Zone Rating has no functionality interactions.

Activation/deactivation by the end user

TOPS City Zone Rating requires no activation or deactivation by the end user.

Billing

TOPS City Zone Rating does not affect billing.

Station Message Detail Recording

TOPS City Zone Rating does not affect Station Message Detail Recording.

Datafilling office parameters

TOPS City Zone Rating does not affect office parameters.

Datafill sequence

The following table lists the tables that require datafill to implement TOPS City Zone Rating. The tables are listed in the order in which they are to be datafilled.

Datafill tables required for TOPS City Zone Rating

Table	Purpose of table
VH	TOPS Vertical & Horizontal Co-ordinates. This table inputs to the DMS machine the V and H coordinates for all NPA-NXX to be rated automatically.
CLDNPA	TOPS Called NPA and Calling Tariff to Rate Type Table. This table determines the rate schedule and rate step which apply on a call, given the calling NPA-NXX and called NPA or called NPA-NXX.
CITYNUM	City Number. This table associates the city name to a numeric (1 to 15) such that field CITY could be used as a key in Table CITYZONE.
CITYZONE	TOPS City Zone. This table gives the value of the rate distance required in deciding whether a new set of V & H co-ordinates are needed for the called party.
CITYMAP	TOPS City Map. This table identifies the CITY where zone rating is to apply, once its NPA and NXX become known in Table VH.

Datafilling table VH

The following table shows the datafill specific to TOPS City Zone Rating for Table VH. Only those fields that apply directly to TOPS City Zone Rating are shown. For a description of the other fields, refer to the data schema section of this document.

Datafilling table VH

Field	Subfield or refinement	Entry	Explanation and action
NPANXX		see subfields	NPA-NXX KEY. This field consists of subfields NPA and NXX.
	NPA	numeric	NPA. Enter either a calling or called NPA.
	NXX	numeric	NXX. Enter either a calling or called NXX within the NPA.

TOPS City Zone Rating (continued)

Datafilling table VH

Field	Subfield or refinement	Entry	Explanation and action
V		0 to 21505	Vertical Coordinate. Enter the vertical co-ordinate of the NPA-NXX point.
H		0 to 21505	Horizontal Coordinate. Enter the horizontal co-ordinate of the NPA-NXX point.

Datafill example for table VH

The following example shows sample datafill for table VH.

MAP display example for table VH

```
NPANXX          V          H
_____________________________________________________

 213  221      9207      7873
 212  263      4988      1378
```

Datafilling table CLDNPA

The following table shows the datafill specific to TOPS City Zone Rating for table CLDNPA. Only those fields that apply directly to TOPS City Zone Rating are shown. For a description of the other fields, refer to the data schema section of this document.

Datafilling table CLDNPA

Field	Subfield or refinement	Entry	Explanation and action
NPATRF		see subfields	CALLED NPA - Calling TAriff Key. Composed of subfields CLDNPA, TARIFF.
	CLDNPA	N 0/1 X where N= any numeric 0 to 9, X = any numeric 2 to 9	Called NPA. Enter the called NPA
	TARIFF	1 to 17 alphanumeric characters	CALLING TARIFF. Enter the tariff name that the originating NPA-NXX belongs to. This name must be known to table TARIFF. Cannot be the tariff name associated with tariff numer 0.

TOPS City Zone Rating (continued)

Datafilling table CLDNPA

Field	Subfield or refinement	Entry	Explanation and action
Overlay		see subfields	Composed of subfields determined by the rate type as follows: RATETYPE = PTP SUBFIELDS: None RATETYPE = VH SUBFIELDS: SCHNAME RATETYPE = EXT SUBFIELDS: SCHNAME RATETYPE = CZ SUBFIELDS: SCHNAME RATEYPE = SRA SUBFIELDS: SCHNAME, RATESTEP
	RATETYPE	VH, PTP, SRA, CZ, or EXT	RATE TYPE. Enter the Rate Type to define the method of Automatic Rate Step Determination for this combination of called NPA and calling Tariff as follows: VH for V & H Method, PTP for Point to Point Method, SRA for Single Rate Area Method, CZ for City Zone Method, EXT for Extended Rate Type.
	SCHNAME	1 to 17 alphanumeric characters	SCHEDULE NAME. When RATEYPE = PTP leave this field blank. When RATETYPE = VH, CZ, or SRA enter the Schedule Name applicable to this combination of called NPA and calling Tariff. When RATETYPE = EXT enter the schedule Name which applies when the combination of called NPA-NXX and calling Tariff is not found in table CLDNPAEX. The call is rated as if RATETYPE = VH. Must be known to Table SCHED with TERMTYPE = DOM. Cannot be the schedule name associated with schedule number 0.
	RATESTEP	0 to 99	RATE STEP. When RATETYPE = SRA enter the Rate Step applicable to this combination of called NPA and calling Tariff. Must be within the Rate Step limits LRS & HRS specified in table SCHED for the associated schedule Name.

TOPS City Zone Rating (continued)

Datafill example for table CLDNPA

The following example shows sample datafill for table CLDNPA.

MAP display example for table CLDNPA

```
NPATR                    OVERLAY
_____________________________________________________

506  BELLONT             VH  CANUSA
213  BELLONT             CZ  CANUSA
212  BELLONT             CZ  CANUSA
```

Datafilling table CITYNUM

The following table shows the datafill specific to TOPS City Zone Rating for table CITYNUM. Only those fields that apply directly to TOPS City Zone Rating are shown. For a description of the other fields, refer to the data schema section of this document.

Datafilling table CITYNUM

Field	Subfield or refinement	Entry	Explanation and action
VALUE		numeric 1-15	VALUE. Numbers can be chosen arbitrarily with the restriction that no two city names can be associated with the same number and no two numbers can be associated with the same city name.
SYMBOL		alphanumeric	SYMBOL FOR CITY NAME. Enter the city name that the above number is to be associated with. It must have 8 characters or less.

Datafill example for table CITYNUM

The following example shows sample datafill for table CITYNUM.

MAP display example for table CITYNUM

```
VALUE        SYMBOL
-------------------------------------------------------

1            LOSANG
2            NEWYORK
```

Datafilling table CITYZONE

The following table shows the datafill specific to TOPS City Zone Rating for table CITYZONE. Only those fields that apply directly to TOPS City Zone Rating are shown. For a description of the other fields, refer to the data schema section of this document.

Datafilling table CITYZONE

Field	Subfield or refinement	Entry	Explanation and action
CITYZN		alphanumeric	CITY. Enter the name of the city where zone rating is to apply. This name must be known to table CITYMAP field city.
RATEDIST		1-9999	RATE DISTANCE. Range is 1-9999. Enter the distance required in deciding whether a new set of V&H co-ordinates are needed to determine the type of rating.
V		0 - 21505	VERTICAL. Enter the Vertical co-ordinate to use in rating.
H		0 - 21505	HORIZONTAL. Enter the Horizontal co-ordinate to use in rating.

Datafill example for table CITYZONE

The following example shows sample datafill for table CITYZONE.

TOPS City Zone Rating (continued)

MAP display example for table CITYZONE

```
CITYZN       RATEDIST            V          H

LOSANG         40              9213       7878
NEWYORK        40              4997       1406
```

Datafilling table CITYMAP

The following table shows the datafill specific to TOPS City Zone Rating for Table CITYMAP. Only those fields that apply directly to TOPS City Zone Rating are shown. For a description of the other fields, refer to the data schema section of this document.

Datafilling table CITYMAP

Field	Subfield or refinement	Entry	Explanation and action
NPANXX		see subfields	KEY INTO TABLE CITYMAP. The key into Table CITYMAP is composed of fields NPA and NXX. See the appropriate field name for its definition.
	NPA	numeric 200-919	NPA. Enter a called NPA known to Table CLDNPA.
	NXX	numeric 200-919	NXX. Enter a called NXX within the above NPA.
CITY		alphanumeric	CITY. Enter the name of the city where zone rating is to apply. Only up to 15 possible values for this field can be in the switch at a given time.

Datafill example for table CITYMAP

The following example shows sample datafill for Table CITYMAP.

MAP display example for table CITYMAP

```
   NPANXX         CITY

213   221         LOSANG
212   263         NEWYORK
```

Translation verification tools

TOPS City Zone Rating does not use translation verification tools.

SERVORD

TOPS City Zone Rating does not use SERVORD.

TOPS Close Down

Ordering codes

Functional group ordering code: OSB00101

Functionality ordering code: not applicable

Release applicability

TOPS15 and later versions

Requirements

To operate, TOPS Close Down requires the following:

- Functionality BAS Generic, BAS00003
- Table TOPSFTR paramter TOPS_ON_OFF_SWITCH = Y

Description

The following features provide this functionality:

Feature number	Feature name
F1317	Operator Centralization - Remote
F2602	Remote ONI Via O.C.
F2605	TOPS Closedown
50039957	DA positions in an OC network
59006865	EOL Notification & EOL of TOPS ACD (TOPS12)

The TOPS Closedown package provides the closedown ability for a TOPS host, remote, or standalone configuration.

In versions released before BCS32, the host switch must be the first switch in a TOPS operator centralization network to receive an upgrade to the higher batch change supplement (BCS) release. The BCS32 contains the Host/Remote Networking by Queue Type (HRNQT), OSB00101, feature package. This package allows a TOPS office to serve as a host or as a remote. The queue type determines how the TOPS office functions. The host office must not be the first switch to upgrade the BCS release any longer. The host and the remotes are at BCS32 or later versions. The BCS32 does not require the host switch to be the first upgraded switch when feature package HRNQT is not present.

TOPS Close Down (continued)

Overview

Operator Centralization (OC) allows a TOPS host to perform the operator functions for remote toll centers. Connection to the host switch is necessary when the operator talks. The remote toll centers control all routing, translation, and ticketing functions.

The OC application software provides the following:

- Host Switch

  A DMS-200 or DMS-100/200 TOPS office. This office can extend operator services that operators provide to remote DMS-200 or DMS-100/200 toll centers.

- Remote Switch

  A DMS-200 or DMS-100/200. This switch can offer operator services that the host switch operators provide. A host can accommodate a maximum of 15 remote centers.

- Data Links

  Digital facilities provided for exchange of data between host and remote. The host switch requires these links to perform the OC functions.

- Voice Links

  The host and remote switch require digital or analog facilities to connect an operator to a call that requires operator assistance.

  Note: The switches only require a limited number of data links. Each call requires voice links.

The remote toll center retains all current trunking, translation, routing, and ticketing information. The host and the remote TOPS office each provide the same level of service to subscribers.

User Perspective

The TOPS closedown configuration allows operating companies to close down and open a TOPS OC host or standalone office. Operating companies can close down and open the host or standalone office at specified times of the day. When the host office is closed, the host or standalone office functions as a remote to another TOPS office. The remotes off the closed host switch to a new host.

Each OC host office normally provides operator services 24 hours a day. During light traffic periods, the office requires a small number of operators. Light traffic periods are normally from midnight to six a.m. Operating companies can combine the traffic of many host offices to one host to reduce

TOPS Close Down (continued)

the number of operator teams. This procedure allows many host offices to close. The procedure reduces the workforce requirements and overhead expenses for the operating company.

The TOPS closedown depends on Operator Centralization (OC). The OC can function with or without TOPS closedown. The TOPS closedown cannot function if OC is not present.

Operation

The following section describes the operation of TOPS Closedown.

TOPS OC Successful Call Process

Operators process calls that the subscriber originates at the host and at the remote switch by the same method. Current TOPS operation practices do not change.

When a subscriber originates a call, the remote switch recognizes that the call requires an operator. The remote assigns a virtual circuit to the call. A virtual circuit is a logical identifier that links the calls in the host and remote switches together. When the remote allocates this circuit, the remote assigns a data link member to the circuit on a random basis. The remote switch sends a request for operator to the host switch over a data link. The remote uses the assigned virtual circuit. Refer to section "Host OC Data Link Handling" for call processing flow diagrams.

When the host switch receives the request for operator, the host switch obtains an idle Operator Position. The host switch selects a voice link and connects the link to the Operator Position. The host switch sends a message to the remote switch over the data link. The message indicates that selection of an Operator Position and voice occurs.

The remote switch connects the selected voice link to the incoming subscriber trunk. The remote uses a 3-port conference circuit. The remote switch sends an update screen message that indicates the remote connections occurs.

The TOPS operators at the host switch press position keys to service the call. The host switch sends messages to the remote switch to indicate the keys the TOPS operators pressed.

To process the messages received, the remote switch performs the key functions that correspond to the position keys. The remote sends messages to the host switch to update the operator screen with key function results. The host switch updates the screen according to these messages.

When the operator obtains the information necessary to connect the called party, the remote switch connects the outgoing trunk to a 3-port conference circuit. The outgoing trunk outpulses the forward number.

The operator must press the Position Release key (POS RLS) to release the call from the position. This action makes a direct connection between the trunks that call and the called trunks. The remote switch releases the 3-port conference circuit. The remote switch releases the voice link and sends a release message to the host switch.

The host switch releases the voice link, the Operator Position, and the virtual circuit. The host switch sends a message to the remote switch. This message indicates the release of resources.

The remote switch releases the virtual circuit. When the call terminates, the system generates an Automatic Message Accounting (AMA) record.

TOPS OC Resource Allocation

Several resources are required for OC call processing. The resources appear in the following list:

- Virtual Circuit
- Operator Position
- Voice Link
- Voice Link Connections
- 3-port Conference Circuit
- 3-port Conference Circuit Connection
- Direct Connection between Called and Calling Trunks.

The sections that follow describe each resource. The sections describe resource allocation problems that can affect OC call processing.

When the switches cannot obtain a resource, the system sends the call to treatment. The treatments used are EMR4 for 0- call types and EMR3 for other 0+ call types. If the system cannot queue a call because the call waiting queue is full, the system uses the call queue overflow (CQOV) treatment. Enter these treatments in table TMTCNTL to provide a correct announcement or default announcement. Another name for a default announcement is a reorder. To attempt calls of type 0- again, enter the treatment in table TMTCNTL to route the call back to the operator queue. Perform this action after the system applies the announcement.

TOPS Close Down (continued)

Virtual Circuit

A virtual circuit is a logical identifier that links calls in the host and remote switches together.

When the remote switch obtains a virtual circuit, the remote switch sends a request for an operator message to the host switch. When the remote switch fails to obtain a virtual circuit, the remote switch routes the call to treatment.

Operator Position

When the host switch receives a request for an operator message, the call receives an idle operator.

If an operator is not available, the host switch checks the call waiting queue. If space is available in the call waiting queue, the switch adds the call to the queue. The switch sends a message to the remote switch. This message indicates that the call is queued for an operator. The remote switch returns ringing to the subscriber to indicate that the subscriber is in the call waiting queue. When a position becomes available, the remote switch obtains the position for the call.

If space is not available in the call waiting queue, the host switch takes down the virtual circuit. The host switch sends a message to the remote switch. The message indicates that space is not available in the call waiting queue. The remote switch routes the call to treatment.

Voice Link

When an Operator Position is available, the host switch selects a voice link. If a voice link is not available, the host switch releases the Operator Position. The host switch takes the call down. The host switch sends a message to the remote switch to indicate the problem. The remote switch routes the call to treatment. The 0- calls receive EMR4 and the 0+ calls receive EMR3.

Voice Link Connections

When a voice link connects to an Operator Position, the host switch sends a message to the remote switch. The message indicates the host switch made the connection.

If the first attempt to connect the voice link fails, the host switch releases the operator and the voice link. The host switch attempts to obtain a new position and voice link.

If a later attempt to connect the voice link fails, the host switch takes down the virtual circuit. The host switch sends a message to the remote switch to indicate the resource failure. The remote switch releases the virtual circuit and routes the call to treatment.

3-Port Conference Circuit

The remote switch receives a message from the host switch that indicates that the operator and voice link connections are complete. When the remote switch receives the message, the remote switch selects a 3-port conference circuit and a recording unit (RU).

If a 3-port conference circuit or RU is not available, the remote switch outputs a TOPS107 log report. This report indicates the resource failure and releases the voice link. The report sends a no resources available message to the host switch. The host switch releases the voice link and makes the Operator Position busy. The host switch places the call back in the call waiting queue.

The host switch makes the Operator Position busy to prevent a loop. To make the Operator Position busy, the host switch obtains the position released before. The loop occurs when resources are not available in the remote switch from the following:

- from the position released
- from the call that returns to the queue
- from the call that leaves the queue

3-Port Conference Circuit Connection

When the remote switch obtains the 3-port conference circuit and RU, the remote switch connects the voice link to the subscriber trunk. The remote switch uses the 3-port conference circuit.

The first attempt to make a connection can fail. If failure occurs, the remote switch releases the 3-port conference circuit, the RU, and the voice link. The remote switch sends a message to the host switch. The message indicates connection failure. The host switch releases the voice link. The host switch attempts to connect another voice link.

If a later attempt to make a connection fails, the remote switch takes down the call. The remote switch sends a release operator message to the host switch. The host switch releases the Operator Position and takes down the call.

Called and Calling Trunk Connection

When the operator releases the call, the remote switch releases the voice link and sends a released operator message to the host switch. The host switch releases resources and sends a released message back to the remote switch. The remote switch releases the virtual circuit.

After the remote switch releases the voice link, the remote switch attempts to make a direct connection between the called and calling parties. This action

TOPS Close Down (continued)

releases the 3-port conference circuit. If the direct connection between the called and calling trunks fails, the remote switch attempts to make the connection at intervals of 30 s. These attempts continue until the connection occurs or the call terminates.

When the call terminates, the remote switch generates an AMA record.

Resource Failures

The routes for an OC call if resource failures occur appear in the following section.

- Data Links

  If a data link does not function, the host switch shifts all messaging to a data link that functions. If a data link failure occurs after the switch connects the operator to the call, the call terminates. The subscriber receives correct treatment from the End Office. This treatment includes dial tone or reorder.

  Loss of messages can occur if the number of active data links required to carry the message load is not available. If there are no active data links, communication between the host and remote switches cannot occur. When a TOPS call originates at the remote switch and data links are not available, the call terminates.

- Voice Links

  When a TOPS call originates at the remote switch, the call does not require an immediate voice link to the operator. Failure to obtain a voice link at this point in the call does not affect a call. This failure can reduce the maximum number of virtual circuits. This condition causes a reduction in operator traffic. Another name for this reduction is load throttling.

  The failure of a connected voice link causes loss of voice communications. If the system detects the failure, the call terminates. The subscriber receives appropriate treatment from the End Office. Appropriate treatment includes dial tone or reorder. If the system does not detect failure, the operator or the subscriber must recognize the loss of voice. The operator or the subscriber can terminate the call.

  If an extended loss of voice links occurs, remote calls cannot exit the queue. This condition causes the queue to become full. A full queue prevents service to host or other remote calls. The system uses load throttling in the remote switch to prevent this condition. The system uses a formula that is two times the number of active voice links in service. The remote switch provides virtual circuits to initiate new requests to the host switch. The remote provides virtual circuits for a maximum of the number of calls currently at the position or enqueued. This number must be less than two times the number of voice links.

TOPS Close Down (continued)

Operator Centralization - Remote

The OC feature allows the operating company to handle traffic for several remote toll centers at one centralized operator location. A DMS-200 or DMS-100/200 TOPS host switch extends operator services to remote DMS-200. The DMS-200 can extend operator services to DMS-100/200 toll centers.

TOPS Stand-alone Configuration

The TOPS comprises Operator Positions, management and supervisory positions, printers, and service circuits. The system terminates circuits on the DMS-200 peripheral subsystem.

Voice and data circuits of the Operator Positions terminate on peripherals that are appropriate to the type of transmission facilities used. These peripherals include trunk modules for analog trunks or Digital Carrier Modules (DCM) or Digital Trunk Controllers (DTC) for DS-1 digital trunks.

In a system with analog facilities, each position terminates through 4-wire trunk circuits. A TOPS position requires one 4-wire trunk circuit for voice and one 4-wire trunk circuit for data. If a system uses digital facilities, a maximum of 12 positions can share one 24-channel DCM or DTC input. Each position has two channels. See the following figure for a description of termination of TOPS parts on the DMS-200.

TOPS Close Down (continued)

Termination of TOPS Parts on the DMS-200

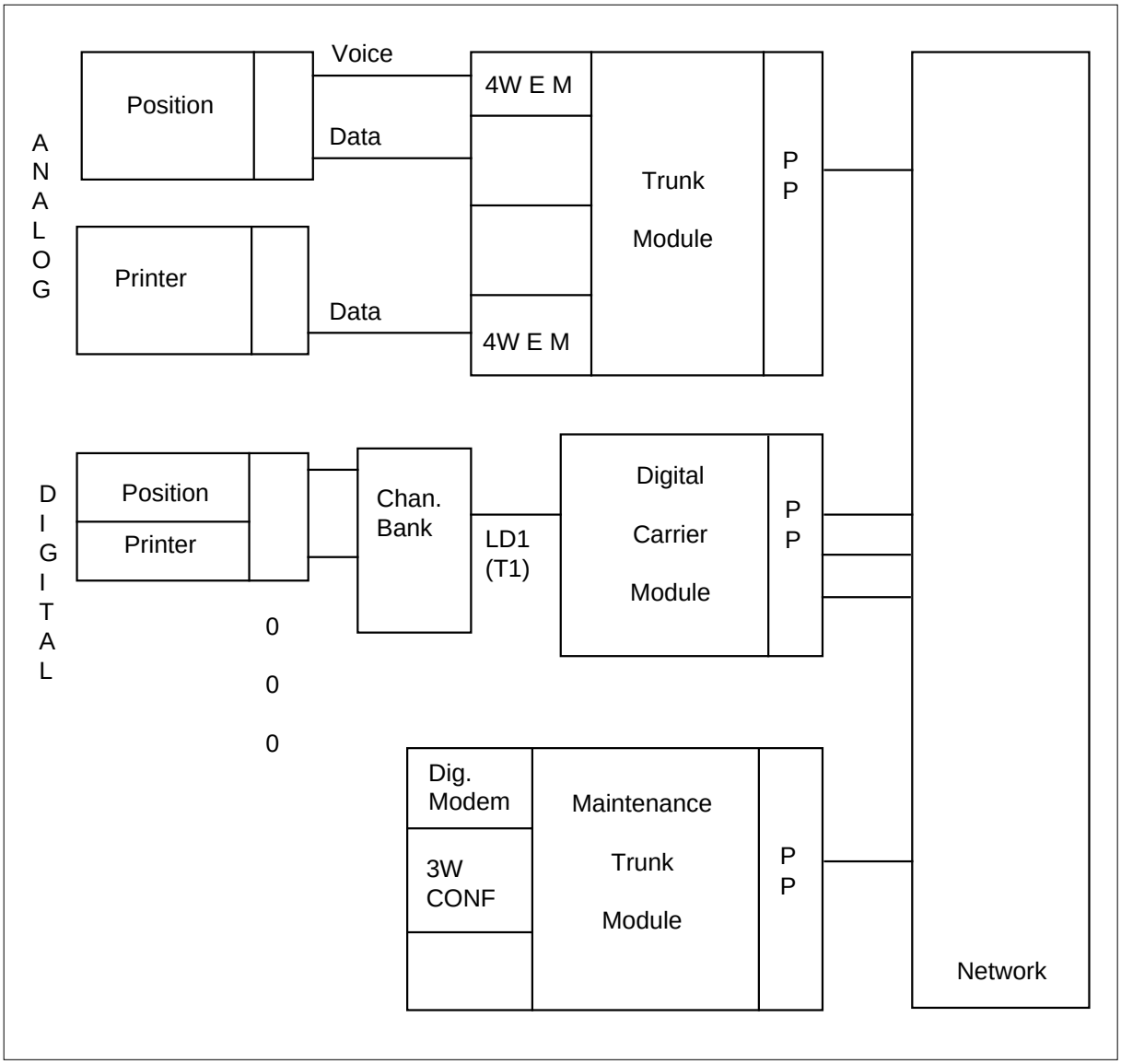

The data channels of the Operator Positions, supervisory positions, and printers connect to digital modems on the Maintenance Trunk Module (MTM). These components connect to the modems through the switching network. The switch does not establish new connections between the Operator Position and the digital modem for the position on each call. The system assigns the connections to the network when the system initializes the position.

When a call arrives at the Operator Position, the voice channel of the Operator Position connects to a dedicated port. This port is on a 3-port conference

circuit. The other two ports connect to the calling and called parties when the switch routes a call to the position. See the following figure for a description of TOPS position ready to receive calls.

TOPS Position Ready to Receive Calls

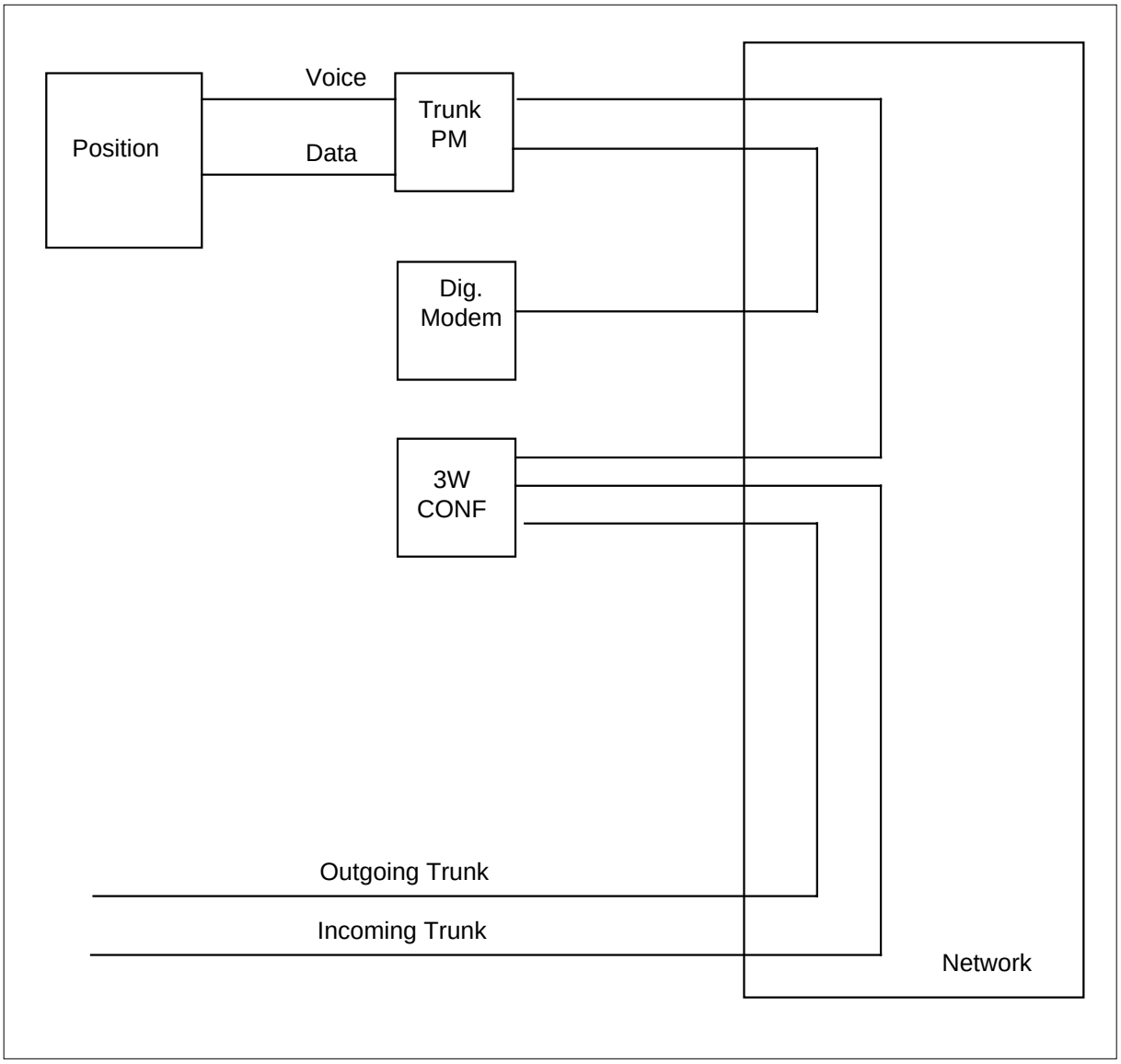

TOPS OC Configuration

The host and remote switches require two types of links. The links are data and voice links.

TOPS Close Down (continued)

Data links carry the call processing information between the two switches. The data link handles all messages when the switch establishes the call and when recalls occur. Several calls can share each data link. To allow this condition, the system considers each data link to contain virtual circuits.

Voice links connect the host operator to the calling party. A 3-port conference circuit at the remote switch makes the connection. Each call requires voice links.

Voice and data links are common controlled equipment. One data link can serve a maximum of 50 positions of traffic load. Each position load requires one voice circuit.

Operator positions that provide directory assistance (DA) or intercept services must have position numbers in table TOPSPOS. This requirement applies across the network and to all software releases. Position numbers must be different between the host and the remotes. Position numbers must be different between remotes off the same host.

TOPS Closedown

Each OC host switch provides operator services 24 hours a day. During light traffic periods, operating companies require less operators. Low traffic periods occur between midnight and 6 a.m. The TOPS Closedown redirects the traffic load at each host switch. The TOPS Closedown is an improvement to OC. This improvement allows operating companies to rearrange the relationships between remote switches and host switches in the TOPS network.

A normal OC network configuration appears in the following figure.

TOPS Close Down (continued)

Daytime OC Network Configuration

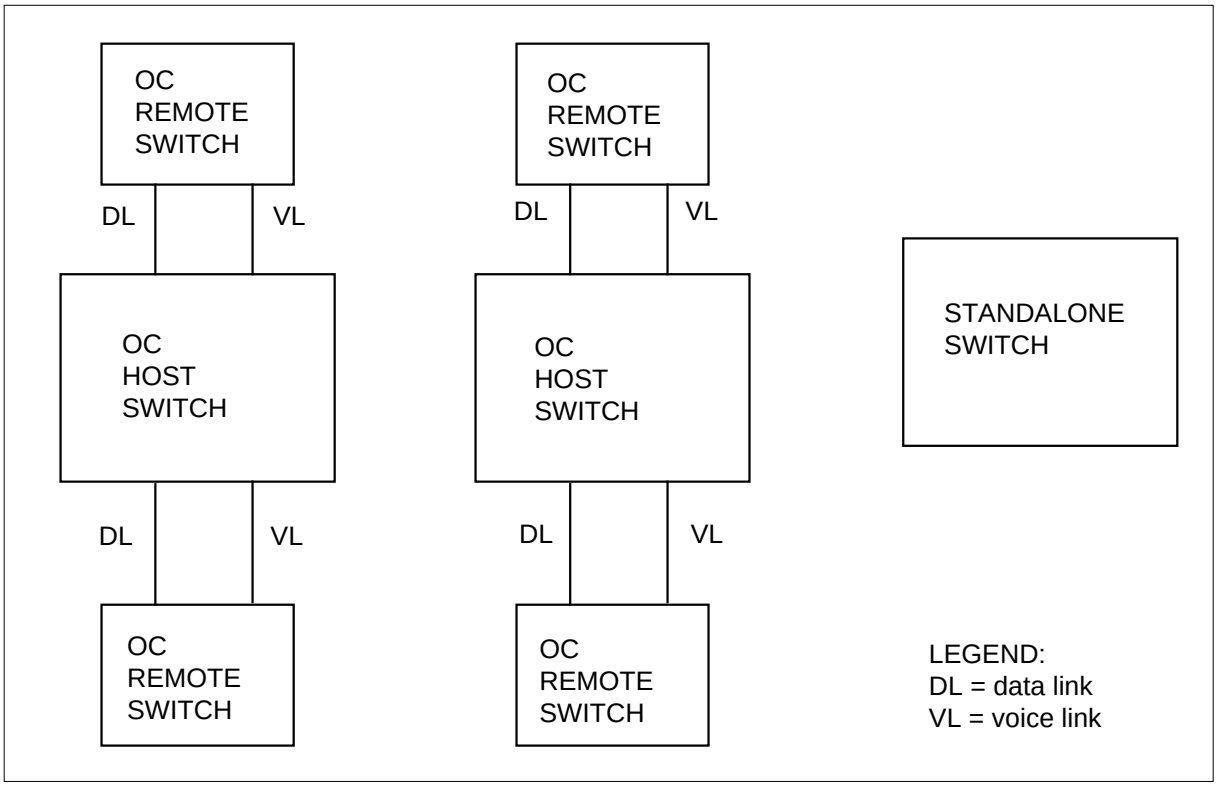

The same OC network configured for closedown appears in the following figure.

TOPS Close Down (continued)

OC Network Reconfigured for Closedown

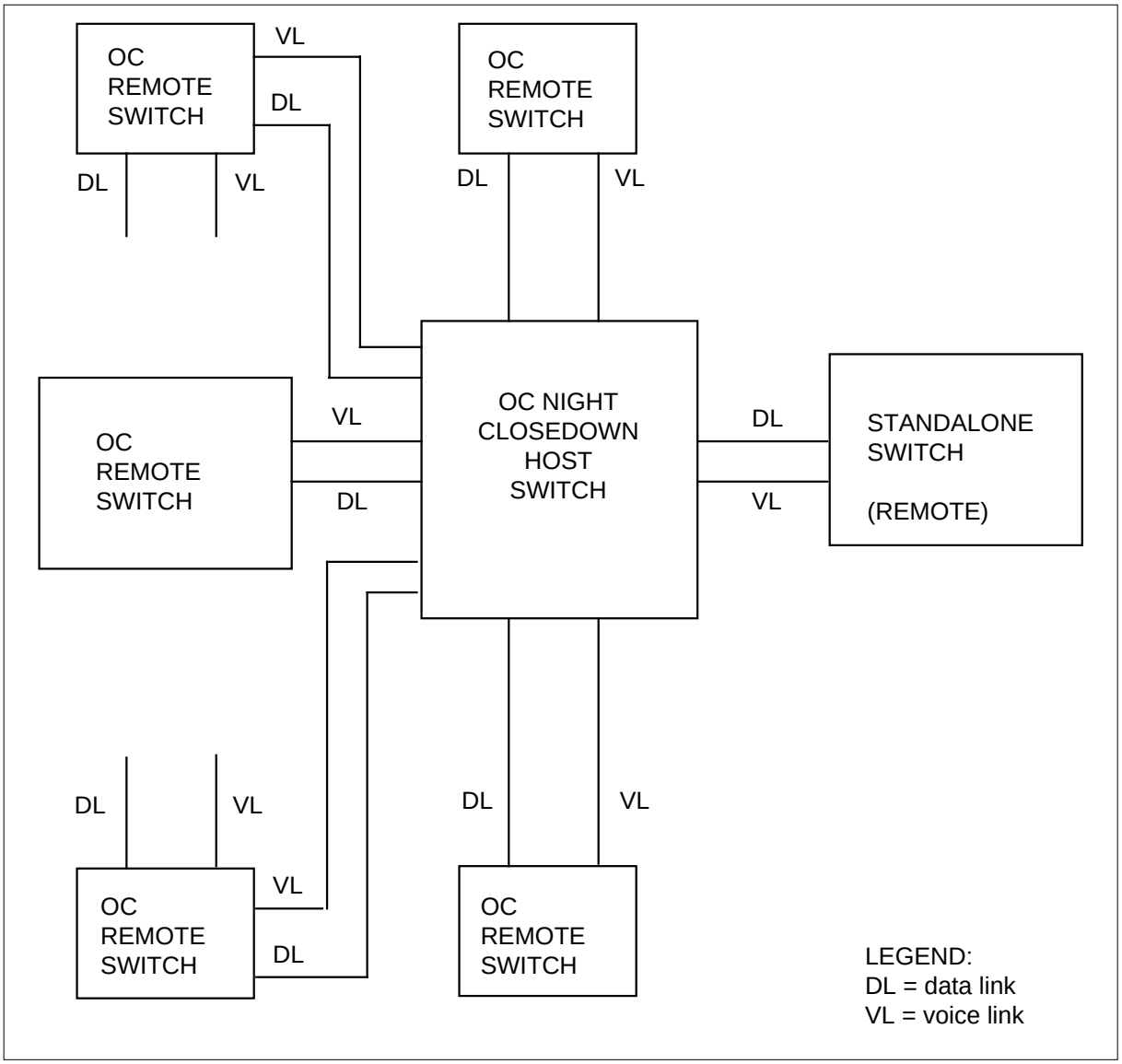

Operational modes

TOPS Closedown operates in two different modes. The modes are AUTO and MANUAL.

- Auto Mode

  Auto mode allows the TOPS network to change to the closed night configuration. Auto mode allows the TOPS network to change back to the open day configuration at times the user specifies. The system must instruct each switch that changes traffic when to close and when to open.

The system must identify the host switch that services the traffic of the switch when the switch is closed. The system initiates these changes automatically each day after activation.

- Manual Mode

  Manual mode allows you to instruct a switch to immediately change to the night configuration or to return to the day configuration. Manual mode provides the parameters that the user specifies to activate the Auto mode. Change the times when a switch must close and open in the Manual mode. You can designate instructions about which host switch must carry the traffic when the switch is closed. Perform this action in Manual mode.

  If a closed host switch contains subtending remote switches, the remote switch requires change in direction before the system closes the host switch. The closing times of the subtending remote switches must be before the closing time of the host switch. If you do not redirect a remote switch, the operator traffic of the switch continues at the host switch that closes. This event occurs even if the host switch that must close acts as a remote switch.

  When the administrator redirects remote switches, the administrator must make sure that enough manned positions are available at the new host switch. These positions must handle the additional traffic volume. If the required positions are not available, the call waiting queue at the new host switch overflows and loses calls.

  When you open a closed host switch, open and staff the host switch before you open the remote switches. The opening time for a host switch must be before the opening of time the associated subtending remote switches. If a remote switch opens before a host switch, the remote switch traffic appears at the host switch. This event occurs even when the closed host switch functions as a remote switch. If the host switch positions do not have staff, the call waiting queue overflows and loses calls.

Datafill

Enter data in the following tables to identify the circuits that implement the voice and data links:

- CLLI
- TRKGRP
- TRKSGRP
- TRKMEM
- DCMINV
- TOPSHDLC

TOPS Close Down (continued)

You can post these links at the Trunk Test Position (TTP) level of the MAP.

Table CLLI identifies the names that reference all voice link groups and data link groups.

Tables TRKGRP, TRKSGRP, and TRKMEM identify the circuits and characteristics of each voice link group.

Table DCMINV characterizes a DCM. This table allows the system to use the DCM to implement an OC data link.

Table TOPSHDLC associates the data links in a data link group with DCM circuits.

Tables OCOFC, OCGRP, and VLMEM identify the host and closedown host switches. This table allows you to identify the voice links and data links that provide connections to these switches.

Table OCOFC identifies the names that reference the host and closedown host switches.

Table OCGRP is in the index for each office. This table associates each office with the voice link group and data link group that connects the table. Table OCGRP designates the connected office as a host or as a remote. Field BCSLEVEL indicates the lower BCS level of the two connected switches.

Table OCHOST specifies the host switch.

Table VLMEM associates an office with each voice link in the voice link group.

All tables required to rate and route calls normally appear in a TOPS office. Enter data for these tables in the TOPS OC remote office. The following tables are the exception to this requirement:

- Table OPRDAT
- Table TOPSPOS

Routing functions as if the TOPS positions are at the remote switch. The system uses the pseudo CLLI TOPSPOS to perform delay call route to operators.

Normal Operator Centralization Configuration

A remote switch requires the following datafill to identify the host switches and the links associated with the switches:

- Host switch names
- Incoming Voice Links
- Host Data Links.

Refer to the following figure for a normal OC configuration.

Operator Centralization Configuration

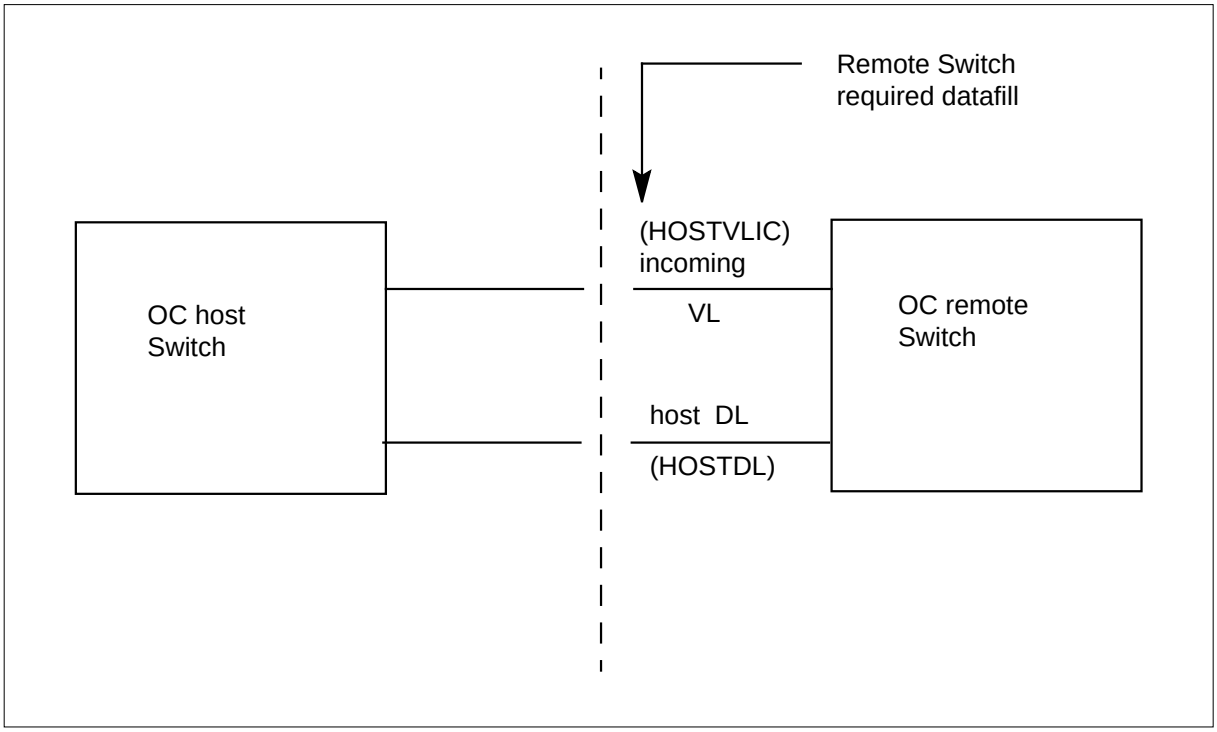

TOPS Closedown Configuration

A remote switch requires the following additional datafill when the switch must redirect traffic to a closedown host switch:

- Closedown Host names
- Incoming Voice Links
- Host Data Links.

> ***Note:*** The direction of the voice links in a remote switch is incoming. The direction does not change from normal OC application.

TOPS Close Down (continued)

Refer to the following figure for a TOPS closedown configuration.

TOPS Closedown Configuration

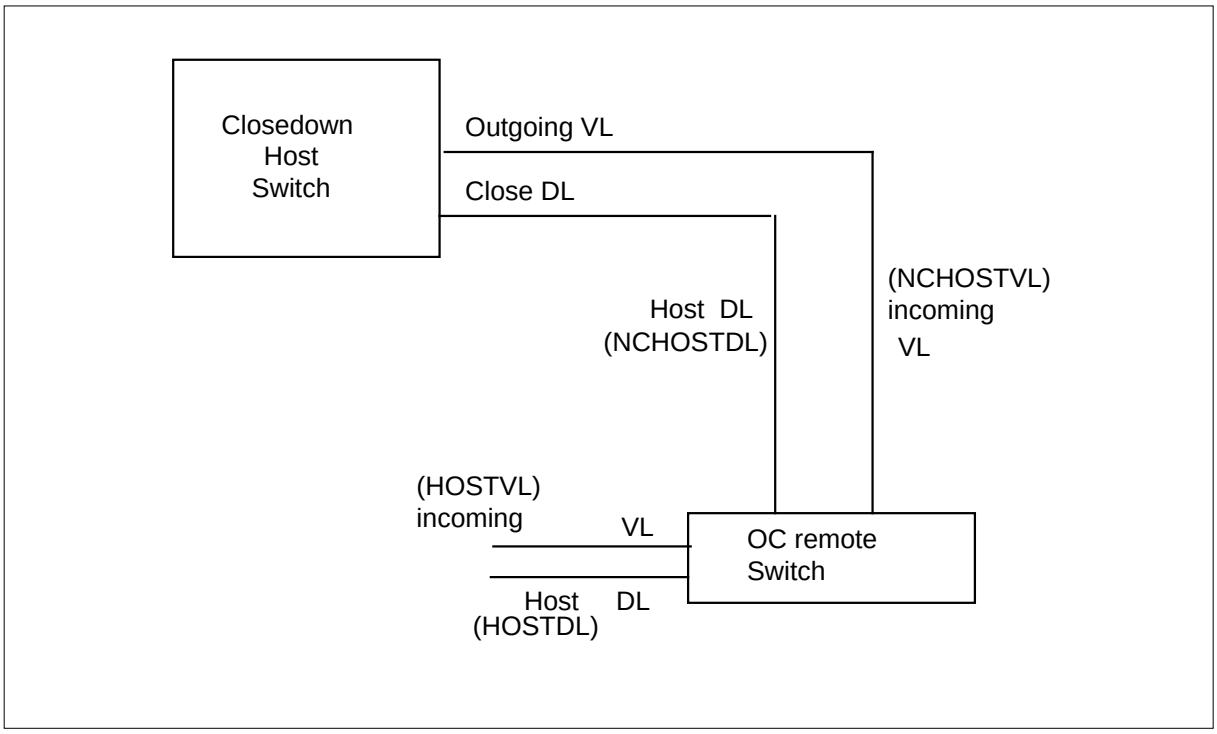

Supplementary Operator Centralization Trunk Group

The Supplementary Operator Centralization (SOC) trunk group is an IT trunk group type. The SOC allows an operating company to provide the following services between a TOPS host switch and remote switches:

- Busy Line Verification (BLV)
- Bill-to-Third Acceptance (Delay Calls)

Calls that an operator originates can use the SOC trunk group. These calls can use the SOC trunk group if trunk groups are not present between the host and remote switches. Local practice can allow you to combine delay call trunks. You can verify trunks on a single SOC trunk group from the host switch to a remote OC switch.

Translations table flow

Table flow is not available.

TOPS Close Down (continued)

Limits

The following limits apply to TOPS Close Down:

- Operator Centralization - Remote

  The host DMS-200 TOPS OC switch can support a maximum of 15 remote OC switches.

- A maximum of 50 remote positions of traffic for each data link with one backup data link determine host and remote data link provisioning. A minimum of two and a maximum of four data links can occur. The data links provide a maximum of approximately 150 positions that a remote switch serves. One data link is provisioned for redundancy.
- Each switch has a maximum of 255 voice links provided.
- A maximum of 320 virtual circuits or twice the available voice links can be present. Virtual circuits are data packets with a specified header message 1-320 on each data exchanged between the host and remote switches. When a call terminates, a new call can use the header identification. The header identification is the virtual circuit number.
- The TOPS OC host and remote switches are different DMS switches. Upgrade the TOPS OC host switch to a new BCS before any of the remote switches can upgrade. If feature package HRNQT is present, a switch can be a host and remote at the same time. Refer to the section on BCS upgrades in package HRNQT for this condition.
- The TOPS OC host and remote switches must be on compatible BCS releases that do not cross general release limits. Every third BCS is a compatible BCS release. During the upgrade process, the host and remote switches can be a maximum of one general BCS apart. The TOPS OC switches must not run on different BCS releases for extended periods.
- Some features for OC operation introduced in a BCS cannot function until all switches in the configuration have the same BCS. The BCS contains the feature. This condition does not affect current features.

Interactions

The following section describes the interactions between TOPS Close Down and other functionalities.

TOPS Closedown

Operator Centralization allows a maximum of 15 remote switches to share the Operator Positions at one host switch. The TOPS Closedown operates the same as normal configuration for operator centralization. The TOPS Closedown allows operating companies to direct remote switch traffic to a closedown host switch.

TOPS Close Down (continued)

To close, a remote switch directs the operator traffic to the closedown host switch that the user specifies. To open, a remote switch returns traffic to the OC host office that table OCHOST identifies.

TOPS OC Network Changes

The TOPS Closedown performs the TOPS OC network changes as follows:

Redirect Remote Operator Traffic to Closedown Host Switch

This action does not affect calls in progress that connect to operators at the OC host switch. This action does not affect calls in queue for operators at the OC host switch. In the remote switch, Table OCHOST specifies the name of the host switch. The closedown host switch treats incoming calls. The closedown host switch services calls in progress that are not attached to or in queue for an operator.

Redirect Remote Switch Operator Traffic Back to Original Host Switch

This action does not affect calls in progress that connect to operators at the closedown host switch. This action does not affect calls in queue for operators. The OC host switch treats incoming calls. In the remote switch, table OCHOST specifies the name of the host switch. The OC host switch services all calls in progress that are not attached to or in queue for an operator.

Automatic Performance of Traffic Redirection at Times the User Specifies

A remote switch can automatically redirect operator traffic to the closedown host closed switch at a time the user specifies. The remote switch can automatically return traffic to the OC host opened switch at a time the user specifies. The user can start and stop the automatic closure and opening of the switch.

Manual Performance of Traffic Redirection by User Instruction

The user can redirect traffic manually back to the closedown or to the original switch. The user can perform manual control when closedown is in the manual mode.

Provide Status of Closedown Feature

The status of the closedown feature and data that the user specifies can appear at the MAP display. To obtain the commands, enter OCNC at the MAP.

Assistance Position Calls

The TOPS Closedown makes sure the system serves Assistance Position calls at the same switch where the call first goes to an Operator Position. The system does not treat an Assistance Position call as a new call. The closure or opening of the switch does not affect the call immediately. This action affects

the call when the Operator Position and the Assistance Position detach after treatment of the call.

MCCS Queries that Use OC Data Link

In a remote switch environment, Table Engineered Office (OFCENG) contains office parameter TOPS_OC_REMOTE_BVC. The TOPS_OC_REMOTE_BVC is a boolean office parameter. This parameter determines how to complete MCCS queries. When the boolean is set to TRUE, the remote switch sends MCCS queries over an OC data link to the host switch. The host switch uses the common channel interoffice signaling (CCIS) network to query the Billing Validation Center. The query results transfer through the OC data link to the remote switch. If office parameter TOPS_OC_REMOTE_BVC is set to FALSE, the system assumes the remote switch has a CCIS connection. The system allows the remote switch to send a direct query to the Billing Validation Center.

A host switch can be closed in a remote switch environment with TOPS_OC_REMOTE_BVC set to TRUE. If this condition occurs, the remote switch sends queries to the closedown host switch. When the closedown host switch opens, the original host switch receives the queries for validation.

Activation/deactivation by the end user

The TOPS Close Down does not require activation or deactivation by the end user.

Billing

The system bills calls that originate in a remote switch in the remote switch. The system bills calls that originate in a host switch in the host switch. Voice links connect the operator to the call. The operator receives verbal instructions from the subscriber on how to bill and handle the call.

Station Message Detail Recording

The TOPS Close Down does not affect Station Message Detail Recording.

Datafilling office parameters

The host and remote OC switches must define the office parameters in the following table.

TOPS Close Down (continued)

The office parameters that TOPS Close Down uses appear in the following table. For additional information about office parameters, refer to *Office Parameters Reference Manual*.

Office parameters by TOPS Close Down

Table name	Parameter name	Explanation and action
OFCENG	TOPS_OC_ENVIRONMENT	The TOPS_OC_ENVIRONMENT office parameter specifies if the switching unit is a host or remote switch. The parameter value is TOPS_OC_ENVIRONMENT_RANGE. The range default is HOST. In the remote switch, the range must be set to REMOTE. The TOPS_OC_ENVIRONMENT office parameter must be set correctly before you enter OC tables. Do not change the parameter after you set the parameter. If feature package Host/Remote Networking by Queue Type is present, the function of this parameter changes. Refer to the HRNQT package description for additional information.

TOPS Close Down (continued)

Office parameters by TOPS Close Down

Table name	Parameter name	Explanation and action
OFCENG	TOPS_OC_REMOTE_BVC	In a remote switch environment, table OFCENG contains office parameter TOPS_OC_REMOTE_BVC. The TOPS_OC_REMOTE_BVC is a boolean office parameter. This parameter determines how to complete MCCS queries. When the boolean is set to TRUE, the remote switch sends MCCS queries over an OC data link to the host switch. The host switch uses the CCIS network to query the Billing Validation Center. The query results transfer over the OC data link to the remote switch. If office parameter TOPS_OC_REMOTE_BVC is set to FALSE, the system assumes the switch has a CCIS connection. The system allows the remote switch to send a direct query to the Billing Validation Center. If the switch is closed in a remote switch environment with TOPS_OC_REMOTE_BVC set to TRUE, the remote sends the queries to the closedown host switch. When the switch opens, the remote sends the queries to the original host switch for validation. Refer to GFX286AA for additional information on MCCS.

Datafill sequence

The tables that require datafill to implement TOPS Close Down appear in the following table. The tables appear in the correct entry order.

Datafill requirements for TOPS Close Down

Table	Purpose of table
CLLI	Common Language Location Identifier. This table identifies the far end of each announcement, tone, trunk group, test trunk, national milliwatt test lines, and service circuit.
TRKGRP	Trunk Group. This table contains information about trunk groups.

TOPS Close Down (continued)

Datafill requirements for TOPS Close Down

Table	Purpose of table
TRKSGRP	Trunk Subgroup. This table contains information about each subgroup associated with a trunk group defined in table TRKGRP.
TRKMEM	Trunk Member. The data for each trunk specified in the trunk group and subgroup tables appears in this table.
DCMINV	Digital Carrier Module Inventory. The assignment data that specifies if the digital carrier module (DCM) is for a TOPS OC datalink application appears in this table.
TOPSHDLC	TOPS High-speed Data Link Controller. The data links provided for the host and remote switches and the DCM assignments for the switches appears in this table.
OCOFC	Operator Centralization Office. This table matches an office name to a numeric. You can use OFCNAME as a key for Table Operator Centralization Group (OCGRP).
OCGRP	Operator Centralization Group. This table identifies the voice and data link groups that connect to the offices entered in table OCOFC. Table OCGRP determines if the connected office is a host or remote.
OCHOST	Operator Centralization Host. This table identifies the host switch.
VLMEM	Voice Link Member. This table maps voice link terminations between OC-equipped switches. Table VLMEM associates an office with the separate voice links in the voice link group of the office.
TOPSPOS	TOPS Position. This table specifies functions and characteristics of TOPS positions and devices.

Datafilling table CLLI

Table Common Language Location Identifier (CLLI) contains CLLI codes that identify each of the following:

- each announcement
- tone
- trunk group or trunk group size
- administrative information

The table must define voice link group CLLIs and data link group CLLIs to the host switch. The table must define voice link group CLLIs and data link group CLLIs to the closedown host switches.

Datafill example for table CLLI

Sample datafill for table CLLI appears in the following example.

MAP example for table CLLI

```
CLLI         TRKGRSIZ    ADMININF
_____________________________________________________
HOSTVLIC     64          HOST_VOICE_LINK_INCOMING
HOSTDL       32          HOST_DATA_LINK
```

Sample datafill for table CLLI appears in the following example. The table must define voice link group CLLIs and data link group CLLIs to the closedown host switches. Refer to the following figure for example datafill.

MAP example for table CLLI (Closedown)

```
CLLI         TRKGRSIZ    ADMININF
_____________________________________________________
NC HOSTVLIC  64          NCHOST_VOICE_LINK_INCOMING
NCHOSTDL     32          NCHOST_DATA_LINK
```

Datafilling table TRKGRP

Table Trunk Group (TRKGRP) identifies trunk groups in a TOPS DMS-200 or DMS-100/200 switch. You must enter the voice link CLLI in table TRKGRP. The trunk group type is intertoll (IT). The direction of the remote voice links that connect to the host switch and to the closedown host switch is incoming (IC). You must enter all voice links to the host switch.

Datafill for TOPS Close Down for table TRKGRP appears in the following table. The fields that apply to TOPS Close Down appear in this table. See the data schema section of this document for a description of the other fields.

Datafilling table TRKGRP

Field	Subfield or refinement	Entry	Explanation and action
GRPTYP		IT	
DIR		IC	

Datafill example for table TRKGRP

Sample datafill for table TRKGRP appears in the following example.

TOPS Close Down (continued)

MAP example for table TRKGRP

```
GRPKEY          GRPINFO
_____________________________________________________________
HOSTVLIC    IT  99  EML6  NCTC  IC IA MIDL
```

You must enter additional voice links to the closedown host switch. Refer to the following figure for example datafill.

MAP example for table TRKGRP (Closedown)

```
GRPKEY          GRPINFO
_____________________________________________________________
NCHOSTVLIC    IT  99  EML6  NCTC  IC IA MIDL
```

Datafilling table TRKSGRP

Table Trunk Subgroup (TRKSGRP) identifies the auxiliary information for each subgroup assigned to one of the trunk groups in table TRKGRP. You must enter the voice link CLLI in table TRKGRP. The direction of the remote voice links that connect to the host switch and to the closedown host switch is incoming (IC). You must enter all voice links to the host switch.

Datafill example for table TRKSGRP

Sample datafill for table TRKSGRP appears in the following example.

MAP example for table TRKSGRP

```
SGRPKEY     CARCODE                                SGRPVAR
_____________________________________________________________
HOSTVLIC    0  DS1SIG  STD IC  DP  IM  0 0 NO NO N N Y 70
```

You must enter additional voice links to the closedown host switch. See the following figure for example datafill.

MAP example for table TRKSGRP (Closedown)

```
SGRPKEY     CARCODE                                SGRPVAR
_____________________________________________________________
NCHOSTVLIC  0  DS1SIG  STD IC  DP  IM  0 0 NO NO N N Y 70
```

Datafilling table TRKMEM

Table Trunk Member (TRKMEM) identifies specified data. This data associates with each trunk assigned to one of the trunk groups or subgroups. Table TRKGRP and table TRKSGRP specify the trunk groups or subgroups. You must enter all voice links to the host switch.

Datafill example for table TRKMEM

Sample datafill for table TRKMEM appears in the following example.

MAP example for table TRKMEM

```
CLLI        EXTRKNM     SGRP    MEMVAR
_____________________________________________________
HOSTVLIC    3701        0       DCM 0  0 21
HOSTVLIC    3702        0       DCM 0  0 22
HOSTVLIC    3703        0       DCM 0  0 23
```

In the remote switch, additional voice links to the closedown host switch are required. The direction of the additional remote voice links does not change from normal OC operation. See the following figure for example datafill.

MAP example for table TRKMEM (Closedown)

```
CLLI        EXTRKNM     SGRP        MEMVAR
_____________________________________________________
NCHOSTVLIC      3701    0   DCM     0 0 21
NCHOSTVLIC      3702    0   DCM 0   0 22
NCHOSTVLIC      3703    0   DCM 0   0 23
```

Datafilling table DCMINV

The assignment data that specifies if the DCM is for a TOPS OC datalink application appears in table DCMINV.

Datafill example for table DCMINV

Sample datafill for table DCMINV appears in the following example.

TOPS Close Down (continued)

MAP example for table DCMINV

```
DCMNM     FRTYPE    FRNO SHPOS FLOOR     RO  FRPOS EQPEC    LOAD LKDATA    EXECS

DCM  0    DCE       0    18        6    B    20   2X31AC
                                             RDCMHA02
(1 0)   (0 27)      (0 42)                  (1 26)$

                                       DCMEX OCDL DCM ( 0 DEFAULT N)

                                             (1 DEFAULT N)
                                             (2 DEFAULT N)
                                             (3 DEFAULT N)
                                             (4 DEFAULT N)

DCM  1    DCE       0    32        6    B    20   2X31AC
                                             RDCMHA02
(1  18)   (0 38)    (0 17)                  (1 44)$

                                       DCMEX OCDL DCM ( 0 DEFAULT N)

                                            (1 DEFAULT N)
                                            (2 DEFAULT N)
                                            (3 DEFAULT N)
                                            (4 DEFAULT N)
```

Datafilling table TOPSHDLC

Data links are available for the host and remote switches and the DCM assignments for the switches. The data links appear in table TOPS High-speed Data Link Controller (TOPSHDLC). Each remote switch can have three OC data link assignments. The DCM data link assignments must occur on DCM circuit 0 and DCM timeslot 1 for each data link. Each data link must have a separate DCM. You must enter data links to the host switch.

Datafill for TOPS Close Down for table TOPSHDLC appears in the following table. The fields that apply to TOPS Close Down appear in the table. See the data schema section of this document for a description of the other fields.

Datafilling table TOPSHDLC

Field	Subfield or refinement	Entry	Explanation and action
PMTYPE		DCM	When PMTYPE is DCM, you must enter subfields DCMNO, DCMCKTNO and DCMCKTTS.
	DCMNO	0-511	Digital carrier module number

Datafilling table TOPSHDLC

Field	Subfield or refinement	Entry	Explanation and action
	DCMCKTNO	0	Digital carrier module circuit number
	DCMCKTTS	1	Digital carrier module time slot

Datafill example for table TOPSHDLC

Sample datafill for table TOPSHDLC appears in the following example.

MAP example for table TOPSHDLC

```
DLGRP   EXTRKNM          DLDCMVAR
_____________________________________________________________________
HOSTDL   1               DCM  0 0 1
HOSTDL   2               DCM  1 0 1
```

You must enter additional data links to the closedown host switch. See the following figure for example datafill.

MAP example for table TOPSHDLC (Closedown)

```
DLGRP       EXTRKNM          DLDCMVAR
_____________________________________________________________________
NCHOSTDL    3               DCM  0 0 1
NCHOSTDL    4               DCM  1 0 1
```

Datafilling table OCOFC

Table Operator Centralization Office (OCOFC) matches an office name to a numeric. Table OFCNAME can be a key for Table OCGRP. You must enter each OC office name in this table before other tables can reference the office names. Specify office names at the other end of the OC links. In the remote switch, specify the host switch name.

Datafill example for table OCOFC

Sample datafill for table OCOFC appears in the following example.

TOPS Close Down (continued)

MAP example for table OCOFC

```
VALUE       SYMBOL
_____________________________________________________________
1           HOSTOFFICE
```

You must enter the closedown host switch name for remote switches that use a closedown host switch. Refer to the following figure for example datafill.

MAP example for table OCOFC (Closedown)

```
VALUE       SYMBOL
_____________________________________________________________
2           NCHOSTOFFICE
```

Datafilling table OCGRP

Table OCGRP identifies the voice and data link groups that connect to the offices in table OCOFC. Table OCGRP indicates if the connected office is a host or remote. In a remote switch, specify the office type as host. For example, specify the names of the host switches and associated links.

Datafill for TOPS Close Down for table OCGRP appears in the following table. The fields that apply to TOPS Close Down appear in the table. See the data schema section of this document for a description of the other fields.

Datafilling table OCGRP

Field	Subfield or refinement	Entry	Explanation and action
BCSLEVEL		numeric	In BCS32, feature package Host/Remote Networking by Queue Type added field BCSLEVEL. If this package is present, refer to this package description for upgrade procedures. Incorrect entry of data in field BCSLEVEL can cause outage.

Datafill example for table OCGRP

Sample datafill for table OCGRP appears in the following example.

MAP example for table OCGRP

```
OFFICE       OFCTYPE  VLGRP              DLOVRLAY  BCSLEVEL
_____________________________________________________________
HOSTOFFICE   HOST     HOSTVLIC HDLC      HOSTDL    33
```

You must enter the following for remote switches that use a closedown host switch:

- closedown host switch name
- associated voice link groups
- associated data link groups

Refer to the following figure for example datafill.

MAP example for table OCGRP (Closedown)

```
OFFICE           OFTYPE      VLGRP                 DLOVRLAY
_____________________________________________________________
NCHOSTOFFICE     HOST        NC HOSTVLIC HDLC      NCHOSTDL
```

Datafilling table OCHOST

The remote switch requires table Operator Centralization Host (OCHOST).

Datafill for TOPS Close Down for table OCHOST appears in the following table. The fields that apply to TOPS Close Down appear in this table. See the data schema section of this document for a description of the other fields.

Datafilling table OCHOST

Field	Subfield or refinement	Entry	Explanation and action
HOSTOFC		alphanumeric	Datafill the CLLI name of the host switch that table OCOFC specifies.

Datafill example for table OCHOST

Sample datafill for table OCHOST appears in the following example.

TOPS Close Down (continued)

MAP example for table OCHOST

```
OFFICETYPE  HOSTOFC
_____________________________________________________________________
HOST        HOSTOFFICE
```

Datafilling table VLMEM

Table Voice Link Member (VLMEM) maps voice link terminations between OC-equipped switches. Table VLMEM associates an office with the separate voice links in the voice link group. The VLGRP CLLI must correspond to table CLLI. These entries can appear in any order.

Datafill example for table VLMEM

Sample datafill for table VLMEM appears in the following example.

MAP example for table VLMEM

```
VLKEY       VLGRP  VLEXTRK
_____________________________________________________________________
HOSTOFFICE   0    HOSTVLIC     3701
HOSTOFFICE   1    HOSTVLIC     3702
HOSTOFFICE   2    HOSTVLIC     3703
```

For remote switches that must use a closedown host switch, you must enter additional voice links to the closedown host switches. See the following figure for example datafill.

MAP example for table VLMEM (Closedown)

```
VLKEY       VLGRP  VLEXTRK
_____________________________________________________________________
NCHOSTOFFICE   3    NCHOSTVLIC     3701
NCHOSTOFFICE   4    NCHOSTVLIC     3702
NCHOSTOFFICE   5    NCHOSTVLIC     3703
```

Datafilling table TOPSPOS

Datafill for TOPS Close Down for table TOPSPOS appears in the following table. The fields that apply to TOPS Close Down appear in this table. See the data schema section of this document for a description of the other fields.

Datafilling table TOPSPOSs

Field	Subfield or refinement	Entry	Explanation and action
POSNO		numeric	Position number.
		(0 to 9999)	In a TOPS OC network, operator positions that provide directory assistance (DA) or intercept services must have separate position numbers. This requirement applies across the network and to all software releases. Position numbers must be different between the host and the remotes of the host. Position numbers must be different between remotes off the same host.

Datafill example for table TOPSPOS

Sample datafill for table VLMEM appears in the following example.

MAP example for table TOPSPOS

```
POSNO      VCCKT        VCPDGRP     CARDCODE
  DATAPATH
      POSAREA
_____________________________________________________________

100        TM8 0 24     NPDGRP      2X72AA
  DMODEM SP ASCII TM8 0 25 NPDGRP BELL108
     OPR 1 TOPSACD TASERV $ GEN XFR1 $
```

Tools for verifying translations

The TOPS Close Down does not use tools for verifying translations.

SERVORD

The TOPS Close Down does not use SERVORD.

TOPS DA Subtending TMS

Ordering codes

Functional group ordering code: OSB00101

Functionality ordering code: not applicable

Release applicability

BCS35 and up

Prerequisites

To operate, TOPS DA Subtending TMS has the following prerequisites:

- BAS Generic, BAS00003
- Table TOPSFTR parameter TOPS_ON_OFF_SWITCH = Y

Description

This functionality is provided by the following features:

Feature number	Feature name
AF2395	Dedicated DA Subtending TMS
AF1687	TPC/MP Datafill for TMS
AF1728	TMS Static Data (CC)
AF1652	TMS Maintenance Hooks (CC)
AF2394	TMS DA/ORDB Product Verification
BK00349	Base Changes to Table TDCDEF
BK03287	TPCs Allocating More Memory Than Needed (BCS35)

This functionality contains the following:

- New TMS data link assignment rules for both BCS30 TMS applications: TOPS MP with CCI DA and TOPS MPX with IBM DA.
- New BCS31 application TOPS MP with IBM DA.
- Dedicated DA service for handling both Directory Assistance and Intercept calls.

Operation

The TOPS Message Switch (TMS) provides a new architecture for interfacing the TOPS MP Operator Positions and external databases, such as DA and

TOPS DA Subtending TMS (continued)

ORDB. It reduces AWT of operator handled calls and replaces the low-speed data circuit interface via DTC/MTM and digital modem.

The TMS is a data communications, link concentration and switching subsystem for the TOPS MP/MPX system. The TMS is based upon the XMS-based Peripheral Module (XPM) Line Trunk Controller Integrated Services Digital Network (LTCI). It provides high speed message communication through use of 1980 version X25 link, for TOPS MP positions to reach databases such as the CGI Operator Reference Database (ORDB), CCI Directory Assistance (DA), IBM DA, and DMS Central Control (CC). TMS eliminates the need for direct data links between TPCs and database systems.

TMS is also required to provide voice and data link communication between the DMS-200 and MPX Operator Positions.

The TMS interfaces the network via four to six duplicated DS30 links.

TMS interfaces to a TPC via a DS1 link and a channel bank. Each DS1 link can support up to four TPCs. Each TPC can support up to four MPs. There are 24 channels per DS1. Each TPC utilizes four voice channels (one per MP) and two data channels.

TMS interfaces to DA and ORDB via DS0 channels through a channel bank. This allows for flexibility of link configuration. Therefore, the TMS can be configured to have various numbers of TPCs or databases connected, based on the Operating Company's requirements.

The TPC can be configured as Toll and Assistant (TA) only, TA and ORDB, TA and DA, and TA and both ORDB/DA. The TMS can support up to 24 TPCs. Refer to the TMS SEB for site specific TMS capacity calculations.

Package TOPS Increased Multiplexing (TIM), OSB00101, contains BCS35 TOPS base code changes for tables PVCTYPE, TMSPVC, and TDCDEF. Therefore, these table changes are present in BCS35 whether package TIM is present or not. Table PVCTYPE is new and tables TMSPVC and TDCDEF are used in package TOPS DA Subtending TMS, OSB00101. TOPS base changes to tables TMSPVC and TDCDEF do not require changes to this TMS package datafill for continued operation of 4 position cluster sizes on a TMS.

Refer to SEB 93-003-02 to verify that the message rate is not exceeded. Otherwise, a message overload can cause outage service degradation.

TOPS DA Subtending TMS (continued)

Specifically, the TMS provides the following functionality:

- Link switching/concentration

  The TMS connects Permanent Virtual Circuits (PVCs, logically multiplexed on DS0 channels), and routes messages between connected PVCs. This capability allows for facilities savings since direct data links between TPCs and database systems are not required

- CC messaging/X.25 protocol conversion

  The TMS converts between the XPM-CC messaging protocol used over DS-30 links through the DMS network and X.25 used over DS0 (56 Kbps) data links to the TPC.

- High-speed CC-TPC communications

  One or two 56 Kbps data links between the TMS and each TPC are utilized instead of four low-speed modem links per TPC. This increases messaging throughput between the CC and TPC. When two data links are used one link is active and the other is on warm standby.

- X.25 implementation

  The X.25 protocol per the CCITT 1980 specification is used for communications between the TMS and all nodes subtending the TMS (including the TPC and the service nodes). The TMS X.25 implementation employs PVCs only.

- X.25 protocol parameters

  The TMS provides three sets of protocol parameters. A set of parameters is user-assignable on a per-link basis.

- Network coordination

  In this context, the term `network coordination' refers to the TMS implementation of X.25 Data Circuit-Terminating Equipment functions in handling link and PVC startups and resets. For nodes connected through the TMS, the TMS notifies the local node when a DS0 or PVC to the far-end node goes up or down. The TMS functions as a Data Circuit Equipment (DCE). All nodes connected through the TMS function as Data Terminating Equipment (DTE).

The TMS configuration is shown in the following exhibit:

TOPS DA Subtending TMS (continued)

TMS configuration

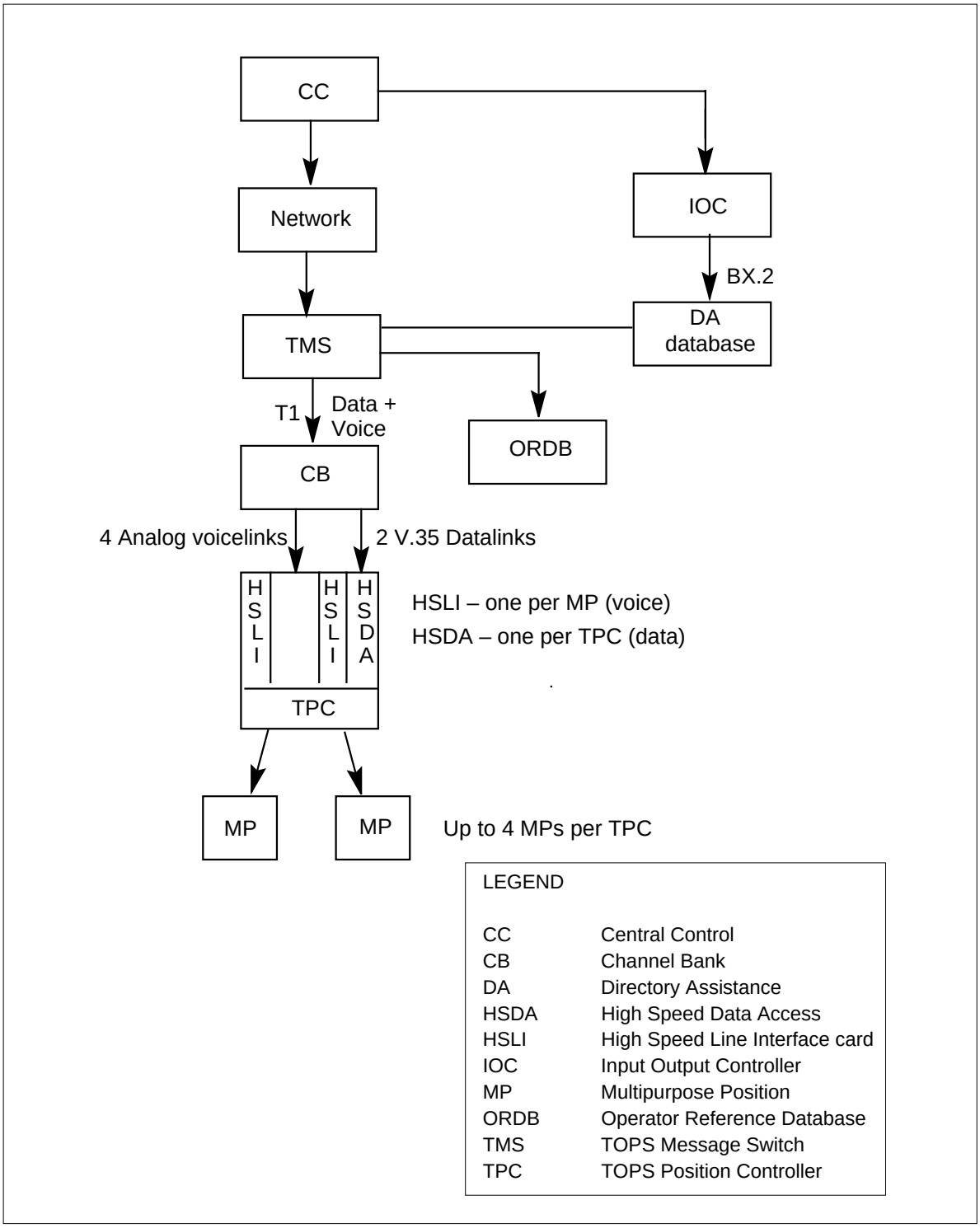

TOPS DA Subtending TMS (continued)

CCI DAS with TOPS MP

Supports both DA and ORDB database connections through the TMS. The TPC Administration and Maintenance Interface (TAMI) inputs/modifies the TPC datafill required for TOPS MP DA service. Hardkey, position, OGT key, protocol parameter, and service definitions are made via the TAMI. TOPS MP can provide both TA and DA service.

IBM DAS with MPX

Supports direct connection from the MPX to the DA database (not through the TMS). ORDB interface is not supported. Key and position definitions and screen options are set via the DEFKEY, DEFPOS, DEFOPT and DEFSCR utilities in the MPX position itself.

IBM DAS with TOPS MP

Supports both DA and ORDB database connections through the TMS. The Terminal Emulation Gateway (TEG) interfaces TOPS MP positions to IBM DA. The TEG defines keys and set options via DEFKEY and DEFOPT utilities. DEFCMD defines operator privileges, and DEFSTA defines status messages. DEFSCR utility is not supported for TOPS MP.

The required system resources for this product are:

- An equipped TMS, including DS1 and DCH cards
- TMS software package
- TPCs
- Data Service Units (DSUs)
- Channel banks
- Optional DA/ORDB vendors' software package

AF2395 - Dedicated DA Subtending TMS

TOPS Dedicated DA service provides handling for both Directory Assistance and Intercept calls. Throughout this feature section, DA refers to both Directory Assistance and Intercept calls.

The terminal used for providing the dedicated DA service is a TOPS Basic Position (BP). The TOPS BP terminal is linked to the DMS via the TMS. TOPS BP linked via the TMS is a hybrid configuration derived from combining aspects of both the TOPS Multipurpose (MP) DA system and the Two Terminal DA system. For more information, refer to feature AF2018 in , TOPS Two Terminal DA/Intercept, OSB00101.

TOPS DA Subtending TMS (continued)

TOPS MP DA service

Directory Assistance (DA) service using TOPS MP terminals provides a single terminal solution for handling DA calls. When presented with a call the operator can obtain the necessary billing information and then perform the requested database search at the same terminal.

When the TOPS MP terminal is subtending a TMS, several advantages are gained. The need for digital modems disappears. The result is a faster communication interface between the terminal and the DMS.

There is a datalink interface from each terminal to the DA System (DAS) database. The datalink is configured through the TMS. The configuration allows the concentration of data facilities to the DAS.

TOPS DA Subtending TMS (continued)

System configuration for two terminal DA

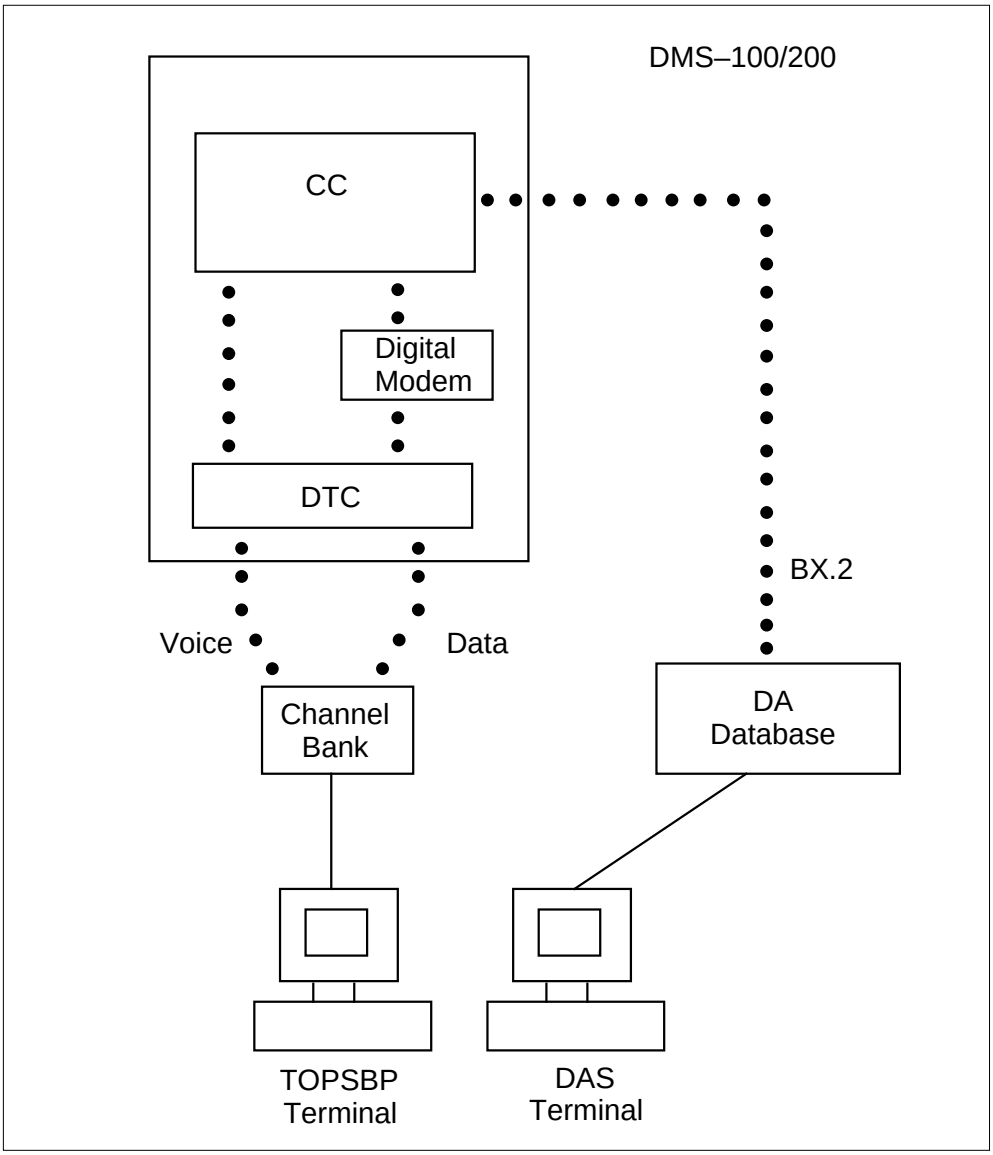

Two terminal DA service

This type of DA service offers a two terminal solution for directory assistance. The operator has two terminals. The first terminal (TOPS BP) is connected to the DMS. The call is presented to this terminal. The operator obtains any missing information pertaining to billing and enters it at the TOPS BP. The operator then uses the second terminal (DAS terminal) to retrieve the requested information for the subscriber.

TOPS DA Subtending TMS (continued)

The configuration of the TOPS BP terminal requires a digital modem for data transmission. The TMS cannot be used. The consequences of using the digital modem are much slower transmission speed which result in slower response time at the terminal.

The advantage to this configuration is the direct link to the DAS database from the DAS terminal. This direct link provides a decrease in response time for database searches.

DA terminal subtending TMS

The dedicated DA terminal described by this feature combines the advantages of TMS with the advantages of Two Terminal DA service. The result is high speed DMS to terminal data communication coupled with direct DAS database access.

The dedicated DA terminal must emulate the TOPS MP terminal. A TPC is required for every four DA terminals. The TPC is required to perform maintenance. It is also required to manage messaging between the DMS and the DA terminals. With concentrated datalinks, the TPC functions as a demultiplexer. It is responsible for taking messages off the datalink and routing them to the appropriate DA terminal. The TPC functions as a multiplexer when routing messages from the DA terminal to the datalink.

DA terminal functionality

A dedicated DA terminal can provide one of three types of functionality:

- General Position
- Service Assistant Position
- In-Charge Position

DA terminals functioning as general DA positions handle calls originated by subscribers. These terminals provide the call processing functions.

DA terminals functioning as DA service assistants do not receive calls originated by subscribers. Calls handled by a service assistant are sent by general operators or other service assistants. Service assistants can page and monitor general operators. The service assistant also receives selected force and queuing statistics.

DA terminals functioning as in-charge positions possess all of the functionality of the service assistant. In addition, the in-charge position receives a more extensive set of force and queuing statistics.

TOPS DA Subtending TMS (continued)

A Force Management CRT (FMCRT) is a TOPS device used to monitor force and queuing statistics. This device uses a TOPS terminal for display purposes only. Since the AOSS protocol does not support the FMCRT, a dedicated DA terminal cannot be used as an FMCRT. Either a TOPS MP or a TOPS Single Purpose position must be used as the FMCRT.

TPC and terminal maintenance

In a TMS system, maintenance messaging occurs between the CC and the TPC. The TPC and DA terminal can be posted, busied and returned to service from the DMS MAP. The DA terminal can be tested from the MAP. For more information on TPC maintenance see AF1992: Integrated TPC Maintenance. For more information on DA terminal maintenance see AF1727: Integrated MP Maintenance.

DA database link configuration

Links from the DA terminal to the DA Database are configured from the DA terminal and/or the TPC. Direct database access provides faster communication between the nodes.

Links from the DA terminal to the DA Database can also be configured through the TMS. The TMS maps the datalink to the PVC for DA communication. The TMS is transparent to the link selection mechanism provided by the DA interface protocol.

DA terminal configuration

The following figure gives an illustration of one possible hardware arrangement.

Also in this figure, the dedicated DA terminal is shown as having a direct datalink to the Directory Assistance System (DAS) database.

The actual configuration of the TPC and the four DA terminals is dependent upon the manufacturer of the terminals. As long as the DMS sees a TPC and four DA terminals subtending the TPC, then the actual configuration is irrelevant.

TMS PVC Assignments

As described earlier, routing messages to and from the DA terminal is accomplished using PVC's. The TMS requires PVC's to be dedicated to a specified function. The TPC must associate messages incoming over a specific PVC with that PVC's predefined destination. The TPC must also place messages from a particular entity over that entity's dedicated PVC for processing by the DMS. The PVC assignments are the same on both datalinks incoming from the DMS. The following table illustrates the PVC assignments:

TOPS DA Subtending TMS (continued)

System Configuration

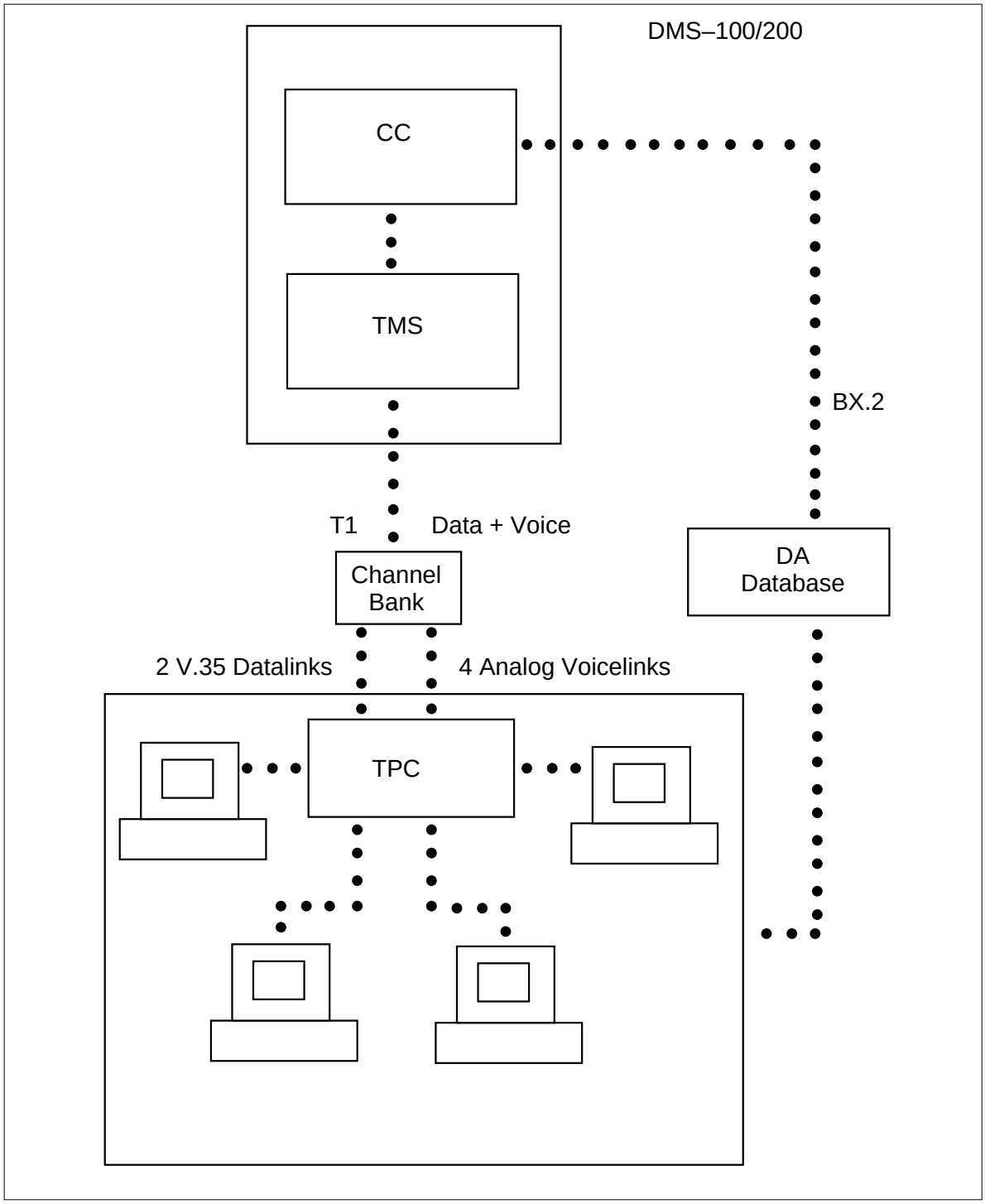

TOPS DA Subtending TMS (continued)

TPC PVC Assignments

Destination	Use	PVC
Maintenance	DA Datalink	1
Maintenance	ORDB	6
Maintenance	CC Datalink	11
DA Terminal 0	DA Datalink	2
DA Terminal 0	ORDB	7
DA Terminal 0	CC Datalink	12
DA Terminal 1	DA Datalink	3
DA Terminal 1	ORDB	8
DA Terminal 1	CC Datalink	13
DA Terminal 2	DA Datalink	4
DA Terminal 2	ORDB	9
DA Terminal 2	CC Datalink	14
DA Terminal 3	DA Datalink	5
DA Terminal 3	ORDB	10
DA Terminal 3	CC Datalink	15

Note 1: The DA Datalink from the DA Terminal to the DA Database can optionally be configured through the TMS. If it is not configured through the TMS, then the PVC assignment for the DA datalink is not required.

Note 2: The Operator Reference Database (ORDB) is a database containing information needed by the operator when processing a call. An example of such data is a list of all the localities serviced by a particular DA vendor. The ORDB link from the DA Terminal to the ORDB can optionally be configured through the TMS. If it is not configured through the TMS, then the PVC assignment for the ORDB link is not required.

Datafill

The dedicated DA terminal is defined in table TOPSPOS.

TOPS DA Subtending TMS (continued)

BK00349 - Dynamic updating for tables TPCINV and TMSPSDEV

This PRSDOC allows an Operating Company to provision TPCs, DA and ORDB databases on an as needed basis without a service interruption. This capability allows dynamic updating in an INSV TMS for:

- TPCs added or deleted from table TPCINV
- DA and ORDB databases added or deleted from table TMSPSDEV

Prior to this PRSDOC, all TMS specific table information was static in tables TPCINV and TMSPSDEV. There was no method available of updating an INSV TMS with changes in tables TPCINV and TMSPSDEV without a service interruption.

BK03287 - TPCs allocating more TMS memory than needed (BCS35)

This feature enhances the CC with the ability to restrict (through CC datafill) the existing TOPS Message Switch (TMS) limitation of handling a maximum of 96 Operator Positions. This limitation has always existed in the TMS, but has not enforced in the CC.

Enhanced table TPCINV

Table TPCINV is enhanced with new field CLUSTRSZ. This field is datafilled with the maximum number of Operator Positions that are controlled by the TPC. Since each TPC is datafilled against a TMS, this field keeps track of the number of Operator Positions that are datafilled against the TMS.

By using this new field, a running total is tracked and when the addition of another TPC causes the limit of 96 to be exceeded, a WARNING message displays at the MAP, indicating that the limitation has been violated.

In order to change the value of this new field, the tuple must be deleted and re-added.

When feature AF3003 TOPS Increased Multiplexing, OSB00101,, is present, the new field CLUSTRSZ can be datafilled with a value up to twenty (20). Without this feature, CLUSTRSZ can be datafilled with a value no greater than four (4).

The following example shows a TPCINV tuple with the new field CLUSTRSZ.

TOPS DA Subtending TMS (continued)

MAP display example for table TPCINV

```
TPCNAME FRTYPE FRNO SHPOS FLOOR ROW FRPOS LOAD
TMSNO TMSCKTNO TMSCKTTS TPCTYPE RTSTIMR CLUSTRSZ
_____________________________________________
TPC    0   PCE    0      0    0  AA     0   XX
   0        0   (1)(2)    NT_TPC   21        4
TPC   16   PCE    0      0    1  AA     0   XX
   1        0   (1)(2)    MPX_16    1        16
TPC   20   PCE    0      0    2  AA     0   XX
   2        0   (1)(2)    MPX_20    1        20
```

Enhanced tables TOPSPOS and TOPSDEV

By cross-referencing the new field, CLUSTRSZ, in table TPCINV, these tables are restricted from datafilling field TPCPOSNO with values that violate this maximum. For example, if CLUSTRSZ for TPC 0 was datafilled as 4 in TPCINV, field TPCPOSNO in tables TOPSPOS or TOPSDEV can be datafilled with values in the range 0-3. An attempt to datafill TPCPOSNO with a value out of this range is blocked.

Also blocking occurs for the addition of a position or device that caused the number of positions subtending the TPC to exceed the datafilled cluster size (CLUSTRSZ).

QUERYPM command display at TPC MAP level

When the QUERYPM command is executed at the TPC level of the MAP, the CLUSTRSZ field determines how many positions are subtending or can subtend the TPC and this is the number of MPs that are displayed. Each MP is displayed showing whether it is datafilled (i.e., as an Operator Position or a device) or not (i.e., “Uneq"). If no MPs are datafilled against the TPC, this is stated.

TMS Configurations

Each TMS has 2 shelves, TMS 0 and TMS 1. Each shelf has 24 circuit pack slots. For a TMS, circuit packs from slot 8 to 24 on both shelves are redundant; from slot 1 to 5 on both shelves are available for either DS1 or DCH circuit packs. A TMS can have a maximum of 4 DCHs installed.

Note: Each DS1 circuit pack provides 2 DS1 ports.

TOPS DA Subtending TMS (continued)

TMS configuration

Slot No.	Shelf TMS 0	Shelf TMS 1
1	DS1 or DCH	DS1 or DCH
2	DS1 or DCH	DS1 or DCH
3	DS1 or DCH	DS1 or DCH
4	DS1 or DCH	DS1 or DCH
5	DS1 or DCH	DS1 or DCH
6	Filler	Filler
7	Filler	Filler
8	MP NT6X45BA	MP NT6X45BA
9	MP MEM NT6X47AB	MP MEM NT6X47AB
10	MP MEM NT6X47AB	MP MEM NT6X47AB
11	SP MEM NT6X46BA	SP MEM NT6X46BA
12	SP NT6X45BA	SP NT6X46BA
13	Filler	Filler
14	TS NT6X44AA	TS NT6X44AA
15	Filler	Filler
16	ISP NTBX01AA	ISP NTBX01AA
17	Filler	Filler
18	M/T card NT6X69AB	M/T card NT6X69AB
19	Filler	Filler
20	CSM NT6X42AA	CSM NT6X42AA
21	Formatter NT6X41AA	Formatter NT6X41AA
22	DS30 NT6X40AC/CA	DS30 NT6X40AC/CA
23	Filler	Filler
24	Filler	Filler

A fully equipped TMS can support 96 operators or 24 TPCs with various databases (DA, ORDB or DA/ORDB) attached. The following lists the system resources for this TMS configuration:

```
Number of TPCs              24
Number of DSUs              48
Number of Channel Banks      6
Number of TMSs               1
Number of DCHs               4
Number of DS1 cards          5 (with DNX available) or
                             6 (without DNX)
```

Three DS1 cards for TPC, one DS1 card for inter-DCH communication, and two DS1 cards for database are recommended to maintain maximum system reliability.

TOPS DA Subtending TMS (continued)

For the office that needs more than 96 operators, a Multiple-TMS configuration can be provisioned, and the only attention is on the DS1 channels datafill for the added TMSs. Please see the details in Section 5.0.

TMS Card Layout and TPC assignments

TMS module shelf and card layout identifying circuit number (ckt#):

shelf 1										
ckt#	19	18	15	14	11	10	7	6	3	2
shelf 0										
ckt#	17	16	13	12	9	8	5	4	1	0
cp slot	1		2		3		4		5	

The numbers under TPC show the recommended order in which TPCs are added to the TMS. This spreads them across the DS1s evenly:

96 position TMS card assignments
(database access on separate DS1 ckt)

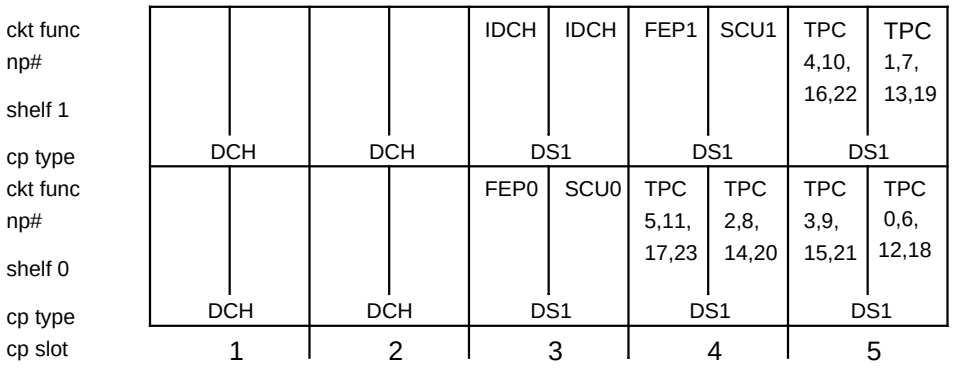

OR

96 position TMS card assignments
(database access on same DS1 ckt)

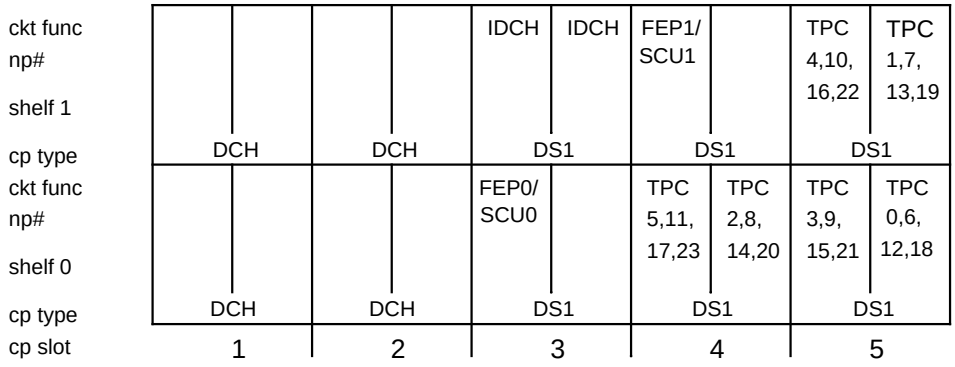

Connectivity

In the 96 operator configuration, the TPCs are divided conceptually into four groups. Each TPC group has 6 TPCs or 24 operators associated with it. There are 4 DCHs per TMS and each DCH is associated with a TPC group. Each DCH has 6 TPC links from the same TPC group and 2 TPC links from each of the other 3 TPC groups. Overall, there are 12 TPC links (48 operators) connected to a DCH.

TOPS DA Subtending TMS (continued)

Using the recommended datafill described here, the TPC groups associated with the first TMS are defined as follows:

PC GROUP A	TPC GROUP B	TPC GROUP C	TPC GROUP D
0	1	2	3
4	5	6	7
8	9	10	11
12	13	14	15
16	17	18	19
20	21	22	23

The TOPS MP IBM DA application has three Terminal Emulation Gateways (TEG) per DCH, for a total of 12 TEGs per TMS. Each TEG is connected as the primary link to the IBM DAS for one of the four DCHs, and as a secondary link for one of the other three DCHs. The 12 TEGs are arranged in 6 TEG pairs - each TEG pair serves up to 16 TOPS MP positions. If a TEG fails, its mate takes over the full 16 positions.

The CCI DA can have a variable number of Subscriber Control Units (SCUs), though normally there are two, named SCU1 and SCU2. The minimum is two, since one is for backup. Each SCU has a link connected to every DCH for offices with TOPS MP and CCI DA.

The CGI ORDB has 2 Front End Processors (FEP), namely FEP1 and FEP2. FEP1 is connected to one of the four DCHs for the entire 48 operators under normal conditions. FEP2 is connected to one of the other 3 DCHs for the rest of 48 operators under normal conditions. This applies to offices with TOPS MP and ORDB.

The inter-DCH communication is provided in this 96 operators configuration to prevent any single link or node (DCH or database) failure that may cause the ORDB service outage to some operators. The inter-DCH links must use links 7 and 11 per DCH as indicated in the datafill in a later section.

TOPS DA Subtending TMS (continued)

Resources block diagram - 96 operators

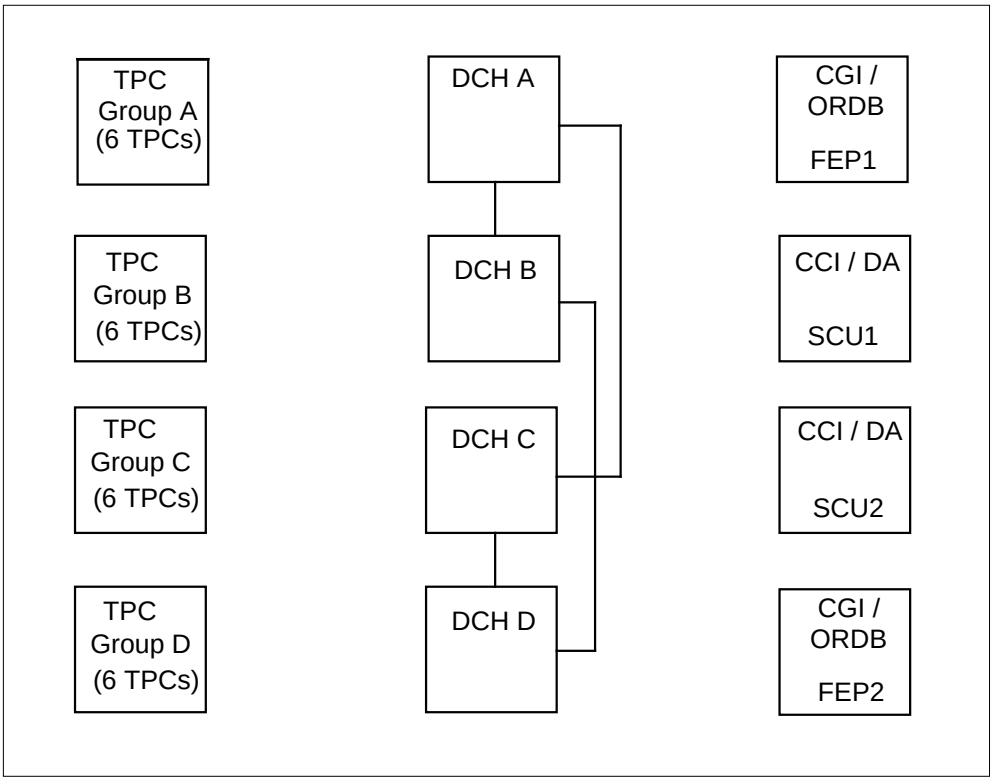

Per DCH to TPCs connection

Each DCH has 6 TPC primary links from the same group and 2 TPC secondary links from each of the other 3 TPC groups as depicted in the following figure.

TOPS DA Subtending TMS (continued)

Per DCH to TPCs - 96 operators

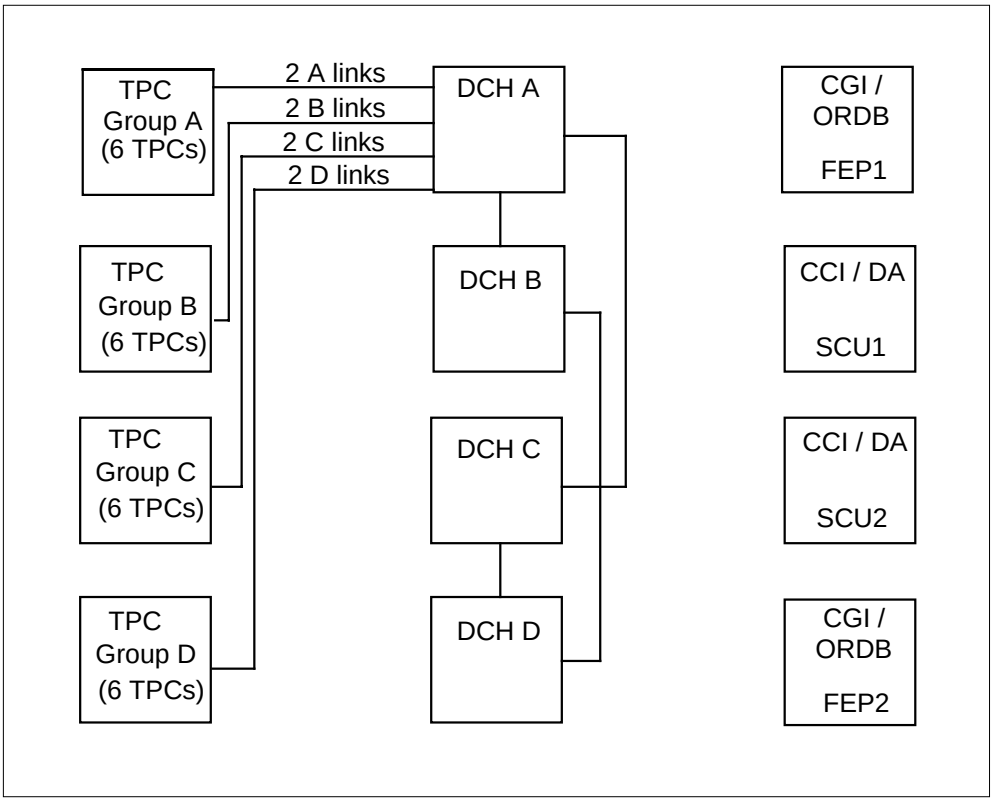

Note: Links refer to DS0 link.

Per TPC to DCHs connection

There are 2 data links per TPC, namely primary and secondary links. The 6 TPC primary links are connected to the DCH of that group. Every 2 TPC secondary links of this group are connected to every other DCH.

TOPS DA Subtending TMS (continued)

Per TPC to DCHs - 96 operators

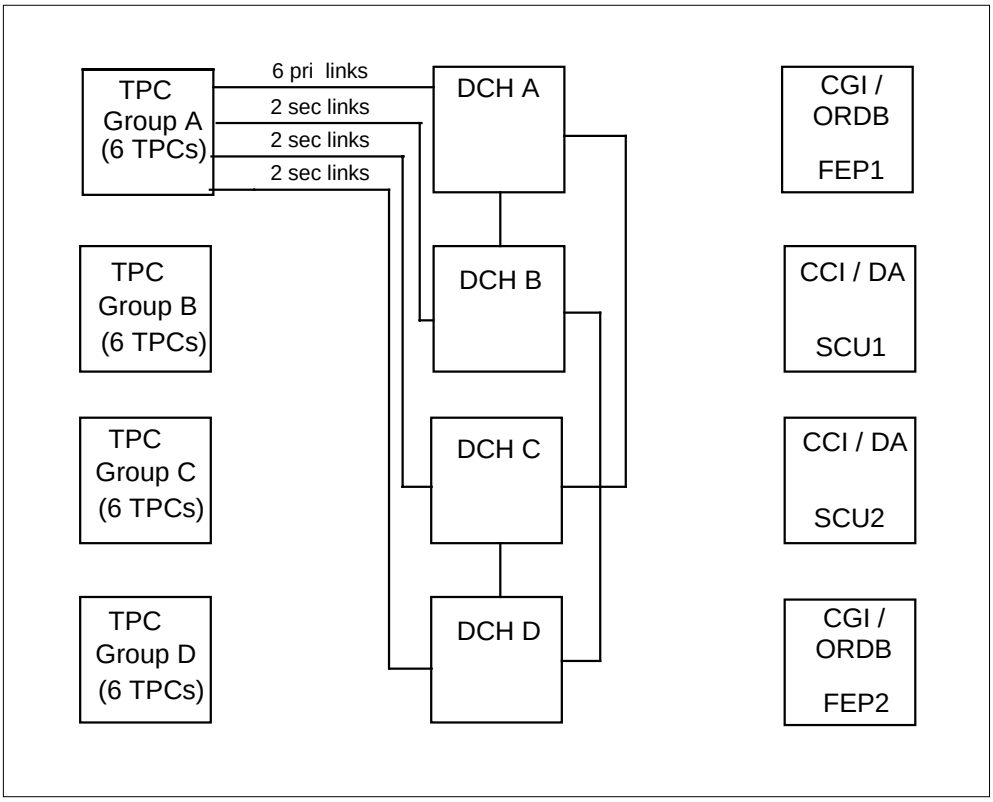

Note: Links refer to DS0 link.

CCI DA to DCHs connection

Each of the two CCI DA SCUs has 4 links. Each link is connected to a DCH, and the other SCU has the same topology for redundancy.

Note: MPX positions do not connect to IBM DA through TMS.

TOPS DA Subtending TMS (continued)

DCHs to CCI DA - 96 operators

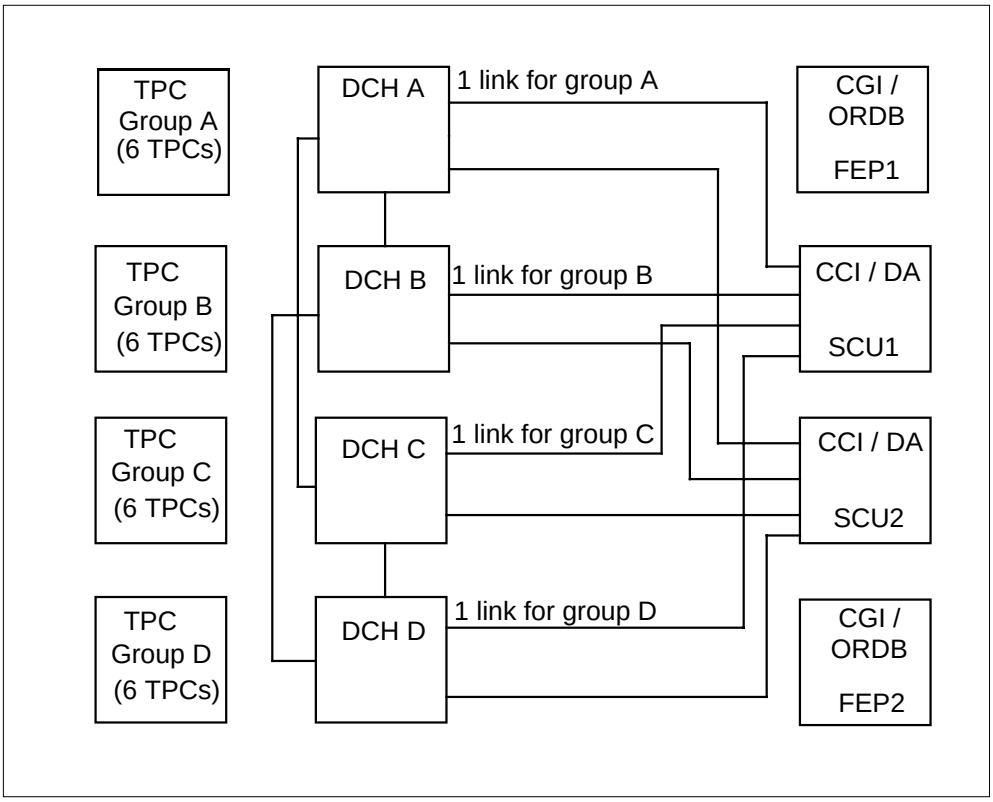

Note: Links refer to DS0 link.

IBM DA to DCHs connection

The TEG provides the interface that facilitates connection of TOPS MP terminals to IBM DAS. System administration, terminal display and field update functions are performed at the TEG.

There are a total of 12 IBM TEGs connected per TMS. Each TEG is connected to a DCH, and there are four DCHs per TMS; therefore, there are three TEGs per DCH. Each TEG is paired with one other TEG. The TEGs in a pair complement each other, each being connected as the primary DA link for their own pair of TPCs while being connected as the secondary DA link for the other TEG's pair of TPCs. For example, if TEG1 and TEG4 were a pair, and TEG1 was the primary DA link for TPC pair A, and the secondary DA link for TPC pair B, then TEG4 is connected as the primary DA link for TPC pair B and the secondary DA link for TPC pair A.

The three TEGs that are connected to a particular DCH are each paired with TEGs that are connected to other DCHs, none of which are connected to the

TOPS DA Subtending TMS (continued)

same DCH. The result is a redundancy scheme that ensures that the load is evenly distributed over the three remaining DCHs should one of the DCHs fail.

TEGs must be paired as indicated by the following two figures.

TEG pairings for IBM DA

TEG			Mate TEG		
TEG NO	DCH	LINK	TEG NO	DCH	LINK
1	0	17	4	1	17
2	0	18	7	2	17
3	0	31	10	3	17
4	1	17	1	0	17
5	1	18	8	2	18
6	1	31	11	3	18
7	2	17	2	0	18
8	2	18	5	1	18
9	2	31	12	3	31
10	3	17	3	0	31
11	3	18	6	1	31
12	3	31	9	2	31

TOPS DA Subtending TMS (continued)

DCHs to IBM DA - 96 operators

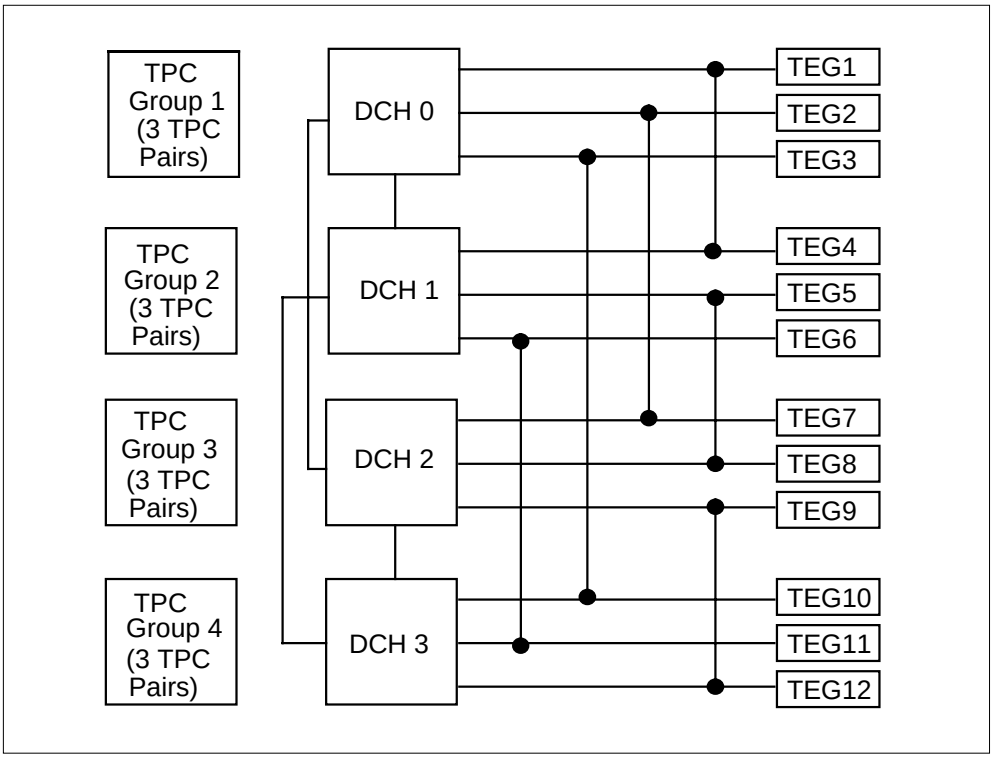

Note: Links refer to DS0 link.

CGI ORDB to DCHs connection

FEP1 is connected to DCH A for the entire 48 operators under normal conditions. FEP2 is connected to DCH D for the other 48 operators under normal conditions. When one ORDB link fails, the other ORDB link takes over for the entire 96 operators.

Note: MPX positions do not support connection to ORDB.

DCHs to CGI ORDB - 96 operators

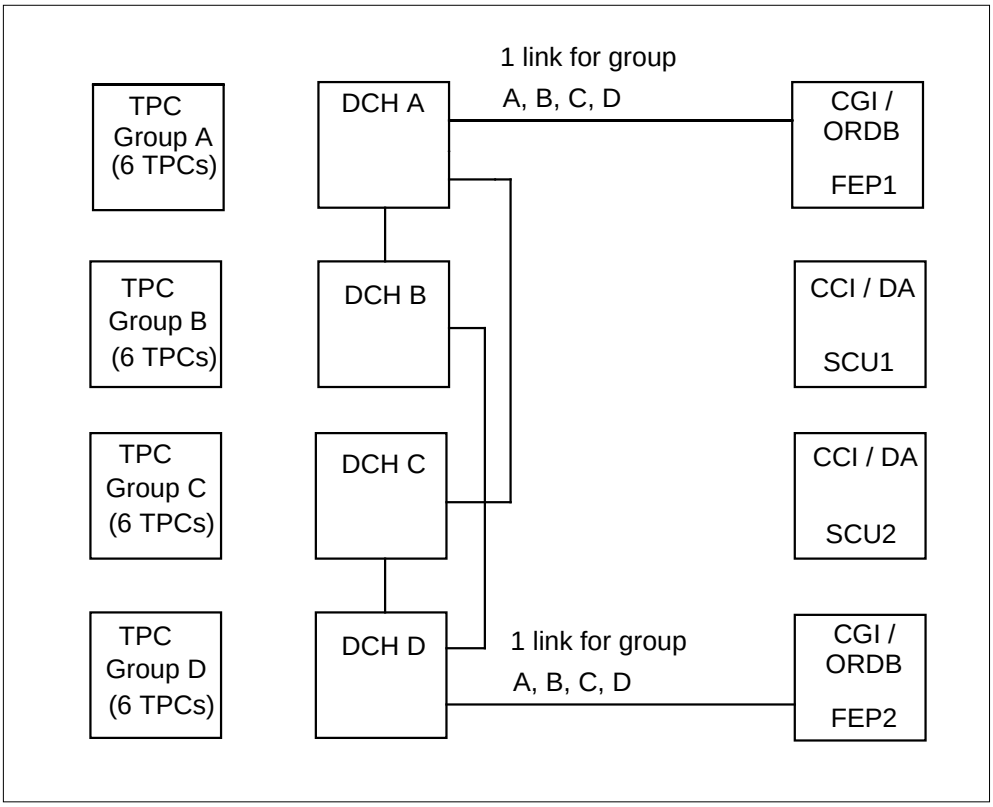

LInk/PVCs configuration

The following sections contain the information of the link and PVC configuration, the DCH routing, DS1 channel special connection, etc. This information must be conveyed in the CC datafill tables.

The link/PVC tables, as shown in the following 5 figures (A-E), provide the DCH routing information in a handy format for trouble detection and other purposes.

> ***Note:*** Figures A-C should be used to map the DS1 to DCH channel assignments in table SPECCONN. For each physical TPC number in table TPCINV, map the DS0 data channel to the corresponding DCH No. and DCHCHNL No. in figure C (for TOPS MP CCI DA or TOPS MPX IBM DA) or in figure D (for TOPS MP IBM DA).

PHYSICAL TPC NUMBER:

The external number assigned to each TPC in table TPCINV field TPCNAME. The physical TPC number is assigned by the Operating Company. The

TOPS DA Subtending TMS (continued)

physical TPC number is also used in table TOPSPOS. Physical TPC numbers can range from 0 to 254.

LOGICAL TPC NUMBER:

The internal identifier used in the TMS routing tables. The logical TPC number is assigned in table TMSPVC and cannot be changed by the Operating Company. It is used in all TMS related tables EXCEPT TPCINV and TOPSPOS. Logical TPC numbers range from 0 to 23.

The relationship between the physical TPC number and logical TPC number is shown in figure E as it applies to the recommended datafill in this module.

TPC DCH Link and PVC Configuration for SPECCONN: TOPS MP CCI DA and TOPS MPX IBM DA

TOPS DA Subtending TMS (continued)

A: TPC DCH Link and PVC Configuration for Datafilling SPECCONN

Physical TPC No.	Logical TPC No.	TPC Link 0 (Primary) DCH No.	TPC Link 0 (Primary) DCHCHNL No.	TPC Link 1 (Secondary) DCH No.	TPC Link 1 (Secondary) DCHCHNL No.
0	0	0	1	1	14
1	6	1	1	0	14
2	12	2	1	0	18
3	18	3	1	0	22
4	1	0	5	2	14
5	7	1	5	2	18
6	13	2	5	1	18
7	19	3	5	1	22
8	2	0	9	3	14
9	8	1	9	3	18
10	14	2	9	3	22
11	20	3	9	2	22
12	3	0	2	1	13
13	9	1	2	0	13
14	15	2	2	0	17
15	21	3	2	0	21
16	4	0	6	2	13
17	10	1	6	2	17
18	16	2	6	1	17
19	22	3	6	1	21
20	5	0	10	3	13
21	11	1	10	3	17
22	17	2	10	3	21
23	23	3	10	2	21

Note: Physical TPC numbers are assigned by the Operating Company. The above figure shows the recommended physical TPC number assignments for the first TMS in the office. Physical TPC numbers range from 0 to 254 and a unique number must be assigned to each TPC. Logical TPC numbers range from 0 to 23. The SPECCONN assignment pattern is repeated for each TMS in the office. Use DCH 4-7 for TMS 1, DCH 8-11 for TMS2, etc.

TPC DCH Link and PVC Configuration for SPECCONN: TOPS MP IBM

TOPS DA Subtending TMS (continued)

B: TPC DCH Link and PVC Configuration for Datafilling SPECCONN

Physical TPC No.	Logical TPC No.	TPC Link 0 (Primary) DCH No.	TPC Link 0 (Primary) DCHCHNL No.	TPC Link 1 (Secondary) DCH No.	TPC Link 1 (Secondary) DCHCHNL No.
0	0	0	1	1	9
1	6	1	1	0	9
2	12	2	1	0	10
3	18	3	1	0	23
4	1	0	5	1	13
5	7	1	5	0	13
6	13	2	5	0	14
7	19	3	5	0	27
8	2	0	2	2	9
9	8	1	2	2	10
10	14	2	2	1	10
11	20	3	2	1	23
12	3	0	6	2	13
13	9	1	6	2	14
14	15	2	6	1	14
15	21	3	6	1	27
16	4	0	15	3	9
17	10	1	15	3	10
18	16	2	15	3	23
19	22	3	15	2	23
20	5	0	19	3	13
21	11	1	19	3	14
22	17	2	19	3	27
23	23	3	19	2	27

Note: Physical TPC numbers are assigned by the Operating Company. The above figure shows the recommended physical TPC number assignments for the first TMS in the office. Physical TPC numbers range from 0 to 254 and a unique number must be assigned to each TPC. Logical TPC numbers range from 0 to 23. The SPECCONN assignment pattern is repeated for each TMS in the office. Use DCH 4-7 for TMS 1, DCH 8-11 for TMS2, etc.

TOPS DA Subtending TMS (continued)

C: TMS DA Link and PVC Configuration for TOPS MP CCI DA

		SCU1			SCU2		
Physical TPC No.	Logical TPC No.	DCH No.	DCHCHNL No.	PVC Range	DCH No.	DCHCHNL No.	PVC Range
0	0	0	25	1–4	1	26	13–16
4	1	0	25	5–8	2	26	13–16
8	2	0	25	9–12	3	26	13–16
12	3	0	26	1–4	1	25	13–16
16	4	0	26	5–8	2	25	13–16
20	5	0	26	9–12	3	25	13–16
1	6	1	25	1–4	0	26	13–16
5	7	1	25	5–8	2	26	17–20
9	8	1	25	9–12	3	26	17–20
13	9	1	26	1–4	0	25	13–16
17	10	1	26	5–8	2	25	17–20
21	11	1	26	9–12	3	25	17–20
2	12	2	25	1–4	0	26	17–20
6	13	2	25	5–8	1	26	17–20
10	14	2	25	9–12	3	26	21–24
14	15	2	26	1–4	0	25	17–20
18	16	2	26	5–8	1	25	17–20
22	17	2	26	9–12	3	25	21–24
3	18	3	25	1–4	0	26	21–24
7	19	3	25	5–8	1	26	21–24
11	20	3	25	9–12	2	26	21–24
15	21	3	26	1–4	0	25	21–24
19	22	3	26	5–8	1	25	21–24
23	23	3	26	9–12	2	25	21–24

Note: Physical TPC numbers are assigned by the Operating Company. The above figure shows the recommended physical TPC number assignments for the first TMS in the office. Physical TPC numbers range from 0 to 254 and a unique number must be assigned to each TPC. Logical TPC numbers range from 0 to 23.

TMS DA Link and PVC Configuration for TOPS MP IBM DA

TOPS DA Subtending TMS (continued)

D: DCH DA Link/PVC Configuration for IBM DA - 96 operators

		Primary TEG			Secondary TEG		
Physical TPC No.	Logical TPC No.	DCH No.	DCHCHNL No.	PVC Range	DCH No.	DCHCHNL No.	PVC Range
0	0	0	17	1–4	1	17	9–12
4	1	0	17	5–8	1	17	13–16
8	2	0	18	1–4	2	17	1–4
12	3	0	18	5–8	2	17	5–8
16	4	0	31	1–4	3	17	9–12
20	5	0	31	5–8	3	17	13–16
1	6	1	17	1–4	0	17	9–12
5	7	1	17	5–8	0	17	13–16
9	8	1	18	1–4	2	18	1–4
13	9	1	18	5–8	2	18	5–8
17	10	1	31	1–4	3	18	9–12
21	11	1	31	5–8	3	18	13–16
2	12	2	17	9–12	0	18	9–12
6	13	2	17	13–16	0	18	13–16
10	14	2	18	9–12	1	18	9–12
14	15	2	18	13–16	1	18	13–16
18	16	2	31	1–4	3	31	1–4
22	17	2	31	5–8	3	31	5–8
3	18	3	17	1–4	0	31	9–12
7	19	3	17	5–8	0	31	13–16
11	20	3	18	1–4	1	31	9–12
15	21	3	18	5–8	1	31	13–16
19	22	3	31	9–12	2	31	9–12
23	23	3	31	13–16	2	31	13–16

Note: Physical TPC numbers are assigned by the Operating Company. The above figure shows the recommended physical TPC number assignments for the first TMS in the office. Physical TPC numbers range from 0 to 254 and a unique number must be assigned to each TPC. Logical TPC numbers range from 0 to 23.

TMS ORDB Link and PVC Configuration

TOPS DA Subtending TMS (continued)

E: DCH ORDB Link/PVC Configuration

		(FEP1)			(FEP2)		
Physical TPC No.	Logical TPC No.	DCH No.	DCHCHNL No.	PVC Range	DCH No.	DCHCHNL No.	PVC Range
0	0	0	3	1–5	3	3	1–5
6	1	0	3	6–10	3	3	6–10
12	2	0	3	11–15	3	3	11–15
18	3	0	3	16–20	3	3	16–20
1	4	0	3	21–25	3	3	21–25
7	5	0	3	26–30	3	3	26–30
13	6	0	3	31–35	3	3	31–35
19	7	0	3	36–40	3	3	36–40
2	8	0	3	41–45	3	3	41–45
8	9	0	3	46–50	3	3	46–50
14	10	0	3	51–55	3	3	51–55
20	11	0	3	56–60	3	3	56–60
3	12	0	3	61–65	3	3	61–65
9	13	0	3	66–70	3	3	66–70
15	14	0	3	71–75	3	3	71–75
21	15	0	3	76–80	3	3	76–80
4	16	0	3	81–85	3	3	81–85
10	17	0	3	86–90	3	3	86–90
16	18	0	3	91–95	3	3	91–95
22	19	0	3	96–100	3	3	96–100
5	20	0	3	101–105	3	3	101–105
11	21	0	3	106–110	3	3	106–110
17	22	0	3	111–115	3	3	111–115
23	23	0	3	116–120	3	3	116–120

Note: Physical TPC numbers are assigned by the Operating Company. The above figure shows the recommended physical TPC number assignments for the first TMS in the office. Physical TPC numbers range from 0 to 254 and a unique number must be assigned to each TPC. Logical TPC numbers range from 0 to 23.

DCH internal routing datafill

TOPS DA Subtending TMS (continued)

Naming Conventions for CCI DA

Device Version (NumPvc DestDev DestVer Purpose)

For DestVer = XYZ,

When the DestDev is TPC or ORDB:
X = 1, a real TPC or ORDB link
2, an inter-DCH

When X = 1 (“Real” TPC, DA or ORDB link),
DestDev can be either TPC or ORDB;
Y –> Originating DCH number
Z –> Terminating DCH number
When X = 2 (inter-DCH link),
DestDev must be ORDB;
Y –> Originating DCH number
Z –> Terminating DCH number

When the DestDev is DA;

X = 1, a link connected to the first SCU (DA) on a DCH
2, a link connected to the second SCU (DA) on a DCH

Y –> Originating DCH number
Z –> Terminating DCH number

TOPS DA Subtending TMS (continued)

Naming Conventions for IBM DA

Device Version (NumPvc DestDev DestVer Purpose)

For DestVer = XYZ,

When the DestDev is ORDB:

X = 1, an inter-DCH
2, a real ORDB link

When X = 1 (inter-DCH link),

Y –> Originating DCH number
Z –> Terminating DCH number

When X = 2 (real ORDB link),

Y = Z –> Link to which DCH is connected

When the DestDev is TPC:

XYZ = 125 through 148 for TPC Primary Links. XYZ = 175 through 198 for TPC Secondary Links.

The following tables define the link paths to which the incoming messages are routed.

Table TMSPVC

This table defines the PVC configuration for all link types for CCI-DA and IBM-DA configurations. All entries shown below should be datafilled in the event that both CCI and IBM DA need to be supported on the same switch.

Note: In order to ensure a smooth transition to a new BCS, table TMSPVC is a Dump and Restorable table in BCS31 and later loads. Prior to BCS31, table TMSPVC was datafilled at loadbuild time by an EXT file.

The following tables define the link paths to which the incoming messages are routed.

TOPS DA Subtending TMS (continued)

MAP display example for table TMSPVC

```
PVCKEY        PVCTAB
______        ____________________________________________________________
***  Beginning of Entries for TOPS MP CCI DA and TOPS MPX IBM DA.       ***
***  The following datafill applies up through BCS34. For BCS35 and up, ***
***  refer to TOPS Increased Multiplexing (TIM), OSB00101, which caused ***
***  TOPS base changes whether TIM is present or not.  These           ***
***  BCS35 base changes do not require datafill changes to continue    ***
***  using 4 position cluster sizes on a TMS.                          ***

 DA 1         (4 TPC 1 0)
 ORDB 1       (5 TPC 1 0)
 DA 100       (4 TPC 100 0)(4 TPC 101 1)(4 TPC 102 2)
              (4 TPC 159 9)(4 TPC 165 15)(4 TPC 171 21)
 DA 200       (4 TPC 103 3)(4 TPC 104 4)(4 TPC 105 5)
              (4 TPC 156 6)(4 TPC 162 12)(4 TPC 168 18)
 DA 111       (4 TPC 106 6)(4 TPC 107 7)(4 TPC 108 8)
              (4 TPC 153 3)(4 TPC 166 16)(4 TPC 172 22)
 DA 211       (4 TPC 109 9)(4 TPC 110 10)(4 TPC 111 11)
              (4 TPC 150 0)(4 TPC 163 13)(4 TPC 169 19)
 DA 122       (4 TPC 112 12)(4 TPC 113 13)(4 TPC 114 14)
              (4 TPC 154 4)(4 TPC 160 10)(4 TPC 173 23)
 DA 222       (4 TPC 115 15)(4 TPC 116 16)(4 TPC 117 17)
              (4 TPC 151 1)(4 TPC 157 7)(4 TPC 170 20)
 DA 133       (4 TPC 118 18)(4 TPC 119 19)(4 TPC 120 20)
              (4 TPC 155 5)(4 TPC 161 11)(4 TPC 167 17)
 DA 233       (4 TPC 121 21)(4 TPC 122 22)(4 TPC 123 23)
              (4 TPC 152 2)(4 TPC 158 8)(4 TPC 164 14)
 ORDB 213     (5 TPC 150 0)(5 TPC 153 3)(5 TPC 106 6)
              (5 TPC 107 7)(5 TPC 109 9)(5 TPC 166 16)
 ORDB 231     (5 ORDB 133 0)(5 ORDB 133 3)(5 ORDB 133 6)
              (5 ORDB 133 7)(5 ORDB 133 9)(5 ORDB 133 16)
```

TOPS DA Subtending TMS (continued)

MAP display example for table TMSPVC (continued)

```
ORDB 223     (5 TPC 151 1)(5 TPC 154 4)(5 TPC 160 10)
             (5 TPC 112 12)(5 TPC 113 13)(5 TPC 115 15)
ORDB 232     (5 ORDB 133 1)(5 ORDB 133 4)(5 ORDB 133 10)
             (5 ORDB 133 12)(5 ORDB 133 13)(5 ORDB 133 15)
ORDB 210     (5 TPC 108 8)(5 TPC 110 10)(5 TPC 111 11)
             (5 TPC 163 13)(5 TPC 169 19)(5 TPC 172 22)
ORDB 201     (5 ORDB 100 8)(5 ORDB 100 10)(5 ORDB 100 11)
             (5 ORDB 100 13)(5 ORDB 100 19)(5 ORDB 100 22)
ORDB 220     (5 TPC 157 7)(5 TPC 114 14)(5 TPC 116 16)
             (5 TPC 117 17)(5 TPC 170 20)(5 TPC 173 23)
ORDB 202     (5 ORDB 100 7)(5 ORDB 100 14)(5 ORDB 100 16)
             (5 ORDB 100 17)(5 ORDB 100 20)(5 ORDB 100 23)
ORDB 100     (5 TPC 100 0)(5 TPC 101 1)(5 TPC 102 2)
             (5 TPC 103 3)(5 TPC 104 4)(5 TPC 105 5)
             (5 TPC 156 6)(5 ORDB 202 7)(5 ORDB 201 8)
             (5 TPC 159 9)(5 ORDB 201 10)(5 ORDB 201 11)
             (5 TPC 162 12)(5 ORDB 201 13)(5 ORDB 202 14)
             (5 TPC 165 15)(5 ORDB 202 16)(5 ORDB 202 17)
             (5 TPC 168 18)(5 ORDB 201 19)(5 ORDB 202 20)
             (5 .TPC 171 21)(5 ORDB 201 22)(5 ORDB 202 23)
ORDB 133     (5 ORDB 231 0)(5 ORDB 232 1)(5 TPC 152 2)
             (5 ORDB 231 3)(5 ORDB 232 4)(5 TPC 155 5)
             (5 ORDB 231 6)(5 ORDB 231 7)(5 TPC 158 8)
             (5 ORDB 231 9)(5 ORDB 232 10)(5 TPC 161 11)
             (5 ORDB 232 12)(5 ORDB 232 13)(5 TPC 164 14)
             (5 ORDB 232 15)(5 ORDB 231 16)(5 TPC 167 17)
             (5 TPC 118 18)(5 TPC 119 19)(5 TPC 120 20)
             (5 TPC 121 21)(5 TPC 122 22)(5 TPC 123 23)
TPC 1        (4 DA 1 0)(5 ORDB 1 0)(1 CC 0 0)(4 CC 0 1)
TPC 100      (4 DA 100 0)(5 ORDB 100 0)(1 CC 0 0)(4 CC 0 1)
TPC 150      (4 DA 211 0)(5 ORDB 213 0)(1 CC 0 0)(4 CC 0 1)
TPC 101      (4 DA 100 1)(5 ORDB 100 1)(1 CC 0 0)(4 CC 0 1)
TPC 151      (4 DA 222 1)(5 ORDB 223 1)(1 CC 0 0)(4 CC 0 1)
TPC 102      (4 DA 100 2)(5 ORDB 100 2)(1 CC 0 0)(4 CC 0 1)
TPC 152      (4 DA 233 2)(5 ORDB 133 2)(1 CC 0 0)(4 CC 0 1)
TPC 103      (4 DA 200 3)(5 ORDB 100 3)(1 CC 0 0)(4 CC 0 1)
TPC 153      (4 DA 111 3)(5 ORDB 213 3)(1 CC 0 0)(4 CC 0 1)
TPC 104      (4 DA 200 4)(5 ORDB 100 4)(1 CC 0 0)(4 CC 0 1)
TPC 154      (4 DA 122 4)(5 ORDB 223 4)(1 CC 0 0)(4 CC 0 1)
TPC 105      (4 DA 200 5)(5 ORDB 100 5)(1 CC 0 0)(4 CC 0 1)
TPC 155      (4 DA 133 5)(5 ORDB 133 5)(1 CC 0 0)(4 CC 0 1)
TPC 156      (4 DA 200 6)(5 ORDB 100 6)(1 CC 0 0)(4 CC 0 1)
TPC 106      (4 DA 111 6)(5 ORDB 213 6)(1 CC 0 0)(4 CC 0 1)
TPC 157      (4 DA 222 7)(5 ORDB 220 7)(1 CC 0 0)(4 CC 0 1)
TPC 107      (4 DA 111 7)(5 ORDB 213 7)(1 CC 0 0)(4 CC 0 1)
```

TOPS DA Subtending TMS (continued)

MAP display example for table TMSPVC (continued)

```
TPC 108     (4 DA 111 8)(5 ORDB 210 8)(1 CC 0 0)(4 CC 0 1)
TPC 158     (4 DA 233 8)(5 ORDB 133 8)(1 CC 0 0)(4 CC 0 1)
TPC 109     (4 DA 211 9)(5 ORDB 213 9)(1 CC 0 0)(4 CC 0 1)
TPC 159     (4 DA 100 9)(5 ORDB 100 9)(1 CC 0 0)(4 CC 0 1)
TPC 110     (4 DA 211 10)(5 ORDB 210 10)(1 CC 0 0)(4 CC 0 1)
TPC 160     (4 DA 122 10)(5 ORDB 223 10)(1 CC 0 0)(4 CC 0 1)
TPC 111     (4 DA 211 11)(5 ORDB 210 11)(1 CC 0 0)(4 CC 0 1)
TPC 161     (4 DA 133 11)(5 ORDB 133 11)(1 CC 0 0)(4 CC 0 1)
TPC 162     (4 DA 200 12)(5 ORDB 100 12)(1 CC 0 0)(4 CC 0 1)
TPC 112     (4 DA 122 12)(5 ORDB 223 12)(1 CC 0 0)(4 CC 0 1)
TPC 163     (4 DA 211 13)(5 ORDB 210 13)(1 CC 0 0)(4 CC 0 1)
TPC 113     (4 DA 122 13)(5 ORDB 223 13)(1 CC 0 0)(4 CC 0 1)
TPC 164     (4 DA 233 14)(5 ORDB 133 14)(1 CC 0 0)(4 CC 0 1)
TPC 114     (4 DA 122 14)(5 ORDB 220 14)(1 CC 0 0)(4 CC 0 1)
TPC 165     (4 DA 100 15)(5 ORDB 100 15)(1 CC 0 0)(4 CC 0 1)
TPC 115     (4 DA 222 15)(5 ORDB 223 15)(1 CC 0 0)(4 CC 0 1)
TPC 116     (4 DA 222 16)(5 ORDB 220 16)(1 CC 0 0)(4 CC 0 1)
TPC 166     (4 DA 111 16)(5 ORDB 213 16)(1 CC 0 0)(4 CC 0 1)
TPC 117     (4 DA 222 17)(5 ORDB 220 17)(1 CC 0 0)(4 CC 0 1)
TPC 167     (4 DA 133 17)(5 ORDB 133 17)(1 CC 0 0)(4 CC 0 1)
TPC 168     (4 DA 200 18)(5 ORDB 100 18)(1 CC 0 0)(4 CC 0 1)
TPC 118     (4 DA 133 18)(5 ORDB 133 18)(1 CC 0 0)(4 CC 0 1)
TPC 169     (4 DA 211 19)(5 ORDB 210 19)(1 CC 0 0)(4 CC 0 1)
TPC 119     (4 DA 133 19)(5 ORDB 133 19)(1 CC 0 0)(4 CC 0 1)
TPC 170     (4 DA 222 20)(5 ORDB 220 20)(1 CC 0 0)(4 CC 0 1)
TPC 120     (4 DA 133 20)(5 ORDB 133 20)(1 CC 0 0)(4 CC 0 1)
TPC 171     (4 DA 100 21)(5 ORDB 100 21)(1 CC 0 0)(4 CC 0 1)
TPC 121     (4 DA 233 21)(5 ORDB 133 21)(1 CC 0 0)(4 CC 0 1)
TPC 172     (4 DA 111 22)(5 ORDB 210 22)(1 CC 0 0)(4 CC 0 1)
TPC 122     (4 DA 233 22)(5 ORDB 133 22)(1 CC 0 0)(4 CC 0 1)
TPC 173     (4 DA 122 23)(5 ORDB 220 23)(1 CC 0 0)(4 CC 0 1)
TPC 123     (4 DA 233 23)(5 ORDB 133 23)(1 CC 0 0)(4 CC 0 1)
```

Note 1: ORDB 213, ORDB 231, ORDB 223, ORDB 232, ORDB 210, ORDB 201, ORDB 220, and ORDB 202 are for inter-DCH links.

Note 2: ORDB 100 and ORDB 133 are ORDB links connected to FEPs.

Note 3: TPC 100 to TPC 123 are for one of the two TPCs' links that connect to an FEP; TPC 150 to TPC 173 are for the other TPCs' links that connect to the other FEP.

TOPS DA Subtending TMS (continued)

MAP display example for table TMSPVC (continued)

```
PVCKEY        PVCTAB
_____         ____________________________________________________________

  ***** Beginning of TOPS MP IBM DA Entries *****

 DA 10        (4 TPC 125 0)(4 TPC 126 1)(4 TPC 181 6)
              (4 TPC 182 7)
 DA 20        (4 TPC 127 2)(4 TPC 128 3)(4 TPC 187 12)
              (4 TPC 188 13)
 DA 30        (4 TPC 129 4)(4 TPC 130 5)(4 TPC 193 18)
              (4 TPC 194 19)
 DA 11        (4 TPC 131 6)(4 TPC 132 7)(4 TPC 175 0)
              (4 TPC 176 1)
 DA 21        (4 TPC 133 8)(4 TPC 134 9)(4 TPC 189 14)
              (4 TPC 190 15)
 DA 31        (4 TPC 135 10)(4 TPC 136 11)(4 TPC 195 20)
              (4 TPC 196 21)
 DA 12        (4 TPC 177 2)(4 TPC 178 3)(4 TPC 137 12)
              (4 TPC 138 13)
 DA 22        (4 TPC 183 8)(4 TPC 184 9)(4 TPC 139 14)
              (4 TPC 140 15)
 DA 32        (4 TPC 141 16)(4 TPC 142 17)(4 TPC 197 22)
              (4 TPC 198 23)
 DA 13        (4 TPC 143 18)(4 TPC 144 19)(4 TPC 179 4)
              (4 TPC 180 5)
 DA 23        (4 TPC 145 20)(4 TPC 146 21)(4 TPC 185 10)
              (4 TPC 186 11)
 DA 33        (4 TPC 191 16)(4 TPC 192 17)(4 TPC 147 22)
              (4 TPC 148 23)
 ORDB 113     (5 TPC 175 0)(5 TPC 176 1)(5 TPC 131 6)
              (5 TPC 132 7)(5 TPC 189 14)(5 TPC 190 15)
 ORDB 131     (5 ORDB 233 0)(5 ORDB 233 1)(5 ORDB 233 6)
              (5 ORDB 233 7)(5 ORDB 233 14)(5 ORDB 233 15)
 ORDB 123     (5 TPC 177 2)(5 TPC 178 3)(5 TPC 183 8)
              (5 TPC 184 9)(5 TPC 137 12)(5 TPC 138 13)
 ORDB 132     (5 ORDB 233 2)(5 ORDB 233 3)(5 ORDB 233 8)
              (5 ORDB 233 9)(5 ORDB 233 12)(5 ORDB 233 13)
 ORDB 110     (5 TPC 133 8)(5 TPC 134 9)(5 TPC 135 10)
              (5 TPC 136 11)(5 TPC 195 20)(5 TPC 196 21)
 ORDB 101     (5 ORDB 200 8)(5 ORDB 200 9)(5 ORDB 200 10)
              (5 ORDB 200 11)(5 ORDB 200 20)(5 ORDB 200 21)
 ORDB 120     (5 TPC 139 14)(5 TPC 140 15)(5 TPC 141 16)
              (5 TPC 142 17)(5 TPC 197 22)(5 TPC 198 23)
 ORDB 102     (5 ORDB 200 14)(5 ORDB 200 15)(5 ORDB 200 16)
              (5 ORDB 200 17)(5 ORDB 200 22)(5 ORDB 200 23)
```

TOPS DA Subtending TMS (continued)

MAP display example for table TMSPVC (continued)

```
ORDB 200     (5 TPC 125 0)(5 TPC 126 1)(5 TPC 127 2)
             (5 TPC 128 3)(5 TPC 129 4)(5 TPC 130 5)
             (5 TPC 181 6)(5 TPC 182 7)(5 ORDB 101 8)
             (5 ORDB 101 9)(5 ORDB 101 10)(5 ORDB 101 11)
             (5 TPC 187 12)(5 TPC 188 13)(5 ORDB 102 14)
             (5 ORDB 102 15)(5 ORDB 102 16)(5 ORDB 102 17)
             (5 TPC 193 18)(5 TPC 194 19)(5 ORDB 101 20)
             (5 ORDB 101 21)(5 ORDB 102 22)(5 ORDB 102 23)
ORDB 233     (5 ORDB 131 0)(5 ORDB 131 1)(5 ORDB 132 2)
             (5 ORDB 132 3)(5 TPC 179 4)(5 TPC 180 5)
             (5 ORDB 131 6)(5 ORDB 131 7)(5 ORDB 132 8)
             (5 ORDB 132 9)(5 TPC 185 10)(5 TPC 186 11)
             (5 ORDB 132 12)(5 ORDB 132 13)(5 ORDB 131 14)
             (5 ORDB 131 15)(5 TPC 191 16)(5 TPC 192 17)
             (5 TPC 143 18)(5 TPC 144 19)(5 TPC 145 20)
             (5 TPC 146 21)(5 TPC 147 22)(5 TPC 148 23)
TPC 125      (4 DA 10 0)(5 ORDB 200 0)(1 CC 0 0)(4 CC 0 1)
TPC 175      (4 DA 11 0)(5 ORDB 113 0)(1 CC 0 0)(4 CC 0 1)
TPC 126      (4 DA 10 1)(5 ORDB 200 1)(1 CC 0 0)(4 CC 0 1)
TPC 176      (4 DA 11 1)(5 ORDB 113 1)(1 CC 0 0)(4 CC 0 1)
TPC 127      (4 DA 20 2)(5 ORDB 200 2)(1 CC 0 0)(4 CC 0 1)
TPC 177      (4 DA 12 2)(5 ORDB 123 2)(1 CC 0 0)(4 CC 0 1)
TPC 128      (4 DA 20 3)(5 ORDB 200 3)(1 CC 0 0)(4 CC 0 1)
TPC 178      (4 DA 12 3)(5 ORDB 123 3)(1 CC 0 0)(4 CC 0 1)
TPC 129      (4 DA 30 4)(5 ORDB 200 4)(1 CC 0 0)(4 CC 0 1)
TPC 179      (4 DA 13 4)(5 ORDB 233 4)(1 CC 0 0)(4 CC 0 1)
TPC 130      (4 DA 30 5)(5 ORDB 200 5)(1 CC 0 0)(4 CC 0 1)
TPC 180      (4 DA 13 5)(5 ORDB 233 5)(1 CC 0 0)(4 CC 0 1)
TPC 181      (4 DA 10 6)(5 ORDB 200 6)(1 CC 0 0)(4 CC 0 1)
TPC 131      (4 DA 11 6)(5 ORDB 113 6)(1 CC 0 0)(4 CC 0 1)
TPC 182      (4 DA 10 7)(5 ORDB 200 7)(1 CC 0 0)(4 CC 0 1)
TPC 132      (4 DA 11 7)(5 ORDB 113 7)(1 CC 0 0)(4 CC 0 1)
TPC 133      (4 DA 21 8)(5 ORDB 110 8)(1 CC 0 0)(4 CC 0 1)
TPC 183      (4 DA 22 8)(5 ORDB 123 8)(1 CC 0 0)(4 CC 0 1)
TPC 134      (4 DA 21 9)(5 ORDB 110 9)(1 CC 0 0)(4 CC 0 1)
TPC 184      (4 DA 22 9)(5 ORDB 123 9)(1 CC 0 0)(4 CC 0 1)
TPC 135      (4 DA 31 10)(5 ORDB 110 10)(1 CC 0 0)(4 CC 0 1)
TPC 185      (4 DA 23 10)(5 ORDB 233 10)(1 CC 0 0)(4 CC 0 1)
TPC 136      (4 DA 31 11)(5 ORDB 110 11)(1 CC 0 0)(4 CC 0 1)
TPC 186      (4 DA 23 11)(5 ORDB 233 11)(1 CC 0 0)(4 CC 0 1)
TPC 187      (4 DA 20 12)(5 ORDB 200 12)(1 CC 0 0)(4 CC 0 1)
TPC 137      (4 DA 12 12)(5 ORDB 123 12)(1 CC 0 0)(4 CC 0 1)
TPC 188      (4 DA 20 13)(5 ORDB 200 13)(1 CC 0 0)(4 CC 0 1)
TPC 138      (4 DA 12 13)(5 ORDB 123 13)(1 CC 0 0)(4 CC 0 1)
TPC 189      (4 DA 21 14)(5 ORDB 113 14)(1 CC 0 0)(4 CC 0 1)
```

TOPS DA Subtending TMS (continued)

MAP display example for table TMSPVC (continued)

```
TPC 139     (4 DA 22 14)(5 ORDB 120 14)(1 CC 0 0)(4 CC 0 1)
TPC 190     (4 DA 21 15)(5 ORDB 113 15)(1 CC 0 0)(4 CC 0 1)
TPC 140     (4 DA 22 15)(5 ORDB 120 15)(1 CC 0 0)(4 CC 0 1)
TPC 141     (4 DA 32 16)(5 ORDB 120 16)(1 CC 0 0)(4 CC 0 1)
TPC 191     (4 DA 33 16)(5 ORDB 233 16)(1 CC 0 0)(4 CC 0 1)
TPC 142     (4 DA 32 17)(5 ORDB 120 17)(1 CC 0 0)(4 CC 0 1)
TPC 192     (4 DA 33 17)(5 ORDB 233 17)(1 CC 0 0)(4 CC 0 1)
TPC 193     (4 DA 30 18)(5 ORDB 200 18)(1 CC 0 0)(4 CC 0 1)
TPC 143     (4 DA 13 18)(5 ORDB 233 18)(1 CC 0 0)(4 CC 0 1)
TPC 194     (4 DA 30 19)(5 ORDB 200 19)(1 CC 0 0)(4 CC 0 1)
TPC 144     (4 DA 13 19)(5 ORDB 233 19)(1 CC 0 0)(4 CC 0 1)
TPC 195     (4 DA 31 20)(5 ORDB 110 20)(1 CC 0 0)(4 CC 0 1)
TPC 145     (4 DA 23 20)(5 ORDB 233 20)(1 CC 0 0)(4 CC 0 1)
TPC 196     (4 DA 31 21)(5 ORDB 110 21)(1 CC 0 0)(4 CC 0 1)
TPC 146     (4 DA 23 21)(5 ORDB 233 21)(1 CC 0 0)(4 CC 0 1)
TPC 197     (4 DA 32 22)(5 ORDB 120 22)(1 CC 0 0)(4 CC 0 1)
TPC 147     (4 DA 33 22)(5 ORDB 233 22)(1 CC 0 0)(4 CC 0 1)
TPC 198     (4 DA 32 23)(5 ORDB 120 23)(1 CC 0 0)(4 CC 0 1)
TPC 148     (4 DA 33 23)(5 ORDB 233 23)(1 CC 0 0)(4 CC 0 1)
```

Note 1: ORDB 113, ORDB 131, ORDB 123, ORDB 132, ORDB 110, ORDB 101, ORDB 120, and ORDB 102 are for inter-DCH links.

Note 2: ORDB 200 and ORDB 233 are ORDB links connected to FEPs.

Note 3: TPC 125 to TPC 148 are for one of the two TPCs' links that connect to an FEP; TPC 175 to TPC 198 are for the other TPCs' links that connect to the other FEP.

Table TDCDEF

Note 1: In BCS30, PRTCLPAR = DCEL.

Note 2: In BCS31, PRTCLPAR = X25DCEL.

Note 3: The following datafill applies up through BCS34. For BCS35 and up, refer to TOPS Increased Multiplexing, OSB00101, which causes TOPS base changes whether TOPS Increased Multiplexing is present or not. These BCS35 base changes do not require datafill changes to continue using 4-position cluster sizes on a TMS.

TOPS DA Subtending TMS (continued)

MAP display example for table TDCDEF

```
ISGNO
-----
   0

TDCTAB
------
   (1 X25DCEL TPC 100)(2 X25DCEL TPC 103)(3 X25DCEL ORDB 100)
   (5 X25DCEL TPC 101)(6 X25DCEL TPC 104)(7 X25DCEL ORDB 201)
   (9 X25DCEL TPC 102)(10 X25DCEL TPC 105)(11 X25DCEL ORDB 202)
   (13 X25DCEL TPC 159)(14 X25DCEL TPC 156)(17 X25DCEL TPC 165)
   (18 X25DCEL TPC 162)(21 X25DCEL TPC 171)(22 X25DCEL TPC 168)
   (25 X25DCEL DA 100)(26 X25DCEL DA 200)


ISGNO
------
   1

TDCTAB
------
   (1 X25DCEL TPC 106)(2 X25DCEL TPC 109)
   (5 X25DCEL TPC 107)(6 X25DCEL TPC 110)(7 X25DCEL ORDB 210)
   (9 X25DCEL TPC 108)(10 X25DCEL TPC 111)(11 X25DCEL ORDB 213)
   (13 X25DCEL TPC 153)(14 X25DCEL TPC 150)(17 X25DCEL TPC 166)
   (18 X25DCEL TPC 163)(21 X25DCEL TPC 172)(22 X25DCEL TPC 169)
   (25 X25DCEL DA 111)(26 X25DCEL DA 211)


ISGNO
-----
   2

TDCTAB
------
   (1 X25DCEL TPC 112)(2 X25DCEL TPC 115)
   (5 X25DCEL TPC 113)(6 X25DCEL TPC 116)(7 X25DCEL ORDB 223)
   (9 X25DCEL TPC 114)(10 X25DCEL TPC 117)(11 X25DCEL ORDB 220)
   (13 X25DCEL TPC 154)(14 X25DCEL TPC 151)(17 X25DCEL TPC 160)
   (18 X25DCEL TPC 157)(21 X25DCEL TPC 173)(22 X25DCEL TPC 170)
   (25 X25DCEL DA 122)(26 X25DCEL DA 222)
```

TOPS DA Subtending TMS (continued)

MAP display example for table TDCDEF (continued)

```
ISGNO
-----
3

TDCTAB
------
   (1 X25DCEL TPC 118)(2 X25DCEL TPC 121)(3 X25DCEL ORDB 133)
   (5 X25DCEL TPC 119)(6 X25DCEL TPC 122)(7 X25DCEL ORDB 232)
   (9 X25DCEL TPC 120)(10 X25DCEL TPC 123)(11 X25DCEL ORDB 231)
   (13 X25DCEL TPC 155)(14 X25DCEL TPC 152)(17 X25DCEL TPC 161)
   (18 X25DCEL TPC 158)(21 X25DCEL TPC 167)(22 X25DCEL TPC 164)

   (25 X25DCEL DA 133)(26 X25DCEL DA 233)
```

TOPS DA Subtending TMS (continued)

MAP display example for table TDCDEF for IBM DA

```
ISGNO
-----
   0

TDCTAB
------
   (1 X25DCEL TPC 125)(2 X25DCEL TPC 127)(3 X25DCEL ORDB 200)
   (5 X25DCEL TPC 126)(6 X25DCEL TPC 128)(7 X25DCEL ORDB 101)
   (9 X25DCEL TPC 181)(10 X25DCEL TPC 187)(11 X25DCEL ORDB 102)
   (13 X25DCEL TPC 182)(14 X25DCEL TPC 188)(15 X25DCEL TPC 129)
   (17 X25DCEL DA 10)(18 X25DCEL DA 20)(19 X25DCEL TPC 130)
   (23 X25DCEL TPC 193)(27 X25DCEL TPC 194)(31 X25DCEL DA 30)

ISGNO
-----
   1

TDCTAB
------
   (1 X25DCEL TPC 131)(2 X25DCEL TPC 133)
   (5 X25DCEL TPC 132)(6 X25DCEL TPC 134)(7 X25DTEL ORDB 110)
   (9 X25DCEL TPC 175)(10 X25DCEL TPC 189)(11 X25DTEL ORDB 113)
   (13 X25DCEL TPC 176)(14 X25DCEL TPC 190)
   (15 X25DCEL TPC 135)(17 X25DCEL DA 11)
   (18 X25DCEL DA 21)(19 X25DCEL TPC 136)(23 X25DCEL TPC 195)
   (27 X25DCEL TPC 196)(31 X25DCEL DA 31)

ISGNO
-----
   2

TDCTAB
------
   (1 X25DCEL TPC 137)(2 X25DCEL TPC 139)
   (5 X25DCEL TPC 138)(6 X25DCEL TPC 140)(7 X25DTEL ORDB 123)
   (9 X25DCEL TPC 177)(10 X25DCEL TPC 183)(11 X25DTEL ORDB 120)
   (13 X25DCEL TPC 178)(14 X25DCEL TPC 184)
   (15 X25DCEL TPC 141)(17 X25DCEL DA 12)
   (18 X25DCEL DA 22)(19 X25DCEL TPC 142)(23 X25DCEL TPC 197)
   (27 X25DCEL TPC 198)(31 X25DCEL DA 32)
```

MAP display example for table TDCDEF for IBM DA (continued)

```
ISGNO
-----
   3

TDCTAB
------
   (1 X25DCEL TPC 143)(2 X25DCEL TPC 145)(3 X25DCEL ORDB 233)
   (5 X25DCEL TPC 144)(6 X25DCEL TPC 146)(7 X25DCEL ORDB 132)
   (9 X25DCEL TPC 179)(10 X25DCEL TPC 185)(11 X25DCEL ORDB 131)
   (13 X25DCEL TPC 180)(14 X25DCEL TPC 186)(15 X25DCEL TPC 147)
   (17 X25DCEL DA 13)(18 X25DCEL DA 23)(19 X25DCEL TPC 148)
   (23 X25DCEL TPC 191)(27 X25DCEL TPC 192)(31 X25DCEL DA 33)
```

DCH external links datafill

The following tables define the datafill that is used to make DCH-TPC, DCH-DA and DCH-ORDB connections.

Table LTCINV

Eight C-side ports are needed to match the 10 P-side ports used. Note that there are 30 voice channels per C-side port. The C-side port numbers that can be used in this table would depend on the actual office wiring. An example follows.

TOPS DA Subtending TMS (continued)

MAP display example for table LTCINV

```
LTCNAME  FRTYPE  FRNO  SHOPS  FLOOR  ROW  FRPOS  EQPEC
_______  _______ ____  _____  _____  ___  _____  ______
 TMS 0    LTE     0     18     0      L    2     6X02AA

LOAD     EXECTAB
_______  ____________
TMS30BA  (ABTRK DTCEX)

CSLNKTAB
_____________________________________________________
(0 20)(0 21)(1 18)(1 19)(0 42)(1 44)(0 46)(1 50)


OPTCARD  TONESET   PECS6X45
_______  ________  _____________
MSG6X69  DEFAULT   6X45BA 6X45BA

OPTATTR
_______
 $
```

MAP display example for table DCHINV

```
 DCHNO   PMTYPE  PMNO    DCHPEC   LOAD       PORT
 _____   _______ _____   _______  ________   _____
   0       TMS     0     BX02AA   XCH30BA      17
   1       TMS     0     BX02AA   XCH30BA      19
   2       TMS     0     BX02AA   XCH30BA      15
   3       TMS     0     BX02AA   XCH30BA      13
```

TOPS DA Subtending TMS (continued)

MAP display example for table ISGDEF

```
ISGNO  PMTYPE  PMNO  SERVICE
_____  _______ ____  ________
  0      TMS     0     TDC

CHNLTAB
_______
(0 RESERVED)(1 TDC 56K OFF)(2 TDC 56K OFF)(3 TDC 56K OFF)
(4 TDC 56K OFF)(5 TDC 56K OFF)(6 TDC 56K OFF)(7 TDC 56K OFF)
(8 TDC 56K OFF)(9 TDC 56K OFF)(10 TDC 56K OFF)(11 TDC 56K OFF)
(12 TDC 56K OFF)(13 TDC 56K OFF)(14 TDC 56K OFF)(15 TDC 56K OFF)
(16 TDC 56K OFF)(17 TDC 56K OFF)(18 TDC 56K OFF)(19 TDC 56K OFF)
(20 TDC 56K OFF)(21 TDC 56K OFF)(22 TDC 56K OFF)(23 TDC 56K OFF)
(24 TDC 56K OFF)(25 TDC 56K OFF)(26 TDC 56K OFF)(27 TDC 56K OFF)
(28 TDC 56K OFF)(29 TDC 56K OFF)(30 TDC 56K OFF)(31 TDC 56K OFF)
```

Note: ISG 1, 2 and 3 have the same datafill except the ISGNO would have 1, 2 and 3, respectively.

Table LTCPSINV

Per TMS, there are 16 P-side ports (20 max) being used, 12 ports for DS1, and 4 ports for DCH.

MAP display example for table LTCPSINV

```
LTCNAME
_______
 TMS 0

PSLNKTAB
________
(0 DS1 DEFAULT N)(1 DS1 DEFAULT N)(2 DS1 DEFAULT N)
(3 DS1 DEFAULT N)(4 DS1 DEFAULT N)(5 DS1 DEFAULT N)
(6 DS1 DEFAULT N)(7 DS1 DEFAULT N)(8 DS1 DEFAULT N)
(9 DS1 DEFAULT N)(10 DS1 DEFAULT)(11 DS1 DEFAULT)
(12 NILTYPE)(13 DCH)(14 NILTYPE)(15 DCH)(16 NILTYPE)
(17 DCH)(18 NILTYPE)(19 DCH)
```

Table TPCINV

Note: Only one data link is entered for MPX.

TOPS DA Subtending TMS (continued)

MAP display example for table TPCINV

```
TPCNAME FRTYPE FRNO SHPOS FLOOR ROW FRPOS LOAD TMSNO
------- ------ ---- ----- ----- --- ----- ---- -----
 TPC 0    PCE    0    0     0    AA   0     0    0

TMSCKTNO  TMSCKTTS  CLUSTRSZ
--------  --------  ---------
   0       (5)(6)        4

TPCNAME FRTYPE FRNO SHPOS FLOOR ROW FRPOS LOAD TMSNO
------- ------ ---- ----- ----- --- ----- ---- -----
 TPC 1    PCE    0    0     0    AA   0     0    0

TMSCKTNO  TMSCKTTS  CLUSTRSZ
--------  --------  ---------
   0      (11)(12)       4

TPCNAME FRTYPE FRNO SHPOS FLOOR ROW FRPOS LOAD TMSNO
------- ------ ---- ----- ----- --- ----- ---- -----
 TPC 2    PCE    0    0     0    AA   0     0    0

TMSCKTNO  TMSCKTTS  CLUSTRSZ
--------  --------  ---------
   0      (17)(18)       4

TPCNAME FRTYPE FRNO SHPOS FLOOR ROW FRPOS LOAD TMSNO
------- ------ ---- ----- ----- --- ----- ---- -----
 TPC 3    PCE    0    0     0    AA   0     0    0

TMSCKTNO  TMSCKTTS  CLUSTRSZ
--------  --------  ---------
   0      (23)(24)       4
TPCNAME FRTYPE FRNO SHPOS FLOOR ROW FRPOS LOAD TMSNO
------- ------ ---- ----- ----- --- ----- ---- -----
 TPC 4    PCE    0    0     0    AA   0     0    0

TMSCKTNO  TMSCKTTS  CLUSTRSZ
--------  --------  ---------
   1       (5)(6)        4
```

TOPS DA Subtending TMS (continued)

MAP display example for table TPCINV (continued)

```
TPCNAME FRTYPE FRNO SHPOS FLOOR ROW FRPOS LOAD TMSNO
------- ------ ---- ----- ----- --- ----- ---- -----
 TPC 5    PCE    0    0     0    AA   0     0    0

TMSCKTNO  TMSCKTTS  CLUSTRSZ
--------  --------  ---------
   1      (11)(12)       4

TPCNAME FRTYPE FRNO SHPOS FLOOR ROW FRPOS LOAD TMSNO
------- ------ ---- ----- ----- --- ----- ---- -----
 TPC 6    PCE    0    0     0    AA   0     0    0

TMSCKTNO  TMSCKTTS  CLUSTRSZ
--------  --------  ---------
   1      (17)(18)       4

TPCNAME FRTYPE FRNO SHPOS FLOOR ROW FRPOS LOAD TMSNO
------- ------ ---- ----- ----- --- ----- ---- -----
 TPC 7    PCE    0    0     0    AA   0     0    0

TMSCKTNO  TMSCKTTS  CLUSTRSZ
--------  --------  ---------
   1      (23)(24)       4

TPCNAME FRTYPE FRNO SHPOS FLOOR ROW FRPOS LOAD TMSNO
------- ------ ---- ----- ----- --- ----- ---- -----
 TPC 8    PCE    0    0     0    AA   0     0    0

TMSCKTNO  TMSCKTTS  CLUSTRSZ
--------  --------  ---------
   2       (5)(6)        4
TPCNAME FRTYPE FRNO SHPOS FLOOR ROW FRPOS LOAD TMSNO
------- ------ ---- ----- ----- --- ----- ---- -----
 TPC 9    PCE    0    0     0    AA   0     0    0

TMSCKTNO  TMSCKTTS  CLUSTRSZ
--------  --------  ---------
   2      (11)(12)       4
TPCNAME FRTYPE FRNO SHPOS FLOOR ROW FRPOS LOAD TMSNO
------- ------ ---- ----- ----- --- ----- ---- -----
 TPC 10   PCE    0    0     0    AA   0     0    0

TMSCKTNO  TMSCKTTS  CLUSTRSZ
--------  --------  ---------
   2      (17)(18)       4
```

TOPS DA Subtending TMS (continued)

MAP display example for table TPCINV (continued)

```
TPCNAME FRTYPE FRNO SHPOS FLOOR ROW FRPOS LOAD TMSNO
------- ------ ---- ----- ----- --- ----- ---- -----
 TPC 11   PCE    0    0     0    AA   0     0    0

TMSCKTNO  TMSCKTTS  CLUSTRSZ
--------  --------  ---------
   2      (23)(24)       4

TPCNAME FRTYPE FRNO SHPOS FLOOR ROW FRPOS LOAD TMSNO
------- ------ ---- ----- ----- --- ----- ---- -----
 TPC 12   PCE    0    0     0    AA   0     0    0

TMSCKTNO  TMSCKTTS  CLUSTRSZ
--------  --------  ---------
   3       (5)(6)        4

TPCNAME FRTYPE FRNO SHPOS FLOOR ROW FRPOS LOAD TMSNO
------- ------ ---- ----- ----- --- ----- ---- -----
 TPC 13   PCE    0    0     0    AA   0     0    0

TMSCKTNO  TMSCKTTS  CLUSTRSZ
--------  --------  ---------
   3      (11)(12)       4

TPCNAME FRTYPE FRNO SHPOS FLOOR ROW FRPOS LOAD TMSNO
------- ------ ---- ----- ----- --- ----- ---- -----
 TPC 14   PCE    0    0     0    AA   0     0    0

TMSCKTNO  TMSCKTTS  CLUSTRSZ
--------  --------  ---------
   3      (17)(18)       4
TPCNAME FRTYPE FRNO SHPOS FLOOR ROW FRPOS LOAD TMSNO
------- ------ ---- ----- ----- --- ----- ---- -----
 TPC 15   PCE    0    0     0    AA   0     0    0

TMSCKTNO  TMSCKTTS  CLUSTRSZ
--------  --------  ---------
   3      (23)(24)       4
TPCNAME FRTYPE FRNO SHPOS FLOOR ROW FRPOS LOAD TMSNO
------- ------ ---- ----- ----- --- ----- ---- -----
 TPC 16   PCE    0    0     0    AA   0     0    0

TMSCKTNO  TMSCKTTS  CLUSTRSZ
--------  --------  ---------
   4       (5)(6)        4
```

TOPS DA Subtending TMS (continued)

MAP display example for table TPCINV (continued)

```
TPCNAME FRTYPE FRNO SHPOS FLOOR ROW FRPOS LOAD TMSNO
------- ------ ---- ----- ----- --- ----- ---- -----
 TPC 17   PCE    0    0     0    AA   0     0    0

TMSCKTNO  TMSCKTTS  CLUSTRSZ
--------  --------  ---------
   4      (11)(12)       4

TPCNAME FRTYPE FRNO SHPOS FLOOR ROW FRPOS LOAD TMSNO
------- ------ ---- ----- ----- --- ----- ---- -----
 TPC 18   PCE    0    0     0    AA   0     0    0

TMSCKTNO  TMSCKTTS  CLUSTRSZ
--------  --------  ---------
   4      (17)(18)       4

TPCNAME FRTYPE FRNO SHPOS FLOOR ROW FRPOS LOAD TMSNO
------- ------ ---- ----- ----- --- ----- ---- -----
 TPC 19   PCE    0    0     0    AA   0     0    0

TMSCKTNO  TMSCKTTS  CLUSTRSZ
--------  --------  ---------
   4      (23)(24)       4

TPCNAME FRTYPE FRNO SHPOS FLOOR ROW FRPOS LOAD TMSNO
------- ------ ---- ----- ----- --- ----- ---- -----
 TPC 20   PCE    0    0     0    AA   0     0    0

TMSCKTNO  TMSCKTTS  CLUSTRSZ
--------  --------  ---------
   5       (5)(6)       4
TPCNAME FRTYPE FRNO SHPOS FLOOR ROW FRPOS LOAD TMSNO
------- ------ ---- ----- ----- --- ----- ---- -----
 TPC 21   PCE    0    0     0    AA   0     0    0

TMSCKTNO  TMSCKTTS  CLUSTRSZ
--------  --------  ---------
   5      (11)(12)       4
TPCNAME FRTYPE FRNO SHPOS FLOOR ROW FRPOS LOAD TMSNO
------- ------ ---- ----- ----- --- ----- ---- -----
 TPC 22   PCE    0    0     0    AA   0     0    0

TMSCKTNO  TMSCKTTS  CLUSTRSZ
--------  --------  ---------
   5      (17)(18)       4
```

TOPS DA Subtending TMS (continued)

MAP display example for table TPCINV (continued)

```
TPCNAME FRTYPE FRNO SHPOS FLOOR ROW FRPOS LOAD TMSNO
------- ------ ---- ----- ----- --- ----- ---- -----
 TPC 23   PCE    0    0     0    AA   0     0    0

TMSCKTNO  TMSCKTTS  CLUSTRSZ
--------  --------  ---------
   5      (23)(24)       4
```

MAP display example for table TMSPSDEV for TOPS MP CCI DA and TOPS MPX IBM DA

```
DEVNAME     TMS NO      CKTTAB
---------   -------     ----------------
 DA 1          0        6 CHNLS 1 2 3 4
 DA 2          0        8 CHNLS 1 2 3 4
 ORDB 1        0        7 CHNLS 1
 ORDB 2        0        9 CHNLS 1
 ORDB 10       0        10 CHNLS 1 2 3 4
 ORDB 11       0        11 CHNLS 1 2 3 4
```

Note: ORDB 10 and ORDB 11 are inter-DCH channels.

MAP display example for table TMSPSDEV for TOPS MP IBM DA

```
DEVNAME     TMS NO      CKTTAB
---------   -------     --------------------
 DA 1          0        6 CHNLS 1 2 3 4 5 6
 DA 2          0        8 CHNLS 1 2 3 4 5 6
 ORDB 1        0        7 CHNLS 1
 ORDB 2        0        9 CHNLS 1
 ORDB 10       0        10 CHNLS 1 2 3 4
 ORDB 11       0        11 CHNLS 1 2 3 4
```

Note: ORDB 10 and ORDB 11 are inter-DCH channels.

TOPS DA Subtending TMS (continued)

MAP display example for table TOPSPOS

```
POS   VCCKT      VCPD   CARD    DATAPATH          POSAREA
NO               GRP    CODE
--- ---------- ------ ------ ----------------- -------------
100 TMS 0 0  1 NPDGRP DS1SIG TMS MP ASCII  0 0 OPR  2 ALL ALL
101 TMS 0 0  2 NPDGRP DS1SIG TMS MP ASCII  0 1 OPR  2 ALL ALL
102 TMS 0 0  3 NPDGRP DS1SIG TMS MP ASCII  0 2 OPR  2 ALL ALL
103 TMS 0 0  4 NPDGRP DS1SIG TMS MP ASCII  0 3 OPR  2 ALL ALL
104 TMS 0 0  7 NPDGRP DS1SIG TMS MP ASCII  1 0 OPR  2 ALL ALL
105 TMS 0 0  8 NPDGRP DS1SIG TMS MP ASCII  1 1 OPR  2 ALL ALL
106 TMS 0 0  9 NPDGRP DS1SIG TMS MP ASCII  1 2 OPR  2 ALL ALL
107 TMS 0 0 10 NPDGRP DS1SIG TMS MP ASCII  1 3 OPR  2 ALL ALL
108 TMS 0 0 13 NPDGRP DS1SIG TMS MP ASCII  2 0 OPR  2 ALL ALL
109 TMS 0 0 14 NPDGRP DS1SIG TMS MP ASCII  2 1 OPR  2 ALL ALL
110 TMS 0 0 15 NPDGRP DS1SIG TMS MP ASCII  2 2 OPR  2 ALL ALL
111 TMS 0 0 16 NPDGRP DS1SIG TMS MP ASCII  2 3 OPR  2 ALL ALL
111 TMS 0 0 19 NPDGRP DS1SIG TMS MP ASCII  3 0 IC   2 ALL ALL
112 TMS 0 0 20 NPDGRP DS1SIG TMS MP ASCII  3 1 ASST 2 ALL ALL
113 TMS 0 0 21 NPDGRP DS1SIG TMS MP ASCII  3 2 OPR  2 ALL ALL
114 TMS 0 0 22 NPDGRP DS1SIG TMS MP ASCII  3 3 OPR  2 ALL ALL
115 TMS 0 1  1 NPDGRP DS1SIG TMS MP ASCII  4 0 OPR  2 ALL ALL
116 TMS 0 1  2 NPDGRP DS1SIG TMS MP ASCII  4 1 OPR  2 ALL ALL
117 TMS 0 1  3 NPDGRP DS1SIG TMS MP ASCII  4 2 OPR  2 ALL ALL
118 TMS 0 1  4 NPDGRP DS1SIG TMS MP ASCII  4 3 OPR  2 ALL ALL
119 TMS 0 1  7 NPDGRP DS1SIG TMS MP ASCII  5 0 OPR  2 ALL ALL
120 TMS 0 1  8 NPDGRP DS1SIG TMS MP ASCII  5 1 OPR  2 ALL ALL
121 TMS 0 1  9 NPDGRP DS1SIG TMS MP ASCII  5 2 OPR  2 ALL ALL
122 TMS 0 1 10 NPDGRP DS1SIG TMS MP ASCII  5 3 OPR  2 ALL ALL
123 TMS 0 1 13 NPDGRP DS1SIG TMS MP ASCII  6 0 OPR  2 ALL ALL
124 TMS 0 1 14 NPDGRP DS1SIG TMS MP ASCII  6 1 OPR  2 ALL ALL
125 TMS 0 1 15 NPDGRP DS1SIG TMS MP ASCII  6 2 OPR  2 ALL ALL
126 TMS 0 1 16 NPDGRP DS1SIG TMS MP ASCII  6 3 OPR  2 ALL ALL
127 TMS 0 1 19 NPDGRP DS1SIG TMS MP ASCII  7 0 OPR  2 ALL ALL
128 TMS 0 1 20 NPDGRP DS1SIG TMS MP ASCII  7 1 OPR  2 ALL ALL
129 TMS 0 1 21 NPDGRP DS1SIG TMS MP ASCII  7 2 OPR  2 ALL ALL
130 TMS 0 1 22 NPDGRP DS1SIG TMS MP ASCII  7 3 OPR  2 ALL ALL
131 TMS 0 2  1 NPDGRP DS1SIG TMS MP ASCII  8 0 OPR  2 ALL ALL
132 TMS 0 2  2 NPDGRP DS1SIG TMS MP ASCII  8 1 OPR 2 ALL ALL
133 TMS 0 2  3 NPDGRP DS1SIG TMS MP ASCII  8 2 OPR 2 ALL ALL
134 TMS 0 2  4 NPDGRP DS1SIG TMS MP ASCII  8 3 OPR 2 ALL ALL
135 TMS 0 2  7 NPDGRP DS1SIG TMS MP ASCII  9 0 OPR 2 ALL ALL
136 TMS 0 2  8 NPDGRP DS1SIG TMS MP ASCII  9 1 OPR 2 ALL ALL
137 TMS 0 2  9 NPDGRP DS1SIG TMS MP ASCII  9 2 OPR 2 ALL ALL
138 TMS 0 2 10 NPDGRP DS1SIG TMS MP ASCII  9 3 OPR 2 ALL ALL
139 TMS 0 2 13 NPDGRP DS1SIG TMS MP ASCII 10 0 OPR 2 ALL ALL
140 TMS 0 2 14 NPDGRP DS1SIG TMS MP ASCII 10 1 OPR 2 ALL ALL
141 TMS 0 2 15 NPDGRP DS1SIG TMS MP ASCII 10 2 OPR 2 ALL ALL
```

TOPS DA Subtending TMS (continued)

MAP display example for table TOPSPOS (continued)

```
142 TMS 0 2 16 NPDGRP DS1SIG TMS MP ASCII 10 3 OPR 2 ALL ALL
143 TMS 0 2 19 NPDGRP DS1SIG TMS MP ASCII 11 0 OPR 2 ALL ALL
144 TMS 0 2 20 NPDGRP DS1SIG TMS MP ASCII 11 1 OPR 2 ALL ALL
145 TMS 0 2 21 NPDGRP DS1SIG TMS MP ASCII 11 2 OPR 2 ALL ALL
146 TMS 0 2 22 NPDGRP DS1SIG TMS MP ASCII 11 3 OPR 2 ALL ALL
147 TMS 0 3  1 NPDGRP DS1SIG TMS MP ASCII 12 0 OPR 2 ALL ALL
148 TMS 0 3  2 NPDGRP DS1SIG TMS MP ASCII 12 1 OPR 2 ALL ALL
149 TMS 0 3  3 NPDGRP DS1SIG TMS MP ASCII 12 2 OPR 2 ALL ALL
150 TMS 0 3  4 NPDGRP DS1SIG TMS MP ASCII 12 3 OPR 2 ALL ALL
151 TMS 0 3  7 NPDGRP DS1SIG TMS MP ASCII 13 0 OPR 2 ALL ALL
152 TMS 0 3  8 NPDGRP DS1SIG TMS MP ASCII 13 1 OPR 2 ALL ALL
153 TMS 0 3  9 NPDGRP DS1SIG TMS MP ASCII 13 2 OPR 2 ALL ALL
154 TMS 0 3 10 NPDGRP DS1SIG TMS MP ASCII 13 3 OPR 2 ALL ALL
155 TMS 0 3 13 NPDGRP DS1SIG TMS MP ASCII 14 0 OPR 2 ALL ALL
156 TMS 0 3 14 NPDGRP DS1SIG TMS MP ASCII 14 1 OPR 2 ALL ALL
157 TMS 0 3 15 NPDGRP DS1SIG TMS MP ASCII 15 2 OPR 2 ALL ALL
158 TMS 0 3 16 NPDGRP DS1SIG TMS MP ASCII 15 3 OPR 2 ALL ALL
159 TMS 0 3 19 NPDGRP DS1SIG TMS MP ASCII 15 0 OPR 2 ALL ALL
160 TMS 0 3 20 NPDGRP DS1SIG TMS MP ASCII 15 1 OPR 2 ALL ALL
161 TMS 0 3 21 NPDGRP DS1SIG TMS MP ASCII 15 2 OPR 2 ALL ALL
162 TMS 0 3 22 NPDGRP DS1SIG TMS MP ASCII 15 3 OPR 2 ALL ALL
```

Table SPECCONN for TOPS MP CCI DA and TOPS MPX IBM DA

This datafill reflects the new TMS data link assignment rules for TOPS MP CCI DA and MPX IBM DA applications.

TOPS DA Subtending TMS (continued)

MAP display example for table SPECCONN

```
ENDPT1                          ENDPT2
-----------------------------  --------------------------------
 DS1   TMS    0      0      5  DCHCHNL   0   1     CON ACTIVE
 DS1   TMS    0      0      6  DCHCHNL   1  14     CON ACTIVE
 DS1   TMS    0      0     11  DCHCHNL   1   1     CON ACTIVE
 DS1   TMS    0      0     12  DCHCHNL   0  14     CON ACTIVE
 DS1   TMS    0      0     17  DCHCHNL   2   1     CON ACTIVE
 DS1   TMS    0      0     18  DCHCHNL   0  18     CON ACTIVE
 DS1   TMS    0      0     23  DCHCHNL   3   1     CON ACTIVE
 DS1   TMS    0      0     24  DCHCHNL   0  22     CON ACTIVE
 DS1   TMS    0      1      5  DCHCHNL   0   5     CON ACTIVE
 DS1   TMS    0      1      6  DCHCHNL   2  14     CON ACTIVE
 DS1   TMS    0      1     11  DCHCHNL   1   5     CON ACTIVE
 DS1   TMS    0      1     12  DCHCHNL   2  18     CON ACTIVE
 DS1   TMS    0      1     17  DCHCHNL   2   5     CON ACTIVE
 DS1   TMS    0      1     18  DCHCHNL   1  18     CON ACTIVE
 DS1   TMS    0      1     23  DCHCHNL   3   5     CON ACTIVE
 DS1   TMS    0      1     24  DCHCHNL   1  22     CON ACTIVE
 DS1   TMS    0      2      5  DCHCHNL   0   9     CON ACTIVE
 DS1   TMS    0      2      6  DCHCHNL   3  14     CON ACTIVE
 DS1   TMS    0      2     11  DCHCHNL   1   9     CON ACTIVE
 DS1   TMS    0      2     12  DCHCHNL   3  18     CON ACTIVE
 DS1   TMS    0      2     17  DCHCHNL   2   9     CON ACTIVE
 DS1   TMS    0      2     18  DCHCHNL   3  22     CON ACTIVE
 DS1   TMS    0      2     23  DCHCHNL   3   9     CON ACTIVE
 DS1   TMS    0      2     24  DCHCHNL   2  22     CON ACTIVE
 DS1   TMS    0      3      5  DCHCHNL   0   2     CON ACTIVE
 DS1   TMS    0      3      6  DCHCHNL   1  13     CON ACTIVE
 DS1   TMS    0      3     11  DCHCHNL   1   2     CON ACTIVE
 DS1   TMS    0      3     12  DCHCHNL   0  13     CON ACTIVE
 DS1   TMS    0      3     17  DCHCHNL   2   2     CON ACTIVE
 DS1   TMS    0      3     18  DCHCHNL   0  17     CON ACTIVE
 DS1   TMS    0      3     23  DCHCHNL   3   2     CON ACTIVE
 DS1   TMS    0      3     24  DCHCHNL   0  21     CON ACTIVE
 DS1   TMS    0      4      5  DCHCHNL   0   6     CON ACTIVE
 DS1   TMS    0      4      6  DCHCHNL   2  13     CON ACTIVE
 DS1   TMS    0      4     11  DCHCHNL   1   6     CON ACTIVE
 DS1   TMS    0      4     12  DCHCHNL   2  17     CON ACTIVE
```

TOPS DA Subtending TMS (continued)

MAP display example for table SPECCONN (continued)

```
ENDPT1                          ENDPT2
------------------------------  ------------------------------
 DS1   TMS    0      4     17  DCHCHNL   2   6     CON ACTIVE
 DS1   TMS    0      4     18  DCHCHNL   1  17     CON ACTIVE
 DS1   TMS    0      4     23  DCHCHNL   3   6     CON ACTIVE
 DS1   TMS    0      4     24  DCHCHNL   1  21     CON ACTIVE
 DS1   TMS    0      5      5  DCHCHNL   0  10     CON ACTIVE
 DS1   TMS    0      5      6  DCHCHNL   3  13     CON ACTIVE
 DS1   TMS    0      5     11  DCHCHNL   1  10     CON ACTIVE
 DS1   TMS    0      5     12  DCHCHNL   3  17     CON ACTIVE
 DS1   TMS    0      5     17  DCHCHNL   2  10     CON ACTIVE
 DS1   TMS    0      5     18  DCHCHNL   3  21     CON ACTIVE
 DS1   TMS    0      5     23  DCHCHNL   3  10     CON ACTIVE
 DS1   TMS    0      5     24  DCHCHNL   2  21     CON ACTIVE
 DS1   TMS    0      6      1  DCHCHNL   0  25     CON ACTIVE
 DS1   TMS    0      6      2  DCHCHNL   1  25     CON ACTIVE
 DS1   TMS    0      6      3  DCHCHNL   2  25     CON ACTIVE
 DS1   TMS    0      6      4  DCHCHNL   3  25     CON ACTIVE
 DS1   TMS    0      8      1  DCHCHNL   0  26     CON ACTIVE
 DS1   TMS    0      8      2  DCHCHNL   1  26     CON ACTIVE
 DS1   TMS    0      8      3  DCHCHNL   2  26     CON ACTIVE
 DS1   TMS    0      8      4  DCHCHNL   3  26     CON ACTIVE
 DS1   TMS    0      7      1  DCHCHNL   0   3     CON ACTIVE
 DS1   TMS    0      9      1  DCHCHNL   3   3     CON ACTIVE
 DS1   TMS    0     10      1  DCHCHNL   0   7     CON ACTIVE
 DS1   TMS    0     11      1  DCHCHNL   1   7     CON ACTIVE
 DS1   TMS    0     10      2  DCHCHNL   0  11     CON ACTIVE
 DS1   TMS    0     11      2  DCHCHNL   2  11     CON ACTIVE
 DS1   TMS    0     10      3  DCHCHNL   1  11     CON ACTIVE
 DS1   TMS    0     11      3  DCHCHNL   3  11     CON ACTIVE
 DS1   TMS    0     10      4  DCHCHNL   2   7     CON ACTIVE
 DS1   TMS    0     11      4  DCHCHNL   3   7     CON ACTIVE
```

Note 1: DCHCHNL 0 7, DCHCHNL 1 7, DCHCHNL 0 11, DCHCHNL 2 11, DCHCHNL 1 11, DCHCHNL 3 11, DCHCHNL 2 7, and DCHCHNL 3 7 are inter-DCH links.

Note 2: DCHCHNL 0 25, DCHCHNL 1 25, DCHCHNL 2 25, DCHCHNL 3 25, DCHCHNL 0 26, DCHCHNL 1 26, DCHCHNL 2 26, and DCHCHNL 3 26 are DA links.

Note 3: DCHCHNL 0 3 and DCHCHNL 3 3 are ORDB links.

Table SPECCONN for TOPS MP IBM DA

This datafill reflects the new TMS data link assignment rules for TOPS MP IBM DA.

TOPS DA Subtending TMS (continued)

MAP display example for table SPECCONN for TOPS MP IBM DA

```
ENDPT1             ENDPT2
------------     ------------------------
DCHCHNL 0 1    DS1 TMS 0 0 1 CON ACTIVE
DCHCHNL 0 9    DS1 TMS 0 0 4 CON ACTIVE
DCHCHNL 0 10   DS1 TMS 0 0 6 CON ACTIVE
DCHCHNL 0 23   DS1 TMS 0 0 8 CON ACTIVE
DCHCHNL 1 1    DS1 TMS 0 0 3 CON ACTIVE
DCHCHNL 1 9    DS1 TMS 0 0 2 CON ACTIVE
DCHCHNL 2 1    DS1 TMS 0 0 5 CON ACTIVE
DCHCHNL 3 1    DS1 TMS 0 0 7 CON ACTIVE
DCHCHNL 0 6    DS1 TMS 0 1 1 CON ACTIVE
DCHCHNL 1 6    DS1 TMS 0 1 3 CON ACTIVE
DCHCHNL 1 14   DS1 TMS 0 1 6 CON ACTIVE
DCHCHNL 1 27   DS1 TMS 0 1 8 CON ACTIVE
DCHCHNL 2 6    DS1 TMS 0 1 5 CON ACTIVE
DCHCHNL 2 13   DS1 TMS 0 1 2 CON ACTIVE
DCHCHNL 2 14   DS1 TMS 0 1 4 CON ACTIVE
DCHCHNL 3 6    DS1 TMS 0 1 7 CON ACTIVE
DCHCHNL 0 5    DS1 TMS 0 2 1 CON ACTIVE
DCHCHNL 0 13   DS1 TMS 0 2 4 CON ACTIVE
DCHCHNL 0 14   DS1 TMS 0 2 6 CON ACTIVE
DCHCHNL 0 27   DS1 TMS 0 2 8 CON ACTIVE
DCHCHNL 1 5    DS1 TMS 0 2 3 CON ACTIVE
DCHCHNL 1 13   DS1 TMS 0 2 2 CON ACTIVE
DCHCHNL 2 5    DS1 TMS 0 2 5 CON ACTIVE
DCHCHNL 3 5    DS1 TMS 0 2 7 CON ACTIVE
DCHCHNL 0 15   DS1 TMS 0 3 1 CON ACTIVE
DCHCHNL 1 15   DS1 TMS 0 3 3 CON ACTIVE
DCHCHNL 2 15   DS1 TMS 0 3 5 CON ACTIVE
DCHCHNL 2 23   DS1 TMS 0 3 8 CON ACTIVE
DCHCHNL 3 9    DS1 TMS 0 3 2 CON ACTIVE
DCHCHNL 3 10   DS1 TMS 0 3 4 CON ACTIVE
DCHCHNL 3 15   DS1 TMS 0 3 7 CON ACTIVE
DCHCHNL 3 23   DS1 TMS 0 3 6 CON ACTIVE
DCHCHNL 0 2    DS1 TMS 0 4 1 CON ACTIVE
DCHCHNL 1 2    DS1 TMS 0 4 3 CON ACTIVE
DCHCHNL 1 10   DS1 TMS 0 4 6 CON ACTIVE
DCHCHNL 1 23   DS1 TMS 0 4 8 CON ACTIVE
DCHCHNL 2 2    DS1 TMS 0 4 5 CON ACTIVE
DCHCHNL 2 9    DS1 TMS 0 4 2 CON ACTIVE
DCHCHNL 2 10   DS1 TMS 0 4 4 CON ACTIVE
DCHCHNL 3 2    DS1 TMS 0 4 7 CON ACTIVE
```

TOPS DA Subtending TMS (continued)

MAP display example for table SPECCONN for TOPS MP IBM DA (continued)

```
ENDPT1       ENDPT2
-------------   ------------------------
 DCHCHNL 0 19   DS1 TMS 0 5 1 CON ACTIVE
 DCHCHNL 1 19   DS1 TMS 0 5 3 CON ACTIVE
 DCHCHNL 2 19   DS1 TMS 0 5 5 CON ACTIVE
 DCHCHNL 2 27   DS1 TMS 0 5 8 CON ACTIVE
 DCHCHNL 3 13   DS1 TMS 0 5 2 CON ACTIVE
 DCHCHNL 3 14   DS1 TMS 0 5 4 CON ACTIVE
 DCHCHNL 3 19   DS1 TMS 0 5 7 CON ACTIVE
 DCHCHNL 3 27   DS1 TMS 0 5 6 CON ACTIVE
 DCHCHNL 0 17   DS1 TMS 0 6 1 CON ACTIVE
 DCHCHNL 0 18   DS1 TMS 0 6 2 CON ACTIVE
 DCHCHNL 1 18   DS1 TMS 0 6 4 CON ACTIVE
 DCHCHNL 1 31   DS1 TMS 0 6 5 CON ACTIVE
 DCHCHNL 2 31   DS1 TMS 0 6 6 CON ACTIVE
 DCHCHNL 3 17   DS1 TMS 0 6 3 CON ACTIVE
 DCHCHNL 0 3    DS1 TMS 0 7 1 CON ACTIVE
 DCHCHNL 1 17   DS1 TMS 0 8 1 CON ACTIVE
 DCHCHNL 2 17   DS1 TMS 0 8 2 CON ACTIVE
 DCHCHNL 0 31   DS1 TMS 0 8 3 CON ACTIVE
 DCHCHNL 2 18   DS1 TMS 0 8 4 CON ACTIVE
 DCHCHNL 3 18   DS1 TMS 0 8 5 CON ACTIVE
 DCHCHNL 3 31   DS1 TMS 0 8 6 CON ACTIVE
 DCHCHNL 3 3    DS1 TMS 0 9 1 CON ACTIVE
 DCHCHNL 1 7    DS1 TMS 0 10 1 CON ACTIVE
 DCHCHNL 2 11   DS1 TMS 0 10 2 CON ACTIVE
 DCHCHNL 3 7    DS1 TMS 0 10 4 CON ACTIVE
 DCHCHNL 3 11   DS1 TMS 0 10 3 CON ACTIVE
 DCHCHNL 0 7    DS1 TMS 0 11 1 CON ACTIVE
 DCHCHNL 0 11   DS1 TMS 0 11 2 CON ACTIVE
 DCHCHNL 1 11   DS1 TMS 0 11 3 CON ACTIVE
 DCHCHNL 2 7    DS1 TMS 0 11 4 CON ACTIVE
```

TOPS DA Subtending TMS (continued)

Title text

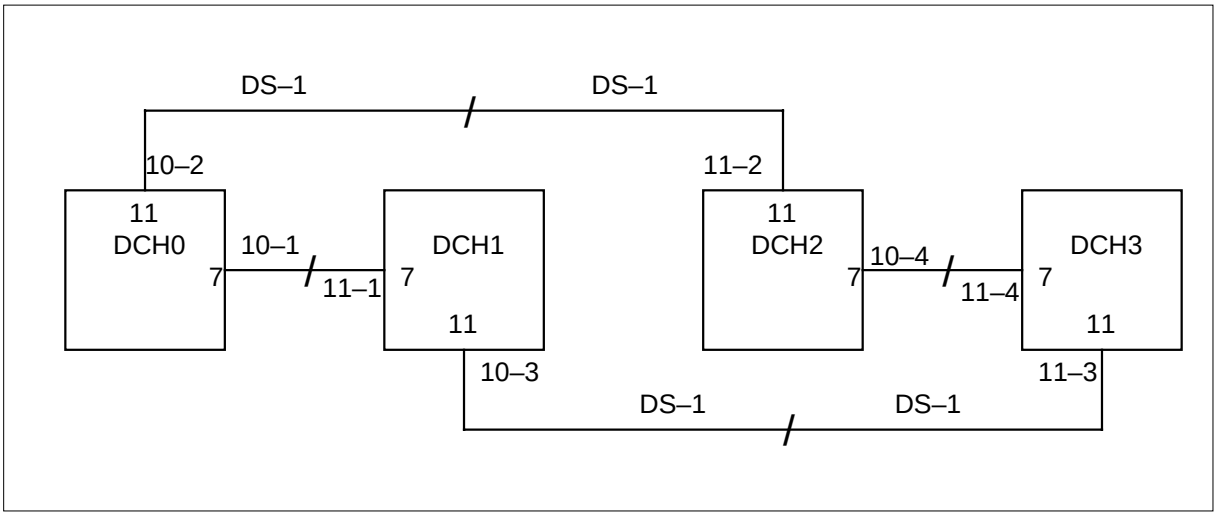

Note 1: Inter-DCH link assignments for ORDB.

Note 2: DS-1s are hardwired back to back.

Note 3: DCH channel numbers are denoted in boxes.

Note 4: 10-2 denotes DS-1 and channel number on TMS.

Database optionality

The TMS does not support more than 96 operators regardless whether the DA or/and ORDB are configured or not.

X.25 Protocol parameters (CCI DA)

The following sections specify the layer 2 and 3 parameters of the X.25 links of the DCH/TMS for connection to CCI DAS. Different sets of parameters are provided for Average link, Medium link and Extreme link. These link types are defined in terms of the noise ratio that can be obtained from the DCH Operation Measurement (OM).

Please refer to table MPCLINK in the data schema section for the default values of the rest of L2 and L3 parameters.

TOPS DA Subtending TMS (continued)

Level 2 - Average link

Parameters	Values
Window Size(201)	7
Modulo(202)	8
Term Type(203)	1(DCE)
N2(204)	2
T1(205)	2 seconds
T2(207)	1.5 seconds
T3(209)	2.5 seconds
T4(211)	10 seconds

Level 2 - Medium link

Parameters	Values
Window Size(201)	7
Modulo(202)	8
Term Type(203)	1(DCE)
N2(204)	4
T1(205)	4 seconds
T2(207)	3 seconds
T3(209)	5 seconds
T4(211)	20 seconds

Level 2 - Extreme link

Parameters	Values
Window Size(201)	7
Modulo(202)	8
Term Type(203)	1(DCE)
N2(204)	8
T1(205)	8 seconds
T2(207)	6 seconds
T3(209)	10 seconds
T4(211)	40 seconds

For any type of link, the parameter Term Type is set to 0 (DTE) for the following links for the purpose of inter-DCH communication:

- DCH 1, Link 16 and 17
- DCH 2, Link 16 and 17

Level 3 - Average Link

Parameters	Values
Window Size(301)	2
Modulo(302)	8
Packet Size(303)	8(256 bytes)
Throughput(304)	8
Number of PVCs(305)	0
T20(309)	18 seconds
R20(310)	1
T21(311)	20 seconds
T22(312)	18 seconds
R22(313)	1
T23(314)	18 seconds
R23(315)	1
T25(316)	7 seconds
R25(317)	0
T26(318)	18 seconds
L3 ACK(319)	–1(not used)
L3 D Bit(320)	0

TOPS DA Subtending TMS (continued)

Level 3 - Medium Link

Parameters	Values
Window Size(301)	2
Modulo(302)	8
Packet Size(303)	8(256 bytes)
Throughput(304)	8
Number of PVCs(305)	0
T20(309)	38 seconds
R20(310)	2
T21(311)	40 seconds
T22(312)	36 seconds
R22(313)	2
T23(314)	36 seconds
R23(315)	2
T25(316)	7 seconds
R25(317)	0
T26(318)	36 seconds
L3 ACK(319)	–1(not used)
L3 D Bit(320)	0

Level 3 - Extreme Link

Parameters	Values
Window Size(301)	2
Modulo(302)	8
Packet Size(303)	8(256 bytes)
Throughput(304)	8
Number of PVCs(305)	0
T20(309)	72 seconds
R20(310)	4
T21(311)	80 seconds
T22(312)	72 seconds
R22(313)	4
T23(314)	72 seconds
R23(315)	4
T25(316)	7 seconds
R25(317)	0
T26(318)	72 seconds
L3 ACK(319)	–1(not used)
L3 D Bit(320)	0

TOPS DA Subtending TMS (continued)

DNX option

So far, all the datafill described in this document is for the office without DNX. For those offices equipped with DNX, two T1 trunks can be saved on the database connection. The only datafill changes are described as follows:

MAP display example for table TMSPSDEV for TOPS MP CCI DA and TOPS MPX IBM DA

```
DEVNAME    TMS NO     CKTTAB
-------   --------   ------------------
DA 1         0        7 CHNLS 1 2 3 4
DA 2         0        9 CHNLS 1 2 3 4
ORDB 1       0        7 CHNLS 5
ORDB 2       0        9 CHNLS 5
ORDB 10      0        10 CHNLS 1 2 3 4
ORDB 11      0        11 CHNLS 1 2 3 4
```

Note: As indicated in the table, circuit 6 and 8 are saved.

MAP display example for table TMSPSDEV for IBM DA

```
DEVNAME    TMS NO     CKTTAB
--------   -------   --------------------
DA 1         0        7 CHNLS 1 2 3 4 5 6
DA 2         0        9 CHNLS 1 2 3 4 5 6
ORDB 1       0        7 CHNLS 7
ORDB 2       0        9 CHNLS 7
ORDB 10      0        10 CHNLS 1 2 3 4
ORDB 11      0        11 CHNLS 1 2 3 4
```

TOPS DA Subtending TMS (continued)

MAP display example for table SPECCONN for TOPS MP CCI DA and TOPS MPX IBM DA with DNX

```
ENDPT1                                ENDPT2
_____________________________________ ____________________________________
 DS1   TMS    0      0      5  DCHCHNL   0   1     CON ACTIVE
 DS1   TMS    0      0      6  DCHCHNL   1  14     CON ACTIVE
 DS1   TMS    0      0     11  DCHCHNL   1   1     CON ACTIVE
 DS1   TMS    0      0     12  DCHCHNL   0  14     CON ACTIVE
 DS1   TMS    0      0     17  DCHCHNL   2   1     CON ACTIVE
 DS1   TMS    0      0     18  DCHCHNL   0  18     CON ACTIVE
 DS1   TMS    0      0     23  DCHCHNL   3   1     CON ACTIVE
 DS1   TMS    0      0     24  DCHCHNL   0  22     CON ACTIVE
 DS1   TMS    0      1      5  DCHCHNL   0   5     CON ACTIVE
 DS1   TMS    0      1      6  DCHCHNL   2  14     CON ACTIVE
 DS1   TMS    0      1     11  DCHCHNL   1   5     CON ACTIVE
 DS1   TMS    0      1     12  DCHCHNL   2  18     CON ACTIVE
 DS1   TMS    0      1     17  DCHCHNL   2   5     CON ACTIVE
 DS1   TMS    0      1     18  DCHCHNL   1  18     CON ACTIVE
 DS1   TMS    0      1     23  DCHCHNL   3   5     CON ACTIVE
 DS1   TMS    0      1     24  DCHCHNL   1  22     CON ACTIVE
 DS1   TMS    0      2      5  DCHCHNL   0   9     CON ACTIVE
 DS1   TMS    0      2      6  DCHCHNL   3  14     CON ACTIVE
 DS1   TMS    0      2     11  DCHCHNL   1   9     CON ACTIVE
 DS1   TMS    0      2     12  DCHCHNL   3  18     CON ACTIVE
 DS1   TMS    0      2     17  DCHCHNL   2   9     CON ACTIVE
 DS1   TMS    0      2     18  DCHCHNL   3  22     CON ACTIVE
 DS1   TMS    0      2     23  DCHCHNL   3   9     CON ACTIVE
 DS1   TMS    0      2     24  DCHCHNL   2  22     CON ACTIVE
 DS1   TMS    0      3      5  DCHCHNL   0   2     CON ACTIVE
 DS1   TMS    0      3      6  DCHCHNL   1  13     CON ACTIVE
 DS1   TMS    0      3     11  DCHCHNL   1   2     CON ACTIVE
 DS1   TMS    0      3     12  DCHCHNL   0  13     CON ACTIVE
 DS1   TMS    0      3     17  DCHCHNL   2   2     CON ACTIVE
 DS1   TMS    0      3     18  DCHCHNL   0  17     CON ACTIVE
 DS1   TMS    0      3     23  DCHCHNL   3   2     CON ACTIVE
 DS1   TMS    0      3     24  DCHCHNL   0  21     CON ACTIVE
 DS1   TMS    0      4      5  DCHCHNL   0   6     CON ACTIVE
 DS1   TMS    0      4      6  DCHCHNL   2  13     CON ACTIVE
 DS1   TMS    0      4     11  DCHCHNL   1   6     CON ACTIVE
 DS1   TMS    0      4     12  DCHCHNL   2  17     CON ACTIVE
 DS1   TMS    0      4     17  DCHCHNL   2   6     CON ACTIVE
 DS1   TMS    0      4     18  DCHCHNL   1  17     CON ACTIVE
 DS1   TMS    0      4     23  DCHCHNL   3   6     CON ACTIVE
```

TOPS DA Subtending TMS (continued)

MAP display example for table SPECCONN for TOPS MP CCI DA and TOPS MPX IBM DA with DNX (continued)

```
ENDPT1                                ENDPT2
_____________________________________ ____________________________________
 DS1   TMS    0      4     24  DCHCHNL   1  21     CON ACTIVE
 DS1   TMS    0      5      5  DCHCHNL   0  10     CON ACTIVE
 DS1   TMS    0      5      6  DCHCHNL   3  13     CON ACTIVE
 DS1   TMS    0      5     11  DCHCHNL   1  10     CON ACTIVE
 DS1   TMS    0      5     12  DCHCHNL   3  17     CON ACTIVE
 DS1   TMS    0      5     17  DCHCHNL   2  10     CON ACTIVE
 DS1   TMS    0      5     18  DCHCHNL   3  21     CON ACTIVE
 DS1   TMS    0      5     23  DCHCHNL   3  10     CON ACTIVE
 DS1   TMS    0      5     24  DCHCHNL   2  21     CON ACTIVE
 DS1   TMS    0      7      1  DCHCHNL   0  25     CON ACTIVE
 DS1   TMS    0      7      2  DCHCHNL   1  25     CON ACTIVE
 DS1   TMS    0      7      3  DCHCHNL   2  25     CON ACTIVE
 DS1   TMS    0      7      4  DCHCHNL   3  25     CON ACTIVE
 DS1   TMS    0      9      1  DCHCHNL   0  26     CON ACTIVE
 DS1   TMS    0      9      2  DCHCHNL   1  26     CON ACTIVE
 DS1   TMS    0      9      3  DCHCHNL   2  26     CON ACTIVE
 DS1   TMS    0      9      4  DCHCHNL   3  26     CON ACTIVE
 DS1   TMS    0      7      5  DCHCHNL   0   3     CON ACTIVE
 DS1   TMS    0      9      5  DCHCHNL   3   3     CON ACTIVE
 DS1   TMS    0     10      1  DCHCHNL   0   7     CON ACTIVE
 DS1   TMS    0     11      1  DCHCHNL   1   7     CON ACTIVE
 DS1   TMS    0     10      2  DCHCHNL   0  11     CON ACTIVE
 DS1   TMS    0     11      2  DCHCHNL   2  11     CON ACTIVE
 DS1   TMS    0     10      3  DCHCHNL   1  11     CON ACTIVE
 DS1   TMS    0     11      3  DCHCHNL   3  11     CON ACTIVE
 DS1   TMS    0     10      4  DCHCHNL   2   7     CON ACTIVE
 DS1   TMS    0     11      4  DCHCHNL   3   7     CON ACTIVE
```

TOPS DA Subtending TMS (continued)

MAP display example for table SPECCONN for TOPS MP IBM DA with DNX

```
ENDPT1          ENDPT2
_____________   ____________________________
DCHCHNL 0 1     DS1 TMS 0 0 1 CON ACTIVE
DCHCHNL 0 9     DS1 TMS 0 0 4 CON ACTIVE
DCHCHNL 0 10    DS1 TMS 0 0 6 CON ACTIVE
DCHCHNL 0 23    DS1 TMS 0 0 8 CON ACTIVE
DCHCHNL 1 1     DS1 TMS 0 0 3 CON ACTIVE
DCHCHNL 1 9     DS1 TMS 0 0 2 CON ACTIVE
DCHCHNL 2 1     DS1 TMS 0 0 5 CON ACTIVE
DCHCHNL 3 1     DS1 TMS 0 0 7 CON ACTIVE
DCHCHNL 0 6     DS1 TMS 0 1 1 CON ACTIVE
DCHCHNL 1 6     DS1 TMS 0 1 3 CON ACTIVE
DCHCHNL 1 14    DS1 TMS 0 1 6 CON ACTIVE
DCHCHNL 1 27    DS1 TMS 0 1 8 CON ACTIVE
DCHCHNL 2 6     DS1 TMS 0 1 5 CON ACTIVE
DCHCHNL 2 13    DS1 TMS 0 1 2 CON ACTIVE
DCHCHNL 2 14    DS1 TMS 0 1 4 CON ACTIVE
DCHCHNL 3 6     DS1 TMS 0 1 7 CON ACTIVE
DCHCHNL 0 5     DS1 TMS 0 2 1 CON ACTIVE
DCHCHNL 0 13    DS1 TMS 0 2 4 CON ACTIVE
DCHCHNL 0 14    DS1 TMS 0 2 6 CON ACTIVE
DCHCHNL 0 27    DS1 TMS 0 2 8 CON ACTIVE
DCHCHNL 1 5     DS1 TMS 0 2 3 CON ACTIVE
DCHCHNL 1 13    DS1 TMS 0 2 2 CON ACTIVE
DCHCHNL 2 5     DS1 TMS 0 2 5 CON ACTIVE
DCHCHNL 3 5     DS1 TMS 0 2 7 CON ACTIVE
DCHCHNL 0 15    DS1 TMS 0 3 1 CON ACTIVE
DCHCHNL 1 15    DS1 TMS 0 3 3 CON ACTIVE
DCHCHNL 2 15    DS1 TMS 0 3 5 CON ACTIVE
DCHCHNL 2 23    DS1 TMS 0 3 8 CON ACTIVE
DCHCHNL 3 9     DS1 TMS 0 3 2 CON ACTIVE
DCHCHNL 3 10    DS1 TMS 0 3 4 CON ACTIVE
DCHCHNL 3 15    DS1 TMS 0 3 7 CON ACTIVE
DCHCHNL 3 23    DS1 TMS 0 3 6 CON ACTIVE
DCHCHNL 0 2     DS1 TMS 0 4 1 CON ACTIVE
DCHCHNL 1 2     DS1 TMS 0 4 3 CON ACTIVE
DCHCHNL 1 10    DS1 TMS 0 4 6 CON ACTIVE
DCHCHNL 1 23    DS1 TMS 0 4 8 CON ACTIVE
DCHCHNL 2 2     DS1 TMS 0 4 5 CON ACTIVE
DCHCHNL 2 9     DS1 TMS 0 4 2 CON ACTIVE
DCHCHNL 2 10    DS1 TMS 0 4 4 CON ACTIVE
DCHCHNL 3 2     DS1 TMS 0 4 7 CON ACTIVE
DCHCHNL 0 19    DS1 TMS 0 5 1 CON ACTIVE
```

TOPS DA Subtending TMS (continued)

MAP display example for table SPECCONN for TOPS MP IBM DA with DNX (continued)

```
ENDPT1          ENDPT2
_____________   ____________________________
DCHCHNL 1 19    DS1 TMS 0 5 3 CON ACTIVE
DCHCHNL 2 19    DS1 TMS 0 5 5 CON ACTIVE
DCHCHNL 2 27    DS1 TMS 0 5 8 CON ACTIVE
DCHCHNL 3 13    DS1 TMS 0 5 2 CON ACTIVE
DCHCHNL 3 14    DS1 TMS 0 5 4 CON ACTIVE
DCHCHNL 3 19    DS1 TMS 0 5 7 CON ACTIVE
DCHCHNL 3 27    DS1 TMS 0 5 6 CON ACTIVE
DCHCHNL 0 3     DS1 TMS 0 7 7 CON ACTIVE
DCHCHNL 0 17    DS1 TMS 0 7 1 CON ACTIVE
DCHCHNL 0 18    DS1 TMS 0 7 2 CON ACTIVE
DCHCHNL 1 18    DS1 TMS 0 7 4 CON ACTIVE
DCHCHNL 1 31    DS1 TMS 0 7 5 CON ACTIVE
DCHCHNL 2 31    DS1 TMS 0 7 6 CON ACTIVE
DCHCHNL 3 17    DS1 TMS 0 7 3 CON ACTIVE
DCHCHNL 0 31    DS1 TMS 0 9 3 CON ACTIVE
DCHCHNL 1 17    DS1 TMS 0 9 1 CON ACTIVE
DCHCHNL 2 17    DS1 TMS 0 9 2 CON ACTIVE
DCHCHNL 2 18    DS1 TMS 0 9 4 CON ACTIVE
DCHCHNL 3 3     DS1 TMS 0 9 7 CON ACTIVE
DCHCHNL 3 18    DS1 TMS 0 9 5 CON ACTIVE
DCHCHNL 3 31    DS1 TMS 0 9 6 CON ACTIVE
DCHCHNL 1 7     DS1 TMS 0 10 1 CON ACTIVE
DCHCHNL 2 11    DS1 TMS 0 10 2 CON ACTIVE
DCHCHNL 3 7     DS1 TMS 0 10 4 CON ACTIVE
DCHCHNL 3 11    DS1 TMS 0 10 3 CON ACTIVE
DCHCHNL 0 7     DS1 TMS 0 11 1 CON ACTIVE
DCHCHNL 0 11    DS1 TMS 0 11 2 CON ACTIVE
DCHCHNL 1 11    DS1 TMS 0 11 3 CON ACTIVE
DCHCHNL 2 7     DS1 TMS 0 11 4 CON ACTIVE
```

Multiple TMS (MTMS)

Hardware

The additional hardware for the added TMS has the same requirements as any single TMS. A sequential numbering plan is applied, e.g., TMS 0, TMS 1, etc.

Datafill

For TMS internal routing, no change is needed in TMSPVC for any added TMS. TDCDEF needs to add 4 ISGs for each additional TMS. The only difference between the added and the original ISGs is the ISGNO fields. For example, 0, 1 2, 3 are for TMS 0; 4, 5, 6, 7 are for TMS 1.

TOPS DA Subtending TMS (continued)

For the external DS1 channel datafill, the following tables need to be modified:

- LTCINV. A additional tuple needs to be added for each additional TMS.
- DCHINV. For each additional TMS, 4 additional tuples need to be added, and different DCHNO and PMNO should be used.
- ISGDEF. For each additional TMS, 4 additional tuples need to be added, and different ISGNO and PMNO should be used. The ISGNO should be the same as in TDCDEF, respectively.
- TDCDEF . For each additional TMS, 4 tuples need to be added. The datafill pattern for the first 4 ISGs (TMS 0) is repeated with unique ISG numbers defined in ISGDEF.
- TPCINV. Additional tuples need to be added for the added TPCs. TPCs must be uniquely numbered. Recommended numbering scheme is as follows:

TPC	TPC #
0	0–23
1	24–47
2	48–71
3	72–95, etc.

- TMSPSDEV. For each additional TMS, 6 additional tuples need to be added, and different device number in DEVNAME field, TMSNO field and circuit number in CKTTAB field should be used.
- SPECCONN. Additional end points connection tuples need to be added for additional DS 0 channels (actually, 2 additional tuples are needed for each additional TPC). Different ISG and TMS numbers should be used for each additional TMS.

  Note: The SPECCONN data size in table DATASIZE should be increased accordingly (usually 2 times the number of TMS SPECCONN connections). In table DATASIZE, we recommend adding 132 to the SPECCONN tuple, for each TMS in the office.

TOPS DA Subtending TMS (continued)

Sample TMS Port Assignment Worksheet

TMS PORT ASSIGNMENTS (MP or MPX)

TMS # _____ PORT #_____(0–5)

CHANNEL #	POSITION #	TYPE	ASST	TOKEN RING #	TPC # (TPCINV)
1	**POS**				
2	**POS**				
3	**POS**				
4	**POS**				
5	**DATA**				
6	**DATA**				
7	**POS**				
8	**POS**				
9	**POS**				
10	**POS**				
11	**DATA**				
12	**DATA**				
13	**POS**				
14	**POS**				
15	**POS**				
16	**POS**				
17	**DATA**				
18	**DATA**				
19	**POS**				
20	**POS**				
21	**POS**				
22	**POS**				
23	**DATA**				
24	**DATA**				

Notes:

Position # – 1–9999 (Field POSNO in table TOPSPOS)
Type – 1–3 (MPX only)
Asst – IC, ASST or OPR
Token Ring # – 40–7F [used in MPX utility DEFPOS (NPID); MPX only]
TPC # – 0–254 (Field TPCNO in table TPCINV; MP only)

TOPS DA Subtending TMS (continued)

Translations table flow

The TOPS DA Subtending TMS translation process appears in the flowchart that follows.

Table flow for TOPS DA Subtending TMS

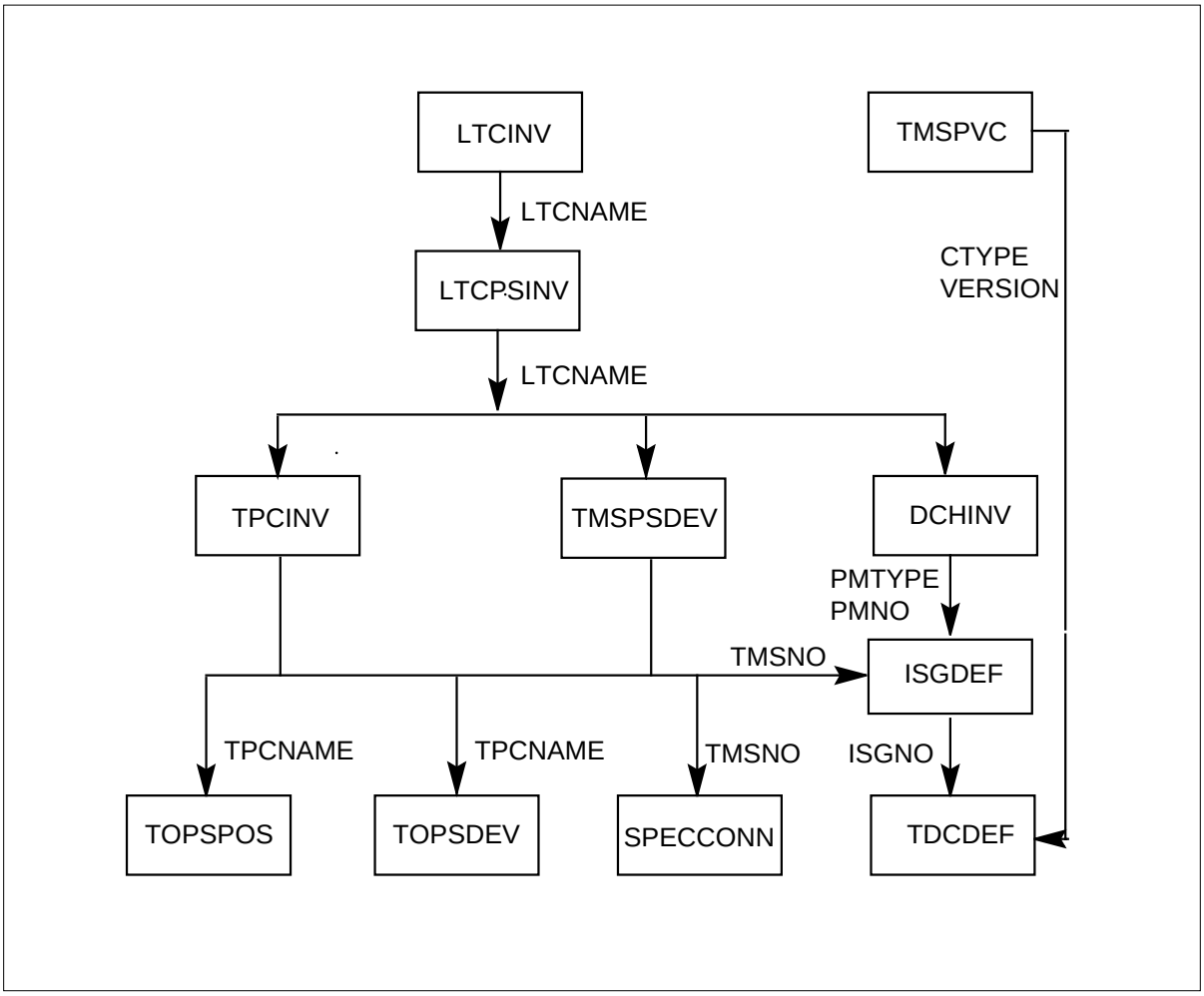

Limits

The following limits apply to TOPS DA Subtending TMS:

- Four TOPS position controller (TPC) for each DS1 link can be present.
- The data entry of four MPs for each TPC can occur.
- For TMS P-side devices to subtend multiple TMSs, the devices must appear as separate entities. The data entry of the devices must occur multiple times. Entry of the devices must occur one time for each TMS.

- You cannot change the TMS P-side devices. Delete the TMS P-side devices and add the devices again to change the TMS P-side devices.
- Table TMSPVC is a write-protected table that you cannot change.
- You cannot perform D-channel handler (DCH) sparing from the MAP for TMS.
- The MSG6x69 card is a requirement.
- The DTCEX is the correct exec-lineup for TMS. Enter exec-lineups in field EXECTAB of table LTCINV.
- The DS30As are not correct for the P-side of a TMS. Do not enter the DS30s. Software does not enforce this restriction.
- In table DCHINV, TDC in field SERVICE is correct when the PM_TYPE is TMS.
- In table DCHINV, TDC in field CHNL_TYPE is correct when the PM_TYPE is TMS and SERVICE is TDC.
- If the PM is a TMS, fields SERVICE and CHNL_TYPE must be TDC.
- Number of operators.
- You cannot make changes to field CLUSTRSZ in table TPCINV. To change the value of this field, delete the entire TPCINV tuple and add the tuple again with the new value for CLUSTRSZ.

AF2395 - TOPS DA Subtending TMS

This feature provides for a dedicated directory assistance (DA) terminal. The DA service this terminal provides does not have all the abilities of the DA service that a TOPS MP terminal provides. The charge for the DA call must apply to the calling party if the call is billable. Operator handled DA call completion is not available.

Limits apply to the functionality of integrated maintenance that the TMS supports when subtending dedicated DA terminals. When failures occur, error codes do not return. Operating company personnel must take the action that the manufacturer of the terminal specifies for the attempted function. Refer to the documentation of the terminal manufacturer for the maintenance interactions.

Interactions

The actions between TOPS DA Subtending TMS and other functionalities appear in the following paragraphs.

When feature AF3003 (TOPS Increased Multiplexing,OSB00101, is present, you can enter data in the new field CLUSTRSZ in table TPCINV. The

TOPS DA Subtending TMS (continued)

maximum value for this field is 20. When this feature is not present, you can enter CLUSTRSZ with a value that is not greater than four.

AF2395 - TOPS DA Subtending TMS

This feature interacts with the following areas:

- Two Terminal Directory Assistance/Intercept
- TMS
- Directory Assistance/Intercept Service
- DA Call Completion

An office that contains dedicated DA terminals can provide automatic DA Call Completion. The office must contain positions that can provide toll and assist service.

Activation/deactivation by the end user

The TOPS DA Subtending TMS does not require activation or deactivation by the end user.

Billing

The TOPS DA Subtending TMS does not affect billing.

Station Message Detail Recording

The TOPS DA Subtending TMS does not affect Station Message Detail Recording.

Datafilling office parameters

The TOPS DA Subtending TMS does not affect office parameters.

Datafill sequence

The tables that require datafill to implement TOPS DA Subtending TMS appear in the following table. The tables appear in the correct entry order.

Datafill requirements for TOPS DA Subtending TMS

Table	Purpose of table
DATASIZE	Data Size. This table specifies table size.
CLLI	Common Language Location Identifier. This table identifies the far end of each announcement, tone, trunk group, test trunk, national milliwatt test lines and service circuit.

TOPS DA Subtending TMS (continued)

Datafill requirements for TOPS DA Subtending TMS

Table	Purpose of table
LTCINV	Line Trunk Controller Inventory. Version BCS30 allows a new PMTYPE of TMS. Table LTCINV specifies the CC network links and some circuit packs the Integrated services digital network (ISDN) Line Trunk Controller (LTCI), the base of the TMS uses.
CARRMTC	Carrier Maintenance Control. Enter the characteristics of P-side links in this table at loadbuild time.
LTCPSINV	Line Trunk Controller P-Side Link Inventory. This table associates the TMS P-side ports with the number of DS1 and/or DCH circuit packs provisioned.
TMSPSDEV	The TOPS Message Switch P-Side Device. This table identifies the database devices, DA and ORDB. The table identifies the devices in terms of the TMS number, P-side port and DS1 channels in offices with TOPS MP positions and CCI DA.
TPCINV	The TOPS Position Controller Inventory. For each TPC, table TPCINV identifies the TPC number, the location and the data port and channel.
TMSPVC	The TOPS Message Switch Permanent Virtual Circuit. This write-protected table builds the TMS internal routing of messages between endpoints.
DCHINV	The D-Channel Handler Inventory. This table assigns the DCH number and port number of the TMS shelf to a DCH circuit pack. Tables ISGDEF and TDCDEF use the DCH number.
ISGDEF	The ISDN Service Group Definition. This table specifies the baud rate, data inversion and purpose for each TMS to DCH link.
TOPSPOS	The TOPS Position. This table defines TOPS positions to the switch. Table TOPSPOS specifies the services that a position can provide.
TOPSDEV	The TOPS Device. This table lists the devices that require one trunk circuit for data and identifies the trunk circuit locations.
TDCDEF	The TOPS Message Switch Data Channel Definition. Table TDCDEF and table TMSPVC create the routing information for the TMS DCH.
SPECCONN	The P-Side to P-Side Special Connections. This table defines the special connections of DS1 channels on the TMS to the TMS DCH channels. The TPC, DA, and ORDB interfaceTPC use the TMS.

Datafilling table DATASIZE

Datafill for TOPS DA Subtending TMS for table DATASIZE appears in the following table. The fields that apply to TOPS DA Subtending TMS appear in

TOPS DA Subtending TMS (continued)

this table. See the data schema section of this document for a description of the other fields.

Datafilling table DATASIZE

Field	Entry	Explanation and action
DATSKEY	SPECCONN	This is the name of the table.
SIZE	The default value is 100 in BCS30.	The value for SPECCONN must increase to implement TMS. For offices with TMS, set the value for SPECCONN in table DATASIZE as follows to allow for the TMS entries in the table: `132 * (# of TMS) + Connections for other applications such as ISDN` Use the number of TMSs provisioned for the engineering interval.
Note: For CSP02 and later versions, table DATASIZE does not require tuple SPECCONN. An increase the table size does not require a restart. Before CSP02, the extension of the length of table SPECCONN, required a restart and an increase the size in table DATASIZE.		

Datafill example for table DATASIZE

Sample datafill for table DATASIZE appears in the following example.

MAP example for table DATASIZE

```
DATSKEY      SIZE
_____________________
SPECCONN      287
```

TOPS DA Subtending TMS (continued)

Datafilling table CLLI

Datafill for TOPS DA Subtending TMS for table CLLI appears in the following table. The fields that apply to TOPS DA Subtending TMS appear in this table. See the data schema section of this document for a description of the other fields.

Datafilling table CLLI

Field	Subfield or refinement	Entry	Explanation and action
CLLI		TOPSPOS, TOPSPOSDATA	Offices can add TOPS MP positions to handle directory assistance and intercept traffic. These offices must increase the size of TOPSPOS and TOPSPOSDATA in table CLLI. This action must occur during the BCS upgrade process because changes to field TRKGRSIZ for these CLLIs require a cold restart. The TOPSPOS and TOPSPOSDATA control the maximum number of tuples in table TOPSPOS.

Datafill example for table CLLI

Sample datafill for table CLLI appears in the following example.

MAP example for table CLLI

```
CLLI           ADNUM    TRKGRSIZ    ADMININF
_____________________________________________
TOPSPOS          273           5          MI
TOPSPOSDATA      178          28          MI
```

Datafilling table LTCINV

Datafill for TOPS DA Subtending TMS for table LTCINV appears in the following table. The fields that apply to TOPS DA Subtending TMS appear in this table. See the data schema section of this document for a description of the other fields.

Datafilling table LTCINV

Field	Subfield or refinement	Entry	Explanation and action
PMTYPE		TMS	New PMTYPE of TMS is allowed, beginning in BCS30. Table LTCINV specifies the CC network links and some circuit packs the LTCI uses. The LTCI is the base of the TMS.

TOPS DA Subtending TMS (continued)

Datafill example for table LTCINV

Sample datafill for table LTCINV appears in the following example.

MAP example for table LTCINV

```
LTCNAME   FRTYPE   FRNO   SHOPS   FLOOR   ROW   FRPOS   EQPEC
_______   _______  ____   _____   _____   ___   _____   ______
 TMS 0     LTE      0       18      0      L      2     6X02AA

LOAD      EXECTAB
_______   _____________
TMS30BA   (ABTRK DTCEX)

CSLNKTAB
_____________________________________________________
(0 20)(0 21)(1 18)(1 19)(0 42)(1 44)(0 46)(1 50)


OPTCARD   TONESET    PECS6X45
_______   ________   _____________
MSG6X69   DEFAULT    6X45BA 6X45BA

OPTATTR
_______
 $
```

Datafilling table CARRMTC

Datafill for TOPS DA Subtending TMS for table CARRMTC appears in the following table. The fields that apply to TOPS DA Subtending TMS appear in this table. See the data schema section of this document for a description of the other fields.

Datafilling table CARRMTC

Field	Subfield or refinement	Entry	Explanation and action
CSPMTYPE and SELECTOR		TMS	Operating company personnel enter characteristics of TMS P-side links in table CARRMTC at loadbuild time. This table does not change to support TMS. An exception is that the range of the fields CSPMTYPE, key field and SELECTOR, includes TMS.

Datafilling table LTCPSINV

Datafill for TOPS DA Subtending TMS for table LTCPSINV appears in the following table. The fields that apply to TOPS DA Subtending TMS appear in

this table. See the data schema section of this document for a description of the other fields.

Datafilling table LTCPSINV

Field	Subfield or refinement	Entry	Explanation and action
			This table associates the TMS P-side ports with the number of DS1 and/or DCH circuit packs provisioned.

Datafill example for table LTCPSINV

Sample datafill for table LTCPSINV appears in the following example.

MAP example for table LTCPSINV

```
LTCNAME
_______
 TMS 0

PSLNKTAB
________
(0 DS1 DEFAULT N)(1 DS1 DEFAULT N)(2 DS1 DEFAULT N)
(3 DS1 DEFAULT N)(4 DS1 DEFAULT N)(5 DS1 DEFAULT N)
(6 DS1 DEFAULT N)(7 DS1 DEFAULT N)(8 DS1 DEFAULT N)
(9 DS1 DEFAULT N)(10 DS1 DEFAULT)(11 DS1 DEFAULT)
(12 NILTYPE)(13 DCH)(14 NILTYPE)(15 DCH)(16 NILTYPE)
(17 DCH)(18 NILTYPE)(19 DCH)
```

Datafilling table TMSPSDEV

This table identifies the database devices DA and ORDB in terms of the TMS number, P-side port and DS1 channels in offices. These offices have TOPS MP positions and CCI DA. This table does not require datafill in offices with MPX positions.

The TMSPSDEV for TOPS MP with IBM DA reserves six channels for DA database access on each DS1.

You can assign Field DEVNO an arbitrary number. Maintenance functions on the link use this field.

In BCS33, the removal of datafill limits allow a dynamic update of an in-service TMS. Before BCS33, the removal of an entire TMS out of service had to occur to make changes in this table. Now, you can add or delete DA and ORDB databases from an in-service TMS.

TOPS DA Subtending TMS (continued)

Now the warning that follows does not appear when you make changes:

WARNING

Static data for TMS# is not updated. Perform a BSY and RTS or follow RTS NODATASYNC, COLD SWACT Sequence.

The procedure to change entries in table TMSPSDEV is as follows:

- OFFLINE all DCHCHNLs that connect to the DS1 channels allocated for an entry to delete in table TMSPSDEV.
- DELETE all associated DS1 channels in table SPECCONN.
- ADD or DELETE entries in table TMSPSDEV.
- ADD new DS1 channels in table SPECCONN.
- RTS the DCHCHNLs.

Datafill example for table TMSPSDEV

Sample datafill for table TMSPSDEV appears in the following example.

MAP example for table TMSPSDEV for TOPS MP IBM DA

```
DEVNAME      TMS NO      CKTTAB
---------    -------     --------------------
 DA 1           0        6 CHNLS 1 2 3 4 5 6
 DA 2           0        8 CHNLS 1 2 3 4 5 6
 ORDB 1         0        7 CHNLS 1
 ORDB 2         0        9 CHNLS 1
 ORDB 10        0        10 CHNLS 1 2 3 4
 ORDB 11        0        11 CHNLS 1 2 3 4
```

Note: The ORDB 10 and ORDB 11 are inter-DCH channels.

Datafilling table TPCINV

For each TPC, table TPCINV identifies the TPC number, location and the data port and channel. With TOPS MP, TPCs with two data links each are entered in the table. With MPX, one position acts as a virtual TPC (VPC). Entry of the data link of the VPD occurs in the table. One data link for each VPC is supported with the first MPX offering. In BCS33, two data links are available. Enter two data links with data to acheive the best results.

TOPS DA Subtending TMS (continued)

Enter data in table TPCINV for 96 positions on each TMS. This action eliminates the requirement for two WARM switch of activities (SWACTs) to download data to TMS. This requirement relates to the addition of operators to the first configuration. The use of recommended datafill numbers TPCs in sequence for each TMS. Section 2.4 illustrates this process.

Table TPCINV contains the data links that serve a maximum of four TOPS MP positions off one TPC. Table TPCINV contains a maximum of four MPX positions that a virtual TPC serves. Table TPCINV datafill must coordinate with table TOPSPOS. Table TOPSPOS contains the voice links and identifies a position with a specified TPC. The recommended datafill pattern is to assign links for a group of four positions as follows. The first four channels on a port for voice links and the next two as the corresponding data links. For the next four positions, assign the next four channels as voice links and the next two as data links. The datafill examples in Section 2.4 illustrate this process.

The TPC load name (field LOAD) is an administrative field. You can enter this field with an alphanumeric string. You can obtain the TPC load name from the cover of the documentation that accompanies the TPC loads. The TPC loads are shipped to site.

Enter the TMS number, circuit and timeslot in table SPECCONN. Table SPECCONN establishes the special connections through the DCHs for TPCs and database access, DA and ORDB.

Note 1: The first data link you assign in table TPCINV is the PRIMARY data link for the TPC or VPC. The second data link you assign is the SECONDARY.

Note 2: For the TOPS MP IBM DA and TOPS MP CCI DA applications, link 0 of the HSDA card on the TPC is wired to the first data channel specified for each TPC in table TPCINV.

In BCS33, the removal of datafill limits allows a dynamic update of an in-service TMS. Before BCS33, you had to take a complete TMS out of service to make changes in this table. You can add or delete TPCs from an in-service TMS.

TOPS DA Subtending TMS (continued)

The warning that follows does not appear when you make changes:

WARNING

Static data for TMS# is not updated. Perform a BSY and RTS or follow RTS NODATASYNC, COLD SWACT Sequence.

The procedure to change entries in table TPCINC is as follows.

- DELETE associated entries in table TOPSPOS.
- OFFLINE DCHCHNL that connect to the DS1 channels allocated for an entry to deleted in table TPCINV.
- DELETE associated DS1 channels in table SPECCONN.
- ADD or DELETE entries in table TPCINV.
- ADD new DS1 channels to table SPECCONN.
- RTS the DCHCHNLs.
- ADD new associated entries in table TPCINV.

Datafill example for table TPCINV

Sample datafill for table TPCINV appears in the following example.

MAP example for table TPCINV

```
TPCNAME FRTYPE FRNO SHPOS FLOOR ROW FRPOS LOAD TMSNO
------- ------ ---- ----- ----- --- ----- ---- -----
 TPC 0    PCE    0    0     0    AA   0     0    0

TMSCKTNO  TMSCKTTS  CLUSTRSZ
--------  --------  ---------
   0       (5)(6)        4
```

Datafilling table TMSPVC

This table is a write-protected table. Use this table to build the TMS internal routing of messages between endpoints. The system generates this table at loadbuild in BCS30 with default values through an EXT file.

Beginning with BCS31, table TMSPVC does not contain default data at loadbuild. Enter data in table TMSPVC exactly as the DCH INTERNAL ROUTING DATAFILL section of this bulletin for the specified TMS

application describes. The NTI provides table TMSPVC. The TMSPVC contains the following information:

- Device information
- Number and purpose of the PVCs

Datafill example for table TMSPVC

Sample datafill for table TMSPVC appears in the following example.

Map example for table TMSPVC

```
PVCKEY      PVCTAB
_____________________________
DA 1          (4 TPC 1 0)
```

Datafilling table DCHINV

The datafill for TOPS DA Subtending TMS for table DCHINV appears in the following table. The fields that apply to TOPS DA Subtending TMS appear in this table. See the data schema section of this document for a description of the other fields.

Datafilling table DCHINV

Field	Subfield or refinement	Entry	Explanation and action
			This table assigns the DCH number and the port number of the TMS shelf to a DCH circuit pack. Tables ISGDEF and TDCDEF use the DCH numbers.

Datafill example for table DCHINV

Sample datafill for table DCHINV appears in the following example.

MAP example for table DCHINV

```
DCHNO   PMTYPE  PMNO    DCHPEC   LOAD       PORT
_____   ______  ____    ______   ________   ____
  0       TMS     0     BX02AA   XCH30BA     17
  1       TMS     0     BX02AA   XCH30BA     19
  2       TMS     0     BX02AA   XCH30BA     15
  3       TMS     0     BX02AA   XCH30BA     13
```

TOPS DA Subtending TMS (continued)

Datafilling table ISGDEF

The datafill for TOPS DA Subtending TMS for table ISGDEF appears in the following table. The fields that apply to TOPS DA Subtending TMS appear in this table. See the data schema section of this document for a description of the other fields.

Datafilling table ISGDEF

Field	Subfield or refinement	Entry	Explanation and action
			This table specifies the baud rate, data inversion and purpose for each TMS to DCH link. Datafill for these tuples is identical except for the ISGNOs. The ISGNOs correspond to the DCH numbers in table DCHINV.

Datafill example for table ISGDEF

Sample datafill for table ISGDEF appears in the following example.

MAP example for table ISGDEF

```
ISGNO  PMTYPE  PMNO  SERVICE
_____  _______ ____  ________
  0      TMS     0     TDC

CHNLTAB
_______
(0 RESERVED)(1 TDC 56K OFF)(2 TDC 56K OFF)(3 TDC 56K OFF)
(4 TDC 56K OFF)(5 TDC 56K OFF)(6 TDC 56K OFF)(7 TDC 56K OFF)
(8 TDC 56K OFF)(9 TDC 56K OFF)(10 TDC 56K OFF)(11 TDC 56K OFF)
(12 TDC 56K OFF)(13 TDC 56K OFF)(14 TDC 56K OFF)(15 TDC 56K OFF)
(16 TDC 56K OFF)(17 TDC 56K OFF)(18 TDC 56K OFF)(19 TDC 56K OFF)
(20 TDC 56K OFF)(21 TDC 56K OFF)(22 TDC 56K OFF)(23 TDC 56K OFF)
(24 TDC 56K OFF)(25 TDC 56K OFF)(26 TDC 56K OFF)(27 TDC 56K OFF)
(28 TDC 56K OFF)(29 TDC 56K OFF)(30 TDC 56K OFF)(31 TDC 56K OFF)
```

Datafilling table TOPSPOS

This table is for MPs configured as Toll and Assist, In-Charge, or Assistant. This table identifies the DS1 channels for TPC voice channels of TOPS MP or TOPS MPX. The CLLI, TOPSPOS and TOPSPOSDATA control the number of entries in table TOPSPOS.

This table changes to include fields to specify the TPC and the High Speed Line Interface (HSLI) card to which the MP interfaces. The TPC number is

the same in tables TPCINV and TOPSPOS. Enter data in table TPCINV before you enter the MP.

The system allows a maximum of four MPs on each TPC.

You cannot make changes to current tuples. To make a change to a tuple, delete the tuple and add the tuple again.

If you enter the PMTYPE as TMS and the controller type is TPC, voice and data circuit entries are requirements. This condition applies to datafill for the DTC PMTYPE.

For MPX, IBM supports two data links for each VPC. Assign TPCPOSNO = 0 to the primary data link and TPCPOSNO = 1 to the secondary data link. The system assigns POSITION number to positions with primary VPC data links. The POSITION numbers are a multiple of 4 (0, 4, 8, 12) through DEFPOS in the MPX. The system assigns positions with secondary VPC data links the next sequential position number (1, 5, 9, 13).

Datafilling table TOPSPOS

Field	Subfield or refinement	Entry	Explanation and action
			This table specifies the baud rate, data inversion and purpose for each TMS to DCH link. Datafill for all tuples is identical except for the ISGNOs. The ISGNOs correspond to the DCH numbers in table DCHINV.
DATATYPE		TMS	Enter TMS for a dedicated DA terminal.
POSTYPE		BP	Enter BP for a dedicated DA terminal.
PROTOCOL		ASCII	Enter ASCII for a dedicated DA terminal.
SRVSET		DASERV, INTSERV	Enter DASERV, INTSERV, or enter both for a dedicated DA terminal.

Datafill example for table TOPSPOS

Sample datafill for table TOPSPOS appears in the following example.

TOPS DA Subtending TMS (continued)

MAP examples for table TOPSPOS

```
POS   VCCKT     VCPD   CARD    DATAPATH          POSAREA
NO              GRP    CODE
-------------------------------------------------------
100 TMS 0 0  1 NPDGRP DS1SIG TMS MP ASCII 0 0 OPR 2 ALL ALL
```

Sample datafill for table TOPSPOS for dedicated DA terminals appears in the following example.

```
POSNO
     VCCKT          VCPDGRP  CARDCODE
     DATAPATH
                                        POSAREA
_____________________________________________________________
  300
     TMS  0 1 1     NPDGP    DS1SIG
      TMS      BP         ASCII  3  0
                              OPR  3  DASERV $ DA $
  301
     TMS  0 1 4     NPDGP    DS1SIG
      TMS      BP         ASCII  3  1
                              ASST  3  DASERV $
  311
     TMS  0 1 7     NPDGP    DS1SIG
      TMS      BP         ASCII  3  2
                              IC  3  DASERV $
  312
     TMS  0 1 11    NPDGP    DS1SIG
      TMS      BP         ASCII  3  3
                              OPR  3  DASERV $ DA $
```

Datafilling table TOPSDEV

This table is for MPs configured as Force Management. This table changes to include fields to specify the TPC and the HSLI card to which the MP interfaces. The TPC number is the same in the new table TPCINV and table TOPSDEV. Enter data in table TPCINV before you enter the data in MP.

A maximum of four MPs can be present on each TPC.

You cannot make changes to current tuples. To make a change to a tuple in these tables, delete the tuple and add the tuple again.

You enter the PMTYPE as TMS and the controller type is TPC. In this event, voice and data circuit datafill are necessary for this table. This condition applies to datafill for the DTC PMTYPE. Add data only for table TOPSDEV.

If the FMCRT is a TOPS MP position, the FMCRT can subtend TMS.

Datafilling table TDCDEF

Use this table with table TMSPVC to create the routing information for the TMS DCH. Each group of four ISGs has the same TDCTAB data. Only the ISGNOs change. The ISG numbers correspond to the DCH numbers in table DCHINV.

Table TDCDEF changes with new TMS data link assignment rules for TOPS MP CCI DA and TOPS MPX IBM DA. Modify table TDCDEF when you change table TMSPVC.

In BCS32, the removal of a datafill restriction in table TDCDEF accommodates implementation of the LAPD protocol in a working switch with TMS. Before BCS32, you had to take a complete TMS out of service (OOS) to make changes in tables TDCDEF. The error message WARNING: Static data for TMS # was not updated. The BSY and RTS or follow RTS NODATASYNC, COLD SWACT Sequence. appears when the user attempts to change a tuple in table TDCDEF. In BCS32 and later versions, you can make changes on a data link base. Take the primary and secondary data link pair OOS at the same time to change datafill in table TDCDEF.

The procedure to change the PROTOCOL field in table TDCDEF in BCS32 appears as follows:

- OFFLINE primary and secondary data link pair
- DELETE associated entries in table SPECCONN
- CHANGE field PROTOCOL for the links in table TDCDEF
- ADD the data link tuples back in SPECCONN
- Return to Service (RTS) the links

Datafill example for table TDCDEF

Sample datafill for table TDCDEF appears in the following examples.

TOPS DA Subtending TMS (continued)

MAP example for table TDCDEF before change

```
ISGNO    TDCTAB
_____________________________________________________
32       11   DCEL   DA   1
         12   DCEM   DA   1
         13   DCEH   DA   1
         14   DTEL   DA   1  $
```

MAP example for table TDCDEF after change

```
ISGNO   TDCTAB
_____________________________________________________
32      11   X25DCEL   DA   1
        12   X25DCEM   DA   1
        13   X25DCEH   DA   1
        14   X25DTEL   DA   1
        11   LAPDCEL   DA   1
        12   LAPDCEM   DA   1
        13   LAPDCEH   DA   1
        14   LAPDTEL   DA   1
```

Datafilling table SPECCONN

This table defines the special connections of DS1 channels on the TMS to the TMS DCH channels. The system uses the TMS for TPC, DA and ORDB interface. Field ENDPT2 defines the DCH channels. Field ENDPT1 defines the corresponding TMS DS1 channels. Table TPCINV and TMSPSDEV define the ENDPT1 data.

Enter DS1s as ENDPT1 in BCS30 to make sure of connectivity. In BCS31, this datafill restriction does not occur.

Enter table SPECCONN for 96 positions on each TMS. Refer to notes on table TPCINV.

The Operator Position data link and DCH channel assignment rules for TMS appear in the previous figures of this module. The ENDPT1 in table SPECCONN is the TMS channel assigned to the TPC number in table TPCINV. The corresponding ENDPT2 is the DCH and DCH channel number from the preceeding figures.

The first data link assigned to a TPC or VPC in table TPCINV is the PRIMARY. The second data link is the SECONDARY. Follow this standard when you use the figures to enter data in table SPECCONN.

TOPS DA Subtending TMS (end)

Tools for verifying translations

The TOPS DA Subtending TMS does not use tools for verifying translations.

SERVORD

The TOPS DA Subtending TMS does not use SERVORD.

TOPS E911

Ordering codes

Functional group ordering code: OSB00101

Functionality ordering code: not applicable

Release applicability

TOPS15 and up

Prerequisites

To operate, TOPS E911 has the following prerequisites:

- BAS Generic, BAS00003
- Table TOPSFTR parameter TOPS_ON_OFF_SWITCH = Y
- MDC Minimum, MDC00001

Description

This functionality is provided by the following features:

Feature number	Feature name
AF2036	TOPS Transfer to E911 with ANI Forwarding

This feature allows a TOPS operator to forward a 0- dialed emergency call into the E911 system and to forward ANI with the call. This reduces the connection time for 0- emergency calls since the ANI information can be used to automatically determine the proper group of attendants to receive the call and to identify the address of the calling party.

ANI can be forwarded when Feature Group C (FGC) signaling is used on the trunk connecting the TOPS position to the E911 tandem. Without this feature, ANI is outpulsed from the TOPS position only if Feature Group D (FGD) signaling is used.

The TOPS operator retains the capability to remain on the line until the caller is connected to the E911 attendant in case the caller conveys vital information to the operator, but is then unable to continue the conversation with the attendant.

Also, a three-way voice connection is available to allow the operator to converse with the E911 system attendant.

Operation

Background

9-1-1 Emergency calls

When a caller seeks emergency assistance by dialing 9-1-1, the call is routed from the end office to the E911 tandem serving the caller's area. The signaling supported over trunks connecting the end office to the E911 tandem is two-stage:

- Stage 1: KP + 911 + ST
- Stage 2: KP + I + Calling digits + ST

The second stage contains a single digit ANI identifier digit(I) and 7 calling digits in the case of identified ANI, or 0 calling digits in the case of unidentified ANI. The following ANI ID digits may be outpulsed: 0 indicates valid ANI success, 2 indicates ANI fail, and 1 indicates an ONI call.

The call arrives at the E911 tandem with the ANI information. The ANI is then used in database accesses to determine the appropriate group of E911 attendants to process the call and to determine the location (address) of the caller. The E911 attendant receives the call with the calling number and location information displayed.

0- Emergency calls

An emergency call dialed as 0-, rather than as 9-1-1, is processed as follows: The 0- call arrives at the TOPS operator and the incoming ANI may be displayed at the position. The operator then forwards the call to the E911 tandem office. When the TOPS office serves more than one E911 tandem, the correct tandem to route to may be based upon the originating party: Routing may be determined from the incoming trunk group and the calling NXX which both can be used to activate the translation mechanism known as `Class of Service' screening. The TOPS positions may have an `Out Trunks' key datafilled to route to E911 offices, in which case Class of Service screening is invoked and the call is forwarded to the appropriate E911 tandem when the operator activates this function.

If FGC signaling is used on the TOPS outgoing trunk that connects to the tandem, ANI is not sent with the forwarded call. With existing software, ANI is outpulsed from the TOPS office only if FGD signaling is used.

Since the tandem does not receive ANI (with FGC signaling), there can be no automatic lookup to determine which E911 attendant receives the call, and to determine the address of the calling party. Instead, the tandem sends the call to a `default' attendant when no ANI is received, and this attendant must ask the caller for his/her calling number. The attendant may then use this number

TOPS E911 (continued)

to determine the correct group of attendants to route the call. The attendant handling the call must then do a manual lookup, using the calling number, to determine the caller's address.

Thus, more time is required to complete an operator handled emergency call when the ANI is not forwarded from the TOPS position to the E911 tandem. And in many areas, a significant percentage of emergency calls are dialed as 0- calls.

OP trunk connecting TOPS to E911 tandem

Existing software allows an OP trunk group to connect a DMS-100 end office to a TOPS office. This feature allows an OP trunk group on the outgoing side of a TOPS office to connect to an E911 tandem office as illustrated below. Therefore, an outgoing OP trunk may be used where an E911 tandem office does not support FGD signaling. Otherwise, without FGD signaling, ANI could not be outpulsed from a TOPS office.

In emergency calls where ANI is not received at the TOPS office (e.g. ANI fail), the TOPS operator may ask the originating party for the calling digits. If obtained, the operator can then key in the digits and they are forwarded to the E911 tandem office when outpulsing occurs on this OP trunk. (If the calling digits are entered after outpulsing has occurred, they are not forwarded.)

When a TOPS operator forwards an emergency call to the E911 tandem and floats the call, the `Operator Hold' capability may be forwarded to the tandem. Also, `Ring Back' signals may be propagated back through the TOPS office.

Existing Bellcore AMA or NT AMA records are automatically generated for 0- emergency calls supported by this package.

If the calling digits are entered after outpulsing has occured, they are not forwarded.

Following is a trunking diagram.

TOPS connected to E911 tandem

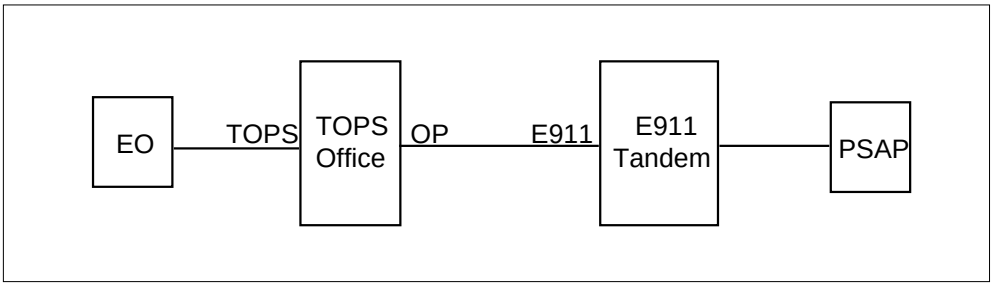

Although not indicated in the diagram, a TOPS office may serve more than one E911 tandem. Class of Service Screening on the originating party may be used to determine routing to the correct tandem.

Note that this feature supports a TOPS position to OP trunk connection only. It does not support a direct TOPS trunk to OP trunk connection (except when connected by an operator) nor an incoming OP trunk to TOPS position connection.

Although this feature is intended to support emergency calls forwarded over these OP trunks, translations may be set up to support non-emergency calls forwarded over these trunks. And, ANI is outpulsed on all call types forwarded over these OP trunks.

The OP trunk group connecting the TOPS office to the E911 tandem uses MF signaling and supports the two-stage system required by the tandem. Signaling is illustrated below:

Signaling on outgoing OP trunk

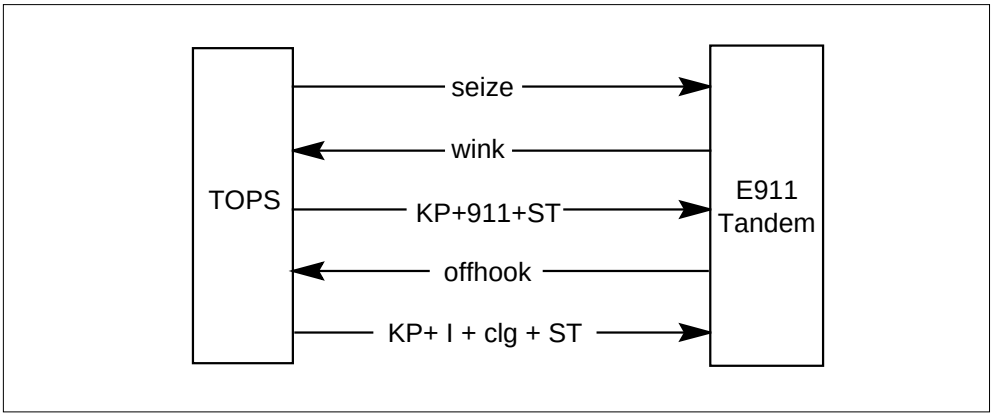

Note that the `Offhook' message signals ANI spill rather than indicating `true answer'. Thus, `true answer' information is unavailable to the TOPS office. When the TOPS office receives the `Offhook' message, the TOPS position screen display may inaccurately indicate that an E911 attendant has answered the call.

Example datafill for an OP trunk group supporting the discussed configuration is specified below:

TOPS E911 (continued)

MAP display example for table TRKSGRP

```
                                                UNSUPPORTED
  FIELD                        ENTRY                ENTRY
_____________________________________________________________
CLLI                           LOGOPBELLI
  SGRP                         0
  CARDCODE                     2X83AA
  SIGDATA                      STD
  DIR                          OG or 2W
* OPULSTYP                     MF                 DP, C6, SS7 ...
  OSTARTSG                     WK
  IDGTIME                      7
  NUMSTOPS                     0
  CCONT                        EI
  RNGBCK                       EI
  ESUPR                        N
  SAT                          N
  REMBSY                       N
  TRKGRDTM                     70
  ECSTAT                       UNEQ
```

MAP display example for table TRKGRP

```
                                                UNSUPPORTED
  FIELD                        ENTRY                ENTRY
_____________________________________________________________
CLLI                         LOGOPBELLI
  GRPTYP                       OP
  TRAFSNO                      0
  PADGRP                       TLD
  NCCLS                        NCRT
  GRPINFO
     TRAFCLS                   SP
     SELSEQ                    MIDL
     STNCLS                    COMB
     TRAFTYPE                  MIX
  *  ANITYPE                   REV                  WK,REV,NO
     HOLDTYPE                  NOHOLD or
                                TERMHOLD
     BILLSPILL                 N
     V2DATA
        DIR                    OG or 2W
     EADATA
     *  EA                     N                    Y
```

There are values specified above for pertinent fields which are not supported with this feature. These restrictions, however, are not enforced by table control software. If table TRKSGRP, field OPULSTYP is datafilled as any value other than `MF', or if table TRKGRP, field ANITYPE is not datafilled as `REV', or field EA is datafilled as `Y' (indicating that double ANI ID digits are signaled), then calls are not be forwarded on the OP trunk, but are routed to reorder treatment. Also, logs are produced for calls when either of these unsupported values is datafilled.

Terminator (E911) operator hold capability

Operator Hold is available with existing software allowing a TOPS operator to maintain control of a call. This capability enables the connection to the calling party to be maintained even if the calling party goes onhook. Operator Hold is in effect when the call is connected to an operator system.

For operator assisted emergency calls Operator Hold is in effect when the TOPS operator remains connected to the call. This feature provides the optional capability of supporting Terminator Operator Hold for forwarded emergency calls in which the TOPS operator has floated the call. The Operator Hold capability is forwarded to the 3911 tandem. Thus, for an emergency call in a floated state with Terminator Operator Hold in effect, the signal is forwarded to the E911 tandem when an 'On Hook' signal is received from the originator and the connection is not taken down. Only the E911 attendant can take down the call.

Terminator Operator Hold Optionality

Terminator Operator Hold for operator handled emergency calls is an optional capability controlled by datafill. It becomes in effect when field HOLDTYPE of table TRKGRP (OP) has the value TERMHOLD.

Coin Control and Ring Back

The Terminator Operator Hold capability for calls in a floated state allows coin signals and `Ring Back' to be propagated through the TOPS office. The Ring Back signal consists of a wink followed by MF tone if inband/expanded inband signaling is used. (Multiwink, or out of band, signaling consists only of winks.) If a call is floated by the TOPS operator with Operator Hold in effect at the E911 tandem, a Ring Back signal sent by the attendant is propagated back through the TOPS office. Winks are mapped through the TOPS office. If inband/expanded inband signaling is used, the end office attaches an MF receiver and cuts off the speech path to the subscriber. Thus, the MF tone is not received at the originating party.

Coin signals and Ring Back are not propagated through a TOPS office when a TOPS operator is connected - either for calls in an active or hold state. Furthermore, if a Ring Back signal is sent by the E911 attendant the TOPS

TOPS E911 (continued)

operator and the calling party may receive tone blasts if inband/expanded inband signaling is used. If the operator is connected, winks are not propagated through the TOPS office, but MF tone passes through. Thus, the operator hears the tone. Since the wink is not propagated, the end office does not know to cut off the speech path to the originating party. Thus, the subscriber also receives tone. The tone blasts are not received if multiwink signaling is used.

Logs

New log report TOPS 119 is produced when attempting to forward calls over OP trunks when unsupported values have been datafilled for this trunk in table TRKSGRP and/or table TRKGRP.

OMs

There is no change to OMs. However, OP trunk OMs are pegged in offices equipped with this feature.

Translations table flow

The TOPS E911 translations tables are described in the following list:

- Table TRKGRP (OP)
- Table TRKSGRP

The TOPS E911 translation process is shown in the flowchart that follows.

Table flow for TOPS E911

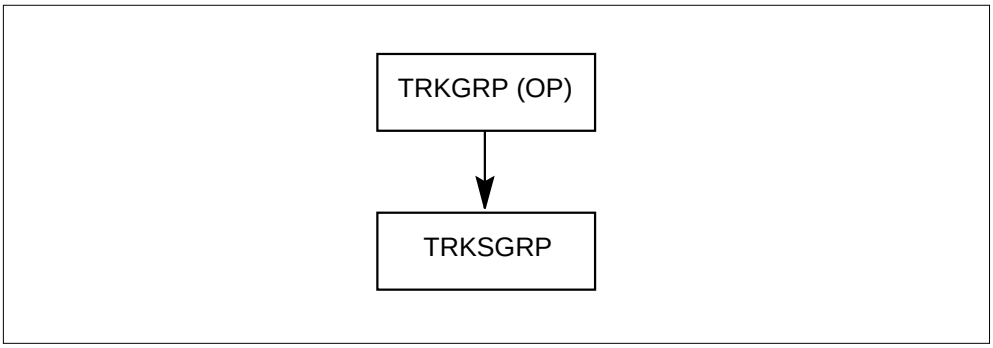

TOPS E911 (continued)

Limitations and restrictions

The following limitations and restrictions apply to TOPS E911:

- This feature package must be equipped in order for TOPS calls to be outpulsed on OP trunks. Without this feature, OP trunks may be datafilled, but calls are not forwarded on them; they are routed to treatment.
- The outgoing OP trunk used with this feature supports only the functions discussed above. The full set of options datafillable in table TRKGRP for OP trunks is not supported.
- Note that this feature supports a TOPS position to OP trunk connection only. It does not support a direct TOPS trunk to OP trunk connection (except when connected by the operator) nor an incoming OP trunk to TOPS position connection.
- For lines in which FX (foreign exchange) numbers are substituted for actual directory numbers (e.g. for hotel or restricted phones) in ANI spill, the FX number must be included in the E911's database.
- In an operator assisted emergency call, Operator Hold is in effect when the TOPS operator remains connected to the call, even when the OP trunk has the Termhold capability in effect. The TOPS operator maintains control of the call, and if he/she presses the Release Forward key, the E911 tandem is disconnected, thus breaking the the connection between the calling party and the tandem office.
- Signaling on this OP trunk requires that an answer message be received to indicate a request to spill ANI. If this message is not received within 13 seconds, the call is routed to treatment.
- If both E911 and TOPS software reside in the same office, loop-around trunks are required.

Interactions

The signaling used on the OP trunk group outgoing from the TOPS office supports the two-stage signaling system required by existing E911 tandem software.

This feature software interworks with existing E911 tandem software

Activation/deactivation by the end user

TOPS E911 requires no activation or deactivation by the end user.

Billing

Existing BellCORE AMA or NT AMA records are generated automatically for 0- emergency calls supported by this feature. Although there are no

TOPS E911 (continued)

changes in AMA, AMA considerations must be made because `true answer' is unavailable at the TOPS office. The calls perhaps should be marked as `No Charge' in routing translations.

Note: Although `true answer' is not available, calls are marked as `answered' in the AMA record.

Station Message Detail Recording

TOPS E911 does not affect Station Message Detail Recording.

Datafilling office parameters

TOPS E911 does not affect office parameters.

Datafill sequence

The following table lists the tables that require datafill to implement TOPS E911. The tables are listed in the order in which they are to be datafilled.

Datafill tables required for TOPS E911

Table	Purpose of table
TRKGRP	Trunk Group Table. Connect TOPS to E911 Tandem
TRKSGRP	Trunk Subgroup Table. Connect TOPS to E911 Tandem

Datafilling table TRKGRP

The following table shows the datafill specific to TOPS E911 for table TRKGRP. Only those fields that apply directly to TOPS E911 are shown. For a description of the other fields, refer to the data schema section of this document.

Datafilling table TRKGRP

Field	Subfield or refinement	Entry	Explanation and action
GRPTYP		OP	This feature does not add or change any fields in table TRKGRP. It does, however, enable the OP trunk group type to be used in the configuration discussed in this document. When used with this feature, it supports only the datafillable options shown in the following datafill example.

Datafill example for table TRKGRP

The following example shows sample datafill for table TRKGRP.

MAP display example for table TRKGRP

```
                                                UNSUPPORTED
  FIELD                        ENTRY              ENTRY
 ____________________________________________________________
CLLI                         LOGOPBELLI
  GRPTYP                       OP
  TRAFSNO                      0
  PADGRP                       TLD
  NCCLS                        NCRT
  GRPINFO
     TRAFCLS                   SP
     SELSEQ                    MIDL
     STNCLS                    COMB
     TRAFTYPE                  MIX
     ANITYPE                   REV                 WK,REV,NO
     HOLDTYPE                  NOHOLD or
                                TERMHOLD
     BILLSPILL                 N
     V2DATA
        DIR                    OG or 2W
     EADATA
        EA                     N                   Y
```

Datafilling table TRKSGRP

The following table shows the datafill specific to TOPS E911 for table TRKSGRP. Only those fields that apply directly to TOPS E911 are shown. For a description of the other fields, refer to the data schema section of this document.

Datafilling table TRKSGRP

Field	Subfield or refinement	Entry	Explanation and action
			This feature does not add or change any fields in table TRKSGRP. It does, however, enable the OP trunk group type to be used in the configuration discussed in this document. When used with this feature it supports only the datafillable options which are shown in the following datafill example.

Datafill example for table TRKSGRP

The following example shows sample datafill for table TRKSGRP.

TOPS E911 (end)

MAP display example for table TRKSGRP

```
                                                UNSUPPORTED
  FIELD                        ENTRY              ENTRY
_____________________________________________________________
CLLI                         LOGOPBELLI
  SGRP                         0
  CARDCODE                     2X83AA
  SIGDATA                      STD
  DIR                          OG or 2W
  OPULSTYP                     MF              DP, C6, SS7 ...
  OSTARTSG                     WK
  IDGTIME                      7
  NUMSTOPS                     0
  CCONT                        EI
  RNGBCK                       EI
  ESUPR                        N
  SAT                          N
  REMBSY                       N
  TRKGRDTM                     70
  ECSTAT                       UNEQ
```

Translation verification tools

TOPS E911 does not use translation verification tools.

SERVORD

TOPS E911 does not use SERVORD.

TOPS Extended BCAMA-EBAF

Ordering codes

Functional group ordering code: OSB00101

Functionality ordering code: not available

Release applicability

BCS35 and up

Prerequisites

To operate, TOPS Extended BCAMA-EBAF requires the following:

- Functionality BAS Generic, BAS00003
- Table TOPSFTR paramter TOPS_ON_OFF_SWITCH = Y

Description

This functionality is provided by the following features:

Feature number	Feature name
AF1726	TOPS Expanded Bellcore AMA Format (EBAF)
UG100983	AMA: SC 625 CC 110 CALLING # HAS NXX0000
BR29160	Changes to Calling Information in AMA
BR22977	Module code 104 for TOPS billing records

This functionality provides the option for operating companies to append modules containing additional call record information to the AMA records. EBAF can be implemented in phases (0, 1, or 2) to provide a smooth transition to the modular concept. Phase 0 AMA records are in the same format as they were prior to BCS28. Phase 0 AMA records are not discussed in this document. Phase 0 and 1 AMA records are described in this document. EBAF can identify the AMA records that have modules appended on a trunk group basis. Table control also provides the capability to append modules to AMA records for the entire office. By appending modules on a trunk group basis, operating company personnel can verify the AMA records for that trunk group prior to changing an entire office to the modular concept.

Operation

AF1726—TOPS Expanded Bellcore AMA Format (EBAF)

EBAF provides additional call record information for AMA billing records. This information is provided by implementing new structure codes and by

TOPS Extended BCAMA-EBAF (continued)

appending modules containing additional call record information to the AMA record. Prior to EBAF, call type codes indicated the billing class of a call. Effective with EBAF, call-type codes indicate the general service received for a call.

EBAF provides operating companies with the capability of generating AMA records with or without modules appended to the records. Operating companies can also have a combination of AMA records with modules and without modules at the same time. Format type can be set for an entire office or on a trunk group basis only.

UG100983—AMA: SC 625 CC 110 CALLING # HAS NXX0000

This CSR changes the setting of the Study Indicator field, Byte 6, in the AMA record for some TOPS and LAMA/CAMA calls. Affected calls have the following characteristic: A calling number is not available, so a default NPA-NXX is taken from table TOPSBC. Refer to BR14625 (Originating NPA in Originating Number Field of AMA) in functionality TOPS Call Processing Features (Billing), OSB00101.

For these TOPS calls, the Study Indicator field, Byte 6, recorded value 0. For LAMA/CAMA calls, the Study Indicator field, Byte 6, recorded value 1, indicating that a calling 7-digit number is not available.

For both TOPS and LAMA/CAMA calls, value 6 is now recorded, indicating that a calling 4-digit line number (calling station number) is not available. These changes are for both TOPS and non-TOPS AMA records.

Verify as follows.

- TOPS—For TOPS ONI 0+ Call with a Default Calling Number (EBAF Phase 2):
  - — Set tuple EBAF_PHASE in table TOPAMAOP to value PHASE2
  - — Set the NPANXXRQ field of the incoming TOPS trunk group to Y
  - — Bring a 0+ ONI call to a position
  - — Have the operator cancel the call
  - — The study indicator field, byte 6 should be populated with value 6.
- LAMA/CAMA—Not Applicable

Example record (TOPS)—ONI 0+ call with a default calling number (EBAF Phase 2)

```
HEX ID#AA  STRUCTURE CODE#40752C  CALL CODE#192C
SENSOR TYPE#036C  SENSOR ID#0123456C  REC OFFICE TYPE#036C
REC OFFICE ID#0123456C  DATE#10101C  TIMING IND#00000C
STUDY IND#0200060C  SERVICE OBSERVED#0C
ORIG NPA#619C  ORIG NUMBER#3200000C  CONNECT TIME#1811443C
ELAPSED TIME#000000098C  OPERATOR IDS#1050520003101C
ACC OPERATOR WORK TIME#00097C  SERVICE FEATURE#000C
STATION SIGNALING IND#2C  SCREENING CODE#000C
CALLED NUMBER INPUT#1C  CALLING NUMBER SOURCE#2C
MODULE CODE#316C  LOCAL INDICATOR#1C
MODULE CODE#311C  ORIG CALL TYPE#002C  MODULE CODE#310C
KEYING ACTIONS#111112110C  MODULE CODE#051C
OVERSEAS IND#0C  TERM NPA#00201C  TERM NUMBER#2201122C
COMPLETION IND#008C  RATE IND#1C
OSS CALL COMPLETION CONDITIONS#1111110C  MODULE CODE#104C
TRUNK FACILITY ID#103000001C  MODULE CODE#000C
```

Example record (non TOPS)—ONI equal access call with a default calling number

```
HEX ID#AA  STRUCTURE CODE#00625C  CALL CODE#110C
SENSOR TYPE#036C  SENSOR ID#0000000C  REC OFFICE TYPE#036C
REC OFFICE ID#0000000C  DATE#10912C  TIMING IND#00000C
STUDY IND#0000060C  ANSWER#0C  SERVICE OBSERVED#0C
OPER ACTION#0C  SERVICE FEATURE#000C  ORIG NPA#613C
ORIG NUMBER#6210000C  OVERSEAS IND#0C  TERM NPA#00519C
TERM NUMBER#8881233C  ANSWER TIME#1627062C
ELAPSED TIME#000000065C  IC/INC PREFIX#02221C
CC DATE#10912C  CC TIME#1626575C  ELAPSED CC#000000152C
IC/INC EVENT STATUS#010C  TRUNK GROUP NUMBER#10299C
ROUTING INDICATOR#0C  DIALING INDICATOR#1C ANI INDICATOR#1C
```

BR29160—Changes to Calling Information in AMA

This PRSDOC changes the population of AMA fields relating to the calling number. When a call is made in TOPS EBAF Phase 2, and no calling number is present, the following fields are null-filled:

- Originating NPA
- Originating Number
- Calling Number Source
- Significant Digits in Next Field (for Originating Open Digits)
- Originating Open Digits 1, and Originating Open Digits 2

TOPS Extended BCAMA-EBAF (continued)

This change affects both Open Numbering Plan and North American AMA. Only structure codes 106 and 752 are affected.

Example AMA record—Delay Call, Open Numbering, without a Calling Number (EBAF Phase 2)

```
HEX ID:AA  STRUCTURE CODE:40106C  CALL CODE:196C
SENSOR TYPE:036C  SENSOR ID:0123456C  REC OFFICE TYPE:036C
REC OFFICE ID:0123456C  DATE:20123C  TIMING IND:00000C
STUDY IND:0200040C  SERVICE OBSERVED:0C
SIG DIGITS NEXT FIELD:FFFF  ORIG OPEN DIGITS 1:FFFFFFFFFFF
ORIG OPEN DIGITS 2:FFFFFFFFF ORIGINATING CHARGE INFO:FFFF
CONNECT TIME:1405426C  ELAPSED TIME:000000012C
SERVICE FEATURE:000C  STATION SIGNALING IND:9C
SCREENING CODE:000C  CALLED NUMBER INPUT:1C
CALLING NUMBER SOURCE:FF  MODULE CODE:311C
ORIG CALL TYPE:006C  MODULE CODE:310C
KEYING ACTIONS:111111110C  MODULE CODE:032C
OPERATOR IDS:1030340003101C  ACC OPERATOR WORK TIME:00010C
MODULE CODE:057C  SERVICE ID:999C  DATABASE QUERIED:999C
MEANS OF INFORMATION INPUT:1C  REQUEST COUNTER:001C
COMPANY ID:FFFFFF  MODULE CODE:000C
```

Example AMA record—Delay Call, North American, without a Calling Number (EBAF Phase 2)

```
HEX ID:AA  STRUCTURE CODE:40752C  CALL CODE:196C
SENSOR TYPE:036C  SENSOR ID:0123456C  REC OFFICE TYPE:036C
REC OFFICE ID:0123456C  DATE:20123C  TIMING IND:00000C
STUDY IND:0200040C  SERVICE OBSERVED:0C
ORIG NPA:FFFF  ORIG NUMBER:FFFFFFFF  CONNECT TIME:1405341C
ELAPSED TIME:000000015C  OPERATOR IDS:1030340003101C
ACC OPERATOR WORK TIME:00010C  SERVICE FEATURE:000C
STATION SIGNALING IND:9C  SCREENING CODE:000C
CALLED NUMBER INPUT:1C  CALLING NUMBER SOURCE:FF
MODULE CODE:311C  ORIG CALL TYPE:006C
MODULE CODE:310C  KEYING ACTIONS:111111110C
MODULE CODE:057C  SERVICE ID:999C  DATABASE QUERIED:999C
MEANS OF INFORMATION INPUT:1C  REQUEST COUNTER:001C
COMPANY ID:FFFFFF  MODULE CODE:000C
```

Verify as follows.

- Delay Call, Open Numbering, without a Calling Number (EBAF Phase 2)
  - — Have tuple EBAF_PHASE in table TOPAMAOP set to value PHASE2
  - — Have Open Numbering enabled
  - — Make a delay call
  - — Have the operator position release
  - — Fields Significant Digits in Next Field, Originating Open Digits 1, Originating Open Digits 2, and Calling Number Source should be null-filled.
- Delay Call, North American, without a Calling Number (EBAF Phase 2)
  - — Have tuple EBAF_PHASE in table TOPAMAOP set to value PHASE2
  - — Have Open Numbering disabled
  - — Make a delay call
  - — Have the operator position release
  - — Fields Originating NPA, Originating Number, and Calling Number Source should be null-filled.

BR22977—Module code 104 for TOPS billing records

Before BCS32, TOPS used module 303 to append the incoming trunk group number to TOPS AMA records. With feature NC0248 the introduction of (Terminating Trunk Group Usage), module 303 became obsolete and equivalent information is provided in module 104. For TOPS, module 104 is only appended to billing records on the originating side.

Module 303 contained the trunk group number of the selected trunk group. Module 104 contains the trunk group number, the trunk member number, and the direction of the trunk.

PRSDOC BK01010 (Added functionality to TOPS module 104) in functionality TOPS Call Processing Features (Billing), OSB00101, allows module 104 to be appended to TOPS billing records produced in pre-EBAF phase 2 TOPS offices.

An example of a billing record with module 303 appended is as follows:

TOPS Extended BCAMA-EBAF (continued)

Example AMA record with module 303 appended

```
HEX ID: AA STRUCTURE CODE:40500C CALL CODE:006C
SENSOR TYPE:036C
SENSOR ID:1000000C REC OFFICE TYPE:036C REC OFFICE
ID:0000000C
DATE:60102C ANSWER:1C SERVICE FEATURE:000C ORIG NPA:613C
ORIG NUMBER:6211901C OVERSEAS IND:1C TERM NPA:00613C
TERM NUMBER:6601235C CONNECT TIME:0943299C
ELAPSED TIME:0000000C
TNN:0000074C MODULE CODE:303C TRUNK GROUP NUMBER:00511C
MODULE CODE:000C
```

An example of a billing record with module 104 appended is as follows:

Example AMA record with module 104 appended

```
HEX ID: AA  STRUCTURE CODE:40500C  CALL CODE:950C
SENSOR TYPE:036C
SENSOR ID:0000000C REC OFFICE TYPE:036C REC OFFICE
ID:0000000C
DATE:01030C  ANSWER:0C  SERVICE FEATURE:000C ORIG NPA:000C
ORIG NUMBER:0000000C  OVERSEAS IND:0C  TERM NPA:00517C
TERM NUMBER:4231235C  CONNECT TIME:1051029C
ELAPSED TIME:000000056C
MODULE CODE:104C TRUNK FACILITY ID:205110000C MODULE
CODE:000C
```

Module 303 is triggered in TOPS billing from table TOPAMAOP by setting the tuple RECORD_ORIGINATING_TRK_GRP_NUM to y(es). The TOPS software is changed to append module 104 instead of 303 for TOPS billing records. This gives TOPS billing records the added capability of recording the trunk member number and the trunk direction (incoming) in addition to the trunk group number.

When a 1 + Direct Dialed, non-operator, non-hotel, non-coin, call is routed over a TOPS trunk then billing records with non-TOPS structure codes are produced. TOPS structure codes are defined as structure codes in the 700—799 range with all other structure codes being non-TOPS structure codes. The RECORD_ORIGINATING_TRK_GRP_NUM tuple in table TOPAMAOP does not append module 104 to these records. The TOPS trunk group CLLI name should be datafilled in table AMATKOPT with the TRKINFO option and then module 104 is appended to billing records with non-TOPS structure codes produced over the selected TOPS trunk group.

The following matrix illustrates which tables are consulted based on the billing record structure code and the incoming trunk type to determine whether module 104 is appended to a billing record.

Tables consulted for Module code 104 for TOPS billing records

Table	Heading	Heading
	TOPS trunk type (TOPS, ATC, RONI, IT, IBN)	Non-TOPS trunk type
TOPS structure code	See note 1	Not possible
Non-TOPS structure code	See note 2	See note 2

Note 1: Check tuple RECORD_ORIGINATING_TRK_GRP_NUM in table TOPAMAOP and if true, append module 104 and stop checking. Otherwise, follow note 2 below.

Note 2: Check table AMATKOPT for the trunk group CLLI with the option TRKINFO and append module 104 if present. Otherwise, do not append module 104.

Note 3: Check table AMATKOPT for the trunk group CLLI with the option TRKINFO and append module 104 if present.

CF21659—Fill zeros in orig NPA and no. fields for no calling number

When a call is made in TOPS EBAF Phase 2, and no calling number is present, the following digit fields are populated with zeros:

- Originating NPA, and Originating Number
- Significant Digits in Next Field (for Originating Open Digits)
- Originating Open Digits 1

This change affects both Open Numbering Plan and North American AMA. It corrects PRSDOC BR291600 (described in this package) which null-fills the fields listed above. Note that no changes are made to fields Calling Number Source (N. American) and Originating Open digits 2 (Open Numbering). They remain null-filled. Only structure codes 106 and 752 are affected.

Following is an example AMA record.

TOPS Extended BCAMA-EBAF (continued)

Delay Call, North American, without a Calling Number (EBAF Phase 2)

```
HEX ID:AA  STRUCTURE CODE:40752C  CALL CODE:196C
SENSOR TYPE:036C  SENSOR ID:0123456C  REC OFFICE TYPE:036C
REC OFFICE ID:0123456C  DATE:20123C  TIMING IND:00000C
STUDY IND:0200040C  SERVICE OBSERVED:0C
ORIG NPA:000C  ORIG NUMBER:0000000C  CONNECT TIME:1405341C
ELAPSED TIME:000000015C  OPERATOR IDS:1030340003101C
ACC OPERATOR WORK TIME:00010C  SERVICE FEATURE:000C
STATION SIGNALING IND:9C  SCREENING CODE:000C
CALLED NUMBER INPUT:1C  CALLING NUMBER SOURCE:FF
MODULE CODE:311C  ORIG CALL TYPE:006C
MODULE CODE:310C  KEYING ACTIONS:111111110C
MODULE CODE:057C  SERVICE ID:999C  DATABASE QUERIED:999C
MEANS OF INFORMATION INPUT:1C  REQUEST COUNTER:001C
COMPANY ID:FFFFFF  MODULE CODE:000C
```

Verify as follows.

- Set tuple EBAF_PHASE in table TOPAMAOP to value PHASE2
- Have Open Numbering disabled (parameter NUMBERING_PLAN in table TOPSPARM)
- Make a delay call
- Have the operator position release
- Fields Originating NPA, and Originating Number should be populated with zeros.

AF1726—TOPS Expanded Bellcore AMA Format (EBAF)

EBAF Implementation

To provide a smooth transition to the EBAF format, EBAF is introduced in three phases. Changes are made in the transition from phase 0 to phase 1 and again from phase 1 to phase 2 to reach the final EBAF format. Phases 1 and 2 implement changes to the structure codes and call codes that are used in generating AMA records. Phase 1 of EBAF introduces modules and phase 2 completes the addition of modules used in TOPS AMA records. For a

complete listing of the structure codes, call codes, and modules that are used in each phase of EBAF, see the following table.

TOPS EBAF Phases

Phase	Structure Code	Call Code	Module Code
0	00700 00701 00702 00704 00705 00708 00709 00711 00712 00713 00715 00717 00718 00719 00721 00723 00724 00725 00727 00728 00729 00730 00731 00732 00733 00734 04700 04701 04702 04704 04705 04708 04709 04711 04712 04713 04715 04717 04718 04719 04721 04723 04724 04725 04727 04728 04729 04730 04731 04732 04733	006 009 010 014 015 016 017 018 019 022 023 024 027 028 035 043 044 054 055 057 058 074 107 108 250 251	None
1	00001 00002 00101 00625 00627 00700 00702 00730 00731 00733	006 009 010 014 015 016 017 018 019 022 023 024 027 028 035 043 044 054 055 057 058 074 107 108 110 134 250 251	000 022 050 052 053 054 055 059 060 061 062
2	00001 00002 00101 00625 00627 00751 00752	006 110 134 189 190 191 192 193 194 195 196 197 198 199	000 022 050 051 052 053 054 055 056 057 058 059 060 061 062 066 307

Data tables

EBAF introduces tables TOPAMAOP, EBAFTKPH, and AMASRVID that are used to control the format of the AMA records. Also, tables SERVICES, TRKGRP (RONI), and BCCODES are modified to provide other information needed to generate AMA records with modules appended to them.

- Table TOPAMAOP—This table contains AMA option EBAF_PHASE that sets the EBAF phase for the entire office. Default value for this AMA option is PHASE0. This table also contains two other AMA options that

TOPS Extended BCAMA-EBAF (continued)

control the addition of Module 059, Exchange Access Service Processing Time, and Module 307, Line Number, to AMA records.

- Table EBAFTKPH—This table controls the EBAF phase used to generate AMA records on a trunk group basis. This table controls the EBAF phase for calls routed to operators for the following trunk types:

  — TOPS

  — Intertoll (IT)

  — Access Tandem to Carrier (ATC)

  — Remote Operator Number Identification (RONI)

  Before a billing record is generated, the data in table TOPAMAOP, AMA option EBAF_PHASE is compared with the data in table EBAFTKPH. If the originating trunk is not datafilled in table EBAFTKPH, the AMA record is generated using the EBAF phase for the entire office as specified in table TOPAMAOP. If the trunk type is datafilled in table EBAFTKPH, the EBAF phase in table EBAFTKPH is compared with the EBAF phase for the entire office as specified in table TOPAMAOP, AMA option EBAF_PHASE. If these values differ, the higher EBAF phase value is used.

- Table TRKGRP—This table is expanded to include the Non-BOC Exchange Carrier (NBEC) identification and the Serving Numbering Plan Area (SNPA) associated with calls originating on a Remote Operator Number Identification (RONI) trunk. For further information, see the data assignment section.

- Table SERVICES—This table is expanded to associate a 4-digit ID with the vendor providing a listing service. This ID is recorded in the AMA records as required. For a complete description of this table, see the data schema.

- Table BCCODES—Phase 2 of EBAF introduces new call codes not previously used in the AMA structure. Table BCCODES, field CODES is expanded to include these new call codes. Phase 1 of EBAF introduces the use of call codes 110 and 134. These call codes were already a part of the overall AMA structure but are not used in TOPS AMA records until phase 1 of EBAF.

- Table AMASRVID—This table provides a method for recording a value for the service a call receives (DA service, Toll and Assistance service, or Intercept service). This information is in the Service Identification field of the General Assistance module (057) and the Listing Services module (055).

- Office Parameters—The office parameters that are included in this document are changed to reflect the additional words of memory that are

required for recording units. The changes to table OFCENG office parameters are as follows:

— NUM_OF_BC_AMA_UNITS—Increased by 17 words for a total of 106 words of memory that are required for each charge unit.

— TOPS_NUM_CAMA_RU—Increased by 18 words for a total of 89 words of memory that are required for each recording unit.

— TOPS_NUM_RU—Increased by 22 words for a total of 132 words of memory that are required for each TOPS recording unit.

— OOC_NUM_RU—Increased by 22 words for a total of 175 words of memory that are required for each OOC recording unit.

Also, in table OFCENG, parameter TOPS_EXPANDED_OPRNUM affects AMA record table 296 (bytes 10—13) where the last operator to handle the call is recorded. If this parameter is set to N, the recorded NIL operator number is 3101. If the parameter is set to Y, the recorded NIL operator number is 9999.

EBAF Phases

For ease of transition, EBAF is introduced in three phases (0, 1, and 2). With the added flexibility of generating AMA records with modules on a trunk group basis, operating company personnel can verify AMA records before total cutover to EBAF. The ability of setting the EBAF phase on a trunk group basis also provides the flexibility of generating AMA records that represent all three phases of EBAF (all three phases of EBAF running simultaneously in the same office).

- Phase 0—Phase 0 uses the structure codes and call codes as they existed prior to EBAF. Modules are not used in phase 0. Call codes represent the billing class of a call as used in this phase.
- Phase 1—Phase 1 introduces the modular concept for recording additional call information in the AMA records. Phase 1 reduces the number of structure codes that are used. The call codes that are used in phase 1 include the call codes used in phase 0 and call codes 110 and 134. With phase 1, 1+ non-operator handled CAMA calls produce structure codes 00001, 00002, 00101, 00625, or 00627 instead of the 007XX structure codes used in phase 0. These structure codes (00001, 00002, 00101, 00625, and 00627) do not have modules appended to them. As in phase 0, the call codes that are used in phase 1 also reflect the billing class of a call. Structure codes 00700, 00702, 00730, 00731, and 00733, as used in phase 1 of EBAF, can have modules appended to the AMA record depending upon the service provided to the subscriber.
- Phase 2—Phase 2 completes the transition to the modular concept with the exception of 1+ non-operator handled CAMA calls. The 1+ non-operator

TOPS Extended BCAMA-EBAF (continued)

handled CAMA calls use the same structure codes as in phase 1 without modules appended to them. Phase 2 supports two new structure codes, 00751 and 00752. Structure code 00751 is used for all calls originating on an Intertoll or (ATC) trunk group. Structure code 00752 is used for all calls originating on a RONI or TOPS trunk group. Structure codes 00700, 00702, 00730, 00731, and 00733 are not used in phase 2 of EBAF. The call codes used in phase 2, unlike the call codes used in phases 0 and 1, reflect the service received for a call.

AMA Record Size

The addition of modules with phases 1 and 2 of EBAF increases the size of AMA records. The increase in size of the AMA records directly impacts the number of records that can be stored on a recording device (disk or tape). To prevent the loss of AMA records, the increase in size should be taken into consideration when rotating AMA recording devices.

A standard percentage increase in size of the AMA records cannot be derived, because the increase is dependent on the call mix in an office and on the phase of EBAF that is used for the call. This section contains example call types, example AMA records for each phase of EBAF for those call types, and the percentage change in the size of the AMA records for the given example.

Example 1

The call illustrated by this example consists of the following attributes:

- 0- call originating on a TOPS trunk group
- Calling party requests call completion service from the operating company
- Class charged as station paid
- Successfully completed.

The sizes of the AMA record for the call type shown Example 1 are as follows:

- Phase 0—69 bytes
- Phase 1—69 bytes
- Phase 2—84 bytes

The changes in the AMA record size for the call type shown in Example 1 are as follows:

- Phase 0 to phase 1: 0.0%
- Phase 0 to phase 2: +21.7%
- Phase 1 to phase 2: +21.7%

Example Call Type 1 AMA Record—Phase 0

```
HEX ID:AA  STRUCTURE CODE:00700C  CALL CODE:010C
SENSOR TYPE:036C  SENSOR ID:0000000C REC OFFICE TYPE:036C
REC OFFICE ID:0000000C  DATE:90220C  TIMING IND:00000C
STUDY IND:0200000C  ANSWER:0C  SERVICE OBSERVED:0C
OPER ACTION:1C  SERVICE FEATURE:000C  ORIG NPA:613C
ORIG NUMBER:2391111C  OVERSEAS IND:0C  TERM NPA:00212C
TERM NUMBER:2201111C  CONNECT TIME:2213581C
ELAPSED TIME:000000126C  OPERATOR NUMBER:1010111C
OPERATOR WORK TIME:000000250C
```

Example Call Type 1 AMA Record—Phase 1

```
HEX ID:AA  STRUCTURE CODE:00700C  CALL CODE:010C
SENSOR TYPE:036C  SENSOR ID:0000000C  REC OFFICE TYPE:036C
REC OFFICE ID:0000000C  DATE:90220C  TIMING IND:00000C
STUDY IND:0200000C  ANSWER:0C  SERVICE OBSERVED:0C
OPER ACTION:1C  SERVICE FEATURE:000C  ORIG NPA:613C
ORIG NUMBER:2391111C  OVERSEAS IND:0C  TERM NPA:00212C
TERM NUMBER:2201111C  CONNECT TIME:2214434C
 ELAPSED TIME:000000094C  OPERATOR NUMBER:1010111C
 OPERATOR WORK TIME:000000160C
```

Example Call Type 1 AMA Record—Phase 2

```
HEX ID:AA  STRUCTURE CODE:40752C  CALL CODE:192C
SENSOR TYPE:036C  SENSOR ID:0000000C  REC OFFICE TYPE:036C
REC OFFICE ID:0000000C  DATE:90220C  TIMING IND:00000C
STUDY IND:0200000C  SERVICE OBSERVED:0C  ORIG NPA:613C
ORIG NUMBER:2391111C  CONNECT TIME:2215228C
 ELAPSED TIME:000000266C  OPERATOR IDS:1010111003101C
ACC OPERATOR WORK TIME:00150C  SERVICE FEATURE:000C
STATION SIGNALING IND:2C  SCREENING CODE:000C
CALLED NUMBER INPUT:2C  CALLING NUMBER SOURCE:1C
MODULE CODE:051C  OVERSEAS IND:0C  TERM NPA:00212C
TERM NUMBER:2201111C  COMPLETION IND:001C  RATE IND:1C
OSS CALL COMPLETION CONDITIONS:1111110C  MODULE CODE:000C
```

Example 2

The call illustrated by this example consists of the following attributes:

- 0+ call originating on a TOPS trunk group that uses Mechanized Calling Card Service (MCCS)
- Calling card number provided by calling party

TOPS Extended BCAMA-EBAF (continued)

- Number verified by Line Information Data Base (LIDB)
- Call completed.

The sizes of the AMA record for the call type shown in Example 2 are as follows:

- Phase 0—82 bytes
- Phase 1—100 bytes
- Phase 2—113 bytes

The changes in the AMA record size for the call type shown in Example 2 are as follows:

- Phase 0 to phase 1: +21.5%
- Phase 0 to phase 2: +37.8%
- Phase 1 to phase 2: +13.0%

Example Call Type 2 AMA Record—Phase 0

```
HEX ID:AA  STRUCTURE CODE:00718C  CALL CODE:015C
SENSOR TYPE:036C  SENSOR ID:0000000C  REC OFFICE TYPE:036C
REC OFFICE ID:0000000C  DATE:90220C  TIMING IND:00000C
STUDY IND:0200000C  ANSWER:0C  SERVICE OBSERVED:0C
OPER ACTION:0C  SERVICE FEATURE:000C  ORIG NPA:613C
ORIG NUMBER:2391111C  OVERSEAS IND:0C  TERM NPA:00212C
TERM NUMBER:2201111C  CONNECT TIME:2217155C
ELAPSED TIME:000000152C  OPERATOR NUMBER:0003101C
BILLING NUMBER:02122201234C DIALING RATE:1C RAO NUMBER:745C
BILLING NUMBER CONTENT:5C  BILLING VALID FILE:1C
CREDIT CARD FAIL:000C  OPERATOR WORK TIME:000000000C
```

Example Call Type 2 AMA Record—Phase 1

```
HEX ID:AA  STRUCTURE CODE:40700C  CALL CODE:015C
SENSOR TYPE:036C  SENSOR ID:0000000C  REC OFFICE TYPE:036C
REC OFFICE ID:0000000C  DATE:90220C  TIMING IND:00000C
STUDY IND:0200000C  ANSWER:0C  SERVICE OBSERVED:0C
OPER ACTION:0C  SERVICE FEATURE:000C  ORIG NPA:613C
ORIG NUMBER:2391111C  OVERSEAS IND:0C  TERM NPA:00212C
TERM NUMBER2201111C  CONNECT TIME:2218009C
ELAPSED TIME:000000104C  OPERATOR NUMBER:0003101C
OPERATOR WORK TIME:000000000C  MODULE CODE:052C
BILLING TYPE ID:1C  FORMAT ID:2C SIG DIGITS NEXT FIELD:010C
BILLABLE DIGITS 1:02122201234C BILLABLE DIGITS 2:FFFFFFFFFF
RAO NUMBER:745C  CALLING CARD SUBACCOUNT NUMBER:001C
BILLING NUMBER TREATMENT:FF LIDB RESPONSE:405C OSS ACTION:1C
MEANS OF INPUT/RESPONSE:113C  SEQUENCE CALL COUNTER:001C
MODULE CODE:000C
```

Example Call Type 2 AMA Record—Phase 2

```
HEX ID:AA  STRUCTURE CODE:40752C  CALL CODE:192C
SENSOR TYPE:036C  SENSOR ID:0000000C  REC OFFICE TYPE:036C
REC OFFICE ID:0000000C  DATE:90220C  TIMING IND:00000C
STUDY IND:0200000C  SERVICE OBSERVED:0C  ORIG NPA:613C
ORIG NUMBER:2391111C  CONNECT TIME:2218457C
ELAPSED TIME:000000064C  OPERATOR IDS:0003101003101C
ACC OPERATOR WORK TIME:00000C  SERVICE FEATURE:000C
STATION SIGNALING IND:2C  SCREENING CODE:000C
CALLED NUMBER INPUT:1C  CALLING NUMBER SOURCE:1C
MODULE CODE:051C  OVERSEAS IND:0C  TERM NPA:00212C
TERM NUMBER:2201111C  COMPLETION IND:001C  RATE IND:1C
OSS CALL COMPLETION CONDITIONS:1111110C  MODULE CODE:052C
BILLING TYPE ID:1C  FORMAT ID:2C SIG DIGITS NEXT FIELD:010C
BILLABLE DIGITS 1:02122201234C BILLABLE DIGITS 2:FFFFFFFFFF
RAO NUMBER:745C  CALLING CARD SUBACCOUNT NUMBER:001C
BILLING NUMBER TREATMENT:FF LIDB RESPONSE:405C OSS ACTION:1C
MEANS OF INPUT/RESPONSE:113C  SEQUENCE CALL COUNTER:001C
MODULE CODE:000C
```

Example 3

The call illustrated by this example consists of the following attributes:

- 1+ call originating on a TOPS trunk group that uses Automatic Coin Toll Service (ACTS)
- Rated using TOPS rating system

TOPS Extended BCAMA-EBAF (continued)

- Amount collected verified by ACTS
- Call completed.

The sizes of the AMA record for the call type show in Example 3 are as follows:

- Phase 0—75 bytes
- Phase 1—81 bytes
- Phase 2—94 bytes

The changes in the AMA record size for the call type shown in Example 3 are as follows:

- Phase 0 to phase 1: +8.0%
- Phase 0 to phase 2: +25.3%
- Phase 1 to phase 2: +16.0%

Example Call Type 3 AMA Record—Phase 0

```
HEX ID:AA  STRUCTURE CODE:00705C  CALL CODE:010C
SENSOR TYPE:036C  SENSOR ID:0000000C  REC OFFICE TYPE:036C
REC OFFICE ID:0000000C  DATE:90220C  TIMING IND:00000C
STUDY IND:0200000C  ANSWER:0C
SERVICE OBSERVED:0C  OPER ACTION:0C  SERVICE FEATURE:001C
ORIG NPA:613C  ORIG NUMBER:6210003C  OVERSEAS IND:0C
TERM NPA:00212C  TERM NUMBER:2201111C CONNECT TIME:2224298C
ELAPSED TIME:000000146C  OPERATOR NUMBER:0003101C
CHARGE INDICATOR:2C  AMOUNT OF CHARGE:00055C SSAS CODE:018C
OPERATOR WORK TIME:000000000C
```

Example Call Type 3 AMA Record—Phase 1

```
HEX ID:AA  STRUCTURE CODE:40700C  CALL CODE:010C
SENSOR TYPE:036C  SENSOR ID:0000000C  REC OFFICE TYPE:036C
REC OFFICE ID:0000000C  DATE:90220C  TIMING IND:00000C
STUDY IND:0200000C  ANSWER:0C  SERVICE OBSERVED:0C
OPER ACTION:0C  SERVICE FEATURE:001C  ORIG NPA:613C
ORIG NUMBER:6210003C  OVERSEAS IND:0C  TERM NPA:00212C
TERM NUMBER:2201111C  CONNECT TIME:2225455C
ELAPSED TIME:000000077C  OPERATOR NUMBER:0003101C
OPERATOR WORK TIME:000000000C  MODULE CODE:060C
CHARGE INDICATOR:2C  AMOUNT OF CHARGE:00055C
WALK OR DEPOSIT AMT:00055C  COIN CREDIT IND:0C
MODULE CODE:000C
```

Example Call Type 3 AMA Record—Phase 2

```
HEX ID:AA  STRUCTURE CODE:40752C  CALL CODE:192C
SENSOR TYPE:036C  SENSOR ID:0000000C  REC OFFICE TYPE:036C
REC OFFICE ID:0000000C  DATE:90220C  TIMING IND:00000C
STUDY IND:0200000C  SERVICE OBSERVED:0C  ORIG NPA:613C
ORIG NUMBER:6210003C  CONNECT TIME:2226537C
ELAPSED TIME:000000084C  OPERATOR IDS:0003101003101C
ACC OPERATOR WORK TIME:00000C  SERVICE FEATURE:001C
STATION SIGNALING IND:2C  SCREENING CODE:000C
CALLED NUMBER INPUT:1C  CALLING NUMBER SOURCE:1C
MODULE CODE:051C  OVERSEAS IND:0C  TERM NPA:00212C
TERM NUMBER:2201111C  COMPLETION IND:001C  RATE IND:1C
OSS CALL COMPLETION CONDITIONS:1111110C  MODULE CODE:060C
CHARGE INDICATOR2C  AMOUNT OF CHARGE:00055C
WALK OR DEPOSIT AMT:00055C  COIN CREDIT IND:0C
MODULE CODE:000C
```

Example 4

The call illustrated by this example consists of the following attributes:

- 0+ call originating on a TOPS trunk group
- Person to person
- Call is billed as person paid
- Call completed.

The sizes of the AMA record for the call type shown in Example 4 are as follows:

- Phase 0—69 bytes
- Phase 1—76 bytes
- Phase 2—89 bytes

The changes in the AMA record size for the call type shown in Example 4 are as follows:

- Phase 0 to phase 1: +10.1%
- Phase 0 to phase 2: +28.9%
- Phase 1 to phase 2: +17.1%

TOPS Extended BCAMA-EBAF (continued)

Example Call Type 4 AMA Record—Phase 0

```
HEX ID:AA  STRUCTURE CODE:00700C  CALL CODE:016C
SENSOR TYPE:036C  SENSOR ID:0000000C  REC OFFICE TYPE:036C
REC OFFICE ID:0000000C  DATE:90220C  TIMING IND:00000C
STUDY IND:0200000C  ANSWER:0C  SERVICE OBSERVED:0C
OPER ACTION:0C  SERVICE FEATURE:000C  ORIG NPA:613C
ORIG NUMBER:2391111C  OVERSEAS IND:0C  TERM NPA:00212C
TERM NUMBER:2201111C  CONNECT TIME:2238029C
ELAPSED TIME:000000052C  OPERATOR NUMBER:1020312C
OPERATOR WORK TIME:000000250C
```

Example Call Type 4 AMA Record—Phase 1

```
HEX ID:AA  STRUCTURE CODE:40700C  CALL CODE:016C
SENSOR TYPE:036C  SENSOR ID:0000000C  REC OFFICE TYPE:036C
REC OFFICE ID:0000000C  DATE:90220C  TIMING IND:00000C
STUDY IND:0200000C  ANSWER:0C  SERVICE OBSERVED:0C
OPER ACTION:0C  SERVICE FEATURE:000C  ORIG NPA:613C
ORIG NUMBER:2391111C  OVERSEAS IND:0C  TERM NPA:00212C
TERM NUMBER:2201111C  CONNECT TIME:2238349C
ELAPSED TIME:000000043C  OPERATOR NUMBER:1020312C
OPERATOR WORK TIME:000000080C  MODULE CODE:050C
CHARGEABLE OPER HOLDING TIME:FFFFFF  MODULE CODE:000C
```

Example Call Type 4 AMA Record—Phase 2

```
HEX ID:AA  STRUCTURE CODE:40752C  CALL CODE:192C
SENSOR TYPE:036C  SENSOR ID:0000000C  REC OFFICE TYPE:036C
REC OFFICE ID:0000000C  DATE:90220C  TIMING IND:00000C
STUDY IND:0200000C  SERVICE OBSERVED:0C  ORIG NPA:613C
ORIG NUMBER:2391111C  CONNECT TIME:2239074C
ELAPSED TIME:000000035C  OPERATOR IDS:1020312003101C
ACC OPERATOR WORK TIME:00080C  SERVICE FEATURE:000C
STATION SIGNALING IND2C  SCREENING CODE:000C
CALLED NUMBER INPUT:1C  CALLING NUMBER SOURCE:1C
MODULE CODE:050C  CHARGEABLE OPER HOLDING TIME:FFFFFF
MODULE CODE:051C  OVERSEAS IND:0C  TERM NPA:00212C
TERM NUMBER:2201111C  COMPLETION IND:001C  RATE IND:1C
OSS CALL COMPLETION CONDITIONS:111110C  MODULE CODE:000C
```

Example 5

The call illustrated by this example consists of the following attributes:

- 0+ call originating on a TOPS trunk group
- Call routed to Operator Position

- Calling party requests bill to third number and call completion service
- Third number verified using Billing Validation Authority (BVA)
- Call completed.

The sizes of the AMA record for the call type shown in Example 5 are as follows:

- Phase 0—82 bytes
- Phase 1—90 bytes
- Phase 2—103 bytes

The changes in the AMA record size for the call type shown in Example 5 are as follows:

- Phase 0 to phase 1: +9.7%
- Phase 0 to phase 2: +25.6%
- Phase 1 to phase 2: +14.4%

Example Call Type 5 AMA Record—Phase 0

```
HEX ID:AA  STRUCTURE CODE:00718C  CALL CODE:015C
SENSOR TYPE:036C  SENSOR ID:0000000C  REC OFFICE TYPE:036C
REC OFFICE ID:0000000C  DATE:90220C  TIMING IND:00000C
STUDY IND:0200000C  ANSWER:0C  SERVICE OBSERVED:0C
OPER ACTION:0C  SERVICE FEATURE:000C  ORIG NPA:613C
ORIG NUMBER:2391111C  OVERSEAS IND:0C  TERM NPA:00212C
TERM NUMBER2201111C  CONNECT TIME:2323090C
ELAPSED TIME:000000038C  OPERATOR NUMBER:1020312C
BILLING NUMBER:02122201234C DIALING RATE:4C RAO NUMBER:745C
BILLING NUMBER CONTENT:1C  BILLING VALID FILE:1C
CREDIT CARD FAIL:000C  OPERATOR WORK TIME:000000350C
```

TOPS Extended BCAMA-EBAF (continued)

Example Call Type 5 AMA Record—Phase 1

```
HEX ID:AA  STRUCTURE CODE:40700C  CALL CODE:015C
SENSOR TYPE:036C  SENSOR ID:0000000C  REC OFFICE TYPE:036C
REC OFFICE ID:0000000C  DATE:90220C  TIMING IND:00000C
STUDY IND:0200000C  ANSWER:0C  SERVICE OBSERVED:0C
OPER ACTION:0C  SERVICE FEATURE:000C  ORIG NPA:613C
ORIG NUMBER:2391111C  OVERSEAS IND:0C  TERM NPA:00212C
TERM NUMBER:2201111C  CONNECT TIME:2323474C
ELAPSED TIME:000000037C  OPERATOR NUMBER:1020312C
OPERATOR WORK TIME:000000130C  MODULE CODE:061C
BILLING TYPE ID:3C  RAO NUMBER:745C
BILLING NUMBER:02122201234C  BILLING VALID FILE:1C
CREDIT CARD FAIL:000C  OSS ACTION:3C
MEANS OF INPUT/RESPONSE:222C  SEQUENCE CALL COUNTER:FFFF
MODULE CODE:000C
```

Example Call Type 5 AMA Record—Phase 2

```
HEX ID:AA  STRUCTURE CODE:40752C  CALL CODE:192C
SENSOR TYPE:036C  SENSOR ID:0000000C  REC OFFICE TYPE:036C
REC OFFICE ID:0000000C  DATE:90220C  TIMING IND:00000C
STUDY IND:0200000C  SERVICE OBSERVED:0C  ORIG NPA:613C
ORIG NUMBER:2391111C  CONNECT TIME:2324191C
ELAPSED TIME 000000025C  OPERATOR IDS:1020312003101C
ACC OPERATOR WORK TIME:00130C  SERVICE FEATURE:000C
STATION SIGNALING IND:2C  SCREENING CODE:000C
CALLED NUMBER INPUT:1C  CALLING NUMBER SOURCE:1C
MODULE CODE:051C  OVERSEAS IND:0C  TERM NPA:00212C
TERM NUMBER:2201111C  COMPLETION IND:001C  RATE IND:1C
OSS CALL COMPLETION CONDITIONS:1111110C  MODULE CODE:061C
BILLING TYPE ID:3C  RAO NUMBER:745C
BILLING NUMBER:02122201234C  BILLING VALID FILE:1C
CREDIT CARD FAIL:000C  OSS ACTION:3C
MEANS OF INPUT/RESPONSE:222C  SEQUENCE CALL COUNTER:FFFF
MODULE CODE:000C
```

Example 6

The call illustrated by this example consists of the following attributes:

- 1+ (411) call originating on a TOPS trunk group that receives DA service.
- DA information obtained from Listing Services Data Base (LSDB)
- Billed as station paid.

The sizes of the AMA record for the call type shown in Example 6 are as follows:

- Phase 0—69 bytes
- Phase 1—89 bytes
- Phase 2—107 bytes

The changes in the AMA record size for the call type shown in Example 6 are as follows:

- Phase 0 to phase 1: +28.9%
- Phase 0 to phase 2: +55.0%
- Phase 1 to phase 2: +20.2%

Example Call Type 6 AMA Record—Phase 0

```
HEX ID:AA  STRUCTURE CODE:10700C  CALL CODE:035C
SENSOR TYPE:036C  SENSOR ID:0619351C  REC OFFICE TYPE:036C
REC OFFICE ID:0619351C  DATE:60109C  TIMING IND:00000C
STUDY IND:0200002C  ANSWER:2C  SERVICE OBSERVED:0C
OPER ACTION:0C  SERVICE FEATURE:900C  ORIG NPA:619C
ORIG NUMBER:3225514C  OVERSEAS IND:1C  TERM NPA:00619C
TERM NUMBER:9937055C  CONNECT TIME:1810106C
ELAPSED TIME:000000000C  OPERATOR NUMBER:1020200C
OPERATOR WORK TIME:000000150C  TNN:0000123C
```

Example Call Type 6 AMA Record—Phase 1

```
HEX IDAA  STRUCTURE CODE:50700C  CALL CODE:035C
SENSOR TYPE:036C  SENSOR ID:0619351C  REC OFFICE TYPE:036C
REC OFFICE ID:0619351C  DATE:60109C  TIMING IND:00000C
STUDY IND:0200002C  ANSWER:2C  SERVICE OBSERVED:0C
OPER ACTION:0C  SERVICE FEATURE:000C  ORIG NPA:619C
ORIG NUMBER:3225525C  OVERSEAS IND:1C  TERM NPA:00619C
TERM NUMBER:2339803C  CONNECT TIME:1811081C
ELAPSED TIME:000000149C  OPERATOR NUMBER:1020200C
OPERATOR WORK TIME:000000120C TNN:0002171C MODULE CODE:055C
SERVICE ID001C  MEANS OF INFORMATION INPUT:1C
MEANS OF LSDB ACCESS:1C LSDBS BOC ID:12138C LSDB ACCESSES:FF
LISTING RESPONSE 2C  LISTING STATUS:111111200C
REQUEST COUNTER:001C  MODULE CODE:000C
```

TOPS Extended BCAMA-EBAF (continued)

Example Call Type 6 AMA Record—Phase 2

```
HEX ID:AA  STRUCTURE CODE:50752C  CALL CODE:194C
SENSOR TYPE:036C  SENSOR ID:0619351C  REC OFFICE TYPE:036C
REC OFFICE ID:0619351C  DATE:60109C  TIMING IND:00000C
STUDY IND:0200002C  SERVICE OBSERVED:0C  ORIG NPA:619C
ORIG NUMBER:3225525C  CONNECT TIME:1811526C
ELAPSED TIME:000000136C  OPERATOR IDS:1020200003101C
ACC OPERATOR WORK TIME:00110C  SERVICE FEATURE:000C
STATION SIGNALING IND:2C  SCREENING CODE:000C
CALLED NUMBER INPUT:1C CALLING NUMBER SOURCE:1C TNN:0004219C
MODULE CODE:055C  SERVICE ID:001C
MEANS OF INFORMATION INPUT:1C  MEANS OF LSDB ACCESS:1C
LSDBS BOC ID:12138C  LSDB ACCESSES:FF  LISTING RESPONSE:2C
LISTING STATUS:111111200C  REQUEST COUNTER:001C
MODULE CODE:307C  LINE NUMBER TYPE:001C  NPA:00619C
LINE NUMBER:8405699C  MODULE CODE:000C
```

Example 7

The call illustrated by this example consists of the following attributes:

- 0- call originating on a TOPS trunk group
- Call receives credit for the previous call that encountered some type of trouble (wrong number, poor transmission, etc.)

The sizes of the AMA record for the call type shown in Example 7 are as follows:

- Phase 0—62 bytes
- Phase 1—62 bytes
- Phase 2—96 bytes

The changes in the AMA record size for the call type shown in Example 7 are as follows:

- Phase 0 to phase 1: 0.0%
- Phase 0 to phase 2: +54.8%
- Phase 1 to phase 2: +54.8%

TOPS Extended BCAMA-EBAF (continued)

Example Call Type 7 AMA Record—Phase 0

```
HEX ID:AA  STRUCTURE CODE:00731C  CALL CODE:107C
SENSOR TYPE:036C  SENSOR ID:0000000C  REC OFFICE TYPE:036C
REC OFFICE ID:0000000C  SERVICE DIFFICULTY DATE:90220C
SERVICE DIFFICULTY TIME:2243546C  SERVICE OBSERVED:0C
ORIG NPA:613C  ORIG NUMBER:2391111C  OVERSEAS IND:0C
TERM NPA:00212C TERM NUMBER:2201111C OPERATOR NUBER:1020312C
SERVICE DIFFICULTY:6C  NUMBER OF OCCURRENCES:001C
CHARGE ADJ INDICATOR:0C  AMOUNT OF CREDIT:00000C
MINUTES OF CREDIT:001C  OPERATOR WORK TIME:000000000C
```

Example Call Type 7 AMA Record—Phase 1

```
HEX ID:AA  STRUCTURE CODE:00731C  CALL CODE:107C
SENSOR TYPE:036C  SENSOR ID:0000000C  REC OFFICE TYPE:036C
REC OFFICE ID:0000000C  SERVICE DIFFICULTY DATE:90220C
SERVICE DIFFICULTY TIME:2244370C  SERVICE OBSERVED:0C
ORIG NPA:613C  ORIG NUMBER:2391111C  OVERSEAS IND:0C
TERM NPA:00212C TERM NUMBER:2201111C OPERATOR NUBER:1020312C
SERVICE DIFFICULTY:6C  NUMBER OF OCCURRENCES:001C
CHARGE ADJ INDICATOR:0C  AMOUNT OF CREDIT:00000C
MINUTES OF CREDIT:001C  OPERATOR WORK TIME:000000000C
```

Example Call Type 7 AMA Record—Phase 2

```
HEX ID:AA  STRUCTURE CODE:40752C  CALL CODE:189C
SENSOR TYPE:036C  SENSOR ID:0000000C  REC OFFICE TYPE:036C
REC OFFICE ID:0000000C  DATE:90220C  TIMING IND:00000C
STUDY IND:0200000C  SERVICE OBSERVED:0C  ORIG NPA:613C
ORIG NUMBER:2391111C  CONNECT TIME:2245179C
ELAPSED TIME:000000122C  OPERATOR IDS:1020312003101C
ACC OPERATOR WORK TIME:00000C  SERVICE FEATURE:000C
STATION SIGNALING IND:2C  SCREENING CODE:000C
CALLED NUMBER INPUT:2C  CALLING NUMBER SOURCE:1C
MODULE CODE:058C  SERVICE DIFFICULTY DATE:90220C
SERVICE DIFFICULTY TIME:2245179C  OVERSEAS IND:0C
TERM NPA:00212C  TERM NUMBER:2201111C  COMPANY ID:FFFFFF
SERVICE DIFFICULTY:6C  NUMBER OF OCCURRENCES:001C
CHARGE ADJ INDICATOR:3C  AMOUNT OF CREDIT:FFFFFF
MINUTES OF CREDIT:FFFF  MODULE CODE:000C
```

TOPS Extended BCAMA-EBAF (continued)

Example 8

The call illustrated by this example consists of the following attributes:

- 121 call originating on an ATC trunk group
- Call receives dialing instruction service.

The sizes of the AMA record for the call type shown in Example 8 are as follows:

- Phase 0—44 bytes
- Phase 1—44 bytes
- Phase 2—70 bytes

The changes in the AMA record size for the call type shown in Example 8 are as follows:

- Phase 0 to phase 1: 0.0%
- Phase 0 to phase 2: +59.1%
- Phase 1 to phase 2: +59.1%

Example Call Type 8 AMA Record—Phase 0

```
HEX ID:AA  STRUCTURE CODE:00733C  CALL CODE:108C
SENSOR TYPE:036C  SENSOR ID:0000000C  REC OFFICE TYPE:036C
REC OFFICE ID:0000000C  PRESENT DATE:90220C
PRESENT TIME:2302575C  SERVICE OBSERVED:0C
INWARD SERVICE TYPE:001C  OPERATOR WORK TIME:000000270C
CARRIER PREFIX:01222C  OPERATOR NUMBER:1020312C
```

Example Call Type 8 AMA Record—Phase 1

```
HEX ID:AA  STRUCTURE CODE:00733C  CALL CODE:108C
SENSOR TYPE:036C  SENSOR ID:0000000C  REC OFFICE TYPE:036C
REC OFFICE ID0000000C  PRESENT DATE:90220C
PRESENT TIME:2303374C  SERVICE OBSERVED:0C
INWARD SERVICE TYPE:001C  OPERATOR WORK TIME:000000070C
CARRIER PREFIX:01222C  OPERATOR NUMBER:1020312C
```

Example Call Type 8 AMA Record—Phase 2

```
HEX ID:AA  STRUCTURE CODE:40751C  CALL CODE:197C
SENSOR TYPE:036C  SENSOR ID:0000000C  REC OFFICE TYPE:036C
REC OFFICE ID:0000000C  DATE:90220C  TIMING IND:00000C
STUDY IND:0200042C SERVICE OBSERVED:0C CONNECT TIME:2303571C
ELAPSED TIME:000000054C  OPERATOR IDS:1020312003101C
ACC OPERATOR WORK TIME:00050C  SOURCE OF REQUEST:20222C
CALLED NUMBER INPUT:1C  MODULE CODE:057C  SERVICE ID:007C
DATABASE QUERIED:999C  MEANS OF INFORMATION INPUT:1C
REQUEST COUNTER:001C  COMPANY ID:20222C  MODULE CODE:000C
```

Example 9

The call illustrated by this example consists of the following attributes:

- 121 call originating on an ATC trunk group
- Call receives DA service using an LSDB.

The sizes of the AMA record for the call type shown in Example 9 are as follows:

- Phase 0—44 bytes
- Phase 1—64 bytes
- Phase 2—98 bytes

The changes in the AMA record size for the call type shown in Example 9 are as follows:

- Phase 0 to phase 1: + 45.5%
- Phase 0 to phase 2: +122.7%
- Phase 1 to phase 2: + 53.1%

Example Call Type 9 AMA Record—Phase 0

```
HEX ID:AA  STRUCTURE CODE:10700C  CALL CODE:035C
SENSOR TYPE:036C  SENSOR ID:0619351C  REC OFFICE TYPE:036C
REC OFFICE ID:0619351C  DATE:60109C  TIMING IND:00000C
STUDY IND:0200012C  ANSWER:2C  SERVICE OBSERVED:0C
OPER ACTION:2C  SERVICE FEATURE:000C  ORIG NPA:000C
ORIG NUMBER:0000000C  OVERSEAS IND:1C  TERM NPA:00000C
TERM NUMBER:9967176C  CONNECT TIME:1817592C
ELAPSED TIME:000000000C  OPERATOR NUMBER:1020200C
OPERATOR WORK TIME:000000160C  TNN:0000123C
```

TOPS Extended BCAMA-EBAF (continued)

Example Call Type 9 AMA Record—Phase 1

```
HEX ID:AA  STRUCTURE CODE:50700C  CALL CODE:035C
SENSOR TYPE:036C  SENSOR ID:0619351C  REC OFFICE TYPE:036C
REC OFFICE ID:0619351C  DATE:60109C  TIMING IND:00000C
STUDY IND:0200012C  ANSWER:2C  SERVICE OBSERVED:0C
OPER ACTION:2C  SERVICE FEATURE:000C  ORIG NPA:000C
ORIG NUMBER:0000000C  OVERSEAS IND:1C  TERM NPA:00000C
TERM NUMBER:2339803C  CONNECT TIME:1818304C
ELAPSED TIME:000000170C  OPERATOR NUMBER:1020200C
OPERATOR WORK TIME:000000140C TNN:0002171C MODULE CODE:055C
SERVICE ID:001C  MEANS OF INFORMATION INPUT:1C
MEANS OF LSDB ACCESS:1C LSDBS BOC ID:12138C LSDB ACCESSES:FF
LISTING RESPONSE:2C  LISTING STATUS:111111200C
REQUEST COUNTER:001C  MODULE CODE:000C
```

Example Call Type 9 AMA Record—Phase 2

```
HEX ID:AA  STRUCTURE CODE:50751C  CALL CODE:195C
SENSOR TYPE:036C  SENSOR ID:0619351C  REC OFFICE TYPE:036C
REC OFFICE ID:619351C  DATE:60109C  TIMING IND:00000C
STUDY IND:0200012C SERVICE OBSERVED:0C CONNECT TIME:1818562C
ELAPSED TIME:000000187C  OPERATOR IDS:1020200003101C
ACC OPERATOR WORK TIME:00150C  SOURCE OF REQUEST:20888C
CALLED NUMBER INPUT:1C  TNN:0004219C  MODULE CODE:055C
SERVICE ID:001C  MEANS OF INFORMATION INPUT:1C
MEANS OF LSDB ACCESS:1C LSDBS BOC ID:12138C LSDB ACCESSES:FF
LISTING RESPONSE:2C  LISTING STATUS:111111200C
REQUEST COUNTER:001C MODULE CODE:307C LINE NUMBER TYPE:001C
NPA:00000C  LINE NUMBER:2477336C  MODULE CODE:000C
```

Example 10

The call illustrated by this example consists of the following attributes:

- 0+ carrier call originating on a TOPS trunk group
- Operating company provides operator services for carrier
- Call is billed to third number
- BVA query verified by operator
- Call completed.

The sizes of the AMA record for the call type shown in Example 10 are as follows:

- Phase 0—105 bytes
- Phase 1—116 bytes
- Phase 2—129 bytes

The changes in the AMA record size for the call type shown in Example 10 are as follows:

- Phase 0 to phase 1: +10.5%
- Phase 0 to phase 2: +22.9%
- Phase 1 to phase 2: +11.2%

Example Call Type 10 AMA Record—Phase 0

```
HEX ID:AA  STRUCTURE CODE:04718C  CALL CODE:015C
SENSOR TYPE:036C  SENSOR ID:0000000C  REC OFFICE TYPE:036C
REC OFFICE ID:0000000C  DATE:90220C  TIMING IND:00000C
STUDY IND:0200000C  ANSWER:0C  SERVICE OBSERVED:0C
OPER ACTION:0C  SERVICE FEATURE:000C  ORIG NPA:613C
ORIG NUMBER:2391111C  OVERSEAS IND:0C  TERM NPA:00212C
TERM NUMBER:2209999C  CONNECT TIME:2327507C
ELAPSED TIME:000000097C  OPERATOR NUMBER:1020312C
BILLING NUMBER:02122202345C DIALING RATE:4C RAO NUMBER:745C
BILLING NUMBER CONTENT:1C  BILLING VALID FILE:1C
CREDIT CARD FAIL:000C  OPERATOR WORK TIME:000001290C
IC/INC PREFIX:02220C  CC DATE:90220C  CC TIME:2327456C
ELAPSED CC.000000127C  IC/INC EVENT STATUS:010C
TRUNK GROUP NUMBER:00412C  ROUTING INDICATOR:1C
DIALING INDICATOR:1C  ANI INDICATOR:0C
```

TOPS Extended BCAMA-EBAF (continued)

Example Call Type 10 AMA Record—Phase 1

```
HEX ID:AA  STRUCTURE CODE:40700C  CALL CODE:015C
SENSOR TYPE:036C  SENSOR ID:0000000C  REC OFFICE TYPE:036C
REC OFFICE ID:0000000C  DATE:90220C  TIMING IND:00000C
STUDY IND:0200000C  ANSWER:0C  SERVICE OBSERVED:0C
OPER ACTION:0C  SERVICE FEATURE:000C  ORIG NPA:613C
ORIG NUMBER:2391111C  OVERSEAS IND:0C  TERM NPA:00212C
TERM NUMBER:2209999C  CONNECT TIME:2329044C
ELAPSED TIME:000000038C  OPERATOR NUMBER:1020312C
OPERATOR WORK TIME:000000350C  MODULE CODE:053C
IC/INC PREFIX:02222C  CC DATE:90220C  CC TIME:2328591C
ELAPSED CC:000000071C  IC/INC EVENT STATUS:010C
TRUNK GROUP NUMBER:10412C  SOURCE OF IC/INC CODE:3C
IC/INC AGREEMENT TABLE:1C  METHOD OF SIGNALING:010C
MODULE CODE:061C  BILLING TYPE ID:3C  RAO NUMBER:745C
BILLING NUMBER:02122202345C  BILLING VALID FILE:1C
CREDIT CARD FAIL:000C  OSS ACTION:3C
MEANS OF INPUT/RESPONSE:222C  SEQUENCE CALL COUNTER:FFFF
MODULE CODE:000C
```

Example Call Type 10 AMA Record—Phase 2

```
HEX ID:AA  STRUCTURE CODE:40752C  CALL CODE:192C
SENSOR TYPE:036C  SENSOR ID:0000000C  REC OFFICE TYPE:036C
REC OFFICE ID:0000000C  DATE:90220C  TIMING IND:00000C
STUDY IND:0200000C  SERVICE OBSERVED:0C  ORIG NPA:613C
ORIG NUMBER:2391111C  CONNECT TIME:2330123C
ELAPSED TIME:000000046C  OPERATOR IDS:1020312003101C
ACC OPERATOR WORK TIME:00410C  SERVICE FEATURE:000C
STATION SIGNALING IND:2C  SCREENING CODE:000C
CALLED NUMBER INPUT:1C  CALLING NUMBER SOURCE:1C
MODULE CODE:051C  OVERSEAS IND:0C  TERM NPA:00212C
TERM NUMBER:2209999C  COMPLETION IND:001C  RATE IND:1C
OSS CALL COMPLETION CONDITIONS:1111110C  MODULE CODE:053C
IC/INC PREFIX:02222C  CC DATE:90220C  CC TIME:2330070C
ELAPSED CC:000000078C  IC/INC EVENT STATUS:010C
TRUNK GROUP NUMBER:10412C  SOURCE OF IC/INC CODE:3C
IC/INC AGREEMENT TABLE:1C  METHOD OF SIGNALING:010C
MODULE CODE:061C  BILLING TYPE ID:3C  RAO NUMBER:745C
BILLING NUMBER:02122202345C  BILLING VALID FILE:1C
CREDIT CARD FAIL:000C  OSS ACTION:3C
MEANS OF INPUT/RESPONSE:222C  SEQUENCE CALL COUNTER:FFFF
MODULE CODE:000C
```

Example 11

The call illustrated by this example consists of the following attribute:

- RONI call arriving on RONI trunk to collect calling number.

The sizes of the AMA record for the call type shown in Example 11 are as follows:

- Phase 0—60 bytes
- Phase 1—60 bytes
- Phase 2—77 bytes

The changes in the AMA record size for the call type shown in Example 11 are as follows:

- Phase 0 to phase 1: 0.0%
- Phase 0 to phase 2: +28.3%
- Phase 1 to phase 2: +28.3%

Example Call Type 11 AMA Record—Phase 0

```
HEX ID:AA  STRUCTURE CODE:00730C  CALL CODE:250C
SENSOR TYPE:036C  SENSOR ID:0000000C  REC OFFICE TYPE:036C
REC OFFICE ID:0000000C  DATE:90220C  STUDY IND:0200030C
ANSWER:1C  SERVICE OBSERVED:0C  ORIG NPA:000C
ORIG NUMBER:2391111C  CONNECT TIME:2250236C
ELAPSED TIME:000000000C  OPERATOR NUMBER:1020312C
OPERATOR SERVICE FEAT:010C  CARRIER PREFIX:00000C
OPERATOR WORK TIME:000000060C
```

Example Call Type 11 AMA Record—Phase 1

```
HEX ID:AA  STRUCTURE CODE:00730C  CALL CODE:250C
SENSOR TYPE:036C  SENSOR ID:0000000C  REC OFFICE TYPE:036C
REC OFFICE ID:0000000C  DATE:90220C  STUDY IND:0200030C
ANSWER:1C  SERVICE OBSERVED:0C  ORIG NPA:613C
ORIG NUMBER:2391111C  CONNECT TIME:2250541C
ELAPSED TIME:000000034C  OPERATOR NUMBER:1020312C
OPERATOR SERVICE FEAT:010C  CARRIER PREFIX:00000C
OPERATOR WORK TIME:000000030C
```

TOPS Extended BCAMA-EBAF (continued)

Example Call Type 11 AMA Record—Phase 2

```
HEX ID:AA  STRUCTURE CODE:40752C  CALL CODE:196C
SENSOR TYPE:036C  SENSOR ID:0000000C  REC OFFICE TYPE:036C
REC OFFICE ID:0000000C  DATE:90220C  TIMING IND:00000C
STUDY IND:0200030C  SERVICE OBSERVED:0C  ORIG NPA:613C
ORIG NUMBER:2391111C  CONNECT TIME:2251172C
ELAPSED TIME:000000032C  OPERATOR IDS:1020312003101C
ACC OPERATOR WORK TIME:00030C  SERVICE FEATURE:000C
STATION SIGNALING IND:9C  SCREENING CODE:000C
CALLED NUMBER INPUT:1C  CALLING NUMBER SOURCE:3C
MODULE CODE:057C  SERVICE ID:011C  DATABASE QUERIED:999C
MEANS OF INFORMATION INPUT1C  REQUEST COUNTER:001C
COMPANY ID:22548C  MODULE CODE:000C
```

Example 12

The call illustrated by this example consists of the following attributes:

- 1+ CAMA call originating on a TOPS trunk group
- No operator handling
- Call completed and receives answer supervision.

The sizes of the AMA record for the call type shown in Example 12 are as follows:

- Phase 0—69 bytes
- Phase 1—60 bytes
- Phase 2—60 bytes

The changes in the AMA record size for the call type shown in Example 12 are as follows:

- Phase 0 to phase 1: -14.4%
- Phase 0 to phase 2: -14.4%
- Phase 1 to phase 2: 0.0%

Example Call Type 12 AMA Record—Phase 0

```
HEX ID:AA  STRUCTURE CODE:00700C  CALL CODE:006C
SENSOR TYPE:036C  SENSOR ID:0000000C  REC OFFICE TYPE:036C
REC OFFICE ID:0000000C  DATE:90220C  TIMING IND:00000C
STUDY IND:0200000C  ANSWER:0C  SERVICE OBSERVED:0C
OPER ACTION:0C  SERVICE FEATURE:000C  ORIG NPA:613C
ORIG NUMBER:2391111C  OVERSEAS IND:0C  TERM NPA:00212C
TERM NUMBER:2201111C  CONNECT TIME:2253019C
 ELAPSED TIME:000000034C  OPERATOR NUMBER:0003101C
OPERATOR WORK TIME:000000000C
```

Example Call Type 12 AMA Record—Phase 1

```
HEX ID:AA  STRUCTURE CODE:00001C  CALL CODE:006C
SENSOR TYPE:036C  SENSOR ID:0000000C  REC OFFICE TYPE:036C
REC OFFICE ID:0000000C  DATE:90220C  TIMING IND:00000C
STUDY IND:0200000C  ANSWER:0C  SERVICE OBSERVED:0C
OPER ACTION:0C  SERVICE FEATURE:000C  ORIG NPA:613C
ORIG NUMBER:2391111C  OVERSEAS IND:0C  TERM NPA:00212C
TERM NUMBER:2201111C  CONNECT TIME:2253277C
 ELAPSED TIME:000000048C
```

Example Call Type 12 AMA Record—Phase 2

```
HEX ID:AA  STRUCTURE CODE:00001C  CALL CODE:006C
SENSOR TYPE:036C  SENSOR ID:0000000C  REC OFFICE TYPE:036C
REC OFFICE ID:0000000C  DATE:90220C  TIMING IND:00000C
STUDY IND:0200000C  ANSWER:0C  SERVICE OBSERVED:0C
OPER ACTION:0C  SERVICE FEATURE:000C  ORIG NPA:613C
ORIG NUMBER:2391111C  OVERSEAS IND:0C  TERM NPA:00212C
TERM NUMBER:2201111C  CONNECT TIME:2253513C
 ELAPSED TIME:000000046C
```

Example 13

The call illustrated by this example consists of the following attributes:

- 1+ CAMA call originating on a TOPS trunk group
- ANI failure
- Operator handled
- Call completed (receives answer supervision).

TOPS Extended BCAMA-EBAF (continued)

The sizes of the AMA record for the call type shown in Example 13 are as follows:

- Phase 0—69 bytes
- Phase 1—69 bytes
- Phase 2—84 bytes

The changes in the AMA record size for the call type shown in Example 13 are as follows:

- Phase 0 to phase 1: 0.0%
- Phase 0 to phase 2: +21.7%
- Phase 1 to phase 2: +21.7%

Example Call Type 13 AMA Record—Phase 0

```
HEX ID:AA  STRUCTURE CODE:00700C  CALL CODE:006C
SENSOR TYPE:036C  SENSOR ID:0000000C  REC OFFICE TYPE:036C
REC OFFICE ID:0000000C  DATE:90220C  TIMING IND:00000C
STUDY IND:0200010C  ANSWER:0C  SERVICE OBSERVED:0C
OPER ACTION:2C  SERVICE FEATURE:000C  ORIG NPA:613C
ORIG NUMBER:2391111C  OVERSEAS IND:0C  TERM NPA:00212C
TERM NUMBER:2201111C  CONNECT TIME:2255275C
ELAPSED TIME:000000028C  OPERATOR NUMBER:1020312C
OPERATOR WORK TIME:000000040C
```

Example Call Type 13 AMA Record—Phase 1

```
HEX ID:AA  STRUCTURE CODE:00700C  CALL CODE:006C
SENSOR TYPE:036C  SENSOR ID:0000000C  REC OFFICE TYPE:036C
REC OFFICE ID:0000000C  DATE:90220C  TIMING IND:00000C
STUDY IND:0200010C  ANSWER:0C  SERVICE OBSERVED:0C
OPER ACTION:2C  SERVICE FEATURE:000C  ORIG NPA:613C
ORIG NUMBER:2391111C  OVERSEAS IND:0C  TERM NPA:00212C
TERM NUMBER:2201111C  CONNECT TIME:2255517C
ELAPSED TIME:000000046C  OPERATOR NUMBER:1020312C
OPERATOR WORK TIME:000000040C
```

Example Call Type 13 AMA Record—Phase 2

```
HEX ID:AA  STRUCTURE CODE:40752C  CALL CODE:192C
SENSOR TYPE:036C  SENSOR ID:0000000C  REC OFFICE TYPE:036C
REC OFFICE ID:0000000C  DATE:90220C  TIMING IND:00000C
STUDY IND:0200010C  SERVICE OBSERVED:0C  ORIG NPA:613C
ORIG NUMBER:2391111C  CONNECT TIME:2256160C
ELAPSED TIME000000036C  OPERATOR IDS:1020312003101C
ACC OPERATOR WORK TIME:00040C  SERVICE FEATURE:000C
STATION SIGNALING IND:2C  SCREENING CODE:000C
CALLED NUMBER INPUT:1C  CALLING NUMBER SOURCE:3C
MODULE CODE:051C  OVERSEAS IND:0C  TERM NPA:00212C
TERM NUMBER:2201111C  COMPLETION IND:001C  RATE IND:1C
OSS CALL COMPLETION CONDITIONS:1111110C  MODULE CODE:000C
```

Comparison of AMA across phases

In the comparison that follows:

- SCI = Structure code index
- CCI = Call type code index
- MCI = Module code index

Comparison of AMA across phases

	Phase 0			Phase 1			Phase 2		
Example	**SCI**	**CCI**	**MCI**	**SCI**	**CCI**	**MCI**	**SCI**	**CCI**	**MCI**
1	00700	010		00700	010		40752	192	051 000
2	00718	015		40700	015	052 000	40752	192	051 052 000
3	00705	010		40700	010	060 000	40752	192	051 060 000
4	00700	016		40700	016	050 000	40752	192	050 051 000

TOPS Extended BCAMA-EBAF (continued)

Comparison of AMA across phases

	Phase 0			Phase 1			Phase 2		
Example	**SCI**	**CCI**	**MCI**	**SCI**	**CCI**	**MCI**	**SCI**	**CCI**	**MCI**
5	00718	015		40700	015	061 000	40752	192	051 061 000
6	00700	010		40700	009	055 000	40752	194	055 307 000
7	00731	107		00731	107		40752	189	058 000
8	00733	108		00733	108		40751	197	057 000
9	00733	108		40733	108	055 000	40751	195	055 307 000
10	04718	015		40700	015	053 061 000	40752	192	051 053 061 000
11	00730	250		00730	250		40752	196	057 000
12	00700	006		00001	006		00001	006	
13	00700	006		00700	006		40752	192	051 000

Bellcore TOPS EBAF phase 2 call, module, and structure codes

This section contains descriptions for the following:

- Structure Codes 00001, 00002, 00101, 00625, 00627, 00751, and 00752
- Call Codes 189—199 and 215
- Module Codes 000, 022, 050—062, 066, and 307

Since only one service module can be included in any given AMA record, and conflicts can occur between different services for a given call, the following hierarchy is given for the production of service modules (highest to lowest):

1. Credit Recording (058)
2. Listing Services (055)
3. Busy Line Verification (056)
4. Call Completion (051)
5. General Assistance (057)

Phase 2 also changes the structure code received for 1+ CAMA calls. CAMA calls that do not require operator handling receive one of the following structure codes: 00001, 00002, 00101, 00625 or 00627.

Record: Structure Code 00001

Structure code 00001 is used for a non-carrier call originating directly from an end office on a TOPS trunk that receives call completion service and does not require operator handling. The call is a 1+ CAMA call that is answered and not long duration. No modules are appended to this structure code.

Call type code 006 (Station Paid) is associated with structure code 00001 in Phase 2.

Following is an example AMA record.

AMA Record with Structure Code 00001 (Phase 2)

```
HEX ID:AA  STRUCTURE CODE:00001C  CALL CODE:006C
SENSOR TYPE:036C  SENSOR ID:0000000C  REC OFFICE TYPE:036C
REC OFFICE ID:0000000C  DATE:80217C  TIMING IND:00000C
STUDY IND:0200000C  CLD PTY OFF-HK:0C  SERVICE OBSERVED:0C
OPER ACTION:0C  SERVICE FEATURE:000C
ORIG NPA:613C  ORIG NUMBER:2391234C  OVERSEAS IND:1C
TERM NPA:00212C  TERM NUMBER:2208978C
CONNECT TIME:0427380C  ELAPSED TIME:000002360C
```

TOPS Extended BCAMA-EBAF (continued)

Record: Structure Code 00002

Structure code 00002 is used for a non-carrier call originating directly from an end office on a TOPS trunk that receives call completion service and does not require operator handling. The call is a 1+ CAMA call that is unanswered. No modules are appended to this structure code.

Call type code 006 (Station Paid) is associated with structure code 00002 in Phase 2.

Followed by an example AMA record.

AMA Record with Structure Code 00002 (Phase 2)

```
HEX ID:AA  STRUCTURE CODE:10002C  CALL CODE:006C
SENSOR TYPE:036C  SENSOR ID:0000000C  REC OFFICE TYPE:036C
REC OFFICE ID:0000000C  DATE:80217C  TIMING IND:00000C
STUDY IND:0220000C CLD PTY OFF-HK:1C SERVICE OBSERVED:0C
OPER ACTION:0C  SERVICE FEATURE:000C
ORIG NPA:613C  ORIG NUMBER:2391234C  OVERSEAS IND:1C
TERM NPA:00212C  TERM NUMBER:2208978C
CONNECT TIME:0427380C  ELAPSED TIME:000000000C
CIRCUIT DATE:80217C  CIRCUIT TIME:0427420C
TNN:000423C
```

Record: Structure Code 00101

Structure code 00101 is used for a non-carrier call originating directly from an end office on a TOPS trunk that receives call completion service and does not require operator handling. The call is a 1+ CAMA call that is answered and long duration. No modules are appended to this structure code.

Call type code 006 (Station Paid) is associated with structure code 00101 in Phase 2.

Following is an example AMA record.

AMA Record with Structure Code 00010 (Phase 2)

```
HEX ID:AA  STRUCTURE CODE:00101C  CALL CODE:006C
SENSOR TYPE:036C  SENSOR ID:0000000C  REC OFFICE TYPE:036C
REC OFFICE ID:0000000C  DATE:80217C  TIMING IND:00200C
STUDY IND:0200000C  CLD PTY OFF-HK:0C  SERVICE OBSERVED:0C
OPER ACTION:0C  SERVICE FEATURE:000C
ORIG NPA:613C  ORIG NUMBER:2391234C  OVERSEAS IND:1C
TERM NPA:00212C  TERM NUMBER:2208978C
CONNECT TIME:0427380C  ELAPSED TIME:000000000C
PRESENT DATE:80220C  PRESENT TIME:0854030C
```

Record: Structure Code 00625

Structure code 00625 is used for a carrier call originating directly from an end office on a TOPS trunk that receives call completion service and does not require operator handling. The call is a 1+ CAMA call that is not long duration. No modules are appended to this structure code.

Call type codes 110 (FGD Originating) and 134 (FGB Originating) are associated with structure code 00625 in Phase 2.

Following is an example AMA record.

AMA Record with Structure Code 00625 (Phase 2)

```
HEX ID:AA  STRUCTURE CODE:00625C  CALL CODE:110C
SENSOR TYPE:036C  SENSOR ID:0000000C  REC OFFICE TYPE:036C
REC OFFICE ID:0000000C  DATE:80217C  TIMING IND:00000C
STUDY IND:0200000C  CLD PTY OFF-HK:0C  SERVICE OBSERVED:0C
OPER ACTION:0C  SERVICE FEATURE:000C
ORIG NPA:613C  ORIG NUMBER:2391234C  OVERSEAS IND:1C
TERM NPA:00212C  TERM NUMBER:2208978C
ANSWER TIME:0427380C  ELAPSED TIME:000001250C
IC/INC PREFIX:02882C  CC DATE:80217C  CC TIME:0427400C
ELAPSED CC:000001273C  IC/INC EVENT STATUS:010C
TRUNK GROUP NUMBER:00423C  ROUTING INDICATOR:1C
DIALING INDICATOR:0C  ANI INDICATOR:1C
```

Record: Structure Code 00627

Structure code 00625 is used for a carrier call originating directly from an end office on a TOPS trunk that receives call completion service and does not require operator handling. The call is a 1+ CAMA call that is long duration. No modules are appended to this structure code.

Call type codes 110 (FGD Originating) and 134 (FGB Originating) are associated with structure code 00627 in Phase 2.

Following is an example AMA record.

TOPS Extended BCAMA-EBAF (continued)

AMA Record with Structure Code 00627 (Phase 2)

```
HEX ID:AA  STRUCTURE CODE:00627C  CALL CODE:134C
SENSOR TYPE:036C  SENSOR ID:0000000C  REC OFFICE TYPE:036C
REC OFFICE ID:0000000C  DATE:80217C  TIMING IND:00200C
STUDY IND:0200000C  CLD PTY OFF-HK:0C SERVICE OBSERVED:0C
OPER ACTION:0C  SERVICE FEATURE:000C
ORIG NPA:613C  ORIG NUMBER:2391234C  OVERSEAS IND:1C
TERM NPA:00000C  TERM NUMBER:0000000C
ANSWER TIME:0427380C  ELAPSED TIME:005371250C
IC/INC PREFIX:02882C  CC DATE:80217C  CC TIME:0427400C
ELAPSED CC:005371273C  IC/INC EVENT STATUS:010C
TRUNK GROUP NUMBER:00423C  ROUTING INDICATOR:1C
DIALING INDICATOR:0C  ANI INDICATOR:1C
CIRCUIT DATE:80210C  CIRCUIT TIME:0849210C
```

Record: Structure Code 00751

Structure code 00751 is a new structure code for EBAF. This structure code should be used for all calls originating on an IT or ATC trunk from a corporate entity, not directly from an end office. An example is an Inward call.

This structure code contains AMA tables that use datafill as follows:

- Table 3 (Sensor ID)—Value from OFFICE_ID_ON_AMA_TAPE in table OFCENG.
- Table 5 (Recording Office ID)—Value from OFFICE_ID_ON_AMA_TAPE in table OFCENG.
- Table 296 (Operator ID)
  - — Team number from table TOPSPOS
  - — Nil operator number is 3101 or 9999 if TOPS_EXPANDED_OPRNUM = N or Y, respectively, in table OFCENG.

Following is an example AMA record.

AMA Record with Structure Code 00751 (Phase 2)

```
HEX ID:AA  STRUCTURE CODE:40751C  CALL CODE:193C
SENSOR TYPE:036C  SENSOR ID:0000000C  REC OFFICE TYPE:036C
REC OFFICE ID:0000000C  DATE:80217C  TIMING IND:00000C
STUDY IND:0200000C  SERVICE OBSERVED:0C
CONNECT TIME:0427380C  ELAPSED TIME:000000000C
OPERATOR IDS:1010200009999C  ACC OPERATOR WORK TIME:00230C
SOURCE OF REQUEST:FFFFFF  CALLED NUMBER INPUT:1C
MODULE CODE:051C  OVERSEAS IND:1C  TERM NPA:00212C
TERM NUMBER:2208978C  COMPLETION IND:001C
RATE IND:1C  OSS CALL COMPLETION CONDITIONS:1111110C
MODULE CODE:000C
```

Record: Structure Code 00752

Structure code 00752 is a new structure code for EBAF. It should be used for all calls originating on a TOPS trunk directly from an end office or originating on a RONI trunk. This structure code contains some AMA tables that use datafill as follows:

- Table 3 (Sensor ID)—Value from OFFICE_ID_ON_AMA_TAPE in table OFCENG.
- Table 5 (Recording Office ID)—Value from OFFICE_ID_ON_AMA_TAPE in table OFCENG.
- Table 296 (Operator ID)
  - — Team number from table TOPSPOS
  - — Nil operator number is 3101 or 9999 if TOPS_EXPANDED_OPRNUM = N or Y, respectively, in table OFCENG.
- Table 403 (Accumulated Operator Work Time)
  - — Coin calls are indicated by table TRKSGRP
  - — Table TAXMAP is used for sent and non-sent paid hotel calls
- Table 34 (Station Signaling Indicator)

  Table 34 records the Screening Code. This field indicates whether a call is marked for screening. If so, then the index into table Restricted Billing (RESTBIL) is recorded. The index into table RESTBIL is obtained from the Special Directory Number Identification (SPLDNID) table, which is customer datafillable.

Following is an example AMA record.

TOPS Extended BCAMA-EBAF (continued)

AMA Record with Structure Code 00752 (Phase 2)

```
HEX ID:AA  STRUCTURE CODE:40752C  CALL CODE:192C
SENSOR TYPE:036C  SENSOR ID:0000000C  REC OFFICE TYPE:036C
REC OFFICE ID:0000000C  DATE:80217C  TIMING IND:00000C
STUDY IND:0200000C  SERVICE OBSERVED:0C  ORIG NPA:613C
ORIG NUMBER:2391234C  CONNECT TIME:0427380C
ELAPSED TIME:000000236C  OPERATOR IDS:1010200009999C
ACC OPERATOR WORK TIME:00250C  SERVICE FEATURE:000C
STATION SIGNALING IND:2C  SCREENING CODE:000C
CALLED NUMBER INPUT:1C  CALLING NUMBER SOURCE:1C
MODULE CODE:051C  OVERSEAS IND:1C  TERM NPA:00212C
TERM NUMBER:2208978C  COMPLETION IND:001C
RATE IND:1C  OSS CALL COMPLETION CONDITIONS:1111110C
MODULE CODE:000C
```

Record: Call Code 189

Call Code 189 is a new call code for EBAF. It indicates an originating call provided with a Credit Recording Service. This call code must be recorded with structure code 00752.

Following is an example AMA record.

AMA Record with Call Code 189 (Phase 2)

```
HEX ID:AA  STRUCTURE CODE:40752C  CALL CODE:189C
SENSOR TYPE:036C  SENSOR ID:0000000C  REC OFFICE TYPE:036C
REC OFFICE ID:0000000C  DATE:80217C  TIMING IND:00000C
STUDY IND:0200000C  SERVICE OBSERVED:0C  ORIG NPA:613C
ORIG NUMBER:2391234C  CONNECT TIME:0427380C
ELAPSED TIME:000000251C  OPERATOR IDS:1010200009999C
ACC OPERATOR WORK TIME:00250C  SERVICE FEATURE:000C
STATION SIGNALING IND:2C  SCREENING CODE:000C
CALLED NUMBER INPUT:1C  CALLING NUMBER SOURCE:1C
MODULE CODE:058C  SERVICE DIFFICULTY DATE:80217C
SERVICE DIFFICULTY TIME:0427380  OVERSEAS IND:1C
TERM NPA:00212C  TERM NUMBER:2203333C  COMPANY ID:FFFFFF
SERVICE DIFFICULTY:4C  NUMBER OF OCCURRENCES:001C
CHARGE ADJ INDICATOR:2C  AMOUNT OF CREDIT:00050C
MINUTES OF CREDIT:FFFF  MODULE CODE:000C
```

Record: Call Code 190

Call Code 190 is a new call code for EBAF. It indicates an originating call provided with a Carrier Identification Processing but no Service Processing. This call code must be recorded with structure code 00752.

Following is an example AMA record.

AMA Record with Call Code 190 (Phase 2)

```
HEX ID:AA  STRUCTURE CODE:40752C  CALL CODE:190C
SENSOR TYPE:036C  SENSOR ID:0000000C  REC OFFICE TYPE:036C
REC OFFICE ID:0000000C  DATE:80217C  TIMING IND:00000C
STUDY IND:0200000C  SERVICE OBSERVED:0C  ORIG NPA:613C
ORIG NUMBER:2391234C  CONNECT TIME:0427380C
ELAPSED TIME:000000000C  OPERATOR IDS:1010200009999C
ACC OPERATOR WORK TIME:00250C  SERVICE FEATURE:000C
STATION SIGNALING IND:2C  SCREENING CODE:000C
CALLED NUMBER INPUT:1C  CALLING NUMBER SOURCE:1C
MODULE CODE:054C  IC/INC PREFIX:03332C
SOURCE OF IC/INC CODE:3C  IC/INC CHECKS:29999C
MODULE CODE:000C
```

Record: Call Code 191

Call Code 191 is a new call code for EBAF. It indicates a terminating call provided with a Carrier Identification Processing but no Service Processing. This call code must be recorded with structure code 00751.

Following is an example AMA record.

AMA Record with Call Code 191 (Phase 2)

```
HEX ID:AA  STRUCTURE CODE:40751C  CALL CODE:191C
SENSOR TYPE:036C  SENSOR ID:0000000C  REC OFFICE TYPE:036C
REC OFFICE ID:0000000C  DATE:80217C  TIMING IND:00000C
STUDY IND:0200040C  SERVICE OBSERVED:0C
CONNECT TIME:0427380C  ELAPSED TIME:000001290C
OPERATOR IDS:1010200009999C  ACC OPERATOR WORK TIME:00230C
SOURCE OF REQUEST:20333C  CALLED NUMBER INPUT:1C
MODULE CODE:054C  IC/INC PREFIX:03332C
SOURCE OF IC/INC CODE:6C  IC/INC CHECKS:29999C
MODULE CODE:000C
```

Record: Call Code 192

Call Code 192 is a new call code for EBAF. It indicates an originating call provided with Call Completion Service. This call code must be recorded with structure code 00752.

Following is an example AMA record.

TOPS Extended BCAMA-EBAF (continued)

AMA Record with Call Code 192 (Phase 2)

```
HEX ID:AA  STRUCTURE CODE:40752C  CALL CODE:192C
SENSOR TYPE:036C  SENSOR ID:0000000C  REC OFFICE TYPE:036C
REC OFFICE ID:0000000C  DATE:80217C  TIMING IND:00000C
STUDY IND:0200000C  SERVICE OBSERVED:0C  ORIG NPA:613C
ORIG NUMBER:2391234C  CONNECT TIME:0427380C
ELAPSED TIME:000002140C  OPERATOR IDS:1010200009999C
ACC OPERATOR WORK TIME:00250C  SERVICE FEATURE:000C
STATION SIGNALING IND:2C  SCREENING CODE:000C
CALLED NUMBER INPUT:1C  CALLING NUMBER SOURCE:1C
MODULE CODE:051C  OVERSEAS IND:1C  TERM NPA:00212C
TERM NUMBER:2208978C  COMPLETION IND:001C
RATE IND:1C  OSS CALL COMPLETION CONDITIONS:1111110C
MODULE CODE:000C
```

Record: Call Code 193

Call Code 193 is a new call code for EBAF. It indicates a terminating call provided with Call Completion Service. This call code must be recorded with structure code 00751.

Following is an example AMA record.

AMA Record with Call Code 193 (Phase 2)

```
HEX ID:AA  STRUCTURE CODE:40751C  CALL CODE:193C
SENSOR TYPE:036C  SENSOR ID:0000000C  REC OFFICE TYPE:036C
REC OFFICE ID:0000000C  DATE:80217C  TIMING IND:00000C
STUDY IND:0200000C  SERVICE OBSERVED:0C
CONNECT TIME:0427380C  ELAPSED TIME:000001290C
OPERATOR IDS:1010200009999C  ACC OPERATOR WORK TIME:00230C
SOURCE OF REQUEST:00000C  CALLED NUMBER INPUT:1C
MODULE CODE:051C  OVERSEAS IND:1C  TERM NPA:00212C
TERM NUMBER:2208978C  COMPLETION IND:001C
RATE IND:1C  OSS CALL COMPLETION CONDITIONS:1111110C
MODULE CODE:000C
```

Record: Call Code 194

Call Code 194 is a new call code for EBAF. It indicates an originating call provided with a Listing Service. This call code must be recorded with structure code 00752.

Following is an example AMA record.

AMA Record with Call Code 194 (Phase 2)

```
HEX ID:AA  STRUCTURE CODE:50752C  CALL CODE:194C
SENSOR TYPE:036C  SENSOR ID:0000000C  REC OFFICE TYPE:036C
REC OFFICE ID:0000000C  DATE:80217C  TIMING IND:00000C
STUDY IND:0200000C  SERVICE OBSERVED:0C  ORIG NPA:613C
ORIG NUMBER:2391234C  CONNECT TIME:0427380C
ELAPSED TIME:000000260C  OPERATOR IDS:1010200009999C
ACC OPERATOR WORK TIME:00250C  SERVICE FEATURE:000C
STATION SIGNALING IND:2C  SCREENING CODE:000C
CALLED NUMBER INPUT:1C  CALLING NUMBER SOURCE:1C
TNN:0000423C  MODULE CODE:055C  SERVICE ID:001C
MEANS OF INFORMATION INPUT:1C  MEANS OF LSDB ACCESS:1C
LSDBS BOC ID:13333C  LSDB ACCESSES:FF  LISTING RESPONSE:2C
LISTING STATUS:111111100C  REQUEST COUNTER:001C
MODULE CODE:000C
```

Record: Call Code 195

Call Code 195 is a new call code for EBAF. It indicates a terminating call provided with a Listing Service. This call code must be recorded with structure code 00751.

Following is an example AMA record.

AMA Record with Call Code 195 (Phase 2)

```
HEX ID:AA  STRUCTURE CODE:50751C  CALL CODE:195C
SENSOR TYPE:036C  SENSOR ID:0000000C  REC OFFICE TYPE:036C
REC OFFICE ID:0000000C  DATE:80217C  TIMING IND:00000C
STUDY IND:0200000C  SERVICE OBSERVED:0C
CONNECT TIME:0427380C  ELAPSED TIME:000001290C
OPERATOR IDS:1010200009999C  ACC OPERATOR WORK TIME:00230C
SOURCE OF REQUEST:00000C  CALLED NUMBER INPUT:1C
TNN:0000423C  MODULE CODE:055C  SERVICE ID:001C
MEANS OF INFORMATION INPUT:1C  MEANS OF LSDB ACCESS:1C
LSDBS BOC ID:13333C  LSDB ACCESSES:FF  LISTING RESPONSE:2C
LISTING STATUS:111111100C  REQUEST COUNTER:001C
MODULE CODE:000C
```

Record: Call Code 196

Call Code 196 is a new call code for EBAF. It indicates an originating call provided with a General Assistance Service. This call code must be recorded with structure code 00752.

Following is an example AMA record.

TOPS Extended BCAMA-EBAF (continued)

AMA Record with Call Code 196 (Phase 2)

```
HEX ID:AA  STRUCTURE CODE:50752C  CALL CODE:196C
SENSOR TYPE:036C  SENSOR ID:0000000C  REC OFFICE TYPE:036C
REC OFFICE ID:0000000C  DATE:80217C  TIMING IND:00000C
STUDY IND:0200000C  SERVICE OBSERVED:0C  ORIG NPA:613C
ORIG NUMBER:2391234C  CONNECT TIME:0427380C
ELAPSED TIME:000000260C  OPERATOR IDS:1010200009999C
ACC OPERATOR WORK TIME:00250C  SERVICE FEATURE:000C
STATION SIGNALING IND:2C  SCREENING CODE:000C
CALLED NUMBER INPUT:1C  CALLING NUMBER SOURCE:1C
TNN:0000423C  MODULE CODE:057C  SERVICE ID:009C
DATABASE QUERIED:999C  MEANS OF INFORMATION INPUT:1C
REQUEST COUNTER:001C  COMPANY ID:FFFFFF
MODULE CODE:000C
```

Record: Call Code 197

Call Code 197 is a new call code for EBAF. It indicates a terminating call provided with a General Assistance Service. This call code must be recorded with structure code 00751.

Following is an example AMA record.

AMA Record with Call Code 197 (Phase 2)

```
HEX ID:AA  STRUCTURE CODE:50751C  CALL CODE:197C
SENSOR TYPE:036C  SENSOR ID:0000000C  REC OFFICE TYPE:036C
REC OFFICE ID:0000000C  DATE:80217C  TIMING IND:00000C
STUDY IND:0200000C  SERVICE OBSERVED:0C
CONNECT TIME:0427380C  ELAPSED TIME:000001290C
OPERATOR IDS:1010200009999C  ACC OPERATOR WORK TIME:00230C
SOURCE OF REQUEST:00000C  CALLED NUMBER INPUT:1C
TNN:0000423C  MODULE CODE:057C  SERVICE ID:009C
DATABASE QUERIED:999C  MEANS OF INFORMATION INPUT:1C
REQUEST COUNTER:001C  COMPANY ID:20222C
MODULE CODE:000C
```

Record: Call Code 198

Call Code 198 is a new call code for EBAF. It indicates an originating call provided with a Busy Line Verification Service. This call code must be recorded with structure code 00752.

Following is an example AMA record.

AMA Record with Call Code 198 (Phase 2)

```
HEX ID:AA  STRUCTURE CODE:50752C  CALL CODE:198C
SENSOR TYPE:036C  SENSOR ID:0000000C  REC OFFICE TYPE:036C
REC OFFICE ID:0000000C  DATE:80217C  TIMING IND:00000C
STUDY IND:0200000C  SERVICE OBSERVED:0C  ORIG NPA:613C
ORIG NUMBER:2391234C  CONNECT TIME:0427380C
ELAPSED TIME:000000246C  OPERATOR IDS:1010200009999C
ACC OPERATOR WORK TIME:00250C  SERVICE FEATURE:000C
STATION SIGNALING IND:2C  SCREENING CODE:000C
CALLED NUMBER INPUT:1C  CALLING NUMBER SOURCE:1C
TNN:0000423C  MODULE CODE:056C  NPA VERIFIED:00613C
NUMBER VERIFIED:6211007C  MEANS OF REPORT PROVISION:1C
BLV/INTERRUPT RESULT:919C  MODULE CODE:000C
```

Record: Call Code 199

Call Code 199 is a new call code for EBAF. It indicates a terminating call provided with a Busy Line Verification Service. This call code must be recorded with structure code 00751.

Following is an example AMA record.

AMA Record with Call Code 199 (Phase 2)

```
HEX ID:AA  STRUCTURE CODE:50751C  CALL CODE:199C
SENSOR TYPE:036C  SENSOR ID:0000000C  REC OFFICE TYPE:036C
REC OFFICE ID:0000000C  DATE:80217C  TIMING IND:00000C
STUDY IND:0200000C  SERVICE OBSERVED:0C
CONNECT TIME:0427380C  ELAPSED TIME:000000228C
OPERATOR IDS:1010200009999C  ACC OPERATOR WORK TIME:00230C
SOURCE OF REQUEST:00000C  CALLED NUMBER INPUT:1C
TNN:0000423C  MODULE CODE:056C  NPA VERIFIED:00613C
NUMBER VERIFIED:6211007C  MEANS OF REPORT PROVISION:1C
BLV/INTERRUPT RESULT:919C  MODULE CODE:000C
```

Record: Call Code 215

Call Code 215 is a new call code for EBAF. It indicates a terminating call provided with Intercept Service. This call code must be recorded with structure code 00751.

Following is an example AMA record.

TOPS Extended BCAMA-EBAF (continued)

AMA Record with Call Code 215 (Phase 2)

```
HEX ID:AA  STRUCTURE CODE:50751C  CALL CODE:215C
SENSOR TYPE:036C  SENSOR ID:0000000C  REC OFFICE TYPE:036C
REC OFFICE ID:0000000C  DATE:00428C  TIMING IND:00000C
STUDY IND:0200000C  SERVICE OBSERVED:0C
CONNECT TIME:0427380C  ELAPSED TIME:000005320C
OPERATOR IDS:0009999009999C  ACC OPERATOR WORK TIME:00000C
SOURCE OF REQUEST:FFFFFF  CALLED NUMBER INPUT:1C
MODULE CODE:066C  SERVICE ID:015C  MEANS OF LSDB ACCESS:1C
LISTING RESPONSE:6C  BILLING NUMBER:02122208978C
OVERSEAS IND:1C  TERM NPA:00919C  TERM NUMBER:2391234C
MODULE CODE:000C
```

Record: Module Code 000—Final

Module code 000 is a new module for TOPS EBAF. It indicates the final module attached to a structure code. All TOPS EBAF structure codes contain this module at the end of the AMA record if one or more data modules are appended to the record.

Following is an example AMA record.

AMA Record with Module Code 000 (Phase 2)

```
HEX ID:AA  STRUCTURE CODE:40752C  CALL CODE:192C
SENSOR TYPE:036C  SENSOR ID:0000000C  REC OFFICE TYPE:036C
REC OFFICE ID:0000000C  DATE:80217C  TIMING IND:00000C
STUDY IND:0200000C  SERVICE OBSERVED:0C  ORIG NPA:613C
ORIG NUMBER:2391234C  CONNECT TIME:0427380C
ELAPSED TIME:000003130C  OPERATOR IDS:1010200009999C
ACC OPERATOR WORK TIME:00250C  SERVICE FEATURE:000C
STATION SIGNALING IND:2C  SCREENING CODE:000C
CALLED NUMBER INPUT:1C  CALLING NUMBER SOURCE:1C
MODULE CODE:051C  OVERSEAS IND:1C  TERM NPA:00212C
TERM NUMBER:2208978C  COMPLETION IND:001C
RATE IND:1C  OSS CALL COMPLETION CONDITIONS:1111110C
MODULE CODE:000C
```

Record: Module Code 022—Long Duration

Module code 022 is a new module for TOPS EBAF. It indicates a Long Duration Call. A call is considered long duration if it is up over two midnights.

TOPS produces only one AMA record for a long duration call. The record produced is a *continuation* record. This does not conform to the requirements put forth by Bellcore.

Following is an example AMA record.

AMA Record with Module Code 022 (Phase 2)

```
HEX ID:AA  STRUCTURE CODE:40752C  CALL CODE:192C
SENSOR TYPE:036C  SENSOR ID:0000000C  REC OFFICE TYPE:036C
REC OFFICE ID:0000000C  DATE:80217C  TIMING IND:00200C
STUDY IND:0200000C  SERVICE OBSERVED:0C  ORIG NPA:613C
ORIG NUMBER:2391234C  CONNECT TIME:0427380C
ELAPSED TIME:002955320C  OPERATOR IDS:1010200009999C
ACC OPERATOR WORK TIME:00250C  SERVICE FEATURE:000C
STATION SIGNALING IND:2C  SCREENING CODE:000C
CALLED NUMBER INPUT:1C  CALLING NUMBER SOURCE:1C
MODULE CODE:022C  PRESENT DATE:80219C
PRESENT TIME:0543100C  MODULE CODE:051C
OVERSEAS IND:1C  TERM NPA:00212C  TERM NUMBER:2208978C
COMPLETION IND:001C  RATE IND:1C
OSS CALL COMPLETION CONDITIONS:1111110C  MODULE CODE:000C
```

Record: Module Code 050—Person Handling

Module code 050 is a new module for TOPS EBAF. It indicates Person Handling. This module is included in all AMA records where a person class charge is selected. Person class charges include the following:

- Person Paid
- Person Collect
- Person Special Calling
- Person Special Called
- Person Call Back
- Person Call Back Paid
- Person Call Back Special Calling

TOPS Extended BCAMA-EBAF (continued)

AMA Record with Module Code 050 (Phase 2)

```
HEX ID:AA  STRUCTURE CODE:40752C  CALL CODE:192C
SENSOR TYPE:036C  SENSOR ID:0000000C  REC OFFICE TYPE:036C
REC OFFICE ID:0000000C  DATE:80217C  TIMING IND:00000C
STUDY IND:0200000C  SERVICE OBSERVED:0C  ORIG NPA:613C
ORIG NUMBER:2391234C  CONNECT TIME:0427380C
ELAPSED TIME:002955320C  OPERATOR IDS:1010200009999C
ACC OPERATOR WORK TIME:00250C  SERVICE FEATURE:000C
STATION SIGNALING IND:2C  SCREENING CODE:000C
CALLED NUMBER INPUT:1C  CALLING NUMBER SOURCE:1C
MODULE CODE:050C  CHARGEABLE OPER HOLDING TIME:00000C
MODULE CODE:051C  OVERSEAS IND:1C  TERM NPA:00212C
TERM NUMBER:2208978C  COMPLETION IND:001C
RATE IND:1C  OSS CALL COMPLETION CONDITIONS:1111110C
MODULE CODE:000C
```

Record: Module Code 051—Call Completion

Module code 051 is a new module for TOPS EBAF. It indicates Call Completion Service. The module should be included in all AMA records where call completion service is requested and one of the following is true:

- the call is successfully completed (answered)
- a carrier call that does not complete (unanswered)
- a Operating Company call that does not complete (unanswered)

Note: Call Completion Service is requested when a forward number is dialed by the subscriber or input by the operator.

This module code contains some AMA tables that use datafill as follows:

- Table 281 (Rate Indicator)

  Value 4 is recorded when the called number appears in table Service Screening (SERVSCRN) marked as 'TOLLFREE', or when NO AMA is set from table TOPS. It is also set when field CANCNORC in the route list is set to Y.

- Table 282 (Call Completion Service Conditions)—Table ZENITH is checked for valid zenith numbers.

Following is an example AMA record.

AMA Record with Module Code 051 (Phase 2)

```
HEX ID:AA  STRUCTURE CODE:40752C  CALL CODE:192C
SENSOR TYPE:036C  SENSOR ID:0000000C  REC OFFICE TYPE:036C
REC OFFICE ID:0000000C  DATE:80217C  TIMING IND:00000C
STUDY IND:0200000C  SERVICE OBSERVED:0C  ORIG NPA:613C
ORIG NUMBER:2391234C  CONNECT TIME:0427380C
ELAPSED TIME:000005320C  OPERATOR IDS:1010200009999C
ACC OPERATOR WORK TIME:00250C  SERVICE FEATURE:000C
STATION SIGNALING IND:2C  SCREENING CODE:000C
CALLED NUMBER INPUT:1C  CALLING NUMBER SOURCE:1C
MODULE CODE:051C  OVERSEAS IND:1C  TERM NPA:00212C
TERM NUMBER:2208978C  COMPLETION IND:001C
RATE IND:1C  OSS CALL COMPLETION CONDITIONS:1111110C
MODULE CODE:000C
```

Record: Module Code 052—Alternate Billing

Module code 052 is a new module for TOPS EBAF. It indicates Alternate Billing using Line Information Database (LIDB) or Network Services Database (SDB) verification. This module should be included in the AMA record when a requested alternate billing option is either accepted or rejected and the billing number is datafilled in tables CCVINFO and CCVPARMS as using the LIDB or SDB. The presence of this module signifies that alternate billing is requested. The absence of this module signifies that the call is billed to the calling number.

This module is also included when table CCVPARMS is set to MANUAL or office parameters TOPS_MCCS_CCV and TOPS_MCCS_BNS are set to N indicating that no query should be done. When a third number or calling card number is denied because of invalid digits or table restrictions within the DMS (i.e., table HOTLIST), this module is appended regardless of the datafill in tables CCVINFO and CCVPARMS. When a collect number is denied because of invalid digits or table restrictions, this module is not appended. The AMA record does not indicate the alternate billing attempt.

This module is also included when for all calls that are alternately billed to a CCITT format calling card, regardless of the database used to validate the calling card.

Auto Collect is a special case of alternate billing in Phase 2. If the call is not a zenith nor an 800 call, then this module is appended to record calls class charged as Auto Collect. No database query is done and the billing type identification is recorded as collect.

TOPS Extended BCAMA-EBAF (continued)

Keying the following class charges cause this module to be appended:

- Station Collect
- Person Collect
- Auto Collect (in some cases)
- Station Special Calling
- Person Special Calling
- Station Special Called
- Person Special Called
- Person Call Back Special Calling

This module code contains some AMA tables that use datafill as follows:

- Table 291 (Operator Services System Action)—Table HOTLIST is checked for invalid calling cards.
- Table 802 (Sequence Call Counter)—Parameter MCCS_SEQ_CALL_LIM determines the maximum value recorded.

Following is an example AMA record.

AMA Record with Module Code 052 (Phase 2)

```
HEX ID:AA  STRUCTURE CODE:40752C  CALL CODE:192C
SENSOR TYPE:036C  SENSOR ID:0000000C  REC OFFICE TYPE:036C
REC OFFICE ID:0000000C  DATE:80217C  TIMING IND:00000C
STUDY IND:0200000C  SERVICE OBSERVED:0C  ORIG NPA:613C
ORIG NUMBER:2391234C  CONNECT TIME:0427380C
ELAPSED TIME:000005320C  OPERATOR IDS:1010200009999C
ACC OPERATOR WORK TIME:00250C  SERVICE FEATURE:000C
STATION SIGNALING IND:2C  SCREENING CODE:000C
CALLED NUMBER INPUT:1C  CALLING NUMBER SOURCE:1C
MODULE CODE:051C  OVERSEAS IND:1C  TERM NPA:00212C
TERM NUMBER:2208978C  COMPLETION IND:001C
RATE IND:1C  OSS CALL COMPLETION CONDITIONS:1111110C
MODULE CODE:052C  BILLING TYPE ID:1C  FORMAT ID:2C
SIGNIFICANT DIGITS:010C  BILLABLE DIGITS 1:02122203512C
BILLABLE DIGITS 2:FFFFFFFFFF  RAO:301C
CALLING CARD SUBACCOUNT NUMBER:019C
BILLING NUMBER TREATMENT:FF  LIDB RESPONSE:405C
OSS ACTION:1C  MEANS OF INPUT/RESPONSE:113C
SEQUENCE CALL COUNTER:001C    MODULE CODE:000C
```

Record: Module Code 053—IC/INC Call Delivery

Module code 053 is a new module for TOPS EBAF. It indicates Interexchange Carrier (IC)/International Carrier (INC) Call Delivery.

The module should be included if the call is successfully delivered to the IC/INC. This includes both calls that are transferred and calls that are serviced by the Operating Company on behalf of the carrier using TOPS InterLATA Carrier Service (TICS). A call is considered successful if a forward connection is attempted.

This module code contains some AMA tables that use datafill as follows:

- Table 57 (IC/INC Prefix)

  The carrier access code is required and must be datafilled in table TOPEACAR and OCCINFO. This code can be obtained from eight possible sources which include table TOPEATRK, TRKLATA, or DNPIC

- Table 292 (Source of IC/INC Code)

  The carrier access code obtained from table DNPIC, TRKLATA or TOPEACAR is required and must be datafilled in table TOPEACAR and OCCINFO. This code can be obtained from eight possible sources which include table TOPEATRK, TRKLATA, or DNPIC

Following is an example AMA record.

AMA Record with Module Code 053 (Phase 2)

```
HEX ID:AA  STRUCTURE CODE:40752C  CALL CODE:192C
SENSOR TYPE:036C  SENSOR ID:0000000C  REC OFFICE TYPE:036C
REC OFFICE ID:0000000C  DATE:80217C  TIMING IND:00000C
STUDY IND:0200000C  SERVICE OBSERVED:0C  ORIG NPA:613C
ORIG NUMBER:2391234C  CONNECT TIME:0427380C
ELAPSED TIME:000001280C  OPERATOR IDS:1010200009999C
ACC OPERATOR WORK TIME:00250C  SERVICE FEATURE:000C
STATION SIGNALING IND:2C  SCREENING CODE:000C
CALLED NUMBER INPUT:1C  CALLING NUMBER SOURCE:1C
MODULE CODE:051C  OVERSEAS IND:1C  TERM NPA:00212C
TERM NUMBER:2208978C  COMPLETION IND:001C
RATE IND:1C  OSS CALL COMPLETION CONDITIONS:1111110C
MODULE CODE:053C  IC/INC PREFIX:03332C
CC DATE:80217C  CC TIME:0427376C
CARRIER ELAPSED TIME:000001294C
IC/INC CALL EVENT STATUS:010C  TRUNK GROUP NUMBER:10189C
SOURCE OF IC/INC CODE:3C  IC/INC AGREEMENT TABLE:1C
METHOD OF SIGNALING:008C  MODULE CODE:000C
```

TOPS Extended BCAMA-EBAF (continued)

Record: Module Code 054—IC/INC Information

Module code 054 is a new module for TOPS EBAF. It indicates IC/INC Information. The module should be included in the AMA record if an IC/INC call is not successfully delivered to the carrier. Some of the reasons why a call is not delivered are as follows:

- IC/INC lacks a point of presence in the area
- all trunks busy
- encountering a treatment in the TOPS office
- call is canceled prior to outpulsing to the carrier

This module code contains some AMA tables that use datafill as follows:

- Table 57 (IC/INC Prefix)

  The carrier access code is required and must be datafilled in table TOPEACAR and OCCINFO. This code can be obtained from eight possible sources which include table TOPEATRK, TRKLATA, or DNPIC

- Table 292 (Source of IC/INC Code)

  The carrier access code obtained from table DNPIC, TRKLATA or TOPEACAR is required and must be datafilled in table TOPEACAR and OCCINFO. This code can be obtained from eight possible sources which include table TOPEATRK, TRKLATA, or DNPIC.

- Table 293 (IC/INC Checks)

  Table TOPEACAR is checked for carrier SERV status.

Following is an example AMA record.

AMA Record with Module Code 054 (Phase 2)

```
HEX ID:AA  STRUCTURE CODE:50752C  CALL CODE:190C
SENSOR TYPE:036C  SENSOR ID:0000000C  REC OFFICE TYPE:036C
REC OFFICE ID:0000000C  DATE:80217C  TIMING IND:00000C
STUDY IND:0200000C  SERVICE OBSERVED:0C  ORIG NPA:613C
ORIG NUMBER:2391234C  CONNECT TIME:0427380C
ELAPSED TIME:000000000C  OPERATOR IDS:1010200009999C
ACC OPERATOR WORK TIME:00250C  SERVICE FEATURE:000C
STATION SIGNALING IND:2C  SCREENING CODE:000C
CALLED NUMBER INPUT:1C  CALLING NUMBER SOURCE:1C
TNN:0000432C  MODULE CODE:054C  IC/INC PREFIX:03332C
SOURCE OF IC/INC CODE:3C  IC/INC CHECKS:29999C
MODULE CODE:000C
```

Record: Module Code 055—Listing Services

Module code 055 is a new module for TOPS EBAF. It indicates a Listing Services Service. This module is included for any call that receives a Listings Service, whether or not the requested information is provided.

TOPS can only record one of these modules per AMA record. If more than one database access is made on a call, then the last access is recorded. The GEN AMA or SERVICE DA START keys should be used to generate an AMA record for each separate request made.

It is recommended that field ENHAMA in table DABILL be set to N when using DA or Intercept service and billing with TOPS EBAF Phase 1. If ENHAMA is set to Y, then the Service Feature Field in the structure code is set to indicate directory assistance or intercept service. This information is redundant when associated with this module.

This module code contains some AMA tables that use datafill as follows:

- Table 283 (Service ID)
  - — When DASERV is datafilled in table SERVICES, value 001 is recorded.
  - — Table AMASRVID allows the Operating Telephone Company the ability to datafill values 900—998. The table is indexed based upon the call origination type and the service type of the call. The service type must be set to DASERV or INTCSERV. The value in the table overwrites the BellCORE defined values.
- Table 297 (LSDB's BOC ID)

  A new field is added to table SERVICES for tuples DASERV and INTCSERV called LSDBID. This allows the Operating Company to datafill a unique LSDB identifier for each service. Calls that request DA or Intercept service record the LSDB ID from table SERVICES in AMA.
- Table 288 (Listing Status)
  - — The protocol datafilled as CCI in table SERVICES for either DASERV or INTCSERV returns all of this information when the requested information is sent to TOPS.
  - — The protocol datafilled as IBM in table SERVICES for either DASERV or INTCSERV returns a different set of listing status information. As of the release of this feature, the IBM listing status does not map into the information needed to record in AMA. Values corresponding to unknown are recorded until a mapping can be agreed upon with IBM.

Following is an example AMA record.

TOPS Extended BCAMA-EBAF (continued)

AMA Record with Module Code 055 (Phase 2)

```
HEX ID:AA  STRUCTURE CODE:40752C  CALL CODE:194C
SENSOR TYPE:036C  SENSOR ID:0000000C  REC OFFICE TYPE:036C
REC OFFICE ID:0000000C  DATE:80217C  TIMING IND:00000C
STUDY IND:0200000C  SERVICE OBSERVED:0C  ORIG NPA:613C
ORIG NUMBER:2391234C  CONNECT TIME:0427380C
ELAPSED TIME:000000260C  OPERATOR IDS:1010200009999C
ACC OPERATOR WORK TIME:00250C  SERVICE FEATURE:000C
STATION SIGNALING IND:2C  SCREENING CODE:000C
CALLED NUMBER INPUT:1C  CALLING NUMBER SOURCE:1C
MODULE CODE:055C  SERVICE ID:001C
MEANS OF INFORMATION INPUT:1C  MEANS OF LSDB ACCESS:1C
LSDBS BOC ID:13333C  LSDB ACCESSES:FF  LISTING RESPONSE:2C
LISTING STATUS:111111100C  REQUEST COUNTER:001C
MODULE CODE:000C
```

Record: Module Code 056—Busy Line Verification

Module code 056 is a new module for TOPS EBAF. It indicates a Busy Line Verification Service. The module is included in the AMA record if Busy Line Verification is provided with or without operator interrupt. It is included whether or not the service is completely successful.

Following is an example AMA record.

AMA Record with Module Code 056 (Phase 2)

```
HEX ID:AA  STRUCTURE CODE:40752C  CALL CODE:198C
SENSOR TYPE:036C  SENSOR ID:0000000C  REC OFFICE TYPE:036C
REC OFFICE ID:0000000C  DATE:80217C  TIMING IND:00000C
STUDY IND:0200000C  SERVICE OBSERVED:0C  ORIG NPA:613C
ORIG NUMBER:2391234C  CONNECT TIME:0427380C
ELAPSED TIME:000000249C  OPERATOR IDS:1010200009999C
ACC OPERATOR WORK TIME:00250C  SERVICE FEATURE:000C
STATION SIGNALING IND:2C  SCREENING CODE:000C
CALLED NUMBER INPUT:1C  CALLING NUMBER SOURCE:1C
MODULE CODE:056C  NPA VERIFIED:00613C
NUMBER VERIFIED:6211007C MEANS OF INFORMATION PROVISION:1C
BLV/INTERRUPT RESULT:919C
MODULE CODE:000C
```

Record: Module Code 057—General Assistance

Module code 057 is a new module for TOPS EBAF. It indicates a General Assistance Service. The module is included in the record if a network utilization service is provided. It is included whether or not the service is successfully completed. All TOPS Inward calls append this module to their

AMA records. This module also appears in the AMA record for 0- calls with no called number, for calls that report trouble, and for RONI calls.

Calls that received directory assistance service using an LSDB do not append this module. They append the Listing Services Service Module (055).

This module code contains some AMA tables that use datafill as follows:

- Table 283 (Service ID)
  - — When DASERV is datafilled in table SERVICES, value 001 is recorded.
  - — Table AMASRVID allows the Operating Telephone Company the ability to datafill values 900—998. The table is indexed based upon the call origination type and the service type of the call. The service type must be set to DASERV or INTCSERV. The value in the table overwrites the BellCORE defined values.
- Table 297 (Company ID)

  The NBEC code obtained from the RONI trunk group data.

Following is an example AMA record.

AMA Record with Module Code 057 (Phase 2)

```
HEX ID:AA  STRUCTURE CODE:40752C  CALL CODE:196C
SENSOR TYPE:036C  SENSOR ID:0000000C  REC OFFICE TYPE:036C
REC OFFICE ID:0000000C  DATE:80217C  TIMING IND:00000C
STUDY IND:0200000C  SERVICE OBSERVED:0C  ORIG NPA:613C
ORIG NUMBER:2391234C  CONNECT TIME:0427380C
ELAPSED TIME:000000230C  OPERATOR IDS:1010200009999C
ACC OPERATOR WORK TIME:00250C  SERVICE FEATURE:000C
STATION SIGNALING IND:2C  SCREENING CODE:000C
CALLED NUMBER INPUT:1C  CALLING NUMBER SOURCE:1C
MODULE CODE:057C  SERVICE ID:009C
DATABASE QUERIED:999C  MEANS OF INFORMATION INPUT:1C
REQUEST COUNTER:001C  COMPANY ID:FFFFFF
MODULE CODE:000C
```

Record: Module Code 058—Credit Recording

Module code 058 is a new module for TOPS EBAF. It indicates Credit Recording Service. The module is included if TOPS obtains enough information to generate a credit record. This module is appended when the charge adjust key (KP CHG ADJ) is successfully entered and the type of adjustment is STANDARD.

TOPS Extended BCAMA-EBAF (continued)

This module code contains an AMA table that uses datafill as follows:

- Table 91 (Service Difficulty)

  TOPS uses the number entered by the operator via the Charge Adjust key (KP CHG ADJ). The number is found in table Charge Adjust Key (CHGADJKY).

Following is an example AMA record.

AMA Record with Module Code 058 (Phase 2)

```
HEX ID:AA  STRUCTURE CODE:40752C  CALL CODE:189C
SENSOR TYPE:036C  SENSOR ID:0000000C  REC OFFICE TYPE:036C
REC OFFICE ID:0000000C  DATE:80217C  TIMING IND:00000C
STUDY IND:0200000C  SERVICE OBSERVED:0C  ORIG NPA:613C
ORIG NUMBER:2391234C  CONNECT TIME:0427380C
ELAPSED TIME:000000000C  OPERATOR IDS:1010200009999C
ACC OPERATOR WORK TIME:00250C  SERVICE FEATURE:000C
STATION SIGNALING IND:2C  SCREENING CODE:000C
CALLED NUMBER INPUT:1C  CALLING NUMBER SOURCE:1C
MODULE CODE:058C  SERVICE DIFFICULTY DATE:80217C
SERVICE DIFFICULTY TIME:0427380C  OVERSEAS IND:1C
TERM NPA:00212C  TERM NUMBER:2203333C  COMPANY ID:FFFFFF
SERVICE DIFFICULTY:4C  NUMBER OF OCCURRENCES:001C
CHARGE ADJ INDICATOR:2C  AMOUNT OF CREDIT:00050C
MINUTES OF CREDIT:FFFF
MODULE CODE:000C
```

Record: Module Code 059—Exchange Access Service Processing Time

Module code 059 is a new module for TOPS EBAF. It indicates Exchange Access Service Processing Time. The module is appended when the operating company personnel want to separately record the date, time and duration of service processing provided on behalf of an IC/INC subsequent to carrier determination. The time measured includes actual time spent with both automated and human operators. It does not include time spent in queue waiting for a human or automated operator.

This time is recorded for the last carrier associated with the call. If a new carrier is entered with KP IC, the time for the previous carrier is lost, unless GEN AMA is keyed prior to changing the carrier. Keying GEN AMA with the same carrier causes the generated AMA record to contain the time up to the keying of GEN AMA. Timing for the current call is reset and begun again.

A new field is created in table TOPAMAOP to allow operating company personnel to record service processing time. The datafill must be set in order to append this module on carrier calls.

Following is an example AMA record.

AMA Record with Module Code 059 (Phase 2)

```
HEX ID:AA  STRUCTURE CODE:40752C  CALL CODE:192C
SENSOR TYPE:036C  SENSOR ID:0000000C  REC OFFICE TYPE:036C
REC OFFICE ID:0000000C  DATE:80217C  TIMING IND:00000C
STUDY IND:0200000C  SERVICE OBSERVED:0C  ORIG NPA:613C
ORIG NUMBER:2391234C  CONNECT TIME:0427380C
ELAPSED TIME:000005320C  OPERATOR IDS:1010200009999C
ACC OPERATOR WORK TIME:00250C  SERVICE FEATURE:000C
STATION SIGNALING IND:2C  SCREENING CODE:000C
CALLED NUMBER INPUT:1C  CALLING NUMBER SOURCE:1C
MODULE CODE:051C  OVERSEAS IND:1C  TERM NPA:00212C
TERM NUMBER:2208978C  COMPLETION IND:001C
RATE IND:1C  OSS CALL COMPLETION CONDITIONS:1111110C
MODULE CODE:053C  IC/INC PREFIX:03332C
CC DATE:80217C  CC TIME:0427376C
CARRIER ELAPSED TIME:000005394C
IC/INC CALL EVENT STATUS:010C  TRUNK GROUP NUMBER:10189C
SOURCE OF IC/INC CODE:3C  IC/INC AGREEMENT TABLE:1C
METHOD OF SIGNALING:008C
MODULE CODE:059C
DATE:80217C  TIME:0427200C  ELAPSED TIME:00171C
MODULE CODE:000C
```

Record: Module Code 060—Charges

Module code 060 is a new module for TOPS EBAF. It indicates Charges on a call. It should be included in the AMA record for calls that are rated on a realtime basis. AMA records for calls that are not rated on a realtime basis should not contain this module. The following calls are rated on a realtime basis:

- sent paid coin calls
- sent paid hotel calls
- Time and Charge calls

TOPS Extended BCAMA-EBAF (continued)

This module code contains an AMA table that uses datafill as follows:

- Table 36 (Coin Credit Indicator)

  The operator uses a number from table CHGADJKY for coin credit (CNCREDIT).

Following is an example AMA record.

AMA Record with Module Code 060 (Phase 2)

```
HEX ID:AA  STRUCTURE CODE:40752C  CALL CODE:192C
SENSOR TYPE:036C  SENSOR ID:0000000C  REC OFFICE TYPE:036C
REC OFFICE ID:0000000C  DATE:80217C  TIMING IND:00000C
STUDY IND:0200000C  SERVICE OBSERVED:0C  ORIG NPA:613C
ORIG NUMBER:2391234C  CONNECT TIME:0427380C
ELAPSED TIME:000005230C  OPERATOR IDS:1010200009999C
ACC OPERATOR WORK TIME:00250C  SERVICE FEATURE:000C
STATION SIGNALING IND:2C  SCREENING CODE:000C
CALLED NUMBER INPUT:1C  CALLING NUMBER SOURCE:1C
MODULE CODE:051C  OVERSEAS IND:1C  TERM NPA:00212C
TERM NUMBER:2208978C  COMPLETION IND:001C
RATE IND:1C  OSS CALL COMPLETION CONDITIONS:1111110C
MODULE CODE:060C  CHARGE INDICATOR:2C
AMOUNT OF CHARGE:00150C  WALK OR DEPOSIT AMT:00150C
COIN CREDIT IND:0C
MODULE CODE:000C
```

Record: Module Code 061—Bimodality Alternate Billing

Module code 061 is a new module for TOPS EBAF. It indicates Bimodality Alternate Billing. The module should be included in the AMA record if the call is alternately billed and the billing number is validated using the Billing Validation Authority (BVA). The billing number is datafilled in tables CCVINFO and CCVPARMS as BVC.

The presence of this module signifies that alternate billing is requested. The absence of this module signifies that the call is billed to the calling number. Keying the following class charges causes this module to be appended:

- Station Collect
- Person Collect
- Station Special Calling
- Person Special Calling
- Station Special Called

- Person Special Called
- Person Call Back Special Calling

This module code contains an AMA table that uses datafill as follows:

- Table 802 (Sequence Call Counter)

  Office parameter MCCS_SEQ_CALL_LIM limits the number of calling card sequence calls from MCCS. Values range from 0 to 127. The maximum number that can be recorded in this field is 128.

Following is an example AMA record.

AMA Record with Module Code 061 (Phase 2)

```
HEX ID:AA  STRUCTURE CODE:40752C  CALL CODE:192C
SENSOR TYPE:036C  SENSOR ID:0000000C  REC OFFICE TYPE:036C
REC OFFICE ID:0000000C  DATE:80217C  TIMING IND:00000C
STUDY IND:0200000C  SERVICE OBSERVED:0C  ORIG NPA:613C
ORIG NUMBER:2391234C  CONNECT TIME:0427380C
ELAPSED TIME:000005320C  OPERATOR IDS:1010200009999C
ACC OPERATOR WORK TIME:00250C  SERVICE FEATURE:000C
STATION SIGNALING IND:2C  SCREENING CODE:000C
CALLED NUMBER INPUT:1C  CALLING NUMBER SOURCE:1C
MODULE CODE:051C  OVERSEAS IND:1C  TERM NPA:00212C
TERM NUMBER:2208978C  COMPLETION IND:001C
RATE IND:1C  OSS CALL COMPLETION CONDITIONS:1111110C
MODULE CODE:061C  BILLING TYPE ID:4C  RAO:301C
BILLING NUMBER:02122202345C  BILLING VALID FILE:1C
CREDIT CARD FAIL:000C  OSS ACTION:3C
MEANS OF INPUT/RESPONSE:222C  SEQUENCE CALL COUNTER:FFFF
MODULE CODE:000C
```

Record: Module Code 062—Notify/Opr Assist Calling Card w/DDD

Module code 062 is a new module for TOPS EBAF. It conveys whether or not the call completion call is receiving a nonstandard notify.

Following is an example AMA record.

TOPS Extended BCAMA-EBAF (continued)

AMA Record with Module Code 062 (Phase 2)

```
HEX ID:AA  STRUCTURE CODE:40752C  CALL CODE:192C
SENSOR TYPE:036C  SENSOR ID:0000000C  REC OFFICE TYPE:036C
REC OFFICE ID:0000000C  DATE:80217C  TIMING IND:00000C
STUDY IND:0200000C  SERVICE OBSERVED:0C  ORIG NPA:613C
ORIG NUMBER:2391234C  CONNECT TIME:0427380C
ELAPSED TIME:000005320C  OPERATOR IDS:1010200009999C
ACC OPERATOR WORK TIME:00250C  SERVICE FEATURE:000C
STATION SIGNALING IND:2C  SCREENING CODE:000C
CALLED NUMBER INPUT:1C  CALLING NUMBER SOURCE:1C
MODULE CODE:051C  OVERSEAS IND:1C  TERM NPA:00212C
TERM NUMBER:2208978C  COMPLETION IND:001C
RATE IND:2C  OSS CALL COMPLETION CONDITIONS:1111110C
MODULE CODE:061C  BILLING TYPE ID:1C  RAO:301C
BILLING NUMBER:02122202345C  BILLING VALID FILE:1C
CREDIT CARD FAIL:000C  OSS ACTION:1C
MEANS OF INPUT/RESPONSE:223C  SEQUENCE CALL COUNTER:001C
MODULE CODE:062C  RATE IND:FF  OPER NOTIFICATION:2C
MODULE CODE:000C
```

Record: Module Code 066—Intercept Service

Module code 066 is a new module for TOPS EBAF. It indicates Intercept Service. This module is included for any call that receives intercept service.

TOPS can only record one of these modules per AMA record. If more than one database access is made on a call, then the last access is recorded.

This module code contains an AMA table that uses datafill as follows:

- Table 283 (Service ID)
  - — When DASERV is datafilled in table SERVICES, value 001 is recorded.
  - — Table AMASRVID allows the Operating Telephone Company the ability to datafill values 900—998. The table is indexed based upon the call origination type and the service type of the call. The service type must be set to DASERV or INTCSERV. The value in the table overwrites the BellCORE defined values.

Following is an example AMA record.

AMA Record with Module Code 066 (Phase 2)

```
HEX ID:AA  STRUCTURE CODE:40751C  CALL CODE:215C
SENSOR TYPE:036C  SENSOR ID:0000000C  REC OFFICE TYPE:036C
REC OFFICE ID:0000000C  DATE:00428C  TIMING IND:00000C
STUDY IND:0200000C  SERVICE OBSERVED:0C
CONNECT TIME:0427380C  ELAPSED TIME:000005320C
OPERATOR IDS:00099990099999C  ACC OPERATOR WORK TIME:00000C
SOURCE OF REQUEST:FFFFFF  CALLED NUMBER INPUT:1C
MODULE CODE:066C  SERVICE ID:015C  MEANS OF LSDB ACCESS:1C
LISTING RESPONSE:6C  BILLING NUMBER:02122208978C
OVERSEAS IND:1C  TERM NPA:00919C  TERM NUMBER:2391234C
MODULE CODE:000C
```

Record: Module Code 307—Line Number

Module code 307 is a new module for TOPS EBAF. It records the requested number for both DA and Intercept Service. The tuple RECORD_REQUESTED_NUMBER_FOR_DA in table TOPAMAOP must be set to Y for this module to be included. The information recorded is the line number returned from the LSDB for a DA or Intercept query. If the requested number is nonpublished, then this module is not appended.

This module is also recorded on DA or Intercept Service calls where the operator dials a forward number. A forward number can be input using the OGT function or by the CLD function. Forward numbers are input when a call is being transferred to another DA or Intercept center, or for emergency situations. If a forward number is present, the module is appended.

Following is an example AMA record.

TOPS Extended BCAMA-EBAF (continued)

AMA Record with Module Code 307 (Phase 2)

```
HEX ID:AA  STRUCTURE CODE:40752C  CALL CODE:194C
SENSOR TYPE:036C  SENSOR ID:0000000C  REC OFFICE TYPE:036C
REC OFFICE ID:0000000C  DATE:80217C  TIMING IND:00000C
STUDY IND:0200000C  SERVICE OBSERVED:0C  ORIG NPA:613C
ORIG NUMBER:2391234C  CONNECT TIME:0427380C
ELAPSED TIME:000000260C  OPERATOR IDS:1010200009999C
ACC OPERATOR WORK TIME:00250C  SERVICE FEATURE:000C
STATION SIGNALING IND:2C  SCREENING CODE:000C
CALLED NUMBER INPUT:1C  CALLING NUMBER SOURCE:1C
MODULE CODE:055C  SERVICE ID:001C
MEANS OF INFORMATION INPUT:1C  MEANS OF LSDB ACCESS:1C
LSDBS BOC ID:13333C  LSDB ACCESSES:FF  LISTING RESPONSE:2C
LISTING STATUS:111111100C  REQUEST COUNTER:001C
MODULE CODE:307C  LINE NUMBER TYPE:001C  NPA:00919C
LINE NUMBER:9913333C
MODULE CODE:000C
```

Translations table flow

Table flow is not provided.

Limitations and restrictions

The following limitations and restrictions apply to TOPS Extended BCAMA-EBAF:

- AF1726—TOPS Expanded Bellcore AMA Format (EBAF)

  AF1726 introduces new fields for recording billing information in AMA records. In some cases, TOPS cannot discriminate between the values that can be recorded in the data fields.

- UG100983—AMA: SC 625 CC 110 Calling # has NXX0000

  — TOPS—If a default calling number is recorded and a called number does not exist, Study Indicator byte 6 records value 3, signifying no called number, instead of value 6.

  — Non-TOPS (LAMA/CAMA)—If a default calling number is recorded and a called number does not exist, Study Indicator byte 6 records value 4, signifying no calling and no called number, instead of value 6.

- BR22977—Module code 104 for TOPS billing records

  — PRSDOC BR22977 (Module code 104 for TOPS billing records) changes TOPS AMA billing software so module 104 is used in place of module 303. The manner in which module 303 was appended also is used for module 104. Module 303 was appended to all TOPS billing records (distinguished by call codes in the 700—799 range) by setting

tuple RECORD_ORIGINATING_TRK_GRP_NUM in table TOPAMAOP to Y(es). Note that module 104 is only appended to TOPS billing records produced on the originating side.

— For PRSDOC BR22977, the RECORD_ORIGINATING_TRK_GRP_NUM in table TOPAMAOP does not trigger appending module 303 to TOPS produced billing records with non-TOPS call codes. By datafilling the TOPS trunk group CLLI name in table AMATKOPT with the TRKINFO option, module 104 is appended to these billing records.

Interactions

AF1726—TOPS Expanded Bellcore AMA Format (EBAF)

AF1726 is an optional feature package that interacts with all TOPS calls that use the Bellcore AMA format. This feature does not affect TOPS offices using the NT AMA format.

BR22977—Module code 104 for TOPS billing records

BR22977 makes use of module 104 implemented in feature NC0248 (Trunk Group Member Usage).

Activation/deactivation by the end user

TOPS Extended BCAMA-EBAF requires no activation or deactivation by the end user.

Billing

This section gives a brief description of the new structure codes, call type codes and modules used in all three phases of TOPS EBAF. The new structure codes formats are used only in Phase 2. There are only two different codes: 00751 and 00752. Structure code 00751 is used for all calls originating from a corporate entity, not directly from an end office. An example is an Inward call. Structure code 00752 is used for all calls originating directly from an end office.

The new call type codes are only used in Phase 2 as well. The new call type codes reflect the service received on the call instead of the billing class as in Phases 0 and 1. There are seven different services available: Credit Recording, Carrier Identification with no other service processing, Call Completion, Listing Services, General Assistance, Busy Line Verification and Intercept Service. The structure code (originating or terminating) combined with the

TOPS Extended BCAMA-EBAF (continued)

seven types of service produce a total of twelve call type codes The following two call type codes are not supported:

- a terminating call with credit recording
- an originating call with intercept service

The new modules are used in both Phase 1 and Phase 2. The modules are broken into different categories. The first group consist of service modules. There can only be one service module per AMA record. The service modules are:

- Call Completion (051)
- Listing Services (055)
- Busy Line Verification (056)
- General Assistance (057)
- Credit Recording (058)
- Intercept Service (066)

With the exception of the Listing Services module, these only appear in Phase 2. The Listing Services module appears in both Phase 1 and Phase 2.

The second group of modules are billing modules. These are found in both Phase 1 and Phase 2. There is no restriction for the number of these modules per AMA record. The billing modules are:

- Alternate Billing (052)
- Charges (060)
- Bimodality Alternate Billing (061)
- Notify/Opr Assist Calling Card w/DDD (062)

The third group of modules are exchange access modules. These are found in both Phases 1 and 2. The exchange access modules are:

- Interexchange Carrier (IC)/International Carrier (INC) Call Delivery (053)
- IC/INC Information (054)
- Exchange Access Service Processing Time (059)

The fourth group consists of only one module. This group is called the handling group. Handling refers to station or person. The module in this group is the following:

- Person Handling (050)

The absence of this module indicates station handling. This group is found in both Phase 1 and Phase 2. It can accompany any of the modules implemented in this feature.

The final group is a miscellaneous group. It contains two modules:

- Long Duration (022)
- Line Number Module (307)

Module 022 is found in both Phases 1 and 2. It can accompany any of the modules listed above. Module 307 optionally records the requested number for Directory Assistance and Intercept Service in Phase 2. It is always associated with the Listing Services Service Module (055) at this time.

Station Message Detail Recording

TOPS Extended BCAMA-EBAF does not affect Station Message Detail Recording.

Datafilling office parameters

The following table shows the office parameters used by TOPS Extended BCAMA-EBAF. For more information about office parameters, refer to *Office Parameters Reference Manual*. Office parameters in table OFCENG that are changed to reflect the additional words of memory that are required for recording units are as follows:

Office parameters used by TOPS Extended BCAMA-EBAF

Table name	Parameter name	Explanation and action
OFCENG	NUM_OF_BC_AMA_UNITS	One hundred six words of memory are required for each charge unit
	TOPS_NUM_CAMA_RU	Eighty-nine words of memory are required for each recording unit
	TOPS_NUM_RU	One hundred and thirty-two words of memory are required for each TOPS recording unit
	OOC_NUM_RU	One hundred and seventy-five words of memory are required for each OOC recording unit

TOPS Extended BCAMA-EBAF (continued)

Datafill sequence

The following table lists the tables that require datafill to implement TOPS Extended BCAMA-EBAF. The tables are listed in the order in which they are to be datafilled.

Datafill tables required for TOPS Extended BCAMA-EBAF

Table	Purpose of table
TRKGRP (RONI)	RONI trunks provide a method for ONI calls to be recorded by LAMA or CAMA in an office with no CAMA positions in operation.
SERVICES	This table identifies the TOPS services available on the switch and associates data link type, protocol, and data base listing identifiers where appropriate.
BCCODES	This table is used in Bellcore switching offices for Automatic Message Accounting (AMA). Capability is provided to generate AMA records solely because of studies.
AMASRVID	This table maps the call origination type and service type of a call to a number that is used in the Service Identification field.
TOPAMAOP	This table provides the capability to control several TOPS AMA parameters
EBAFTKPH	This table sets the phase of EBAF that generates AMA records for TOPS, Intertoll, RONI, or Access Tandem to Carrier trunks.
AMATKOPT	AMA trunk options

Datafilling table TRKGRP (RONI)

RONI trunks allow ONI calls to be recorded by LAMA or CAMA in an office with no CAMA positions in operation. This feature provides further refinement of trunk group types by adding fields NBECID and SNPA.

The following table shows the datafill specific to TOPS Extended BCAMA-EBAF for table TRKGRP. Only those fields that apply directly to

TOPS Extended BCAMA-EBAF (continued)

TOPS Extended BCAMA-EBAF are shown. For a description of the other fields, refer to the data schema section of this document.

Datafilling table TRKGRP (RONI)

Field	Subfield or refinement	Entry	Explanation and action
NBECID		numeric	Field NBECID is added to associate a 4 digit Non-Bell Exchange Carrier (NBEC) code with calls incoming on RONI trunk groups. The term NBEC typically refers to an independent operating company that has contracted with another operating company to provide its operator services. The NBECID identifies calls handled by the TOPS switch for the NBEC. The correct NBEC code should be datafilled on RONI trunk groups (where applicable) following the BCS upgrade. The default value for this new field is 0000. The field NBECID represents the Non-BOC Exchange Carrier Identification associated with the RONI calls originating on the trunk and applies to phase 2 of EBAF only.
SNPA		numeric	The field SNPA represents the Serving Numbering Plan Area associated with the RONI calls originating on the trunk. Field SNPA is applicable to EBAF phases 1 and 2. An example of RONI trunks with the NBECID represented by values 2541 for RONI3 and 5983 for RONI1 and with the SNPA represented by the value 613 is illustrated in the datafill example. The default value for this new field is the first NPA datafilled in table HNPACONT. In offices that serve more than one NPA, the SNPA field must be modified on some RONI trunk groups, since it automatically sets to the NPA which appears at the top of table HNPACONT. The operating company should verify the SNPA following the upgrade in order to ensure that the true NPA appears in their EBAF records.

Datafill example for table TRKGRP (RONI)

The following example shows sample datafill for table TRKGRP.

TOPS Extended BCAMA-EBAF (continued)

MAP display example for table TRKGRP

```
GRPKEY                                                GRPINFO
-------------------------------------------------------
 RONI3     RONI 0 NPDGP NCRT IC NT EANDM Y OFF 2541 613
 RONI1     RONI 0 NPDGP NCRT IC NT EANDM Y ON  5983 613
```

Datafilling table SERVICES

This table identifies the TOPS services available on the switch and associates data link type, protocol, and data base listing identifiers where appropriate. The following figure indicates that Toll and Assistance (TA) and DA services are provided. The DA service is provided using the CCI protocol for formatting messages that are sent to the DA vendor over a MPC datalink and a listing services identifier of 2138.

Datafill example for table SERVICES

The following example shows sample datafill for table SERVICES.

MAP display example for table SERVICES

```
 INDEX                              SERVDATA
 ---------------------------------------------------------
 1                                    TASERV
 2                       DASERV CCI MPC 2138
```

Datafilling table BCCODES

The call type codes that are datafilled in table BCCODES indicate unanswered calls with these call type codes should generate an AMA record. If the call type code is not datafilled in this table, then no AMA record is produced.

The following table shows the datafill specific to TOPS Extended BCAMA-EBAF for table BCCODES. Only those fields that apply directly to TOPS Extended BCAMA-EBAF are shown. For a description of the other fields, refer to the data schema section of this document.

Datafilling table BCCODES

Field	Subfield or refinement	Entry	Explanation and action
CODES		189-199, 215	New call type codes

Datafill example for table BCCODES

The following figure illustrates that unanswered calls for call type codes 010 (Station Paid, Operator Handled), 014 (Station Collect), 110 (InterLATA WATS, Detail), 189 (Originating Call Provided with Credit Recording Service), 250 (Carrier or Customer Inward Service Record), and 251 (InterLATA 0+, 0- Call Transfer) generate an AMA record.

MAP display example for table BCCODES

```
CALLTYPE                                    CODES
-------------------------------------------------------------
TOPS        (010) (014) (110) (189) (250) (251)$
```

Datafilling table AMASRVID

This table maps the call origination type and service type of a call to a number that is used in the Service Identification field of the General Assistance (057), Listing Services (055), and Intercept Service (066) modules. For example, the following figure illustrates that for call origination type 121 and service type TASERV, the value 900 appears in the Service Identification field of the General Assistance module of the AMA record.

Datafill example for table AMASRVID

The following example shows sample datafill for table AMASRVID.

MAP display example for table AMASRVID

```
COSERV              SERVID
-------------------------------------------------------------
121           TASERV     900
411           DASERV     910
555           TASERV     909
555           DASERV     940
HOM555        DASERV     927
FOR555        DASERV     975
INTC        INTCSERV     996
```

Datafilling table TOPAMAOP

Table TOPAMAOP provides the capability to control several TOPS AMA parameters. The following figure is an example of table TOPAMAOP showing the EBAF phase for the entire office set to phase 2. Parameter EA_SERV_PROCESSING_TIME set to Y indicates that module 059, Exchange Access Service Processing Time, is in the AMA records for carrier calls. Parameter RECORD_REQUESTED_NUMBER_FOR_DA set to Y

TOPS Extended BCAMA-EBAF (continued)

indicates that module 307, Line Number, is in the Phase 2 EBAF AMA records for calls that receive DA service.

To enable appending module 104 to TOPS billing records which contain TOPS call codes, set tuple RECORD_ORIGINATING_TRK_GRP_NUM in table TOPAMAOP to Y(es).

Datafill example for table TOPAMAOP

The following example shows sample datafill for table TOPAMAOP.

MAP display example for table TOPAMAOP

```
AMAOPT                                  OPTINFO
-----------------------------------------------
EBAF_PHASE                               PHASE2
EA_SERV_PROCESSING_TIME                       Y
RECORD_REQUESTED_NUMBER_FOR_DA                Y
RECORD_ORIGINATING_TRK_GRP_NUM                Y
```

Datafilling table EBAFTKPH

Table EBAFTKPH sets the EBAF phase that generates AMA records for TOPS, Intertoll, RONI, or Access Tandem to Carrier trunks. The example datafill indicates trunk groups RONIIC and ATC2W set to EBAF phase 0, trunk groups TOPSIC, TOPS2W, and ATCIC set to EBAF phase 1, and trunk groups ITIC and IT2W set to EBAF phase 2.

Datafill example for table EBAFTKPH

The following example shows sample datafill for table EBAFTKPH.

MAP display example for table EBAFTKPH

```
TCLLI                   PHASE
-------------------------------------------------------
TOPSIC                  PHASE1
TOPS2W                  PHASE1
RONIIC                  PHASE0
ITIC                    PHASE2
ARCIC                   PHASE1
IT2W                    PHASE2
ATC2W                   PHASE0
```

Datafilling table AMATKOPT

Datafill example for table AMATKOPT

The following example shows the addition of a trunk group to table AMATKOPT. TRKINFO is included as a trunk group option.

MAP display example for table AMATKOPT

```
CLLI                OPTIONS
-----------------------------------------
TOPSIC              (TRKINFO) $
```

When calls are routed over a trunk in trunk group TOPSIC and a billing record is produced, then module 104 is appended to that record.

Translation verification tools

TOPS Extended BCAMA-EBAF does not use translation verification tools.

SERVORD

TOPS Extended BCAMA-EBAF does not use SERVORD.

TOPS IDDD 15 Digit Expansion

Ordering codes

Functional group ordering code: OSB00101

Functionality ordering code: not applicable

Release applicability

TOPS04 and up

TOPS IDDD 15 Digit Expansion was introduced in TOPS04.

Prerequisites

To operate, TOPS IDDD 15 Digit Expansion requires the following:

- Functionality BAS Generic, BAS00003
- Table TOPSFTR paramter TOPS_ON_OFF_SWITCH = Y

Description

This functionality is provided by the following features:

Feature number	Feature name
AN1430	TOPS IDDD 15 Digit Dialing
UT55179	HOBIC Device not Capturing Data
PRS UT66923	ACTS for coin phones stop working (bulletin 970004)

This functionality enables TOPS to handle international numbers of up to 15 digits in length (the new maximum stipulated in ITU recommendation E.164).

Also, additional PARS capability, unrelated to IDDD, is provided.

Operation

Currently, international telephone numbers may be up to 12 digits in length. As of Time T (defined in ITU recommendation E.165 to be December 31, 1996, at 23:59 Coordinated Universal Time), international telephone numbers of up to 15 digits in length will be permitted, and equipment which handles international telephone numbers must be capable of handling these expanded international numbers (see ITU recommendations E.164 and E.165).

Following are the changes:

TOPS IDDD 15 Digit Expansion (continued)

Incoming signaling

Up to 15 digits (the DN) can be collected on a TOPS trunks. Whatever KPs, STs, EA prefixes, etc. are also signaled in a stage do not count against the 15 digits.

For sites using MF receivers that are datafilled on TM8 and MTM peripherals, there will need to be an activation process performed prior to using the functionality provided by this feature. These peripherals will need to have their EXEC lineup changed in table TMINV. After the site has upgraded to the TOPS 04 release, the following steps will need to take place to support expanded digit collection:

- Change table TMINV, field EXECS from TM8EX to TM8AT, or from MTMEX to MTMDT.
- Download the new EXECs to the peripherals.
- Update translations to support the expanded numbers.

Outgoing signaling

Up to 15 digits of expanded international numbers can be outpulsed on TOPS trunks. Whatever KPs, STs, EA prefixes, etc. are also signaled in a stage do not count against the 15 digits. The outgoing trunk types that support expanded international dialing are ATC, Intertoll, TOPS, and OP.

For calls routing over MF trunks, only the peripherals in the following table support expanded dialing. If calls are routed to peripherals not in the list, which

TOPS IDDD 15 Digit Expansion (continued)

are attempting to utilize the expanded dialing, it will result in the peripheral reporting a confusion message, and no outpulsing will occur.

IDDD disposition of XPM loads and functions

XPM fanily	XPM load / function	XPM description	IDDD 15 digit collection supported	IDDD 15 digit outpulsing supported
A Series	ADG	Austrian GSM DTC	Y	Y (note 1)
	ADH	Hungarian CAS Trunk DTC	Y	Y (note 1)
	ADT	Austrian CAS Trunk DTC	Y	Y (note 1)
	AD7	Austrian CCS7 DTC	Y	Y (note 1)
	AJG	Austrian POTS LGC	Y	N (note 2)
	ARC	Austrian POTS RCC	Y	Y (note 1)
	UDG	Austrian GSM DTC+	Y	Y (note 1)
	UDT	Austrian CAS Trunk DTC+	Y	Y (note 1)
	UD7	Austrian CCS7 DTC+	Y	Y (note 1)
	UDP	Austrian PRI ISDN DTC+	Y	Y (note 1)
	ULB	Austrian BRI LGC+	Y	N (note 2)
	ULG	Austrian POTS LGC+	Y	N (note 2)

Note 1: These loads have an existing implementation for handling more than 15 digits.

Note 2: These loads do not support PSide PTS trunking.

Note 3: Offstream XPM load.

Note 4: For PSide PTS trunks only.

Note 5: This load requires porting this feature into the frozen stream. The only frozen load in the XPM05 release that supports trunks is the MP/SP DTC (NDT load). This XPM would require porting of the code changes for this feature into the frozen stream for the IDDD functionality to work. If the 15 IDDD outpulsing function is attempted on the NDT load without the ported code, a SWERR is produced and the call is torn down.

Note 6: Note that when the ECL load is used in an LGC+, PTS trunking is not supported.

Note 7: Further development is required to support ISDN.

Note 8: This feature has no impact on CCS7, domestic or international. The international CCS7 variants BTUP, ATUP, and ANSIISUP already support 18 digit outpulsing.

TOPS IDDD 15 Digit Expansion (continued)

IDDD disposition of XPM loads and functions

XPM fanily	XPM load / function	XPM description	IDDD 15 digit collection supported	IDDD 15 digit outpulsing supported
	URB	Austrian BRI RCC+	Y	Y (note 1)
	URC	Austrian POTS RCC+	Y	Y (note 1)
CPM based	CRI	Sonet Remote w/ MX77 (RCC2)	Y	Y
	GPO (note 3)	General Purpose Offshore Peripheral	Y	Y
	KRI	DMS 100G XPM+ ISDN remote (RC02)	Y	N (note 2)
Cellular	EIC	N. A. Cellular XPM+, ICP	Y	Y (note 4)
	ICO	PCM30 ICP	Y	Y (note 4)
	CAP (note 3)	N. A. Cellular CAP	Y	Y (note 4)
Test	DTF	DTC Traffic Load	Y	Y
I Series	EDT	NETAS IDTC+	Y	Y (note 1)
	EID	DMS100i DTC+	Y	Y (note 1)
	EIL	DMS100i LGC+	Y	N (note 2)

Note 1: These loads have an existing implementation for handling more than 15 digits.

Note 2: These loads do not support PSide PTS trunking.

Note 3: Offstream XPM load.

Note 4: For PSide PTS trunks only.

Note 5: This load requires porting this feature into the frozen stream. The only frozen load in the XPM05 release that supports trunks is the MP/SP DTC (NDT load). This XPM would require porting of the code changes for this feature into the frozen stream for the IDDD functionality to work. If the 15 IDDD outpulsing function is attempted on the NDT load without the ported code, a SWERR is produced and the call is torn down.

Note 6: Note that when the ECL load is used in an LGC+, PTS trunking is not supported.

Note 7: Further development is required to support ISDN.

Note 8: This feature has no impact on CCS7, domestic or international. The international CCS7 variants BTUP, ATUP, and ANSIISUP already support 18 digit outpulsing.

TOPS IDDD 15 Digit Expansion (continued)

IDDD disposition of XPM loads and functions

XPM fanily	XPM load / function	XPM description	IDDD 15 digit collection supported	IDDD 15 digit outpulsing supported
	IDT	3 Processor Int'l. DTC (IXPM)	Y	Y (note 1)
	ILG	DMS100i POTS Lines LGC	Y	N (note 2)
	SDT	3 Processor Int'l. DTC For CIS	Y	Y (note 1)
	ESD	NETAS SDTC+	Y	Y (note 1)
TMS	ETM	N. A. ETMS (DS1-XPM+)	Y	N (note 2)
	EUT	Global ETMS (PCM30-XPM+)	Y	N (note 2)
P Series	ODI	DTCOi+ -ISDN ETSI/TS14PRI	Y	Y
	ODT	PDTC+/DTCO+/UP	Y	Y
	OGI	LGCOi+ (LGCO+ With ISDN)	Y	N (note 2)
	OLG	LGCO+	Y	N (note 2)
	ORI	DMS100G XPM+ ISDN remote (PRCC)	Y	Y
SCM	ECR	SMSR+	Y	N (note 2)
	ESI	ESMU+ with ISDN	Y	N (note 2)

Note 1: These loads have an existing implementation for handling more than 15 digits.

Note 2: These loads do not support PSide PTS trunking.

Note 3: Offstream XPM load.

Note 4: For PSide PTS trunks only.

Note 5: This load requires porting this feature into the frozen stream. The only frozen load in the XPM05 release that supports trunks is the MP/SP DTC (NDT load). This XPM would require porting of the code changes for this feature into the frozen stream for the IDDD functionality to work. If the 15 IDDD outpulsing function is attempted on the NDT load without the ported code, a SWERR is produced and the call is torn down.

Note 6: Note that when the ECL load is used in an LGC+, PTS trunking is not supported.

Note 7: Further development is required to support ISDN.

Note 8: This feature has no impact on CCS7, domestic or international. The international CCS7 variants BTUP, ATUP, and ANSIISUP already support 18 digit outpulsing.

TOPS IDDD 15 Digit Expansion (continued)

IDDD disposition of XPM loads and functions

XPM fanily	XPM load / function	XPM description	IDDD 15 digit collection supported	IDDD 15 digit outpulsing supported
SMA	ESC	SMA for AccessNode and TR303 MVI	Y	N (note 2)
MSB	MDP	New Msg. MSB7-DPNSS/UKDMS-100	Y	N (note 2)
NA DMS100 Frozen	NSS	SCM SLC-96 New Messaging	Y	N (note 2)
	SSR	SCM SLC-96 Remote	Y	N (note 2)
	NDT	N. A. Trunk Interface DTC	Y	N (note 5)
Supported NA DMS100	ECL	DTC+/LGC+/LTC+ Consolidated Load	Y	Y (note 6)
	ED7	XPM+ DTC7 Domestic	Y	Y
	ELI	DTCI+/LTCI+ ISDN Service Periph.	Y	Y
	ESR	RCC+	Y	Y
	ESS	SCM+ SLC-96	Y	N (note 2)
	ESU	SMU+	Y	N (note 2)

Note 1: These loads have an existing implementation for handling more than 15 digits.

Note 2: These loads do not support PSide PTS trunking.

Note 3: Offstream XPM load.

Note 4: For PSide PTS trunks only.

Note 5: This load requires porting this feature into the frozen stream. The only frozen load in the XPM05 release that supports trunks is the MP/SP DTC (NDT load). This XPM would require porting of the code changes for this feature into the frozen stream for the IDDD functionality to work. If the 15 IDDD outpulsing function is attempted on the NDT load without the ported code, a SWERR is produced and the call is torn down.

Note 6: Note that when the ECL load is used in an LGC+, PTS trunking is not supported.

Note 7: Further development is required to support ISDN.

Note 8: This feature has no impact on CCS7, domestic or international. The international CCS7 variants BTUP, ATUP, and ANSIISUP already support 18 digit outpulsing.

TOPS IDDD 15 Digit Expansion (continued)

IDDD disposition of XPM loads and functions

XPM fanily	XPM load / function	XPM description	IDDD 15 digit collection supported	IDDD 15 digit outpulsing supported
	NSM	SCM DMS1-R	Y	N (note 2)
ISDN BRI and PRI		n/a	N (note 7)	N (note 7)
CCS7 (note 8)		n/a	n/a	n/a

Note 1: These loads have an existing implementation for handling more than 15 digits.

Note 2: These loads do not support PSide PTS trunking.

Note 3: Offstream XPM load.

Note 4: For PSide PTS trunks only.

Note 5: This load requires porting this feature into the frozen stream. The only frozen load in the XPM05 release that supports trunks is the MP/SP DTC (NDT load). This XPM would require porting of the code changes for this feature into the frozen stream for the IDDD functionality to work. If the 15 IDDD outpulsing function is attempted on the NDT load without the ported code, a SWERR is produced and the call is torn down.

Note 6: Note that when the ECL load is used in an LGC+, PTS trunking is not supported.

Note 7: Further development is required to support ISDN.

Note 8: This feature has no impact on CCS7, domestic or international. The international CCS7 variants BTUP, ATUP, and ANSIISUP already support 18 digit outpulsing.

AABS Protocol

AABS nodes are forced to upgrade to the latest version of the AABS protocol because of changes made by this functionality.

AABS can accommodate expanded international numbers of up to 16 digits in length.

OPP

Up to 15 digits of expanded international numbers can be sent.

TOPS-MP and TOPS-IV Positions

The positions can display up to 15 digits.

PARS

PARS can accommodate expanded international numbers of up to 16 digits in length.

TOPS IDDD 15 Digit Expansion (continued)

For Hotel DA calls, the PARS node is notified whether or not the call is Station Paid, requires collection of a room number, or requires collection of an authorization number.

TOPS devices

Outputs for the following TOPS devices are modified to support expanded international numbers:

- VQ TTY
- AQ TTY
- DUAQ TTY
- RECORD TTY
- NOTIS TTY

The input and output are modified for the following device:

- HADS TTY

Datafill

Due to limitation of VQ TTYs, table TOPSPARM new parameter DEVICE_OUTPUT_CR is provided. Refer to the datafill procedure section for more information.

Hardware

With the introduction of exec lineups MTMDT (for MTMs) and TM8AT (for TM8s) for International 15-digit dialling (IDDD), circuits within some MTMs or TM8s must be moved to other MTMs or TM8s. This is because not all circuits are supported by these new exec lineups. These new exec lineups are for Access Tandem (AT) and TOPS offices only. The following tables show supported and unsupported ciruits.

Circuits supported by new exec lineups MTMDT and TM8AT

Ciruit name	PECs
Receiver Multi-Frequency (RCVRMF)	2X48
Enhanced Digital Test Unit (EDTU)	4X45AA

TOPS IDDD 15 Digit Expansion (continued)

Circuits not supported by new exec lineups MTMDT and TM8AT

Ciruit name	PECs
Office Alarm Unit (OAU)	0X10AA/AB, 2X57AA/AB, any 3X82, 3X83, 3X84, or 3X85
Digital Recorded Announcement Machine (DRAM)	any 1X75/76/77 or 79
Coin Receiver (RCVRCOIN)	3X08AA/AB
Transmission Test Trunk circuits (TTT)	1X90AA/BA, 2X96AA/BA

For upgraded MTMs and TM8s that contain a mix of supported and unsupported circuits, the supported circuits must be moved to other MTMs and TM8s that do not contain unsupported circuits. Then, all MTMs and TM8s with only supported circuits must be upgraded with the appropiate new exec lineups.

Since most offices no longer have the LM, RLM and DCM (series 1 peripherals), and most series 2 peripherals (LGC, LTC, DTC, and so forth) have UTRs, the office should be configured to reduce the number of RCVRMFs required for the office.

To get a list of circuit packs and their location within an MTM or TM8, use the TRKQUERY tool located on Customer Nonres tape (if not already loaded in your switch).

Translations table flow

The TOPS IDDD 15 Digit Expansion has no table flow.

Limitations and restrictions

The following limitations and restrictions apply to TOPS IDDD 15 Digit Expansion:

- Nodes using the AABS protocol must upgrade to the latest version of the protocol before the TOPS switch which they subtend is upgraded to use this functionality.
- The Standard DA Protocol is not extended to support expanded international numbers.
- The ADAS Protocol is not extended to support expanded international numbers.

- AOSS is not extended to support expanded international numbers.
- New EXECs to be downloaded to TM8 and MTM peripherals. Also, it will only outpulse to peripherals listed in the Operation section.

Interactions

TOPS IDDD 15 Digit Expansion has no functionality interactions.

Activation/deactivation by the end user

TOPS IDDD 15 Digit Expansion requires no activation or deactivation by the end user.

Billing

The following new E.164 module codes are created for North American Numbering Plan (NANP) offices only and appended to Bellcore AMA Format (BAF) structures when the international number dialed is greater than 12 digits:

- E.164 Call Completion Service Module (Module Code 151)
- E.164 Credit Recording Service Module (Module Code 158)
- E.164/X.121 Number Module (Module Code 164)

This functionality only affects call codes used in TOPS EBAF Phase 2. Therefore, the E.164 Modules are appended to the following TOPS call codes when required:

- Call Code 110—InterLATA Station Paid
- Call Code 189—Originating with Credit Recording Service
- Call Code 190—Originating with Carrier Identification Processing, but no Service Processing
- Call Code 192—Originating with Call Completion Study
- Call Code 193—Terminating with Call Completion Service
- Call Code 196—Originating with General Assistance Service
- Call Code 251—InterLATA 0+, 0-, Call Transfer

GOS AMA uses its own tables which together hold a DN of up to 20 digits, so it does not need the new module codes. The tables which GOS AMA uses are: 500 & 501 (used in Structure Code 00106), 502 & 503 (used in Module Codes 033 & 035), and 401 & 402 (used in Module Code 052). For more information, see functionality Global TOPS Call Processing, GOS00101.

TOPS IDDD 15 Digit Expansion (continued)

E.164 Call Completion Service Module (Module Code 151)

This is a new module code produced in place of Module Code 051 when the international number dialed is greater than 12 digits. Following is a record description.

Module code 151

Information	Table number	BCD characters
Module Code	88	4
Country Code	165	6
Significant Digits in the Next Field	55	4
Terminating Number	126	16
Completion Indicator	280	4
Rate Indicator	281	2
OSS Call Completion Service Conditions	282	8

Following is an example AMA record.

Call code 192

```
HEX ID:AA  STRUCTURE CODE:40752C  CALL CODE:192C  SENSOR TYPE:036C
SENSOR ID:0123456C  REC OFFICE TYPE:036C  REC OFFICE ID:0123456C
DATE:50304C  TIMING IND:00000C  STUDY IND:0200000C
SERVICE OBSERVED:0C ORIG NPA:619C  ORIG NUMBER:3221212C
CONNECT TIME:1517407C  ELAPSED TIME:000000337C
OPERATOR IDS:1050541009999C  ACC OPERATOR WORK TIME:00270C
SERVICE FEATURE:000C  STATION SIGNALING IND:2C  SCREENING CODE:000C
CALLED NUMBER INPUT:2C CALLING NUMBER SOURCE:1C  MODULE CODE:316C
LOCAL INDICATOR:1C MODULE CODE:311C  ORIG CALL TYPE:001C
MODULE CODE:151C COUNTRY CODE:20033C
SIGNIFICANT DIGITS IN NEXT FIELD:013C DIGITS:001234567890123C
COMPLETION IND:001C  RATE IND:1C
OSS CALL COMPLETION CONDITIONS:1111110C  MODULE CODE:053C
IC/INC PREFIX:01112C  CC DATE:50304C  CC TIME:1517289C
ELAPSED CC:000000455C  IC/INC EVENT STATUS:010C  TRUNK GROUP
NUMBER:10334C SOURCE OF IC/INC CODE:2C  IC/INC AGREEMENT TABLE:1C
METHOD OF SIGNALING:008C  MODULE CODE:310C  KEYING ACTIONS:121111111C
MODULE CODE:059C  SERVICE PROC DATE:50304C  SERVICE PROC TIME:1517281C
SMALL INTERVAL ELAPSED TIME:00125C  MODULE CODE:104C
TRUNK FACILITY ID:103100001C  MODULE CODE:000C
```

E.164 Credit Recording Service Module (Module Code 158)

This is a new module code produced in place of Module Code 058 (Credit Recording Service Module) when the international number dialed is greater than 12 digits. Module Code 058 was produced when the terminating number was 12 digits or less. Following is a record description:

Module code 158

Information	Table number	BCD characters
Module Code	88	4
Service Difficulity Date	6	6
Service Difficulity Time	18	8
Country Code	165	6
Significant Digits in the Next Field	55	4
Digits	126	16
Company Identification	297	6
Service Difficulity	91	2
Number of Occurances	802	4
Charge Adjust Indicator	204	2
Amount of Credit	95	6
Minutes of Credit	108	4

Following is an example AMA record:

TOPS IDDD 15 Digit Expansion (continued)

Call code 158

```
HEX ID:AA  STRUCTURE CODE:40752C  CALL CODE:189C  SENSOR TYPE:036C
SENSOR ID:0123456C  REC OFFICE TYPE:036C  REC OFFICE ID:0123456C
DATE:50304C  TIMING IND:00000C  STUDY IND:0200000C
SERVICE OBSERVED:0C  ORIG NPA:619C  ORIG NUMBER:3226541C
CONNECT TIME:1544308C  ELAPSED TIME:000000000C
OPERATOR IDS:2050541050541C  ACC OPERATOR WORK TIME:00000C
SERVICE FEATURE:000C  STATION SIGNALING IND:2C  SCREENING CODE:000C
CALLED NUMBER INPUT:2C  CALLING NUMBER SOURCE:1C  MODULE CODE:311C
ORIG CALL TYPE:001C  MODULE CODE:158C  SERVICE DIFFICULTY DATE:50304C
SERVICE DIFFICULTY TIME:1544308C  COUNTRY CODE:20033C
SIGNIFICANT DIGITS IN NEXT FIELD:013C  DIGITS:001234567890123C
COMPANY ID:FFFFFF  SERVICE DIFFICULTY:0C  NUMBER OF OCCURRENCES:001C
CHARGE ADJ INDICATOR:2C  AMOUNT OF CREDIT:00003C
MINUTES OF CREDIT:FFFF  MODULE CODE:054C  IC/INC PREFIX:01112C
SOURCE OF IC/INC CODE:2C  IC/INC CHECKS:19999C  MODULE CODE:060C
CHARGE INDICATOR:3C  AMOUNT OF CHARGE:00060C
WALK OR DEPOSIT AMT:00000C  COIN CREDIT IND:FF
MODULE CODE:310C  KEYING ACTIONS:121111111C  MODULE CODE:059C
SERVICE PROC DATE:50304C  SERVICE PROC TIME:1544586C
SMALL INTERVAL ELAPSED TIME:03012C  MODULE CODE:104C
TRUNK FACILITY ID:103100001C  MODULE CODE:000C
```

E.164/X.121 Number Module (Module Code 164)

This module code is appended to Bellcore AMA Format (BAF) structures when the international number dialed is greater than 12 digits for tandem calls in the TOPS environment.

Following is a record description:

Module code 164

Information	Table number	BCD characters
Module Code	88	4
Number Identity	76	2
Country Code or Data Network Identification Code	165	6
Significant Digits in the Next Field	55	4
Digits	126	16

TOPS IDDD 15 Digit Expansion (continued)

When the E.164/X.121 Number Module is appended to a call code, the Overseas Indicator (Table 15), Terminating NPA (Table 16), Terminating Number (Table 17), and the Originating and Terminating Number of the Study Indicator (Table 8) of the call code are affected. The Originating and Terminating Number Study Indicator (Table 8) is populated with “0". The Terminating NPA (Table 16) and Terminating Number (Table 17) are populated with zeros. The E.164/X.121 Number Module is appended to the current call code when the international number dialed is greater than 12 digits.

Following is an example AMA record.

Call code 251

```
HEX ID:AA  STRUCTURE CODE:40625C  CALL CODE:251C  SENSOR TYPE:036C
SENSOR ID:0123456C  REC OFFICE TYPE:036C  REC OFFICE ID:0123456C
DATE:50304C  TIMING IND:00000C  STUDY IND:0200000C  CLD PTY OFF–HK:0C
SERVICE OBSERVED:0C  OPER ACTION:0C SERVICE FEATURE:000C ORIG NPA:619C
ORIG NUMBER:3221111C  OVERSEAS IND:8C  TERM NPA:00000C
TERM NUMBER:0000000C  CONNECT TIME:1523277C  ELAPSED TIME:000000162C
IC/INC PREFIX:01111C  CC DATE:50304C  CC TIME:1523182C
ELAPSED CC:000000261C  IC/INC EVENT STATUS:010C  TRUNK GROUP
NUMBER:10334C  ROUTING INDICATOR:1C  DIALING INDICATOR:1C
ANI INDICATOR:1C  MODULE CODE:164C  NUMBER IDENTITY:2C
COUNTRY CODE OR DNIC:20033C  SIGNIFICANT DIGITS IN NEXT FIELD:013C
DIGITS:001234567890123C  MODULE CODE:000C
```

New AMA tables

The following new AMA tables are created.

Significant Digits in the Next Field (Table 55)

BCD Character	Meaning
1-3	Number of Significant Digits in the Next Field
4	SIGN (hex C)

TOPS IDDD 15 Digit Expansion (continued)

Number Identity (Table 76)

BCD Character	Meaning
1	Number Identity • 1 = Originating (source) • 2 = Terminating (destination)
2	SIGN (hex C)

Digits (Table 126)

BCD Character	Meaning
1-15	Digits

Country Code or Data Network Identification (Table 165)

BCD Character	Meaning
1	Numbering Plan Indicator • 1 = E.164 number with 1-digit country code • 2 = E.164 number with 2-digit country code • 3 = E.164 number with 3-digit country code • 4 = X.121 number (not supported in TOPS)
2-5	Country Code or Data Network Identification Code
6	SIGN (hex C)

Station Message Detail Recording

TOPS IDDD 15 Digit Expansion does not affect Station Message Detail Recording.

Datafilling office parameters

TOPS IDDD 15 Digit Expansion does not affect office parameters.

TOPS IDDD 15 Digit Expansion (continued)

Datafill sequence

The following table lists the tables that require datafill to implement TOPS IDDD 15 Digit Expansion. The tables are listed in the order in which they are to be datafilled.

Datafill tables required for TOPS IDDD 15 Digit Expansion

Table	Purpose of table
TOPSPARM	TOPS parameters

Datafilling table TOPSPARM

The following table shows the datafill specific to TOPS IDDD 15 Digit Expansion for table TOPSPARM. Only those fields that apply directly to TOPS IDDD 15 Digit Expansion are shown. For a description of the other fields, refer to the data schema section of this document.

Datafilling table TOPSPARM

Field PARMNAME	Field PARMVAL	Explanation and action
DEVICE_ OUTPUT_CR	Y or N	Device output carriage return. This parameter determines if an extra LF/CR is put into a character string that is longer than 80 characters. This parameter should be set to N (do not include extra LF/CR) for a Call Store Buffer/TLCS VQ made by CGI. For all other VQ TTYs, set this parameter to Y. The default is N. With functionality TOPS IDDD 15 Digit Expansion (OSB00001), some Hobic devices require more than 80 ASCII characters to display one billing record. The calling and called number fields are increased to handle up to 19 digits. Since the TOPS device buffer is only 80 characters, an extra LF/CR is used to send the record in two lines. However, the VQ TTY in some sites is not a TTY but a Call Store Buffer/TLCS made by CGI and the VQ uses the LF/CR as a flag to indicate end/beginning of a new record. Since the CGI equipment cannot be modified to allow for the extra LF/CR, one billing record looks like two.

Datafill example for table TOPSPARM

The following example shows sample datafill for table TOPSPARM.

TOPS IDDD 15 Digit Expansion (end)

MAP display example for table TOPSPARM

```
PARMNAME                                    PARMVAL
_____________________________________________________

DEVICE_OUTPUT_CR                             Y
```

Translation verification tools

TOPS IDDD 15 Digit Expansion does not use translation verification tools.

SERVORD

TOPS IDDD 15 Digit Expansion does not use SERVORD.

TOPS Increased Multiplexing

Ordering codes

Functional group ordering code: OSB00101

Functionality ordering code: not applicable

Release applicability

BCS35 and later versions

Requirements

To operate, TOPS Increased Multiplexing has the following requirements:

- BAS Generic, BAS00003
- Table TOPSFTR parameter TOPS_ON_OFF_SWITCH = Y

Description

The following features provide this functionality:

Feature number	Feature name
AF3003	Increased Multiplexing of TOPS Operator Data

This package provides the following:

- More Operator Positions for each Terminal Position Controller (TPC).

  This feature increases the number of Operator Positions that can receive data over a TOPS (TMS)-to-TPC data link connection. The TPC is the interface between the TMS and the Operator Positions. Before this feature, the maximum was 4 Operator Positions. With this feature, a TPC can control a maximum of 16 or 20 Operator Positions. This feature does not change the restriction of a total of 96 Operator Positions that subtend a TMS.

- Tailored Permanent Virtual Circuit (PVC) design.

  The TMS accepts a PVC layout for TPCs that control more than 4 Operator Positions. The system can create a PVC layout for the specified TPC. A TPC can control 16 Operator Positions. Some Operator Positions do not require access to a Directory Assistance (DA) database through TMS. For these positions, the PVC layout for that TPC does not require entries to DA PVCs.

  The entry order for PVCs has restrictions. Enter the CC maintenance (MTC) PVC first. Enter the CC call processing PVCs next. Enter the ORDB PVCs last.

TOPS Increased Multiplexing (continued)

- Selective and dynamic update of table TMSPVC.

  Table TMSPVC contains datafill for each TMS on a switch. This feature selectively downloads the PVC layouts that the TMS uses, to each TMS. This feature provides a method to update an INSV TMS with changes in table TMSPVC.

- Improved error messages.

  Error code values index new tables MTCFAIL and MTCTEST. Each value can have a maximum of a 63-character text string entered against the value. The 63-character text string specifies the meaning of the error code. These text strings express meanings of error codes. The Operator Positions send error codes to the CC in Incoming Solicited and Unsolicited Maintenance Messages. Error code values in these messages look up corresponding text strings. The corresponding text strings appear in MP Maintenance and Diagnostic Log outputs.

Additional notes:

- This functionality contains BCS35 TOPS base code changes for tables PVCTYPE, TMSPVC, and TDCDEF. These table changes remain in BCS35 if package TOPS INcreased Multiplexing is present or not. Table PVCTYPE is new. Package TOPS DA Subtending TMS, OSB00101, uses tables TMSPVC and TDCDEF. The TOPS base changes to tables TMSPVC and TDCDEF do not require changes to TOPS DA Subtending TMS datafill. This datafill is for continued operation of 4-position cluster sizes on a TMS.
- The TOPS Increased Multiplexing uses TOPS Open Position Protocol (OPP), OSB00101. TOPS OPP not support Traffic Operator Position System (TOPS) MP position. TOPS OPP only supports TOPS MPX.
- Refer to SEB 93-03-002 to verify that the message rate is not exceeded. A message overload can cause power failure service degradation.
- A TMS can support a combination of MP and MPX positions. A TPC must have one dedicated position type. Table TPCINV, field TPCTYPE, defines the position type.
- The system supports only 4-position, 16-position, and 20-position cluster sizes. For cluster sizes 5-16, datafill for 16 positions. For 17-20 cluster sizes, enter for 20 positions. Use only the required number of positions in the cluster.
- Mixed cluster sizes on a TMS can be present. For this condition, the system stops at partial conversion of a TMS where some TPCs on the TMS are converted. This condition results in 4-position and 16-position and/or

20-position cluster sizes. Use formulas from SEB 93-03-002 to verify this arrangement. Refer to the “Mixed cluster sizes" section for more details.

- Open information access (OIA) is an optional application. The OIA allows the operator to access and retrieve information from an external database. The OIA uses an open protocol, the OIA Generic Protocol, to connect to a database system of a vendor. This database system complies with the protocol specification. The first external database application that uses the OIA Generic Protocol to interact with the OIA application is an operator reference database (ORDB). Computer Generation, Inc (CGI) provides the ORDB. An operator normally uses an ORDB to obtain emergency number information, rate and route information, and city name to numbering plan area (NPA) translations. In this functionality, the CGI appears as an example database in the datafill examples. These databases are also correct. The OIA can use the database of the other vendors instead of the CGI.

Operation

The contents of this section is as follows:

- Background
- Increasing the number of Operator Positions for each TPC
  - — New table PVCTYPE
  - — Enhanced table TMSPVC
  - — Enhanced table TDCDEF
  - — Enhanced table TPCINV
- Tailored PVC layout
  - — PVC layout examples
- Selective update of table TMSPVC
- Dynamic update of table TMSPVC
- TPCs handling increased number of Operator Positions
  - — Facilities savings for each TMS
  - — TPC datafill guidelines
  - — Connection through digital DS1 cross-connect equipment
- Guidelines for a16-Position TPC
  - — Datafill for a 16-position TPC Without TMS ORDB
  - — Datafill for a 16-position TPC with TMS ORDB
  - — Optimum internal TMS connectivity for 16-position TPCs

TOPS Increased Multiplexing (continued)

  - — Guidelines for cutting over to 16-position TPCs for TMS without ORDB
  - — Adding TMS ORDB to TMS with 16-position TPCs
  - — Procedure for connecting each 16-position TPC of an INSV TMS separately to the ORDB database
  - — Cutting over to 16-position TPCs to TMS with ORDB
  - — Steps for converting each TPC
  - — Datafill for TPC-A (1st TPC converted)
  - — Datafill for TPC-B (2nd TPC converted)
  - — Datafill for TPC-C (3rd TPC converted)
  - — Datafill for TPC-D (4th TPC converted)
  - — Datafill for TPC-E (5th TPC converted)
  - — Datafill for TPC-F (6th TPC converted)
- Guidelines for a 20-Position TPC
  - — Datafill for a 20-position TPC without TMS ORDB
  - — Datafill for a 20-position TPC with TMS ORDB
  - — Optimum internal TMS connectivity for 20-position TPCs
  - — Guidelines for cutting over to 20-position TPCs for TMS without ORDB
  - — Guidelines for adding TMS ORDB to TMS with 20-position TPCs
  - — Guidelines for cutting over to 20-position TPCs for TMS with ORDB
  - — Datafill for TPC-A (1st TPC converted)
  - — Datafill for TPC-B (2nd TPC converted)
  - — Datafill for TPC-C (3rd TPC converted)
  - — Datafill for TPC-D (4th TPC converted)
  - — Datafill for TPC-E (5th TPC converted)
- Mixed cluster sizes
- TMS to TPC Configuration
- Table MTCFAIL - Maintenance failure messages
- Table MTCTEST - Maintenance test failure messages

TOPS Increased Multiplexing (continued)

Background

The TMS interfaces to the DMS Central Control network (CC), service nodes, and TPCs. Subtending nodes can include Directory Assistance (DA) and ORDB. The TMS provides connectivity to the TPC and switched access for subtending positions to external databases like DA and ORDB.

Each DS1 link has 24 DS0 channels. The TMS interfaces with the CC through DS30 links. The TMS interfaces with service nodes and TPCs through DS0 channels through a channel bank. Package Global TMS (PCM30), GOS00101, interfaces with service nodes and TPCs through PCM30 channels through a channel bank. Every TPC has one or two data links with datafill. One data link is for redundancy. Each data link requires one DS0 channel. Each Operator Position that subtends a TPC requires a DS0 channel for the voice link. The TMS to TPC configuration appears in the following figure. In this configuration, the maximum number of Operator Positions increases from 4 to 16 or 20.

TMS to TPC configuration

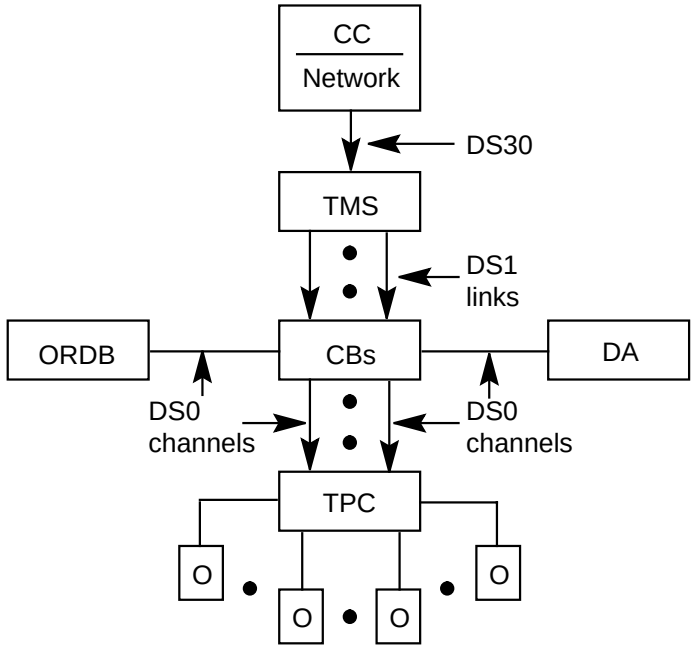

CBs – Channel banks
CC – Central control
DA – Directory assistance
O – Operator Position, max increases from 4 to 16 or 20
ORDB – Operator Reference Database
TMS – TOPS Message Switch
TPC – TOPS Position Controller

TOPS Increased Multiplexing (continued)

Increasing the number of Operator Positions for each TPC

This feature increases the number of operators that can receive data over a TMS to TPC data link connection. Before this feature, the maximum was 4 Operator Positions. This feature allows a TPC to control a maximum of 16 or 20 Operator Positions.

Open Position Protocol (OPP) is the protocol that communicates with the increased number of Operator Positions.

To accomplish this increased number of Operator Positions for each TPC, this feature creates a new table PVCTYPE. This feature enhances tables TMSPVC and TDCDEF.

New table PVCTYPE

This new table relates the PVC design type to each tuple that table TMSPVC defines. An integer value, 0-31, indexes this table. You can enter a maximum of a 32-character identifier against each integer value. These identifiers define the configuration type of a PVC design you enter in table TMSPVC.

Sample datafill for table PVCTYPE appears in the following table.

MAP example for table PVCTYPE

VALUE	SYMBOL
0	TRANS
1	DMS
2	STD
3	CGI4
4	TEG
5	CGI_TEG
6	NOT_USED
7	MPX16
8	CGI16
9	MPX20
10	CGI20

This table is created with default values for entries 0-6. Tuple 0 TRANS, for TRANSition, is for the TMS cut-over methods. Use tuples 1-5 to incorporate the new numbering scheme for table TMSPVC. Tuple 6 assigns NOT_USED when the system encounters a tuple that is not canned during the dump and restore process.

The meaning of these default values appears in the following figure.

Table PVCTYPE default tuples

VALUE	SYMBOL	MEANING
0	TRANS	This type is used as described in the cut-over methods in the appendices.
1	DMS	This type is used for every CC PVC layout defined in TMSPVC.
2	STD	This type is used to describe TPC and DA PVC layouts that are for the CCI configuration.
3	CGI4	This type is used to describe ORDB PVC layouts that are for the CCI configuration.
4	TEG	This type is used to describe TPC and DA PVC layouts that are for the IBM TEG configuration.
5	CGI_TEG	This type is used to describe ORDB PVC layouts that are for the IBM TEG configuration.
6	NOT_USED	This type is used during Dump and Restore when non-canned datafill is restored.

When these entries are in use or a requirement, the entries must not change in this table.

Table PVCTYPE defines part of the table key of TMSPVC. Enter data in table PVCTYPE before you enter data in table TMSPVC. Do not delete a type declared in PVCTYPE if you entered the type in table TMSPVC.

Enhanced table TMSPVC

This enhanced table includes the type of PVC design defined. Each tuple in TMSPVC defines one specified PVC design. This PVC design can be in use for a D-channel handler (DCH) channel. The addition of a configuration type to the TMSPVC table key defines the configuration type of the PVC design. Table PVCTYPE defines the added configuration type. This action allows the system to define PVC designs for TMSs configured for Standard CCI (STD) configurations, IBM MPX 16-position (MPX16) configurations, IBM TEG (TEG) configurations, and additional configurations.

TOPS Increased Multiplexing (continued)

This feature allows you to add, delete and change tuples in TMSPVC. You cannot change tuple entries in TMSPVC, in fields PVCKEY or PVCTAB, if tuples are entered in table TDCDEF. You cannot delete tuple entries in TMSPVC, in fields PVCKEY or PVCTAB, if tuples are entered in table TDCDEF.

The enhancement of the table key changes the datafill of this table. The following are a set of datafill guidelines. Refer to the datafill example that follows the guidelines.

- The table key, field PVCKEY, for each entry, must include a type that table PVCTYPE defines. This type is subfield CONFIG. For example, table key TPC 100 STD has type STD.
- In field PVCTAB, each DA, TPC, CC, and ORDB PVC design defined against a table key entry must contain a type that table PVCTYPE defines. This type is subfield CONFIG. For example, the second tuple has types STD, CGI4, and DMS:

```
TPC 100 STD     (4 DA 10 STD 0)(5 ORDB 100 CGI4 0)
                (1 CC 0 DMS 0)(4 CC 0 DMS 1)
```

- For TPC entries, field VERSION must be a 3-digit number where:
  - — primary data links must number from 100 to 123, and
  - — secondary data links must number from 200 to 223. For example, number 200 is the secondary link to 100, and 201 is the secondary link to 101.

In the datafill example, entry `TPC 100 STD defines the PVC design for the primary data link. Entry TPC 200 STD defines the PVC design for the secondary data link of the first TPC.`

- For DA entries, field VERSION must be a 2-digit number when:
  - — the first digit represents the first, second, third, DA link on the DCH card, and
  - — the second number represents the number of the DCH card. For example, DA 21 STD is the second DA link on DCH card #1.

In the example datafill, entry `DA 10 STD defines the PVC design for the first DA link from DCH card 0. Entry DA 32`

`STD defines the PVC design for the third DA link from DCH card 2.`

- For ORDB entries, field VERSION must be a 3-digit number when:
  - — the first digit represents if the link goes to the database or to another DCH channel. Digit 1 is the link to the database, and 2 is the inter-DCH link. The database is the direct database link. The DCH channel is the inter-DCH link.
  - — the second digit represents the DCH from where the link originates
  - — the third digit represents the DCH to which the link terminates. When the link is a direct database link, this third digit must be the same as the second digit. For example, ORDB 100 CGI4 represents a direct database link from DCH card #0.

In the example datafill, entry `ORDB 213 CG14` defines the PVC design for an inter-DCH link. The PVC design for an inter-DCH link originates on DCH card 1 and terminates on DCH card 3. Entry `ORDB 133 CG14` defines the PVC design for a direct database link from DCH card 3.

MAP example for table TMSPVC

```
PVCKEY                                          PVCTAB
_____________________________________________________

DA 10 STD          (4 TPC 100 STD 0)(4 TPC 101 STD 1)
                   (4 TPC 102 STD 2)(4 TPC 209 STD 9)
TPC 100 STD        (4 DA 10 STD 0)(5 ORDB 100 CGI4 0)
                   (1 CC 0 DMS 0)(4 CC 0 DMS 1)
TPC 100 STD        (4 DA 10 STD 0)(5 ORDB 100 CGI4 0)
                   (1 CC 0 DMS 0)(4 CC 0 DMS 1)
TPC 200 STD        (4 DA 21 STD 0)(5 ORDB 213 CGI4 0)
                   (1 CC 0 DMS 0)(4 CC 0 DMS 1)
DA 10 STD          (4 TPC 100 STD 0)(4 TPC 101 STD 1)
DA 32 STD          (4 TPC 103 STD 9)(4 TPC 102 STD 2)
ORDB 213 CGI4      (5 TPC 200 STD 0)(5 TPC 203 STD 3)
ORDB 133 CGI4      (5 TPC 123 STD 4)(5 TPC 215 STD 6)
```

Table TMSPVC datafill for the standard (STD) configuration that appears before this feature, appears in the following figures. Incorporate the new type field to change the STD configuration datafill.

TOPS Increased Multiplexing (continued)

Table TMSPVC datafill for an IBM TEG configuration that appears before this feature appears in the following figures. Incorporate the new type field to change the IBM TEG configuration datafill.

After the start of the two configurations, the number schemes for the STD and IBM TEG canned datafill were in use. The version numbers do not change now to conform to the new TMSPVC datafill guidelines. Both configurations are updated with the respective type field values.

In table TMSPVC, field PVCTAB contains a list of PVCs. These PVCs are CC, TPC, ORDB, and/or DA. Subfield PURPOSE is the last field of each allotted set of PVCs. Refer to the following figure.

MAP example for table TMSPVC

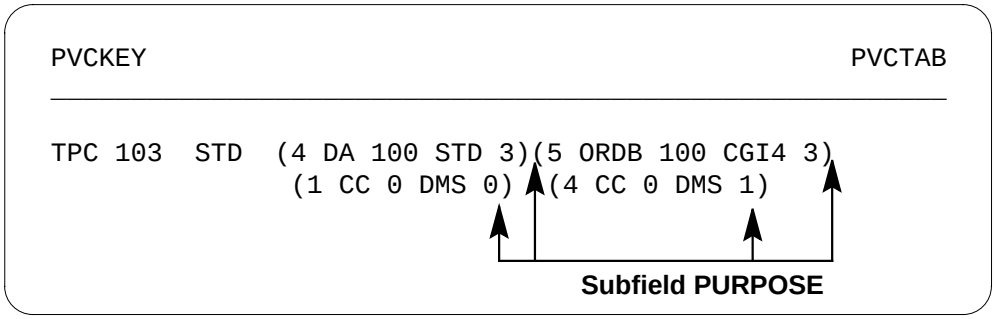

For CC defined PVCs subfield PURPOSE is 0 or 1. The 0 signifies an MTC PVC. The 1 signifies call processing PVCs. For TPC, ORDB, and DA defined PVCs, subfield PURPOSE is a place holder. Subfill purpose aligns the PVCs on the primary and secondary data links of a TPC.

TOPS Increased Multiplexing (continued)

CCI (STD) table TMSPVC datafill before this feature

```
PVCKEY                          PVCTAB
_________________________________________________________
 DA 100     (4 TPC 100 0)(4 TPC 101 1)(4 TPC 102 2)
            (4 TPC 159 9)(4 TPC 165 15)(4 TPC 171 21)
 DA 200     (4 TPC 103 3)(4 TPC 104 4)(4 TPC 105 5)
            (4 TPC 156 6)(4 TPC 162 12)(4 TPC 168 18)
 DA 111     (4 TPC 106 6)(4 TPC 107 7)(4 TPC 108 8)
            (4 TPC 153 3)(4 TPC 166 16)(4 TPC 172 22)
 DA 211     (4 TPC 109 9)(4 TPC 110 10)(4 TPC 111 11)
            (4 TPC 150 0)(4 TPC 163 13)(4 TPC 169 19)
 DA 122     (4 TPC 112 12)(4 TPC 113 13)(4 TPC 114 14)
            (4 TPC 154 4)(4 TPC 160 10)(4 TPC 173 23)
 DA 222     (4 TPC 115 15)(4 TPC 116 16)(4 TPC 117 17)
            (4 TPC 151 1)(4 TPC 157 7)(4 TPC 170 20)
 DA 133     (4 TPC 118 18)(4 TPC 119 19)(4 TPC 120 20)
            (4 TPC 155 5)(4 TPC 161 11)(4 TPC 167 17)
 DA 233     (4 TPC 121 21)(4 TPC 122 22)(4 TPC 123 23)
            (4 TPC 152 2)(4 TPC 158 8)(4 TPC 164 14)
 ORDB 213   (5 TPC 150 0)(5 TPC 153 3)(5 TPC 106 6)
            (5 TPC 107 7)(5 TPC 109 9)(5 TPC 166 16)
 ORDB 231   (5 ORDB 133 0)(5 ORDB 133 3)(5 ORDB 133 6)
            (5 ORDB 133 7)(5 ORDB 133 9)(5 ORDB 133 16)
 ORDB 223   (5 TPC 151 1)(5 TPC 154 4)(5 TPC 160 10)
            (5 TPC 112 12)(5 TPC 113 13)(5 TPC 115 15)
 ORDB 232   (5 ORDB 133 1)(5 ORDB 133 4)(5 ORDB 133 10)
            (5 ORDB 133 12)(5 ORDB 133 13)(5 ORDB 133 15)
 ORDB 210   (5 TPC 108 8)(5 TPC 110 10)(5 TPC 111 11)
            (5 TPC 163 13)(5 TPC 169 19)(5 TPC 172 22)
 ORDB 201   (5 ORDB 100 8)(5 ORDB 100 10)(5 ORDB 100 11)
            (5 ORDB 100 13)(5 ORDB 100 19)(5 ORDB 100 22)
 ORDB 220   (5 TPC 157 7)(5 TPC 114 14)(5 TPC 116 16)
            (5 TPC 117 17)(5 TPC 170 20)(5 TPC 173 23)
 ORDB 202   (5 ORDB 100 7)(5 ORDB 100 14)(5 ORDB 100 16)
            (5 ORDB 100 17)(5 ORDB 100 20)(5 ORDB 100 23)
 ORDB 10    (5 TPC 100 0)(5 TPC 101 1)(5 TPC 102 2)
            (5 TPC 103 3)(5 TPC 104 4)(5 TPC 105 5)
            (5 TPC 156 6)(5 ORDB 202 7)(5 ORDB 201 8)
            (5 TPC 159 9)(5 ORDB 201 10)(5 ORDB 201 11)
            (5 TPC 162 12)(5 ORDB 201 13)(5 ORDB 202 14)
            (5 TPC 165 15)(5 ORDB 202 16)(5 ORDB 202 17)
            (5 TPC 168 18)(5 ORDB 201 19)(5 ORDB 202 20)
            (5 TPC 171 21)(5 ORDB 201 22)(5 ORDB 202 23)
```

TOPS Increased Multiplexing (continued)

CCI (STD) table TMSPVC datafill before this feature (continued)

```
PVCKEY                                PVCTAB
_____________________________________________________________
ORDB 133   (5 ORDB 231 0)(5 ORDB 232 1)(5 TPC 152 2)
           (5 ORDB 231 3)(5 ORDB 232 4)(5 TPC 155 5)
           (5 ORDB 231 6)(5 ORDB 231 7)(5 TPC 158 8)
           (5 ORDB 231 9)(5 ORDB 232 10)(5 TPC 161 11)
           (5 ORDB 232 12)(5 ORDB 232 13)(5 TPC 164 14)
           (5 ORDB 232 15)(5 ORDB 231 16)(5 TPC 167 17)
           (5 TPC 118 18)(5 TPC 119 19)(5 TPC 120 20)
           (5 TPC 121 21)(5 TPC 122 22)(5 TPC 123 23)
TPC 100    (4 DA 100 0)(5 ORDB 100 0)(1 CC 0 0)(4 CC 0 1)
TPC 150    (4 DA 211 0)(5 ORDB 213 0)(1 CC 0 0)(4 CC 0 1)
TPC 101    (4 DA 100 1)(5 ORDB 100 1)(1 CC 0 0)(4 CC 0 1)
TPC 151    (4 DA 222 1)(5 ORDB 223 1)(1 CC 0 0)(4 CC 0 1)
TPC 102    (4 DA 100 2)(5 ORDB 100 2)(1 CC 0 0)(4 CC 0 1)
TPC 152    (4 DA 233 2)(5 ORDB 133 2)(1 CC 0 0)(4 CC 0 1)
TPC 103    (4 DA 200 3)(5 ORDB 100 3)(1 CC 0 0)(4 CC 0 1)
TPC 153    (4 DA 111 3)(5 ORDB 213 3)(1 CC 0 0)(4 CC 0 1)
TPC 104    (4 DA 200 4)(5 ORDB 100 4)(1 CC 0 0)(4 CC 0 1)
TPC 154    (4 DA 122 4)(5 ORDB 223 4)(1 CC 0 0)(4 CC 0 1)
TPC 105    (4 DA 200 5)(5 ORDB 100 5)(1 CC 0 0)(4 CC 0 1)
TPC 155    (4 DA 133 5)(5 ORDB 133 5)(1 CC 0 0)(4 CC 0 1)
TPC 106    (4 DA 111 6)(5 ORDB 213 6)(1 CC 0 0)(4 CC 0 1)
TPC 156    (4 DA 200 6)(5 ORDB 100 6)(1 CC 0 0)(4 CC 0 1)
TPC 107    (4 DA 111 7)(5 ORDB 213 7)(1 CC 0 0)(4 CC 0 1)
TPC 157    (4 DA 222 7)(5 ORDB 220 7)(1 CC 0 0)(4 CC 0 1)
TPC 108    (4 DA 111 8)(5 ORDB 210 8)(1 CC 0 0)(4 CC 0 1)
TPC 158    (4 DA 233 8)(5 ORDB 133 8)(1 CC 0 0)(4 CC 0 1)
TPC 109    (4 DA 211 9)(5 ORDB 213 9)(1 CC 0 0)(4 CC 0 1)
TPC 159    (4 DA 100 9)(5 ORDB 100 9)(1 CC 0 0)(4 CC 0 1)
TPC 110    (4 DA 211 10)(5 ORDB 210 10)(1 CC 0 0)(4 CC 0 1)
TPC 160    (4 DA 122 10)(5 ORDB 223 10)(1 CC 0 0)(4 CC 0 1)
TPC 111    (4 DA 211 11)(5 ORDB 210 11)(1 CC 0 0)(4 CC 0 1)
TPC 161    (4 DA 133 11)(5 ORDB 133 11)(1 CC 0 0)(4 CC 0 1)
TPC 112    (4 DA 122 12)(5 ORDB 223 12)(1 CC 0 0)(4 CC 0 1)
TPC 162    (4 DA 200 12)(5 ORDB 100 12)(1 CC 0 0)(4 CC 0 1)
TPC 113    (4 DA 122 13)(5 ORDB 223 13)(1 CC 0 0)(4 CC 0 1)
TPC 163    (4 DA 211 13)(5 ORDB 210 13)(1 CC 0 0)(4 CC 0 1)
TPC 114    (4 DA 122 14)(5 ORDB 220 14)(1 CC 0 0)(4 CC 0 1)
TPC 164    (4 DA 233 14)(5 ORDB 133 14)(1 CC 0 0)(4 CC 0 1)
TPC 115    (4 DA 222 15)(5 ORDB 223 15)(1 CC 0 0)(4 CC 0 1)
TPC 165    (4 DA 100 15)(5 ORDB 100 15)(1 CC 0 0)(4 CC 0 1)
```

TOPS Increased Multiplexing (continued)

CCI (STD) table TMSPVC datafill before this feature (continued)

PVCKEY	PVCTAB
TPC 116	(4 DA 222 16)(5 ORDB 220 16)(1 CC 0 0)(4 CC 0 1)
TPC 166	(4 DA 111 16)(5 ORDB 213 16)(1 CC 0 0)(4 CC 0 1)
TPC 117	(4 DA 222 17)(5 ORDB 220 17)(1 CC 0 0)(4 CC 0 1)
TPC 167	(4 DA 133 17)(5 ORDB 133 17)(1 CC 0 0)(4 CC 0 1)
TPC 118	(4 DA 133 18)(5 ORDB 133 18)(1 CC 0 0)(4 CC 0 1)
TPC 168	(4 DA 200 18)(5 ORDB 100 18)(1 CC 0 0)(4 CC 0 1)
TPC 119	(4 DA 133 19)(5 ORDB 133 19)(1 CC 0 0)(4 CC 0 1)
TPC 169	(4 DA 211 19)(5 ORDB 210 19)(1 CC 0 0)(4 CC 0 1)
TPC 120	(4 DA 133 20)(5 ORDB 133 20)(1 CC 0 0)(4 CC 0 1)
TPC 170	(4 DA 222 20)(5 ORDB 220 20)(1 CC 0 0)(4 CC 0 1)
TPC 121	(4 DA 233 20)(5 ORDB 133 21)(1 CC 0 0)(4 CC 0 1)
TPC 171	(4 DA 100 21)(5 ORDB 100 21)(1 CC 0 0)(4 CC 0 1)
TPC 122	(4 DA 233 22)(5 ORDB 133 22)(1 CC 0 0)(4 CC 0 1)
TPC 172	(4 DA 111 22)(5 ORDB 210 22)(1 CC 0 0)(4 CC 0 1)
TPC 123	(4 DA 233 23)(5 ORDB 133 23)(1 CC 0 0)(4 CC 0 1)
TPC 173	(4 DA 122 23)(5 ORDB 220 23)(1 CC 0 0)(4 CC 0 1)

TOPS Increased Multiplexing (continued)

CCI (STD) table TMSPVC datafill with this feature

```
 PVCKEY                                  PVCTAB
_____________________________________________________________
DA 100 ST       (4 TPC 100 STD 0)(4 TPC 101 STD 1)
                (4 TPC 102 STD 2)(4 TPC 159 STD 9)
                (4 TPC 165 STD 15)(4 TPC 171 STD 21)
DA 200 STD      (4 TPC 103 STD 3)(4 TPC 104 STD 4)
                (4 TPC 105 STD 5)(4 TPC 156 STD 6)
                (4 TPC 162 STD 12)(4 TPC 168 STD 18)
DA 111 STD      (4 TPC 106 STD 6)(4 TPC 107 STD 7)
                (4 TPC 108 STD 8)(4 TPC 153 STD 3)
                (4 TPC 166 STD 16)(4 TPC 172 STD 22)
DA 211 STD      (4 TPC 109 STD 9)(4 TPC 110 STD 10)
                (4 TPC 111 STD 11)(4 TPC 150 STD 0)
                (4 TPC 163 STD 13)(4 TPC 169 STD 19)
DA 122 STD      (4 TPC 112 STD 12)(4 TPC 113 STD 13)
                (4 TPC 114 STD 14)(4 TPC 154 STD 4)
                (4 TPC 160 STD 10)(4 TPC 173 STD 23)
DA 222 STD      (4 TPC 115 STD 15)(4 TPC 116 STD 16)
                (4 TPC 117 STD 17)(4 TPC 151 STD 1)
                (4 TPC 157 STD 7)(4 TPC 170 STD 20)
DA 133 STD      (4 TPC 118 STD 18)(4 TPC 119 STD 19)
                (4 TPC 120 STD 20)(4 TPC 155 STD 5)
                (4 TPC 161 STD 11)(4 TPC 167 STD 17)
DA 233 STD      (4 TPC 121 STD 21)(4 TPC 122 STD 22)
                (4 TPC 123 STD 23)(4 TPC 152 STD 2)
                (4 TPC 158 STD 8)(4 TPC 164 STD 14)
ORDB 213 CGI4   (5 TPC 150 STD 0)(5 TPC 153 STD 3)
                (5 TPC 106 STD 6)(5 TPC 107 STD 7)
                (5 TPC 109 STD 9)(5 TPC 166 STD 16)
ORDB 231 CGI4   (5 ORDB 133 CGI4 0)(5 ORDB 133 CGI4 3)
                (5 ORDB 133 CGI4 6)(5 ORDB 133 CGI4 7)
                (5 ORDB 133 CGI4 9)(5 ORDB 133 CGI4 16)
ORDB 223 CGI4   (5 TPC 151 STD 1)(5 TPC 154 STD 4)
                (5 TPC 160 STD 10)(5 TPC 112 STD 12)
                (5 TPC 113 STD 13)(5 TPC 115 STD 15)
ORDB 232 CGI4   (5 ORDB 133 CGI4 1)(5 ORDB 133 CGI4 4)
                (5 ORDB 133 CGI4 10)(5 ORDB 133 CGI4 12)
                (5 ORDB 133 CGI4 13)(5 ORDB 133 CGI4 15)
ORDB 210 CG     (5 TPC 108 STD 8)(5 TPC 110 STD 10)
                (5 TPC 111 STD 11)(5 TPC 163 STD 13)
                (5 TPC 169 STD 19)(5 TPC 172 STD 22)
```

TOPS Increased Multiplexing (continued)

CCI (STD) table TMSPVC datafill with this feature (continued)

```
 PVCKEY                                  PVCTAB
_________________________________________________________________
ORDB 201 CGI4   (5 ORDB 100 CGI4 8)(5 ORDB 100 CGI4 10)
                (5 ORDB 100 CGI4 11)(5 ORDB 100 CGI4 13)
                (5 ORDB 100 CGI4 19)(5 ORDB 100 CGI4 22)
ORDB 220 CGI4   (5 TPC 157 STD 7)(5 TPC 114 STD 14)
                (5 TPC 116 STD 16)(5 TPC 117 STD 17)
                (5 TPC 170 STD 20)(5 TPC 173 STD 23)
ORDB 202 CGI4   (5 ORDB 100 CGI4 7)(5 ORDB 100 CGI4 14)
                (5 ORDB 100 CGI4 16)(5 ORDB 100 CGI4 17)
                (5 ORDB 100 CGI4 20)(5 ORDB 100 CGI4 23)
ORDB 100 CGI4   (5 TPC 100 STD 0)(5 TPC 101 STD 1)
                (5 TPC 102 STD 2)(5 TPC 103 STD 3)
                (5 TPC 104 STD 4)(5 TPC 105 STD 5)
                (5 TPC 156 STD 6)(5 ORDB 202 CGI4 7)
                (5 ORDB 201 CGI4 8)(5 TPC 159 STD 9)
                (5 ORDB 201 CGI4 10)(5 ORDB 201 CGI4 11)
                (5 TPC 162 STD 12)(5 ORDB 201 CGI4 13)
                (5 ORDB 202 CGI4 14)(5 TPC 165 STD 15)
                (5 ORDB 202 CGI4 16)(5 ORDB 202 CGI4 17)
                (5 TPC 168 STD 18)(5 ORDB 201 CGI4 19)
                (5 ORDB 202 CGI4 20)(5 TPC 171 STD 21)
                (5 ORDB 201 CGI4 22)(5 ORDB 202 CGI4 23)
ORDB 133 CGI4   (5 ORDB 231 CGI4 0)(5 ORDB 232 CGI4 1)
                (5 TPC 152 STD 2)(5 ORDB 231 CGI4 3)
                (5 ORDB 232 CGI4 4)(5 TPC 155 STD 5)
                (5 ORDB 231 CGI4 6)(5 ORDB 231 CGI4 7)
                (5 TPC 158 STD 8)(5 ORDB 231 CGI4 9)
                (5 ORDB 232 CGI4 10)(5 TPC 161 STD 11)
                (5 ORDB 232 CGI4 12)(5 ORDB 232 CGI4 13)
                (5 TPC 164 STD 14)(5 ORDB 232 CGI4 15)
                (5 ORDB 231 CGI4 16)(5 TPC 167 STD 17)
                (5 TPC 118 STD 18)(5 TPC 119 STD 19)
                (5 TPC 120 STD 20)(5 TPC 121 STD 21)
                (5 TPC 122 STD 22)(5 TPC 123 STD 23)
TPC 100 STD     (4 DA 100 STD 0)(5 ORDB 100 CGI4 0)
                (1 CC 0 DMS 0)(4 CC 0 DMS 1)
 TPC 150 STD    (4 DA 211 STD 0)(5 ORDB 213 CGI4 0)
                (1 CC 0 DMS 0)(4 CC 0 DMS 1)
 TPC 101 STD    (4 DA 100 STD 1)(5 ORDB 100 CGI4 1)
                (1 CC 0 DMS 0)(4 CC 0 DMS 1)
```

TOPS Increased Multiplexing (continued)

CCI (STD) table TMSPVC datafill with this feature (continued)

PVCKEY	PVCTAB
TPC 151 STD	(4 DA 222 STD 1)(5 ORDB 223 CGI4 1) (1 CC 0 DMS 0)(4 CC 0 DMS 1)
TPC 102 STD	(4 DA 100 STD 2)(5 ORDB 100 CGI4 2) (1 CC 0 DMS 0)(4 CC 0 DMS 1)
TPC 152 STD	(4 DA 233 STD 2)(5 ORDB 133 CGI4 2) (1 CC 0 DMS 0)(4 CC 0 DMS 1)
TPC 103 STD	(4 DA 200 STD 3)(5 ORDB 100 CGI4 3) (1 CC 0 DMS 0)(4 CC 0 DMS 1)
TPC 153 STD	(4 DA 111 STD 3)(5 ORDB 213 CGI4 3) (1 CC 0 DMS 0)(4 CC 0 DMS 1)
TPC 104 STD	(4 DA 200 STD 4)(5 ORDB 100 CGI4 4) (1 CC 0 DMS 0)(4 CC 0 DMS 1)
TPC 154 STD	(4 DA 122 STD 4)(5 ORDB 223 CGI4 4) (1 CC 0 DMS 0)(4 CC 0 DMS 1)
TPC 105 STD	(4 DA 200 STD 5)(5 ORDB 100 CGI4 5) (1 CC 0 DMS 0)(4 CC 0 DMS 1)
TPC 155 STD	(4 DA 133 STD 5)(5 ORDB 133 CGI4 5) (1 CC 0 DMS 0)(4 CC 0 DMS 1)
TPC 106 STD	(4 DA 111 STD 6)(5 ORDB 213 CGI4 6) (1 CC 0 DMS 0)(4 CC 0 DMS 1)
TPC 156 STD	(4 DA 200 STD 6)(5 ORDB 100 CGI4 6) (1 CC 0 DMS 0)(4 CC 0 DMS 1)
TPC 107 STD	(4 DA 111 STD 7)(5 ORDB 213 CGI4 7) (1 CC 0 DMS 0)(4 CC 0 DMS 1)
TPC 157 STD	(4 DA 222 STD 7)(5 ORDB 220 CGI4 7) (1 CC 0 DMS 0)(4 CC 0 DMS 1)
TPC 108 STD	(4 DA 111 STD 8)(5 ORDB 210 CGI4 8) (1 CC 0 DMS 0)(4 CC 0 DMS 1)
TPC 158 STD	(4 DA 233 STD 8)(5 ORDB 133 CGI4 8) (1 CC 0 DMS 0)(4 CC 0 DMS 1)
TPC 109 STD	(4 DA 211 STD 9)(5 ORDB 213 CGI4 9) (1 CC 0 DMS 0)(4 CC 0 DMS 1)
TPC 159 STD	(4 DA 100 STD 9)(5 ORDB 100 CGI4 9) (1 CC 0 DMS 0)(4 CC 0 DMS 1)
TPC 110 STD	(4 DA 211 STD 10)(5 ORDB 210 CGI4 10) (1 CC 0 DMS 0)(4 CC 0 DMS 1)
TPC 160 STD	(4 DA 122 STD 10)(5 ORDB 223 CGI4 10) (1 CC 0 DMS 0)(4 CC 0 DMS 1)
TPC 111 STD	(4 DA 211 STD 11)(5 ORDB 210 CGI4 11) (1 CC 0 DMS 0)(4 CC 0 DMS 1)
TPC 161 STD	(4 DA 133 STD 11)(5 ORDB 133 CGI4 11) (1 CC 0 DMS 0)(4 CC 0 DMS 1)

TOPS Increased Multiplexing (continued)

CCI (STD) table TMSPVC datafill with this feature (continued)

TOPS Increased Multiplexing (continued)

PVCKEY	PVCTAB
TPC 112 STD	(4 DA 122 STD 12)(5 ORDB 223 CGI4 12) (1 CC 0 DMS 0)(4 CC 0 DMS 1)
TPC 162 STD	(4 DA 200 STD 12)(5 ORDB 100 CGI4 12) (1 CC 0 DMS 0)(4 CC 0 DMS 1)
TPC 113 STD	(4 DA 122 STD 13)(5 ORDB 223 CGI4 13) (1 CC 0 DMS 0)(4 CC 0 DMS 1)
TPC 163 STD	(4 DA 211 STD 13)(5 ORDB 210 CGI4 13) (1 CC 0 DMS 0)(4 CC 0 DMS 1)
TPC 114 STD	(4 DA 122 STD 14)(5 ORDB 220 CGI4 14) (1 CC 0 DMS 0)(4 CC 0 DMS 1)
TPC 164 STD	(4 DA 233 STD 14)(5 ORDB 133 CGI4 14) (1 CC 0 DMS 0)(4 CC 0 DMS 1)
TPC 115 STD	(4 DA 222 STD 15)(5 ORDB 223 CGI4 15) (1 CC 0 DMS 0)(4 CC 0 DMS 1)
TPC 165 STD	(4 DA 100 STD 15)(5 ORDB 100 CGI4 15 (1 CC 0 DMS 0)(4 CC 0 DMS 1)
TPC 116 STD	(4 DA 222 STD 16)(5 ORDB 220 CGI4 16) (1 CC 0 DMS 0)(4 CC 0 DMS 1)
TPC 166 STD	(4 DA 111 STD 16)(5 ORDB 213 CGI4 16) (1 CC 0 DMS 0)(4 CC 0 DMS 1)
TPC 117 STD	(4 DA 222 STD 17)(5 ORDB 220 CGI4 17) (1 CC 0 DMS 0)(4 CC 0 DMS 1)
TPC 167 STD	(4 DA 133 STD 17)(5 ORDB 133 CGI4 17) (1 CC 0 DMS 0)(4 CC 0 DMS 1)
TPC 118 STD	(4 DA 133 STD 18)(5 ORDB 133 CGI4 18) (1 CC 0 DMS 0)(4 CC 0 DMS 1)
TPC 168 STD	(4 DA 200 STD 18)(5 ORDB 100 CGI4 18) (1 CC 0 DMS 0)(4 CC 0 DMS 1)
TPC 119 STD	(4 DA 133 STD 19)(5 ORDB 133 CGI4 19) (1 CC 0 DMS 0)(4 CC 0 DMS 1)
TPC 169 STD	(4 DA 211 STD 19)(5 ORDB 210 CGI4 19) (1 CC 0 DMS 0)(4 CC 0 DMS 1)
TPC 120 STD	(4 DA 133 STD 20)(5 ORDB 133 CGI4 20) (1 CC 0 DMS 0)(4 CC 0 DMS 1)
TPC 170 STD	(4 DA 222 STD 20)(5 ORDB 220 CGI4 20) (1 CC 0 DMS 0)(4 CC 0 DMS 1)
TPC 121 STD	(4 DA 233 STD 20)(5 ORDB 133 CGI4 21) (1 CC 0 DMS 0)(4 CC 0 DMS 1)
TPC 171 STD	(4 DA 100 STD 21)(5 ORDB 100 CGI4 21) (1 CC 0 DMS 0)(4 CC 0 DMS 1)
TPC 122 STD	(4 DA 233 STD 22)(5 ORDB 133 CGI4 22) (1 CC 0 DMS 0)(4 CC 0 DMS 1)
TPC 172 STD	(4 DA 111 STD 22)(5 ORDB 210 CGI4 22) (1 CC 0 DMS 0)(4 CC 0 DMS 1)
TPC 123 STD	(4 DA 233 STD 23)(5 ORDB 133 CGI4 23) (1 CC 0 DMS 0)(4 CC 0 DMS 1)
TPC 173 STD	(4 DA 122 STD 23)(5 ORDB 220 CGI4 23) (1 CC 0 DMS 0)(4 CC 0 DMS 1)

TOPS Increased Multiplexing (continued)

IBM TEG table TMSPVC datafill before this feature

```
PVCKEY                                          PVCTAB
_____________________________________________________________
DA  10                          (4 TPC 125 0)(4 TPC 126 1)
                                (4 TPC 181 6)(4 TPC 182 7)
DA  11                          (4 TPC 131 6)(4 TPC 132 7)
                                (4 TPC 175 0)(4 TPC 176 1)
DA  12                          (4 TPC 177 2)(4 TPC 178 3)
                              (4 TPC 137 12)(4 TPC 138 13)
DA  13                        (4 TPC 143 18)(4 TPC 144 19)
                                (4 TPC 179 4)(4 TPC 180 5)
DA  20                          (4 TPC 127 2)(4 TPC 128 3)
                              (4 TPC 187 12)(4 TPC 188 13)
DA  21                          (4 TPC 133 8)(4 TPC 134 9)
                              (4 TPC 189 14)(4 TPC 190 15)
DA  22                          (4 TPC 183 8)(4 TPC 184 9)
                              (4 TPC 139 14)(4 TPC 140 15)
DA  23                        (4 TPC 145 20)(4 TPC 146 21)
                              (4 TPC 185 10)(4 TPC 186 11)
DA  30                          (4 TPC 129 4)(4 TPC 130 5)
                              (4 TPC 193 18)(4 TPC 194 19)
DA  31                        (4 TPC 135 10)(4 TPC 136 11)
                              (4 TPC 195 20)(4 TPC 196 21)
DA  32                        (4 TPC 141 16)(4 TPC 142 17)
                              (4 TPC 197 22)(4 TPC 198 23)
DA  33                        (4 TPC 191 16)(4 TPC 192 17)
                              (4 TPC 147 22)(4 TPC 148 23)
ORDB 113          (5 TPC 175 0)(5 TPC 176 1)(5 TPC 131 6)
                 (5 TPC 132 7)(5 TPC 189 14)(5 TPC 190 15)
ORDB 131       (5 ORDB 233 0)(5 ORDB 233 1)(5 ORDB 233 6)
              (5 ORDB 233 7)(5 ORDB 233 14)(5 ORDB 233 15)
ORDB 123          (5 TPC 177 2)(5 TPC 178 3)(5 TPC 183 8)
                 (5 TPC 184 9)(5 TPC 137 12)(5 TPC 138 13)
ORDB 132       (5 ORDB 233 2)(5 ORDB 233 3)(5 ORDB 233 8)
              (5 ORDB 233 9)(5 ORDB 233 12)(5 ORDB 233 13)
ORDB 110         (5 TPC 133 8)(5 TPC 134 9)(5 TPC 135 10)
                (5 TPC 136 11)(5 TPC 195 20)(5 TPC 196 21)
ORDB 101      (5 ORDB 200 8)(5 ORDB 200 9)(5 ORDB 200 10)
             (5 ORDB 200 11)(5 ORDB 200 20)(5 ORDB 200 21)
ORDB 120       (5 TPC 139 14)(5 TPC 140 15)(5 TPC 141 16)
                (5 TPC 142 17)(5 TPC 197 22)(5 TPC 198 23)
ORDB 102    (5 ORDB 200 14)(5 ORDB 200 15)(5 ORDB 200 16)
             (5 ORDB 200 17)(5 ORDB 200 22)(5 ORDB 200 23)
```

TOPS Increased Multiplexing (continued)

IBM TEG table TMSPVC datafill before this feature (continued)

```
PVCKEY                                  PVCTAB
_____________________________________________________________
RDB 200            (5 TPC 125 0)(5 TPC 126 1)(5 TPC 127 2)
                    (5 TPC 128 3)(5 TPC 129 4)(5 TPC 130 5)
                   (5 TPC 181 6)(5 TPC 182 7)(5 ORDB 101 8)
                5 ORDB 101 9)(5 ORDB 101 10)(5 ORDB 101 11)
                (5 TPC 187 12)(5 TPC 188 13)(5 ORDB 102 14)
              (5 ORDB 102 15)(5 ORDB 102 16)(5 ORDB 102 17)
                (5 TPC 193 18)(5 TPC 194 19)(5 ORDB 101 20)
              (5 ORDB 101 21)(5 ORDB 102 22)(5 ORDB 102 23)
ORDB 233         (5 ORDB 131 0)(5 ORDB 131 1)(5 ORDB 132 2)
                   (5 ORDB 132 3)(5 TPC 179 4)(5 TPC 180 5)
                 (5 ORDB 131 6)(5 ORDB 131 7)(5 ORDB 132 8)
                 (5 ORDB 132 9)(5 TPC 185 10)(5 TPC 186 11)
              (5 ORDB 132 12)(5 ORDB 132 13)(5 ORDB 131 14)
                (5 ORDB 131 15)(5 TPC 191 16)(5 TPC 192 17)
                 (5 TPC 143 18)(5 TPC 144 19)(5 TPC 145 20)
                 (5 TPC 146 21)(5 TPC 147 22)(5 TPC 148 23)
TPC 125   (4 DA 10 0) (5 ORDB 200 0) (1 CC 0 0) (4 CC 0 1)
TPC 175   (4 DA 11 0) (5 ORDB 113 0) (1 CC 0 0) (4 CC 0 1)
TPC 126   (4 DA 10 1) (5 ORDB 200 1) (1 CC 0 0) (4 CC 0 1)
TPC 176   (4 DA 11 1) (5 ORDB 113 1) (1 CC 0 0) (4 CC 0 1)
TPC 127   (4 DA 20 2) (5 ORDB 200 2) (1 CC 0 0) (4 CC 0 1)
TPC 177   (4 DA 12 2) (5 ORDB 123 2) (1 CC 0 0) (4 CC 0 1)
TPC 128   (4 DA 20 3) (5 ORDB 200 3) (1 CC 0 0) (4 CC 0 1)
TPC 178   (4 DA 12 3) (5 ORDB 123 3) (1 CC 0 0) (4 CC 0 1)
TPC 129   (4 DA 30 4) (5 ORDB 200 4) (1 CC 0 0) (4 CC 0 1)
TPC 179   (4 DA 13 4) (5 ORDB 233 4) (1 CC 0 0) (4 CC 0 1)
TPC 130   (4 DA 30 5) (5 ORDB 200 5) (1 CC 0 0) (4 CC 0 1)
TPC 180   (4 DA 13 5) (5 ORDB 233 5) (1 CC 0 0) (4 CC 0 1)
TPC 131   (4 DA 11 6) (5 ORDB 113 6) (1 CC 0 0) (4 CC 0 1)
TPC 181   (4 DA 10 6) (5 ORDB 200 6) (1 CC 0 0) (4 CC 0 1)
TPC 132   (4 DA 11 7) (5 ORDB 113 7) (1 CC 0 0) (4 CC 0 1)
TPC 182   (4 DA 10 7) (5 ORDB 200 7) (1 CC 0 0) (4 CC 0 1)
TPC 133   (4 DA 21 8) (5 ORDB 110 8) (1 CC 0 0) (4 CC 0 1)
TPC 183   (4 DA 22 8) (5 ORDB 123 8) (1 CC 0 0) (4 CC 0 1)
TPC 134   (4 DA 21 9) (5 ORDB 110 9) (1 CC 0 0) (4 CC 0 1)
TPC 184   (4 DA 22 9) (5 ORDB 123 9) (1 CC 0 0) (4 CC 0 1)
TPC 135 (4 DA 31 10) (5 ORDB 110 10) (1 CC 0 0) (4 CC 0 1)
TPC 185 (4 DA 23 10) (5 ORDB 233 10) (1 CC 0 0) (4 CC 0 1)
TPC 136 (4 DA 31 11) (5 ORDB 110 11) (1 CC 0 0) (4 CC 0 1)
TPC 186 (4 DA 23 11) (5 ORDB 233 11) (1 CC 0 0) (4 CC 0 1)
```

TOPS Increased Multiplexing (continued)

IBM TEG table TMSPVC datafill before this feature (continued)

```
PVCKEY                                    PVCTAB
_____________________________________________________________
TPC 137 (4 DA 12 12) (5 ORDB 123 12) (1 CC 0 0) (4 CC 0 1)
TPC 187 (4 DA 20 12) (5 ORDB 200 12) (1 CC 0 0) (4 CC 0 1)
TPC 138 (4 DA 12 13) (5 ORDB 123 13) (1 CC 0 0) (4 CC 0 1)
TPC 188 (4 DA 20 13) (5 ORDB 200 13) (1 CC 0 0) (4 CC 0 1)
TPC 139 (4 DA 22 14) (5 ORDB 120 14) (1 CC 0 0) (4 CC 0 1)
TPC 189 (4 DA 21 14) (5 ORDB 113 14) (1 CC 0 0) (4 CC 0 1)
TPC 140 (4 DA 22 15) (5 ORDB 120 15) (1 CC 0 0) (4 CC 0 1)
TPC 190 (4 DA 21 15) (5 ORDB 113 15) (1 CC 0 0) (4 CC 0 1)
TPC 141 (4 DA 32 16) (5 ORDB 120 16) (1 CC 0 0) (4 CC 0 1)
TPC 191 (4 DA 33 16) (5 ORDB 233 16) (1 CC 0 0) (4 CC 0 1)
TPC 142 (4 DA 32 17) (5 ORDB 120 17) (1 CC 0 0) (4 CC 0 1)
TPC 192 (4 DA 33 17) (5 ORDB 233 17) (1 CC 0 0) (4 CC 0 1)
TPC 143 (4 DA 13 18) (5 ORDB 233 18) (1 CC 0 0) (4 CC 0 1)
TPC 193 (4 DA 30 18) (5 ORDB 200 18) (1 CC 0 0) (4 CC 0 1)
TPC 144 (4 DA 13 19) (5 ORDB 233 19) (1 CC 0 0) (4 CC 0 1)
TPC 194 (4 DA 30 19) (5 ORDB 200 19) (1 CC 0 0) (4 CC 0 1)
TPC 145 (4 DA 23 20) (5 ORDB 233 20) (1 CC 0 0) (4 CC 0 1)
TPC 195 (4 DA 31 20) (5 ORDB 110 20) (1 CC 0 0) (4 CC 0 1)
TPC 146 (4 DA 23 21) (5 ORDB 233 21) (1 CC 0 0) (4 CC 0 1)
TPC 196 (4 DA 31 21) (5 ORDB 110 21) (1 CC 0 0) (4 CC 0 1)
TPC 147 (4 DA 33 22) (5 ORDB 233 22) (1 CC 0 0) (4 CC 0 1)
TPC 197 (4 DA 32 22) (5 ORDB 120 22) (1 CC 0 0) (4 CC 0 1)
TPC 148 (4 DA 33 23) (5 ORDB 233 23) (1 CC 0 0) (4 CC 0 1)
TPC 198 (4 DA 32 23) (5 ORDB 120 23) (1 CC 0 0) (4 CC 0 1)
```

TOPS Increased Multiplexing (continued)

IBM TEG table TMSPVC datafill with this feature

```
 PVCKEY                                  PVCTAB
_____________________________________________________________
DA 10 TEG              (4 TPC 125 TEG 0)(4 TPC 126 TEG 1)
                       (4 TPC 181 TEG 6)(4 TPC 182 TEG 7)
DA 11 TEG              (4 TPC 131 TEG 6)(4 TPC 132 TEG 7)
                       (4 TPC 175 TEG 0)(4 TPC 176 TEG 1)
DA 12 TEG              (4 TPC 177 TEG 2)(4 TPC 178 TEG 3)
                     (4 TPC 137 TEG 12)(4 TPC 138 TEG 13)
DA 13 TEG            (4 TPC 143 TEG 18)(4 TPC 144 TEG 19)
                       (4 TPC 179 TEG 4)(4 TPC 180 TEG 5)
DA 20 TEG              (4 TPC 127 TEG 2)(4 TPC 128 TEG 3)
                     (4 TPC 187 TEG 12)(4 TPC 188 TEG 13)
DA 21 TEG              (4 TPC 133 TEG 8)(4 TPC 134 TEG 9)
                     (4 TPC 189 TEG 14)(4 TPC 190 TEG 15)
DA 22 TEG              (4 TPC 183 TEG 8)(4 TPC 184 TEG 9)
                     (4 TPC 139 TEG 14)(4 TPC 140 TEG 15)
DA 23 TEG            (4 TPC 145 TEG 20)(4 TPC 146 TEG 21)
                     (4 TPC 185 TEG 10)(4 TPC 186 TEG 11)
DA 30 TEG              (4 TPC 129 TEG 4)(4 TPC 130 TEG 5)
                     (4 TPC 193 TEG 18)(4 TPC 194 TEG 19)
DA 31 TEG            (4 TPC 135 TEG 10)(4 TPC 136 TEG 11)
                     (4 TPC 195 TEG 20)(4 TPC 196 TEG 21)
DA 32 TEG            (4 TPC 141 TEG 16)(4 TPC 142 TEG 17)
                     (4 TPC 197 TEG 22)(4 TPC 198 TEG 23)
DA 33 TEG            (4 TPC 191 TEG 16)(4 TPC 192 TEG 17)
                     (4 TPC 147 TEG 22)(4 TPC 148 TEG 23)
ORDB 113 CGI_TEG       (5 TPC 175 TEG 0)(5 TPC 176 TEG 1)
                       (5 TPC 131 TEG 6)(5 TPC 132 TEG 7)
                     (5 TPC 189 TEG 14)(5 TPC 190 TEG 15)
ORDB 131 CGI_TEG                  (5 ORDB 233 CGI_TEG 0)
            (5 ORDB 233 CGI_TEG 1)(5 ORDB 233 CGI_TEG 6)
           (5 ORDB 233 CGI_TEG 7)(5 ORDB 233 CGI_TEG 14)
                                (5 ORDB 233 CGI_TEG 15)
ORDB 123 CGI_TEG      (5 TPC 177 TEG 2)(5 TPC 178 TEG 3)
                      (5 TPC 183 TEG 8)(5 TPC 184 TEG 9)
                    (5 TPC 137 TEG 12)(5 TPC 138 TEG 13)
ORDB 132 CGI_TEG                 (5 ORDB 233 CGI_TEG 2)
            (5 ORDB 233 CGI_TEG 3)(5 ORDB 233 CGI_TEG 8)
           (5 ORDB 233 CGI_TEG 9)(5 ORDB 233 CGI_TEG 12)
                                (5 ORDB 233 CGI_TEG 13)
```

TOPS Increased Multiplexing (continued)

IBM TEG table TMSPVC datafill with this feature (continued)

```
PVCKEY                                  PVCTAB
_____________________________________________________________________
ORDB 110 CGI_TEG       (5 TPC 133 TEG 8)(5 TPC 134 TEG 9)
                     (5 TPC 135 TEG 10)(5 TPC 136 TEG 11)
                     (5 TPC 195 TEG 20)(5 TPC 196 TEG 21)
ORDB 101 CGI_TEG                  (5 ORDB 200 CGI_TEG 8)
            (5 ORDB 200 CGI_TEG 9)(5 ORDB 200 CGI_TEG 10)
           (5 ORDB 200 CGI_TEG 11)(5 ORDB 200 CGI_TEG 20)
                                  (5 ORDB 200 CGI_TEG 21)
ORDB 120 CGI_TEG     (5 TPC 139 TEG 14)(5 TPC 140 TEG 15)
                    (5 TPC 141 TEG 16)(5 TPC 142 TEG 17)
                    (5 TPC 197 TEG 22)(5 TPC 198 TEG 23)
ORDB 102 CGI_TEG                (5 ORDB 200 CGI_TEG 14)
           (5 ORDB 200 CGI_TEG 15)(5 ORDB 200 CGI_TEG 16)
          (5 ORDB 200 CGI_TEG 17)(5 ORDB 200 CGI_TEG 22)
                                  (5 ORDB 200 CGI_TEG 23)
ORDB 200 CGI_TEG      (5 TPC 125 TEG 0)(5 TPC 126 TEG 1)
      (5 TPC 127 TEG 2)(5 TPC 128 TEG 3)(5 TPC 129 TEG 4)
      (5 TPC 130 TEG 5)(5 TPC 181 TEG 6)(5 TPC 182 TEG 7)
             (5 ORDB 101 CGI_TEG 8)(5 ORDB 101 CGI_TEG 9)
            (5 ORDB 101 CGI_TEG 10)(5 ORDB 101 CGI_TEG 11)
                      (5 TPC 187 TEG 12)(5 TPC 188 TEG 13)
            (5 ORDB 102 CGI_TEG 14)(5 ORDB 102 CGI_TEG 15)
            (5 ORDB 102 CGI_TEG 16)(5 ORDB 102 CGI_TEG 17)
                      (5 TPC 193 TEG 18)(5 TPC 194 TEG 19)
            (5 ORDB 101 CGI_TEG 20)(5 ORDB 101 CGI_TEG 21)
            (5 ORDB 102 CGI_TEG 22)(5 ORDB 102 CGI_TEG 23)
ORDB 233 CGI_TEG                    (5 ORDB 131 CGI_TEG 0)
              (5 ORDB 131 CGI_TEG 1)(5 ORDB 132 CGI_TEG 2)
  (5 ORDB 132 CGI_TEG 3)(5 TPC 179 TEG 4)(5 TPC 180 TEG 5)
              (5 ORDB 131 CGI_TEG 6)(5 ORDB 131 CGI_TEG 7)
              (5 ORDB 132 CGI_TEG 8)(5 ORDB 132 CGI_TEG 9)
                      (5 TPC 185 TEG 10)(5 TPC 186 TEG 11)
            (5 ORDB 132 CGI_TEG 12)(5 ORDB 132 CGI_TEG 13)
            (5 ORDB 131 CGI_TEG 14)(5 ORDB 131 CGI_TEG 15)
    (5 TPC 191 TEG 16)(5 TPC 192 TEG 17)(5 TPC 143 TEG 18)
    (5 TPC 144 TEG 19)(5 TPC 145 TEG 20)(5 TPC 146 TEG 21)
                     (5 TPC 147 TEG 22)(5 TPC 148 TEG 23)
TPC 125 TEG          (4 DA 10 TEG 0)(5 ORDB 200 CGI_TEG 0)
TPC 175 TEG         (4 DA 11 TEG 0)(5 ORDB 113 CGI_TEG 0)
                               (1 CC 0 DMS 0)(4 CC 0 DMS 1)
```

TOPS Increased Multiplexing (continued)

IBM TEG table TMSPVC datafill with this feature (continued)

```
PVCKEY                                PVCTAB
_____________________________________________________________
TPC 126 TEG          (4 DA 10 TEG 1)(5 ORDB 200 CGI_TEG 1)
                               (1 CC 0 DMS 0)(4 CC 0 DMS 1)
TPC 176 TEG          (4 DA 11 TEG 1)(5 ORDB 113 CGI_TEG 1)
                               (1 CC 0 DMS 0)(4 CC 0 DMS 1)
TPC 127 TEG          (4 DA 20 TEG 2)(5 ORDB 200 CGI_TEG 2)
                               (1 CC 0 DMS 0)(4 CC 0 DMS 1)
TPC 177 TEG          (4 DA 12 TEG 2)(5 ORDB 123 CGI_TEG 2)
                               (1 CC 0 DMS 0)(4 CC 0 DMS 1)
TPC 128 TEG          (4 DA 20 TEG 3)(5 ORDB 200 CGI_TEG 3)
                               (1 CC 0 DMS 0)(4 CC 0 DMS 1)
TPC 178 TEG          (4 DA 12 TEG 3)(5 ORDB 123 CGI_TEG 3)
                               (1 CC 0 DMS 0)(4 CC 0 DMS 1)
TPC 129 TEG          (4 DA 30 TEG 4)(5 ORDB 200 CGI_TEG 4)
                               (1 CC 0 DMS 0)(4 CC 0 DMS 1)
TPC 179 TEG          (4 DA 13 TEG 4)(5 ORDB 233 CGI_TEG 4)
                               (1 CC 0 DMS 0)(4 CC 0 DMS 1)
TPC 130 TEG           (4 DA 30 TEG 5)(5 ORDB 200 CGI_TEG 5)
                               (1 CC 0 DMS 0)(4 CC 0 DMS 1)
TPC 180 TEG          (4 DA 13 TEG 5)(5 ORDB 233 CGI_TEG 5)
                               (1 CC 0 DMS 0)(4 CC 0 DMS 1)
TPC 131 TEG           (4 DA 11 TEG 6)(5 ORDB 113 CGI_TEG 6)
                               (1 CC 0 DMS 0)(4 CC 0 DMS 1)
TPC 181 TEG           (4 DA 10 TEG 6)(5 ORDB 200 CGI_TEG 6)
                               (1 CC 0 DMS 0)(4 CC 0 DMS 1)
TPC 132 TEG           (4 DA 11 TEG 7)(5 ORDB 113 CGI_TEG 7)
                               (1 CC 0 DMS 0)(4 CC 0 DMS 1)
TPC 182 TEG           (4 DA 10 TEG 7)(5 ORDB 200 CGI_TEG 7)
                               (1 CC 0 DMS 0)(4 CC 0 DMS 1)
TPC 133 TEG           (4 DA 21 TEG 8)(5 ORDB 110 CGI_TEG 8)
                               (1 CC 0 DMS 0)(4 CC 0 DMS 1)
TPC 183 TEG          (4 DA 22 TEG 8)(5 ORDB 123 CGI_TEG 8)
                               (1 CC 0 DMS 0)(4 CC 0 DMS 1)
TPC 134 TEG           (4 DA 21 TEG 9)(5 ORDB 110 CGI_TEG 9)
                               (1 CC 0 DMS 0)(4 CC 0 DMS 1)
TPC 184 TEG          (4 DA 22 TEG 9)(5 ORDB 123 CGI_TEG 9)
                               (1 CC 0 DMS 0)(4 CC 0 DMS 1)
TPC 135 TEG         (4 DA 31 TEG 10)(5 ORDB 110 CGI_TEG 10)
                               (1 CC 0 DMS 0)(4 CC 0 DMS 1)
TPC 185 TEG         (4 DA 23 TEG 10)(5 ORDB 233 CGI_TEG 10)
                               (1 CC 0 DMS 0)(4 CC 0 DMS 1)
```

TOPS Increased Multiplexing (continued)

IBM TEG table TMSPVC datafill with this feature (continued)

```
PVCKEY                                PVCTAB
_____________________________________________________________
TPC 136 TEG       (4 DA 31 TEG 11)(5 ORDB 110 CGI_TEG 11)
                            (1 CC 0 DMS 0)(4 CC 0 DMS 1)
TPC 186 TEG        (4 DA 23 TEG 11)(5 ORDB 233 CGI_TEG 11)
                             (1 CC 0 DMS 0)(4 CC 0 DMS 1)
TPC 137 TEG       (4 DA 12 TEG 12)(5 ORDB 123 CGI_TEG 12)
                             (1 CC 0 DMS 0)(4 CC 0 DMS 1)
TPC 187 TEG        (4 DA 20 TEG 12)(5 ORDB 200 CGI_TEG 12)
                             (1 CC 0 DMS 0)(4 CC 0 DMS 1)
TPC 138 TEG        (4 DA 12 TEG 13)(5 ORDB 123 CGI_TEG 13)
                             (1 CC 0 DMS 0)(4 CC 0 DMS 1)
TPC 188 TEG        (4 DA 20 TEG 13)(5 ORDB 200 CGI_TEG 13)
                            (1 CC 0 DMS 0)(4 CC 0 DMS 1)
TPC 139 TEG        (4 DA 22 TEG 14)(5 ORDB 120 CGI_TEG 14)
                             (1 CC 0 DMS 0)(4 CC 0 DMS 1)
TPC 189 TEG        (4 DA 21 TEG 14)(5 ORDB 113 CGI_TEG 14)
                             (1 CC 0 DMS 0)(4 CC 0 DMS 1)
TPC 140 TEG        (4 DA 22 TEG 15)(5 ORDB 120 CGI_TEG 15)
                            (1 CC 0 DMS 0)(4 CC 0 DMS 1)
TPC 190 TEG        (4 DA 21 TEG 15)(5 ORDB 113 CGI_TEG 15)
                             (1 CC 0 DMS 0)(4 CC 0 DMS 1)
TPC 141 TEG        (4 DA 32 TEG 16)(5 ORDB 120 CGI_TEG 16)
                             (1 CC 0 DMS 0)(4 CC 0 DMS 1)
TPC 191 TEG        (4 DA 33 TEG 16)(5 ORDB 233 CGI_TEG 16)
                             (1 CC 0 DMS 0)(4 CC 0 DMS 1)
TPC 142 TEG        (4 DA 32 TEG 17)(5 ORDB 120 CGI_TEG 17)
                             (1 CC 0 DMS 0)(4 CC 0 DMS 1)
TPC 192 TEG        (4 DA 33 TEG 17)(5 ORDB 233 CGI_TEG 17)
                             (1 CC 0 DMS 0)(4 CC 0 DMS 1)
TPC 143 TEG        (4 DA 13 TEG 18)(5 ORDB 233 CGI_TEG 18)
                             (1 CC 0 DMS 0)(4 CC 0 DMS 1)
TPC 193 TEG        (4 DA 30 TEG 18)(5 ORDB 200 CGI_TEG 18)
                             (1 CC 0 DMS 0)(4 CC 0 DMS 1)
TPC 144 TEG        (4 DA 13 TEG 19)(5 ORDB 233 CGI_TEG 19)
                             (1 CC 0 DMS 0)(4 CC 0 DMS 1)
TPC 194 TEG        (4 DA 30 TEG 19)(5 ORDB 200 CGI_TEG 19)
                             (1 CC 0 DMS 0)(4 CC 0 DMS 1)
TPC 145 TEG        (4 DA 23 TEG 20)(5 ORDB 233 CGI_TEG 20)
                             (1 CC 0 DMS 0)(4 CC 0 DMS 1)
TPC 195 TEG        (4 DA 31 TEG 20)(5 ORDB 110 CGI_TEG 20)
                             (1 CC 0 DMS 0)(4 CC 0 DMS 1)
```

TOPS Increased Multiplexing (continued)

IBM TEG table TMSPVC datafill with this feature (continued)

```
PVCKEY                                PVCTAB
_____________________________________________________
TPC 146 TEG        (4 DA 23 TEG 21)(5 ORDB 233 CGI_TEG 21)
                             (1 CC 0 DMS 0)(4 CC 0 DMS 1)
TPC 196 TEG        (4 DA 31 TEG 21)(5 ORDB 110 CGI_TEG 21)
                             (1 CC 0 DMS 0)(4 CC 0 DMS 1)
TPC 147 TEG        (4 DA 33 TEG 22)(5 ORDB 233 CGI_TEG 22)
                             (1 CC 0 DMS 0)(4 CC 0 DMS 1)
TPC 197 TEG        (4 DA 32 TEG 22)(5 ORDB 120 CGI_TEG 22)
                             (1 CC 0 DMS 0)(4 CC 0 DMS 1)
TPC 148 TEG        (4 DA 33 TEG 23)(5 ORDB 233 CGI_TEG 23)
                             (1 CC 0 DMS 0)(4 CC 0 DMS 1)
TPC 198 TEG        (4 DA 32 TEG 23)(5 ORDB 120 CGI_TEG 23)
                             (1 CC 0 DMS 0)(4 CC 0 DMS 1)
```

Enhanced table TDCDEF

The enhanced table includes the type of PVC design defined. Each DCH channel that TDCDEF defines has a PVC configuration entered in the channel. This PVC configuration includes the type of PVC configuration.

- The entries of this table are restricted. You cannot enter a PVC configuration from TMSPVC more than one time in TDCDEF for the same TMS.
- The TDCDEF table datafill for the STD configuration before this feature appears in the following figures. The STD configuration datafill changes to include the addition of the PVC type.
- The TDCDEF table datafill for the IBM TEG configuration before this feature appears in the following figures. The IBM TEG configuration datafill changes to include the addition of the PVC type.

TOPS Increased Multiplexing (continued)

CCI (STD) TDCDEF datafill before this feature

```
ISGNO                                                          TDCTAB
_____________________________________________________________________
0
 (1 X25DCEL TPC 100)(2 X25DCEL TPC 103)(3 X25DCEL ORDB 100)
         (4 NILPROT)(5 X25DCEL TPC 101)(6 X25DCEL TPC 104)
         (7 X25DCEL ORDB 201)(8 NILPROT)(9 X25DCEL TPC 102)
       (10 X25DCEL TPC 105)(11 X25DCEL ORDB 202)(12 NILPROT)
        (13 X25DCEL TPC 159)(14 X25DCEL TPC 156)(15 NILPROT)
        (16 NILPROT)(17 X25DCEL TPC 165)(18 X25DCEL TPC 162)
               (19 NILPROT)(20 NILPROT)(21 X25DCEL TPC 171)
               (22 X25DCEL TPC 168)(23 NILPROT)(24 NILPROT)
         (25 X25DCEL DA 100)(26 X25DCEL DA 200)(27 NILPROT)
           (28 NILPROT)(29 NILPROT)(30 NILPROT)(31 NILPROT)
1
         (1 X25DCEL TPC 106)(2 X25DCEL TPC 109)(3 NILPROT)
         (4 NILPROT)(5 X25DCEL TPC 107)(6 X25DCEL TPC 110)
         (7 X25DTEL ORDB 210)(8 NILPROT)(9 X25DCEL TPC 108)
       (10 X25DCEL TPC 111)(11 X25DTEL ORDB 213)(12 NILPROT)
       (13 X25DCEL TPC 153)(14 X25DCEL TPC 150)(15 NILPROT)
        (16 NILPROT)(17 X25DCEL TPC 166)(18 X25DCEL TPC 163)
               (19 NILPROT)(20 NILPROT)(21 X25DCEL TPC 172)
               (22 X25DCEL TPC 169)(23 NILPROT)(24 NILPROT)
         (25 X25DCEL DA 111)(26 X25DCEL DA 211)(27 NILPROT)
          (28 NILPROT)(29 NILPROT)(30 NILPROT)(31 NILPROT)
2
         (1 X25DCEL TPC 112)(2 X25DCEL TPC 115)(3 NILPROT)
         (4 NILPROT)(5 X25DCEL TPC 113)(6 X25DCEL TPC 116)
        (7 X25DTEL ORDB 223)(8 NILPROT)(9 X25DCEL TPC 114)
       (10 X25DCEL TPC 117)(11 X25DTEL ORDB 220)(12 NILPROT)
        (13 X25DCEL TPC 154)(14 X25DCEL TPC 151)(15 NILPROT)
        (16 NILPROT)(17 X25DCEL TPC 160)(18 X25DCEL TPC 157)
               (19 NILPROT)(20 NILPROT)(21 X25DCEL TPC 173)
               (22 X25DCEL TPC 170)(23 NILPROT)(24 NILPROT)
        (25 X25DCEL DA 122)(26 X25DCEL DA 222)(27 NILPROT)
          (28 NILPROT)(29 NILPROT)(30 NILPROT)(31 NILPROT)
```

TOPS Increased Multiplexing (continued)

CCI (STD) TDCDEF datafill before this feature (continued)

```
ISGNO                                                    TDCTAB
_____________________________________________________________
3
 (1 X25DCEL TPC 118)(2 X25DCEL TPC 121)(3 X25DCEL ORDB 133)
         (4 NILPROT)(5 X25DCEL TPC 119)(6 X25DCEL TPC 122)
         (7 X25DCEL ORDB 232)(8 NILPROT)(9 X25DCEL TPC 120)
      (10 X25DCEL TPC 123)(11 X25DCEL ORDB 231)(12 NILPROT)
      (13 X25DCEL TPC 155)(14 X25DCEL TPC 152)(15 NILPROT)
       (16 NILPROT)(17 X25DCEL TPC 161)(18 X25DCEL TPC 158)
              (19 NILPROT)(20 NILPROT)(21 X25DCEL TPC 167)
              (22 X25DCEL TPC 164)(23 NILPROT)(24 NILPROT)
         (25 X25DCEL DA 133)(26 X25DCEL DA 233)(27 NILPROT)
           (28 NILPROT)(29 NILPROT)(30 NILPROT)(31 NILPROT)
```

TOPS Increased Multiplexing (continued)

CCI (STD) TDCDEF datafill with this feature

```
  ISGNO                                                        TDCTAB
_____________________________________________________________________
0
           (1 X25DCEL TPC 100 STD)(2 X25DCEL TPC 103 STD)
                     (3 X25DCEL ORDB 100 CGI4)(4 NILPROT)
           (5 X25DCEL TPC 101 STD)(6 X25DCEL TPC 104 STD)
                     (7 X25DCEL ORDB 201 CGI4)(8 NILPROT)
          (9 X25DCEL TPC 102 STD)(10 X25DCEL TPC 105 STD)
                   (11 X25DCEL ORDB 202 CGI4)(12 NILPROT)
         (13 X25DCEL TPC 159 STD)(14 X25DCEL TPC 156 STD)
         (15 NILPROT)(16 NILPROT)(17 X25DCEL TPC 165 STD)
         (18 X25DCEL TPC 162 STD)(19 NILPROT)(20 NILPROT)
         (21 X25DCEL TPC 171 STD)(22 X25DCEL TPC 168 STD)
          (23 NILPROT)(24 NILPROT)(25 X25DCEL DA 100 STD)
          (26 X25DCEL DA 200 STD)(27 NILPROT)(28 NILPROT)
                     (29 NILPROT)(30 NILPROT)(31 NILPROT)
1
           (1 X25DCEL TPC 106 STD)(2 X25DCEL TPC 109 STD)
            (3 NILPROT)(4 NILPROT)(5 X25DCEL TPC 107 STD)
         (6 X25DCEL TPC 110 STD)(7 X25DTEL ORDB 210 CGI4)
                      (8 NILPROT)(9 X25DCEL TPC 108 STD)
       (10 X25DCEL TPC 111 STD)(11 X25DTEL ORDB 213 CGI4)
                     (12 NILPROT)(13 X25DCEL TPC 153 STD)
         (14 X25DCEL TPC 150 STD)(15 NILPROT)(16 NILPROT)
         (17 X25DCEL TPC 166 STD)(18 X25DCEL TPC 163 STD)
         (19 NILPROT)(20 NILPROT)(21 X25DCEL TPC 172 STD)
         (22 X25DCEL TPC 169 STD)(23 NILPROT)(24 NILPROT)
           (25 X25DCEL DA 111 STD)(26 X25DCEL DA 211 STD)
          (27 NILPROT)(28 NILPROT)(29 NILPROT)(30 NILPROT)
                                               (31 NILPROT)
2
           (1 X25DCEL TPC 112 STD)(2 X25DCEL TPC 115 STD)
            (3 NILPROT)(4 NILPROT)(5 X25DCEL TPC 113 STD)
         (6 X25DCEL TPC 116 STD)(7 X25DTEL ORDB 223 CGI4)
                       (8 NILPROT)(9 X25DCEL TPC 114 STD)
       (10 X25DCEL TPC 117 STD)(11 X25DTEL ORDB 220 CGI4)
                    (12 NILPROT)(13 X25DCEL TPC 154 STD)
         (14 X25DCEL TPC 151 STD)(15 NILPROT)(16 NILPROT)
         (17 X25DCEL TPC 160 STD)(18 X25DCEL TPC 157 STD)
         (19 NILPROT)(20 NILPROT)(21 X25DCEL TPC 173 STD)
         (22 X25DCEL TPC 170 STD)(23 NILPROT)(24 NILPROT)
           (25 X25DCEL DA 122 STD)(26 X25DCEL DA 222 STD)
          (27 NILPROT)(28 NILPROT)(29 NILPROT)(30 NILPROT)
                                               (31 NILPROT)
```

TOPS Increased Multiplexing (continued)

CCI (STD) TDCDEF datafill with this feature (continued)

```
  ISGNO                                                    TDCTAB
_____________________________________________________________________
3
            (1 X25DCEL TPC 118 STD)(2 X25DCEL TPC 121 STD)
                      (3 X25DCEL ORDB 133 CGI4)(4 NILPROT)
            (5 X25DCEL TPC 119 STD)(6 X25DCEL TPC 122 STD)
                      (7 X25DCEL ORDB 232 CGI4)(8 NILPROT)
           (9 X25DCEL TPC 120 STD)(10 X25DCEL TPC 123 STD)
                    (11 X25DCEL ORDB 231 CGI4)(12 NILPROT)
          (13 X25DCEL TPC 155 STD)(14 X25DCEL TPC 152 STD)
          (15 NILPROT)(16 NILPROT)(17 X25DCEL TPC 161 STD)
          (18 X25DCEL TPC 158 STD)(19 NILPROT)(20 NILPROT)
          (21 X25DCEL TPC 167 STD)(22 X25DCEL TPC 164 STD)
           (23 NILPROT)(24 NILPROT)(25 X25DCEL DA 133 STD)
           (26 X25DCEL DA 233 STD)(27 NILPROT)(28 NILPROT)
                      (29 NILPROT)(30 NILPROT)(31 NILPROT)
```

TOPS Increased Multiplexing (continued)

IBM TEG TDCDEF datafill before this feature

```
ISGNO                                                          TDCTAB
_____________________________________________________________________
0
                    (1 X25DCEL TPC 125)(2 X25DCEL TPC 127)
          (3 X25DCEL ORDB 200)(4 NILPROT)(5 X25DCEL TPC 126)
          (6 X25DCEL TPC 128)(7 X25DCEL ORDB 101)(8 NILPROT)
                  (9 X25DCEL TPC 181)(10 X25DCEL TPC 187)
      (11 X25DCEL ORDB 102)(12 NILPROT)(13 X25DCEL TPC 182)
        (14 X25DCEL TPC 188)(15 X25DCEL TPC 129)(16 NILPROT)
    (17 X25DCEL DA 10)(18 X25DCEL DA 20)(19 X25DCEL TPC 130)
    (20 NILPROT)(21 NILPROT)(22 NILPROT)(23 X25DCEL TPC 193)
    (24 NILPROT)(25 NILPROT)(26 NILPROT)(27 X25DCEL TPC 194)
      (28 NILPROT)(29 NILPROT)(30 NILPROT)(31 X25DCEL DA 30)
1
                     (1 X25DCEL TPC 131)(2 X25DCEL TPC 133)
                  (3 NILPROT)(4 NILPROT)(5 X25DCEL TPC 132)
           (6 X25DCEL TPC 134)(7 X25DTEL ORDB 110)(8 NILPROT)
                     (9 X25DCEL TPC 175)(10 X25DCEL TPC 189
       (11 X25DTEL ORDB 113)(12 NILPROT)(13 X25DCEL TPC 176)
        (14 X25DCEL TPC 190)(15 X25DCEL TPC 135)(16 NILPROT)
    (17 X25DCEL DA 11)(18 X25DCEL DA 21)(19 X25DCEL TPC 136)
    (20 NILPROT)(21 NILPROT)(22 NILPROT)(23 X25DCEL TPC 195)
    (24 NILPROT)(25 NILPROT)(26 NILPROT)(27 X25DCEL TPC 196)
      (28 NILPROT)(29 NILPROT)(30 NILPROT)(31 X25DCEL DA 31)
2
       (1 X25DCEL TPC 137)(2 X25DCEL TPC 139)(3 NILPROT)
       (4 NILPROT)(5 X25DCEL TPC 138)(6 X25DCEL TPC 140)
        (7 X25DTEL ORDB 123)(8 NILPROT)(9 X25DCEL TPC 177)
       (10 X25DCEL TPC 183)(11 X25DTEL ORDB 120)(12 NILPROT)
                   (13 X25DCEL TPC 178)(14 X25DCEL TPC 184)
         (15 X25DCEL TPC 141)(16 NILPROT)(17 X25DCEL DA 12)
          (18 X25DCEL DA 22)(19 X25DCEL TPC 142)(20 NILPROT)
    (21 NILPROT)(22 NILPROT)(23 X25DCEL TPC 197)(24 NILPROT)
    (25 NILPROT)(26 NILPROT)(27 X25DCEL TPC 198)(28 NILPROT)
                  (29 NILPROT)(30 NILPROT)(31 X25DCEL DA 32)
```

TOPS Increased Multiplexing (continued)

IBM TEG TDCDEF datafill before this feature (continued)

```
ISGNO                                                    TDCTAB
_____________________________________________________________
3
                    (1 X25DCEL TPC 143)(2 X25DCEL TPC 145)
          (3 X25DCEL ORDB 233)(4 NILPROT)(5 X25DCEL TPC 144)
          (6 X25DCEL TPC 146)(7 X25DCEL ORDB 132)(8 NILPROT)
                   (9 X25DCEL TPC 179)(10 X25DCEL TPC 185)
       (11 X25DCEL ORDB 131)(12 NILPROT)(13 X25DCEL TPC 180)
        (14 X25DCEL TPC 186)(15 X25DCEL TPC 147)(16 NILPROT)
   (17 X25DCEL DA 13)(18 X25DCEL DA 23)(19 X25DCEL TPC 148)
   (20 NILPROT)(21 NILPROT)(22 NILPROT)(23 X25DCEL TPC 191)
   (24 NILPROT)(25 NILPROT)(26 NILPROT)(27 X25DCEL TPC 192)
        (28 NILPROT)(29 NILPROT)(30 NILPROT)(31 X25DCEL 33)
```

TOPS Increased Multiplexing (continued)

IBM TEG TDCDEF datafill with this feature

```
 ISGNO                                                    TDCTAB
_____________________________________________________________________
0
                (1 X25DCEL TPC 125)(2 X25DCEL TPC 127 TEG)
                   (3 X25DCEL ORDB 200 CGI_TEG)(4 NILPROT)
            (5 X25DCEL TPC 126 TEG)(6 X25DCEL TPC 128 TEG)
                   (7 X25DCEL ORDB 101 CGI_TEG)(8 NILPROT)
           (9 X25DCEL TPC 181 TEG)(10 X25DCEL TPC 187 TEG)
                 (11 X25DCEL ORDB 102 CGI_TEG)(12 NILPROT)
           (13 X25DCEL TPC 182 TEG)(14 X25DCEL TPC 188 TEG)
                      (15 X25DCEL TPC 129 TEG)(16 NILPROT)
              (17 X25DCEL DA 10 TEG)(18 X25DCEL DA 20 TEG)
           (19 X25DCEL TPC 130 TEG)(20 NILPROT)(21 NILPROT)
            (22 NILPROT)(23 X25DCEL TPC 193 TEG)(24 NILPROT)
            (25 NILPROT)(26 NILPROT)(27 X25DCEL TPC 194 TEG)
 (28 NILPROT)(29 NILPROT)(30 NILPROT)(31 X25DCEL DA 30 TEG)
1
              (1 X25DCEL TPC 131 TEG)(2 X25DCEL TPC 133 TEG)
               (3 NILPROT)(4 NILPROT)(5 X25DCEL TPC 132 TEG)
        (6 X25DCEL TPC 134 TEG)(7 X25DTEL ORDB 110 CGI_TEG)
(8 NILPROT)(9 X25DCEL TPC 175 TEG)(10 X25DCEL TPC 189 TEG)
                    (11 X25DTEL ORDB 113 CGI_TEG)(12 NILPROT)
           (13 X25DCEL TPC 176 TEG)(14 X25DCEL TPC 190 TEG)
 (15 X25DCEL TPC 135 TEG)(16 NILPROT)(17 X25DCEL DA 11 TEG)
(18 X25DCEL DA 21 TEG)(19 X25DCEL TPC 136 TEG)(20 NILPROT)
(21 NILPROT)(22 NILPROT)(23 X25DCEL TPC 195 TEG)(24NILPROT)
           (25 NILPROT)(26 NILPROT)(27 X25DCEL TPC 196 TEG)
 (28 NILPROT)(29 NILPROT)(30 NILPROT)(31 X25DCEL DA 31 TEG)
```

TOPS Increased Multiplexing (continued)

IBM TEG TDCDEF datafill with this feature (continued)

```
 ISGNO                                                    TDCTAB
_____________________________________________________________________
2
           (1 X25DCEL TPC 137 TEG)(2 X25DCEL TPC 139 TEG)
            (3 NILPROT)(4 NILPROT)(5 X25DCEL TPC 138 TEG)
       (6 X25DCEL TPC 140 TEG)(7 X25DTEL ORDB 123 CGI_TEG)
                        (8 NILPROT)(9 X25DCEL TPC 177 TEG)
      (10 X25DCEL TPC 183 TEG)(11 X25DTEL ORDB 120 CGI_TEG)
                       (12 NILPROT)(13 X25DCEL TPC 178 TEG)
          (14 X25DCEL TPC 184 TEG)(15 X25DCEL TPC 141 TEG)
                        (16 NILPROT)(17 X25DCEL DA 12 TEG)
            (18 X25DCEL DA 22 TEG)(19 X25DCEL TPC 142 TEG)
                       (20 NILPROT)(21 NILPROT)(22 NILPROT)
                       (23 X25DCEL TPC 197 TEG)(24 NILPROT)
           (25 NILPROT)(26 NILPROT)(27 X25DCEL TPC 198 TEG)
 (28 NILPROT)(29 NILPROT)(30 NILPROT)(31 X25DCEL DA 32 TEG)
3
            (1 X25DCEL TPC 143 TEG)(2 X25DCEL TPC 145 TEG)
                   (3 X25DCEL ORDB 233 CGI_TEG)(4 NILPROT)
            (5 X25DCEL TPC 144 TEG)(6 X25DCEL TPC 146 TEG)
                   (7 X25DCEL ORDB 132 CGI_TEG)(8 NILPROT)
           (9 X25DCEL TPC 179 TEG)(10 X25DCEL TPC 185 TEG)
                 (11 X25DCEL ORDB 131 CGI_TEG)(12 NILPROT)
          (13 X25DCEL TPC 180 TEG)(14 X25DCEL TPC 186 TEG)
                       (15 X25DCEL TPC 147 TEG)(16 NILPROT)
              (17 X25DCEL DA 13 TEG)(18 X25DCEL DA 23 TEG)
           (19 X25DCEL TPC 148 TEG)(20 NILPROT)(21 NILPROT)
           (22 NILPROT)(23 X25DCEL TPC 191 TEG)(24 NILPROT)
           (25 NILPROT)(26 NILPROT)(27 X25DCEL TPC 192 TEG)
 (28 NILPROT)(29 NILPROT)(30 NILPROT)(31 X25DCEL DA 33 TEG)
```

Enhanced table TPCINV

This table contains two new fields: TPCTYPE and RTSTIMR.

- Field TPCTYPE

  This field is a string of a maximum of eight characters that define the type of TPC that you enter. The NT_TPC, IBMMPX16 and IBMMPX20 are examples of TPC types you enter. This field is a label that allows operating company personnel to determine the type of TPC with datafill.

- Field RTSTIMR

  This field defines the amount of time that the CC waits before the CC decides that an attempt to RTS an Operator Position fails. A position can

fail to RTS for different reasons. Examples of these reasons are the position is not powered up or software/hardware failure.

Before this feature, when the CC attempted to RTS a position, the CC waited approximately 7 min for a response. The response was that the RTS was successful or not successful. If the position did not RTS because of a real problem, the position notified the CC that the RTS failed. If the position failed to RTS because the position was not powered up, the CC waited 7 min. The CC waited 7 min to decide that the RTS failed.

The original setting for the timer value was 7 min. This time was the maximum amount of time a Northern Telecom TOPS MP position required to RTS. A TOPS Position Controller controls the NT TOPS MP position. Because other TPC and position vendors are now present, this amount of time varies. Field RTSTIMR allows each type of TPC to define this RTS waiting period for the positions that the TPC type controls.

The field RTSTIMR integer value can be in the range 0-31. Multiply this integer by 20 s. The result is the approximate amount of time the CC waits for a response to the RTS attempt. If you enter RTSTIMR to `3`, the CC waits 60 s/1 min (3 x 20 s = 60 s = 1 min) for a response. If you enter RTSTIMR to `30`, the CC waits approximately 10 min (30 x 20 s = 600 s = 10 min).

The datafill for three different TPCs appears in the following figure. The TPC 0 is an IBM MPX TPC that controls 16 IBM MPX Operator Positions. The TPC 0 has an RTS timer value that causes the CC to wait 20 s for a response to the RTS attempt. The TPC 1 is an Northern Telecom TOPS Position Controller that controls four TOPS MP positions. The TPC 1 has an RTS timer value that causes the CC to wait 7 min for a response to the RTS attempt.

MAP example for table TPCINV

```
  TPCNAME FRTYPE FRNO SHPOS FLOOR ROW FRPOS LOAD
 TMSNO TMSCKTNO TMSCKTTS TPCTYPE RTSTIMR CLUSTRSZ
_____________________________________________________
  TPC   0    PCE    0     0    0  AA     0   XX
    0       0    (1)(2)  IBMMPX16     1     16
  TPC   1    PCE    0     0    0  AA     0   XX
    0       1    (1)(2)   NT_TPC     21      4
  TPC   2    PCE    0     0    0  AA     0   XX
    0       2    (1)(2)  IBMMPX20     1     20
```

TOPS Increased Multiplexing (continued)

Tailored PVC layout

Before this feature, the TOPS Position Controller expected a specified format for a PVC layout. This feature allows datafill in different PVC designs, table TMSPVC, for different TPCs.

When the maximum number of positions for each TPC was four, the following action occured. The first four PVCs of that PVC layout of the TPC link were dedicated to be DA PVCs. One condition of the above action is that the positions subtending a TPC required or did not require DA PVCs. A less limited PVC design can be created for each TPC. This creation gives each TPC a tailored PVC layout that fits the correct requirements.

All TPCs require MTC and CC call processing PVCs. This tailoring ability allows a PVC layout for a TPC to add ORDB PVCs or DA PVCs, both PVCs, or no PVC. The positions subtending the TPC determine if a specified PVCs is a requirement for a TPC. For example, a TPC does not require ORDB PVCs if the following condition is present. The TPC positions did not require access to an ORDB database through TMS. The CC MTC and CC Call Processing PVCs are a requirement. The MTC and PVCs are a requirement even if DA PVCs and/or ORDB PVCs are present. Enter the CC MTC PVC and the CC Call Processing PVCs that follows first.

Note: The decision if specified PVCs are a requirement occurs at a TPC level. All or none of the positions subtending the TPC can require the specified PVCs.

PVC layout examples

Four different PVC layouts can be created for a TPC. Each PVC layout requires the datafill of CC MTC and call processing PVCs. The ORDB and DA PVCs are datafill options. Four different examples of PVC layouts for a TPC that controls 16 Operator Positions appear below.

MAP example for table TMSPVC, PVC layout with ORDB PVCs - DA not a requirement

```
 PVCKEY                                                PVCTAB
-------------------------------------------------------------
 ORDB 100 CGI16                      (17 TPC 100 MPX16 0)
 TPC  100 MPX16           (1 CC 0 DMS 0)(16 CC 0 DMS 1)
                                     (17 ORDB 100 CGI16 0)
```

MAP example for table TMSPVC, PVC layout with DA PVCs - ORDB not a requirement

```
 PVCKEY
                                                    PVCTAB
_____________________________________________________________
DA   10 MPX                              (16 TPC 101 MPX 0)
TPC 101 MPX  (1 CC 0 DMS 0)(16 CC 0 DMS 1)(16 DA 10 MPX 0)
```

MAP example for table TMSPVC, PVC layout with DA and ORDB PVCs

```
PVCKEY                                                PVCTAB
-------------------------------------------------------
 DA    20 MPX20                        (16 TPC 102 MPX20 0)
 ORDB 133 CGI20                        (17 TPC 102 MPX20 0)
 TPC  102 MPX20               (1 CC 0 DMS 0)(16 CC 0 DMS 1)
                   (17 ORDB 133 CGI20 0)(16 DA 20 MPX20 0)
```

MAP example for table TMSPVC, PVC layout without DA or ORDB PVCs

```
 PVCKEY                                               PVCTAB
-----------------------------------------------------------
 TPC 103 MPX20               (1 CC 0 DMS 0)(16 CC 0 DMS 1)
```

Selective update of table TMSPVC

Earlier, when the system returned a TMS to service, the system downloaded each PVC layout in table TMSPVC to that TMS. A method was not available to determine which layouts the TMSs used. This feature allows the download of the required PVC layouts to the TMS the system RTS.

When the system RTS a TMS, the system downloads table SPECCONN to the TMS. Table SPECCONN defines the connection of each DCH link for each TMS. Table TDCDEF defines a PVC layout entered for each DCH link. With the above information, you can determine the PVC layouts from table TMSPVC that each TMS requires. Through a cross reference between tables SPECCONN and TDCDEF, the CC can download the PVC layouts required to each TMS.

Dynamic update of table TMSPVC

Before this feature, a method was not available to update an INSV TMS with changes in table TMSPVC. All TMSPVC table information was static. For

TOPS Increased Multiplexing (continued)

example, downloaded static information routes only to the correct TMS on BSY/RTS, PMRESET PM, or LoadPM DATA.

This feature provides a method to dynamically update an in-service (INSV) TMS with changes in TMSPVC. To bring a TMS out of service and update the TMS with new TMSPVC table information is not a requirement any longer. When you enter a connection in table SPECCONN, the system downloads necessary table information from TDCDEF to the TMS. This feature expands this downloaded table information to include the TMSPVC table information. For example, add a tuple to TMSPVC, and enter datafill in SPECCONN that uses the new TMSPVC tuple. If you perform these previous two actions, the system downloads the TMSPVC tuple information to the TMS. The TMS is INSV.

TPCs handling increased number of Operator Positions

This feature increases the number of operators that can receive data over a TMS-to-TPC data link connection. Before this feature, a maximum of four Operator Positions could subtend a TPC. Software enforced this limit. This software limit changes to allow a maximum of 96 Operator Positions for each TPC. Current TMS engineering configurations limit this software to 16 or 20 Operator Positions maximum.

> ***Note:*** This feature affects the number of Operator Positions that can subtend a TPC. This feature does not affect the number of positions that can subtend a TMS. This restriction remains at a maximum of 96 Operator Positions for each TMS.

The first application of this feature is for an Operator Position. This Operator Position does not require access to a DA database through the TMS. This Operator Position requires access through the local area network (LAN) of the Operator Position. In the 16 and 20 Operator Position examples that follow, related DA datafill is not in tables TMSPVC, TMSPSDEV, TDCDEF, and SPECCONN. The ORDB database access through the TMS is an option. The datafill for a TPC determines ORDB database access.

Facilities savings for each TMS

This feature removes the restriction to datafill all voice links to a TPC on the same DS1 link. Use 16 or 20 Operator Position TPC configurations to assist the following action. You can enter the voice and data links for all 96 Operator Positions on a TMS on five DS1 links and not six links. This change in number of links provides a facilities savings of one DS1 link for each TMS. When DS1 channels configure with 20-position TPCs, 22 DS1 channels are for use on four DS1 links. Eighteen DS1 channels are for use on the fifth DS1 link.

TOPS Increased Multiplexing (continued)

When the system configures a TMS with 16-position TPCs, the following condition is present. Eighteen DS1 channels are for use on each DS1 link for the first five TPCs. The voice and data links of the sixth TPC distribute across the DS1 channels of the five DS1 links that remain. This feature reduces the number of DS1 channels required for a TMS to control 96 Operator Positions by 25%. This feature reduces 144 channels to 108 channels for 16-position TPCs. This feature reduces 144 channels to 106 channels for 20-position TPCs.

Note 1: The 16-position TPC configuration requires the distribution of the voice and data links of one TPC across the five DS1 links. This distribution saves the facilities the cost of the sixth DS1 link. See the “Limits" section for additional information.

Note 2: To achieve 96 positions for each TMS with TPCs that control 20 Operator Positions, the following condition is present. A fifth TPC that controls 16 positions is a requirement.

How the voice and data links for 16-position and 20-position TPCs map to the channels appears in the following figure. The TPCs map to the channels on five DS1 links. Enter both data links to a TPC on the same DS1 link.

TOPS Increased Multiplexing (continued)

DS1 link/channel mapping for 16-position and 20-position TPCs

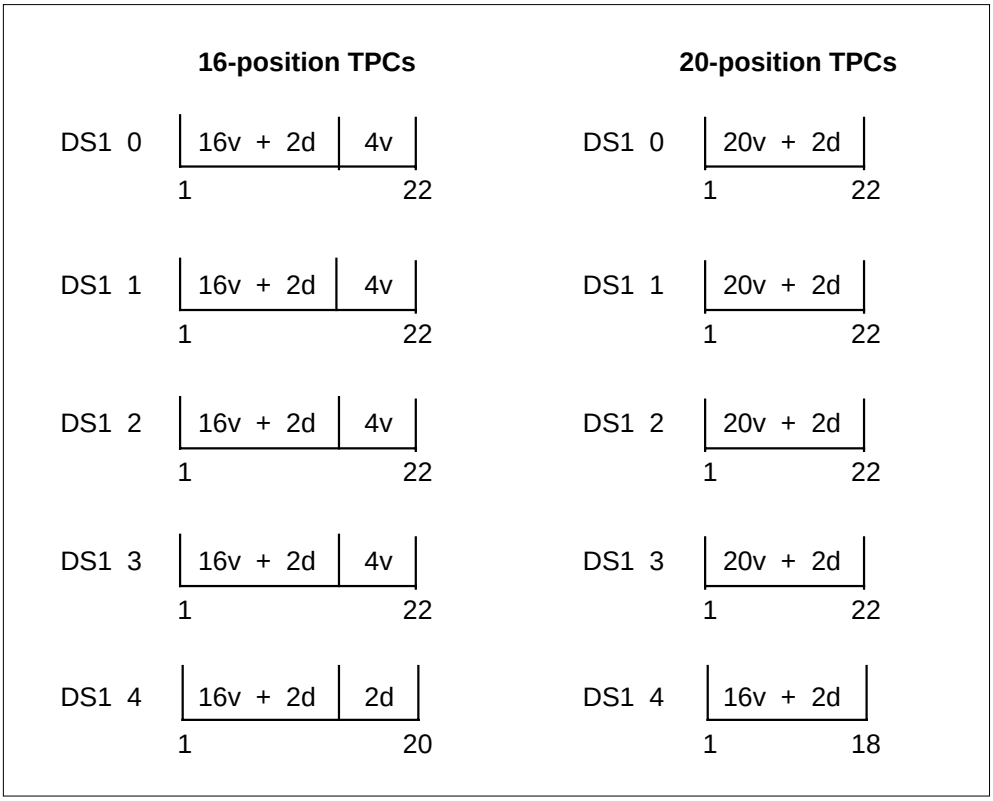

TPC datafill guidelines

This feature changes the method of TPC configuration. Datafill guidelines are a requirement. For example, data link sparing can affect the TPC configuration.

The guidelines appear as follows:

- Enter the TPC data links on different D-Channel Handler (DCH) cards. This entry makes sure that on one DCH card failure, the second data link of the TPC can function.
- Enter the primary and secondary data links to a TPC on the same DS1 link.
- Enter each set of TPC data links, primary and secondary, on different DS1 links. The same DS1 link can carry the data for the primary and secondary links to each TPC on a TMS. When this action occurs, the loss of that DS1 results in the loss of data to *every* TPC. Enter each set of data links of a TPC on different DS1 links.

TOPS Increased Multiplexing (continued)

Connection through digital DS1 cross-connect equipment

The Operating Company can connect the TMS to the subtending TPCs of the TMS through long haul DS1 links from the TMS. The operating company can connect the TMS through DS1 links from Digital DS1 Cross-Connect equipment (DNX). The TMS and the DNX are normally in the same office. Advantages of connection through the DNX are present.

The use of a DNX to connect the TMS to the TPCs of the TMS allows the operating company to split the DS1 channels. The operating company splits the channels from the TMS to the group the operating company determines is best. For example, the system must transmit data links of each TPC from the TMS across the same DS1 link. The operating company can use a DNX to split data links of each TPC across different DS1 links. This DNX removes the possibility that the system can lose the primary and secondary data links of a TPC. The system can lose the data links on a DS1 link failure.

> ***Note:*** This link failure occurs between the DNX and the subtending TPCs. A link failure between the TMS and the DNX results in the loss of the data links of both TPCs.

This feature reduces the number of DS1 channels required for a TMS to control 96 Operator Positions by a minimum of 36 channels. If the Operating Company uses a DNX, these freed channels can transmit other Operating Company-specific DS1 protocols.

One DNX use that connects a TMS to the TPCs of the TMS appears in the following figure. This example is a TMS that controls six 16-position TPCs. Six DS1 links connect the TMS to the DNX, one link for each TPC. This connection removes the risk of a DS1 failure between the TMS and the DNX to drop data to two TPCs. In this example, the DNX has two advantages:

- to split the primary and secondary data links of each TPC across different DS1 links
- to reduce the number of DS1 links required from 6 to 5

TOPS Increased Multiplexing (continued)

Using a DNX to connect a TMS to the TPCs of a TMS

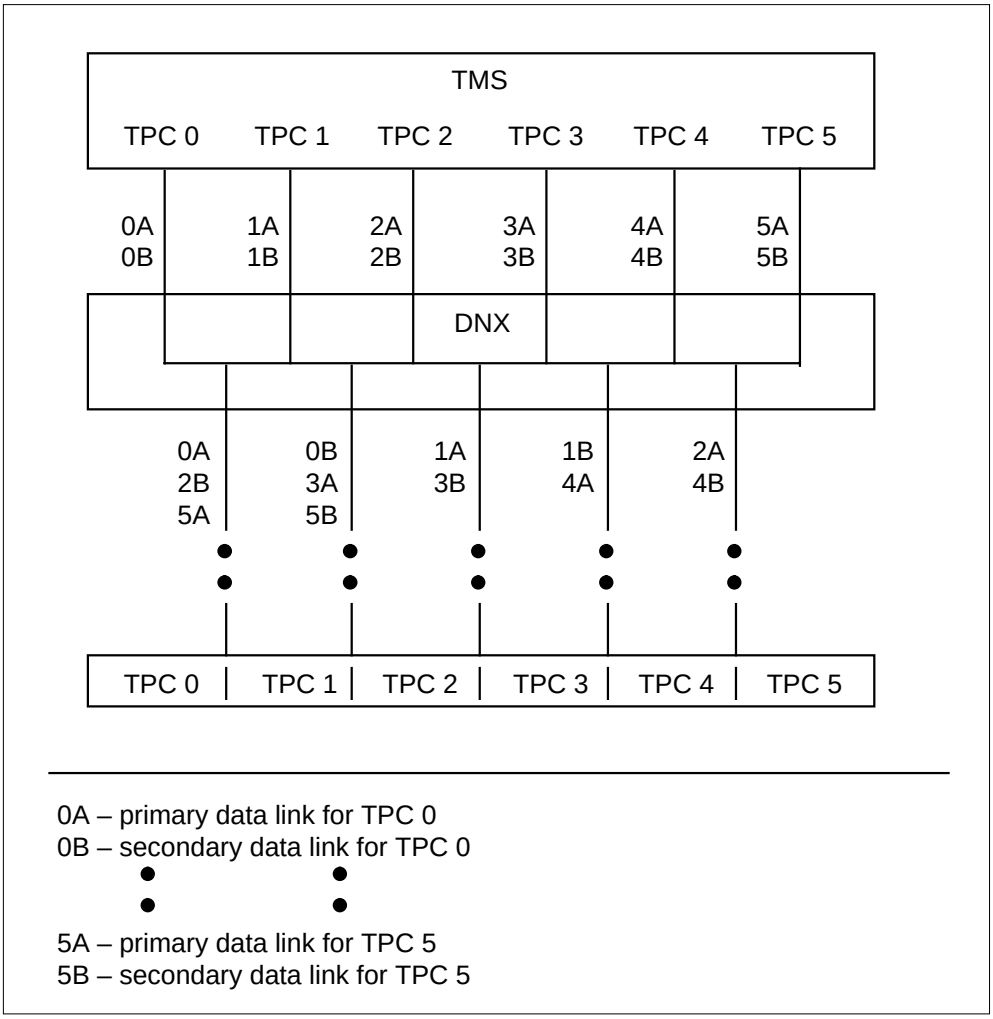

Guidelines for a16-Position TPC

Datafill for a 16-position TPC Without TMS ORDB A TOPS position controller (TPC) that controls 16 positions without access to an operator reference database (ORDB) database through TOPS message switch (TMS) appears in the following datafill example.

A block diagram that represents the logical connections that this sample datafill sets appears in the following figure. The diagram does not contain information on voice link connections.

TOPS Increased Multiplexing (continued)

In this example, operator positions are in table TOPSPOS and the datafill for the TPC data links is in table TPCINV.

Logical connection of TMS to 16-position TPC without ORDB

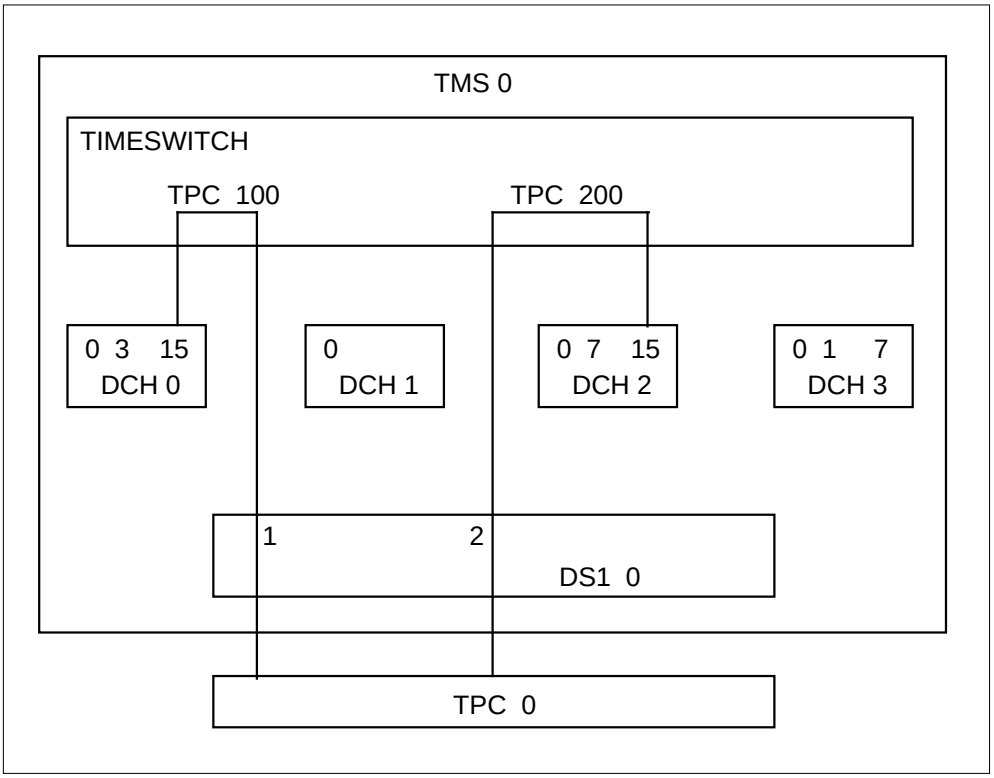

The permanent virtual switch (PVC) layout descriptions are in table TMSPVC. A logical model of the sample PVC layout appears in the following figure. This datafill uses the configuration type MPX16 that table PVCTYPE defines. This TMSPVC datafill does not contain ORDB or directory assistance (DA) PVCs because you cannot access databases through the TMS. The only PVCs the system requires are 1 CC MTC and 16 CC call processing PVCs. Table TDCDEF contains the assignment of PVC layout to a D-channel handler (DCH) channel. Table SPECCONN provides the connections between the DS1 channels and the DCH channels.

Sample datafill for 16 operator positions without ORDB access appears in the following figure.

TOPS Increased Multiplexing (continued)

PVC layout for 16-position TPC without ORDB

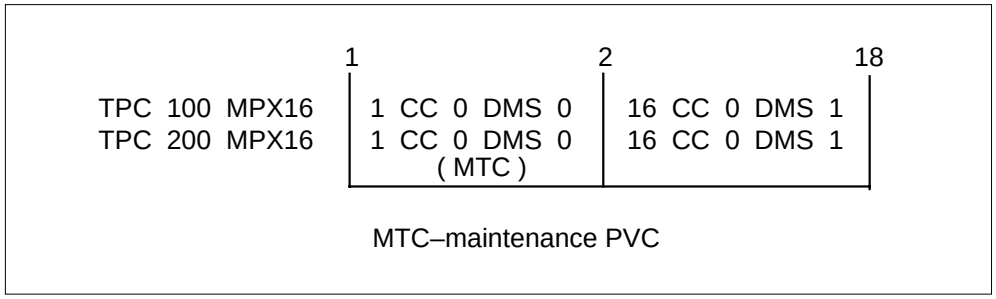

Sample datafill for 16 operator positions without ORDB access appear in the following examples.

The following MAP example for table PVCTYPE with datafill for 16-position TPC without ORDB

```
      VALUE                                SYMBOL
_____________________________________________________
7                                          MPX16
```

The following MAP example for table TPCINV with datafill for 16-position TPC without ORDB

```
  TPCNAME FRTYPE FRNO SHPOS FLOOR ROW FRPOS LOAD
TMSNO TMSCKTNO TMSCKTTS TPCTYPE RTSTIMR CLUSTRSZ
_____________________________________________________
      TPC   0    PCE    0     0     0  AA     0   XX
  0      0     (1)(2)  IBMMPX16    1      16
```

TOPS Increased Multiplexing (continued)

The following MAP example for table TOPSPOS with datafill for 16-position TPC without ORDB

```
POSNO          VCCKT VCPDGRP CARDCODE              DATAPATH
                     POSAREA
_____________________________________________________________
 000    TMS 0 0  3    NPDGP    DS1SIG    TMS MP OPP    0  0
          OPR 2 TOPSACD ALL ALL
 001    TMS 0 0  4    NPDGP    DS1SIG    TMS MP OPP    0  1
          OPR 2 TOPSACD ALL ALL
                              *
                              *
                              *
 014    TMS 0 0 17    NPDGP    DS1SIG    TMS MP OPP    0 14
          OPR 2 TOPSACD ALL ALL
 015    TMS 0 0 18    NPDGP    DS1SIG    TMS MP OPP    0 15
```

The following MAP example for table TMSPSDEV with datafill for 16-position TPC without ORDB

```
      DEVNAME   TMSNO                    CKTTAB
_____________________________________________________________
              **  nothing datafilled  **
```

The following MAP example for table ISGDEF with datafill for 16-position TPC without ORDB

```
ISGNO    PMTYPE   PMNO    SERVICE              CHNLTAB
_____________________________________________________________
   0       TMS      0      (TDC)          (15 TDC 56K OFF)
   2       TMS      0      (TDC)          (15 TDC 56K OFF)
```

The following MAP example for table TDCDEF with datafill for 16-position TPC without ORDB

```
 ISGNO                                          TDCTAB
_____________________________________________________________
  0                           (15 X25DCEL TPC 100 MPX16)
  2                           (15 X25DCEL TPC 200 MPX16)
```

TOPS Increased Multiplexing (continued)

Datafill for a 16-position TPC with TMS ORDB A TPC that controls 16 operator positions with access to an ORDB database through TMS appears in the following figure. The logical connections that this sample datafill sets appears in the block diagram. The diagram does not contain information on voice link connections.

Logical connection of TMS to 16-position TPC with ORDB

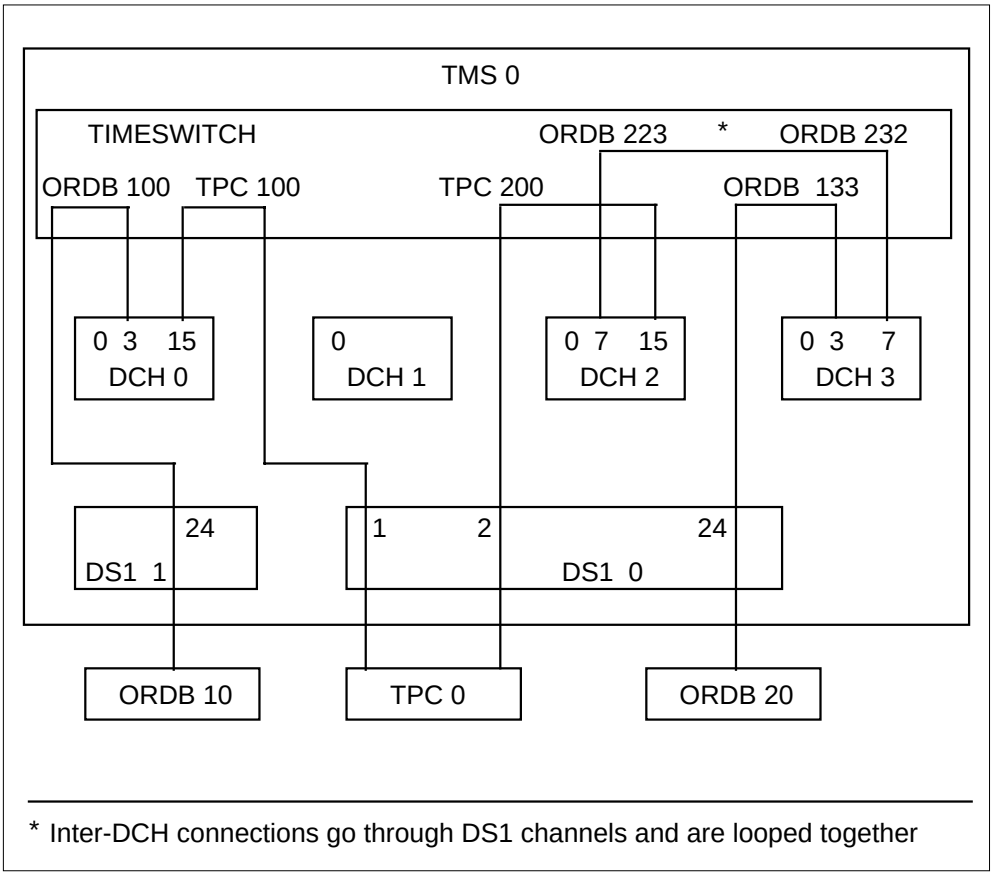

In later examples, all operator positions are entered in table TOPSPOS. Datafill for TPC data links is in table TPCINV. Datafill for ORDB database data links is in table TMSPSDEV.

The PVC layout descriptions are entered in table TMSPVC. A logical model of the sample PVC design appears in the following figure. This datafill uses configuration types MPX16 and CGI16. Table PVCTYPE provides these configuration types. This TMSPVC datafill is for communication to an ORDB database only. A definition for ORDB PVCs occurs because the DA database does not connect through TMS.

TOPS Increased Multiplexing (continued)

One CC MTC, 16 CC call processing, one ORDB MTC, and 16 ORDB call processing PVCs are defined because this TPC controls 16 positions. Table TDCDEF contains the assignment of a PVC layout to a DCH channel. Table SPECCONN provides the connections:

- between DS1 channels and DCH channels or for inter-DCH connections
- between DCH channels and DCH channels

PVC layout for 16-position TPC with ORDB

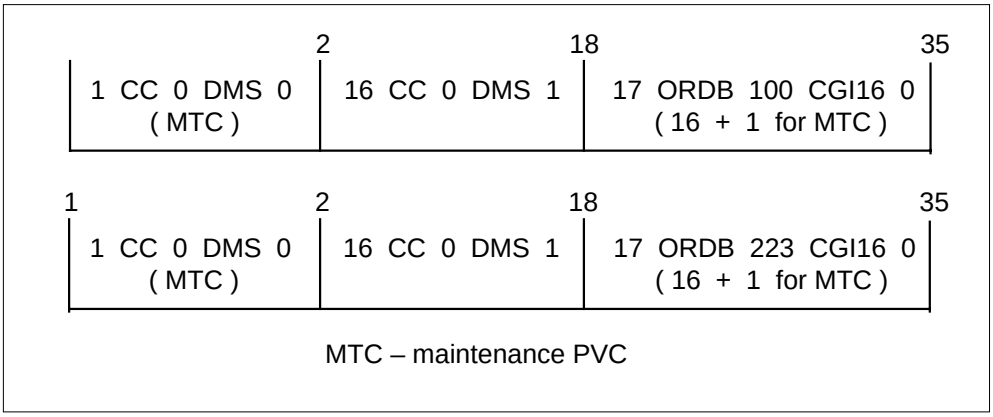

Sample datafill for 16 operator positions with ORDB access appears in the following example.

The following MAP example for table PVCTYPE with datafill for 16-position TPC with ORDB

```
VALUE                                   SYMBOL
_____________________________________________
        7                               MPX16
        8                               CGI16
```

TOPS Increased Multiplexing (continued)

The following MAP example for table TMSPVC with datafill for 16-position TPC with ORDB

```
PVCKEY                                                    PVCTAB
_____________________________________________________________________
ORDB 223 CGI16                          (17 TPC 200 MPX16 0)
ORDB 232 CGI16                         (17 ORDB 133 CGI16 0)
ORDB 100 CGI16                           (17 TPC 100 MPX16 0)
ORDB 133 CGI16                         (17 ORDB 232 CGI16 0)
TPC  100 MPX16                 (1 CC 0 DMS 0)(16 CC 0 DMS 1)
                                       (17 ORDB 100 CGI16 0)
TPC  200 MPX16                 (1 CC 0 DMS 0)(16 CC 0 DMS 1)
                                       (17 ORDB 223 CGI16 0)
```

The following MAP example for table TPCINV with datafill for 16-position TPC with ORDB

```
TPCNAME FRTYPE FRNO SHPOS FLOOR ROW FRPOS LOAD
  TMSNO TMSCKTNO TMSCKTTS TPCTYPE RTSTIMR CLUSTRSZ
_____________________________________________________________________
    TPC   0    PCE    0     0     0  AA     0   XX
        0      0     (1)(2)  IBMMPX16    1       16
```

The following MAP example for table TOPSPOS with datafill for 16-position TPC with ORDB

```
   POSNO         VCCKT VCPDGRP CARDCODE              DATAPATH
                      POSAREA
_____________________________________________________________________
  000   TMS 0 0  3   NPDGP   DS1SIG   TMS MP OPP   0  0
           OPR 2 TOPSACD ALL ALL
  001   TMS 0 0  4   NPDGP   DS1SIG   TMS MP OPP   0  1
       OPR 2 TOPSACD ALL ALL
                            *
                            *
                            *
014   TMS 0 0 17   NPDGP   DS1SIG   TMS MP OPP   0 14
         OPR 2 TOPSACD ALL ALL
  015   TMS 0 0 18   NPDGP   DS1SIG   TMS MP OPP   0 15
 OPR 2 TOPSACD ALL ALL
```

TOPS Increased Multiplexing (continued)

The following MAP example for table TMSPSDEV with datafill for 16-position TPC with ORDB

```
      DEVNAME      TMSNO         CKTTAB
_____________________________________________________
      ORDB  1       0          10 CHNLS  (1)
      ORDB  2       0          11 CHNLS  (1)
      ORDB 10       0           1 CHNLS (24)
      ORDB 20       0           0 CHNLS (24)
```

The following MAP example for table ISGDEF with datafill for 16-position TPC with ORDB

```
 ISGNO PMTYPE PMNO SERVICE                              CHNLTAB
_____________________________________________________________
   0    TMS    0   (TDC)   (3 TDC 56K OFF)(15 TDC 56K OFF)
   2    TMS    0   (TDC)   (7 TDC 56K OFF)(15 TDC 56K OFF)
   3    TMS    0   (TDC)    (3 TDC 56K OFF)(7 TDC 56K OFF)
```

The following MAP example for table TDCDEF with datafill for 16-position TPC with ORDB

```
 ISGNO                                                  TDCTAB
_____________________________________________________________
  0  (3 X25DCEL ORDB 100 CGI16)(15 X25DCEL TPC 100 MPX16)
  2  (7 X25DTEL ORDB 223 CGI16)(15 X25DCEL TPC 200 MPX16)
  3  (3 X25DCEL ORDB 133 CGI16)(7 X25DCEL ORDB 232 CGI16)
```

TOPS Increased Multiplexing (continued)

The following MAP example for table SPECCONN with datafill for 16-position TPC with ORDB

```
ENDPT1          ENDPT2                CONTYPE   STATUS
_____________________________________________________
DCHCHNL   0 15   DS1   TMS   0  0  1   CON       ACTIVE
DCHCHNL   2 15   DS1   TMS   0  0  2   CON       ACTIVE
    * Direct ORDB database connections *
DCHCHNL   0  3   DS1   TMS   0  1 24   CON       ACTIVE
DCHCHNL   3  3   DS1   TMS   0  0 24   CON       ACTIVE
             * Inter-DCH connections *
DCHCHNL   2  7   DS1   TMS   0 11  1   CON       ACTIVE
DCHCHNL   3  7   DS1   TMS   0 10  1   CON       ACTIVE
```

Optimum internal TMS connectivity for 16-position TPCs This feature provides the ability to control more operator positions from each TPC. To control these positions, connect the TPCs to the TMS to allow correct load distribution.

How the DCH cards handle DA traffic determines the message capacity of the DCH cards. Each DCH card can handle the messaging for a maximum of 24 operator positions with DA database access through the TMS. If DA database access is not available through TMS, each DCH card can handle the messaging. Each card can handle the messaging for a maximum of 48 operator positions.

Note: The primary function of this feature is for an operator position vendor that controls all DA database communication. This communication occurs through the LAN of the position and not through the TMS. Each DCH card can handle the messaging for a maximum of 48 operator positions.

The correct connectivity to the TMS for TPCs controlling 16 operator positions appears in the following figure. Connection of 96 positions for each TMS can occur. This design distributes the load. If a single DCH card fails, additional DCH cards do not have to handle the messaging for more than 48 operator positions. The result of a dual DCH card failure is the loss of 16 operator positions.

The distribution of the data links of each TPC occurs across different DCH cards.

Note: For redundancy, each DCH card connects to each of the two ORDB databases through DCH card to DCH card connections.

TMS internal connectivity for 16-position TPCs

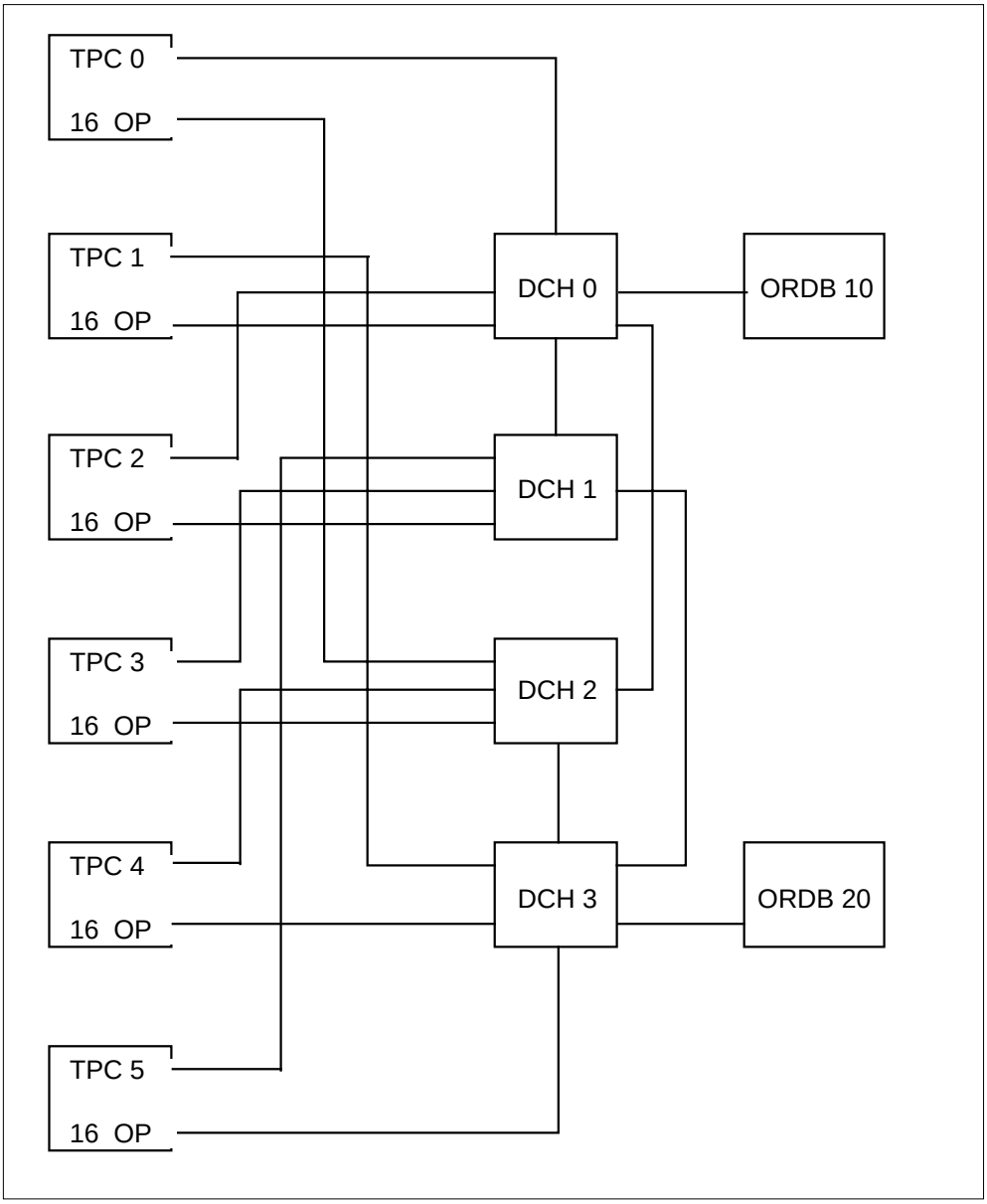

Guidelines for cutting over to 16-position TPCs for TMS without ORDB This feature allows an operator position vendor to control DA database communication. This communication occurs through the LAN of the

TOPS Increased Multiplexing (continued)

position. This communication does not occur through the TMS. This document provides two methods for gradual cut-over of one 16-position TPC:

- a TMS without current ORDB connections
- a TMS with current ORDB connections

This section describes the first method. The next section describes the second method.

To cut over a complete TMS, busy (BSY) the TMS. Add or change the following datafill:

- PVCTYPE
- TMSPVC
- TPCINV
- ISGDEF
- TDCDEF
- SPECCONN

Reconfigure the TPCs/positions. Return to service (RTS) the TMS.

Use the following procedure to gradually cut over from a standard (STD) configuration of 4 positions/TPC to an multiplex (MPX) configuration of 16 positions/TPC:

1. Determine 16 positions/4 TPCs on the same DS-1 link. Offline (OFFL) (INB) the voice trunks and the positions, the TPCs and ISDN service group (ISG) channels.
2. Delete the SPECCONN connections that correspond to these 4 TPCs.
3. To nil the TDCDEF datafill that corresponds to deleted SPECCONN connections, set the associated CHNLDATA of the TDC_CHNL to NILPROT.
4. Delete the 16 positions from TOPSPOS.
5. Delete the 4 TPCs from TPCINV.
6. Add TPC 0 to table TPCINV. The TPC 0 must be one of the 4 TPCs that you delete in the earlier step. You can enter TPC number if the number is not a duplicate tuple. The TPC 0 is an example. In the following sample datafill, the DS-1 link that the TPCs and deleted positions free is DS1 0.
7. Add 16 positions to table TOPSPOS. Place the positions on TPC 0 and enter the TPCPOSNOs from 0 to 15.

TOPS Increased Multiplexing (continued)

8. Reconfigure the data/hardware of the Terminal Position Controller to control 16 operator positions.
9. Add MPX16 to table PVCTYPE.

   Note: Perform this step only one time. This table does not allow duplicate entries.

10. Add the TMSPVC datafill that defines the PVC layouts for the primary and secondary data links to the 16-position TPC. Table TPCINV contains the addition of TPC. For example, TPC 100 MPX16 and TPC 200 MPX16 for TPC 0, TPC 101 MPX16 and TPC 201 MPX16 for TPC 1 contains the addition of TPC.
11. Add the TDCDEF datafill for the primary and secondary TPC data links with PVC layouts added to TMSPVC.
12. Add the SPECCONN datafill for the primary and secondary data links defined in TMSPVC. The datafill for each set of primary and secondary data links appears in the following example.
13. RTS all hardware and links.
14. Repeat all steps for each 16-position TPC you add to service.

The following MAP example for table PVCTYPE with datafill for cutting over to 16-position TPC without ORDB

```
VALUE                                SYMBOL
_______________________________________________________________
  7                                   MPX16
```

TOPS Increased Multiplexing (continued)

The following MAP example for table TMSPVC with datafill for cutting over to 16-position TPC without ORDB

```
 PVCKEY
                                                  PVCTAB
_____________________________________________________________
TPC  100 MPX16              (1 CC 0 DMS 0)(16 CC 0 DMS 1)
TPC  200 MPX16              (1 CC 0 DMS 0)(16 CC 0 DMS 1)
TPC  101 MPX16              (1 CC 0 DMS 0)(16 CC 0 DMS 1)
TPC  201 MPX16              (1 CC 0 DMS 0)(16 CC 0 DMS 1)
TPC  102 MPX16              (1 CC 0 DMS 0)(16 CC 0 DMS 1)
TPC  202 MPX16              (1 CC 0 DMS 0)(16 CC 0 DMS 1)
TPC  103 MPX16              (1 CC 0 DMS 0)(16 CC 0 DMS 1)
TPC  203 MPX16              (1 CC 0 DMS 0)(16 CC 0 DMS 1)
TPC  104 MPX16              (1 CC 0 DMS 0)(16 CC 0 DMS 1)
TPC  204 MPX16              (1 CC 0 DMS 0)(16 CC 0 DMS 1)
TPC  105 MPX16              (1 CC 0 DMS 0)(16 CC 0 DMS 1)
TPC  205 MPX16              (1 CC 0 DMS 0)(16 CC 0 DMS 1)
```

The following MAP example for table TPCINV datafill for cutting over to 16-position TPC without ORDB

```
 TPCNAME  FRTYPE  FRNO  SHPOS  FLOOR  ROW  FRPOS  LOAD
 TMSNO TMSCKTNO TMSCKTTS  TPCTYPE RTSTIMR CLUSTRSZ
_____________________________________________________________
 TPC     0    PCE    0     0     0   AA     0      XX
    0          0   (1)(2) IBMMPX16       1           16
 TPC     1    PCE    0     0     0   AA     0      XX
    0          1   (1)(2) IBMMPX16       1           16
 TPC     2    PCE    0     0     0   AA     0      XX
    0          2   (1)(2) IBMMPX16       1           16
 TPC     3    PCE    0     0     0   AA     0      XX
    0          3   (1)(2) IBMMPX16       1           16
 TPC     4    PCE    0     0     0  AA      0      XX
    0          4   (1)(2) IBMMPX16       1           16
 TPC     5    PCE    0     0     0  AA      0      XX
   0           5   (1)(2) IBMMPX16       1           16
```

TOPS Increased Multiplexing (continued)

The following MAP example for table ISGDEF with datafill for how to cut over to 16-position TPC without ORDB

```
ISGNO PMTYPE PMNO SERVICE                                    CHNLTAB
_____________________________________________________________________
0   TMS   0   (TDC)
              (0 RESERVED)(1 TDC 56K OFF)(2 TDC 56K OFF)
            (3 TDC 56K OFF)(4 TDC 56K OFF)(5 TDC 56K OFF)
            (6 TDC 56K OFF)(7 TDC 56K OFF)(8 TDC 56K OFF)
          (9 TDC 56K OFF)(10 TDC 56K OFF)(11 TDC 56K OFF)
         (12 TDC 56K OFF)(13 TDC 56K OFF)(14 TDC 56K OFF)
          (15 TDC 56K OFF)(16 TDC 56K OFF)(17 TDC 56K OFF)
          (18 TDC 56K OFF)(19 TDC 56K OFF)(20 TDC 56K OFF)
          (21 TDC 56K OFF)(22 TDC 56K OFF)(23 TDC 56K OFF)
          (24 TDC 56K OFF)(25 TDC 56K OFF)(26 TDC 56K OFF)
          (27 TDC 56K OFF)(28 TDC 56K OFF)(29 TDC 56K OFF)
                          (30 TDC 56K OFF)(31 TDC 56K OFF)
1   TMS   0   (TDC)
               (0 RESERVED)(1 TDC 56K OFF)(2 TDC 56K OFF)
             (3 TDC 56K OFF)(4 TDC 56K OFF)(5 TDC 56K OFF)
             (6 TDC 56K OFF)(7 TDC 56K OFF)(8 TDC 56K OFF)
            (9 TDC 56K OFF)(10 TDC 56K OFF)(11 TDC 56K OFF)
           (12 TDC 56K OFF)(13 TDC 56K OFF)(14 TDC 56K OFF)
           (15 TDC 56K OFF)(16 TDC 56K OFF)(17 TDC 56K OFF)
           (18 TDC 56K OFF)(19 TDC 56K OFF)(20 TDC 56K OFF)
           (21 TDC 56K OFF)(22 TDC 56K OFF)(23 TDC 56K OFF)
           (24 TDC 56K OFF)(25 TDC 56K OFF)(26 TDC 56K OFF)
           (27 TDC 56K OFF)(28 TDC 56K OFF)(29 TDC 56K OFF)
                           (30 TDC 56K OFF)(31 TDC 56K OFF)
2   TMS   0   (TDC)
               (0 RESERVED)(1 TDC 56K OFF)(2 TDC 56K OFF)
             (3 TDC 56K OFF)(4 TDC 56K OFF)(5 TDC 56K OFF)
             (6 TDC 56K OFF)(7 TDC 56K OFF)(8 TDC 56K OFF)
            (9 TDC 56K OFF)(10 TDC 56K OFF)(11 TDC 56K OFF)
           (12 TDC 56K OFF)(13 TDC 56K OFF)(14 TDC 56K OFF)
           (15 TDC 56K OFF)(16 TDC 56K OFF)(17 TDC 56K OFF)
           (18 TDC 56K OFF)(19 TDC 56K OFF)(20 TDC 56K OFF)
           (21 TDC 56K OFF)(22 TDC 56K OFF)(23 TDC 56K OFF)
           (24 TDC 56K OFF)(25 TDC 56K OFF)(26 TDC 56K OFF)
           (27 TDC 56K OFF)(28 TDC 56K OFF)(29 TDC 56K OFF)
                          (30 TDC 56K OFF)(31 TDC 56K OFF)
```

TOPS Increased Multiplexing (continued)

The following MAP example for table ISGDEF with datafill for cutting over to 16-position TPC without ORDB (continued)

```
ISGNO PMTYPE PMNO SERVICE                                  CHNLTAB
_____________________________________________________________________
3   TMS   0   (TDC)
              (0 RESERVED)(1 TDC 56K OFF)(2 TDC 56K OFF)
            (3 TDC 56K OFF)(4 TDC 56K OFF)(5 TDC 56K OFF)
            (6 TDC 56K OFF)(7 TDC 56K OFF)(8 TDC 56K OFF)
          (9 TDC 56K OFF)(10 TDC 56K OFF)(11 TDC 56K OFF)
          (12 TDC 56K OFF)(13 TDC 56K OFF)(14 TDC 56K OFF)
          (15 TDC 56K OFF)(16 TDC 56K OFF)(17 TDC 56K OFF)
          (18 TDC 56K OFF)(19 TDC 56K OFF)(20 TDC 56K OFF)
          (21 TDC 56K OFF)(22 TDC 56K OFF)(23 TDC 56K OFF)
          (24 TDC 56K OFF)(25 TDC 56K OFF)(26 TDC 56K OFF)
          (27 TDC 56K OFF)(28 TDC 56K OFF)(29 TDC 56K OFF)
                        (30 TDC 56K OFF)(31 TDC 56K OFF)
```

TOPS Increased Multiplexing (continued)

The following MAP example for table TDCDEF with datafill for cutting over to 16-position TPC without ORDB

```
 ISGNO                                                    TDCTAB
_____________________________________________________________________
0
    (1 NILPROT)(2 NILPROT)(3 NILPROT)(4 NILPROT)(5 NILPROT)
   (6 NILPROT)(7 NILPROT)(8 NILPROT)(9 NILPROT)(10 NILPROT)
          (11 NILPROT)(12 NILPROT)(13 NILPROT)(14 NILPROT)
          (11 NILPROT)(12 NILPROT)(13 NILPROT)(14 NILPROT)
          (15 NILPROT)(16 NILPROT)(17 NILPROT)(18 NILPROT)
          (19 NILPROT)(20 NILPROT)(21 NILPROT)(22 NILPROT)
          (23 NILPROT)(24 NILPROT)(25 NILPROT)(26 NILPROT)
         (27 NILPROT)(28 NILPROT)(29 X25DCEL TPC 100 MPX16)
       (30 X25DCEL TPC 201 MPX16)(31 X25DCEL TPC 102 MPX16)
1
    (1 NILPROT)(2 NILPROT)(3 NILPROT)(4 NILPROT)(5 NILPROT)
   (6 NILPROT)(7 NILPROT)(8 NILPROT)(9 NILPROT)(10 NILPROT)
          (11 NILPROT)(12 NILPROT)(13 NILPROT)(14 NILPROT)
          (15 NILPROT)(16 NILPROT)(17 NILPROT)(18 NILPROT)
          (19 NILPROT)(20 NILPROT)(21 NILPROT)(22 NILPROT)
          (23 NILPROT)(24 NILPROT)(25 NILPROT)(26 NILPROT)
         (27 NILPROT)(28 NILPROT)(29 X25DCEL TPC 105 MPX16)
       (30 X25DCEL TPC 202 MPX16)(31 X25DCEL TPC 203 MPX16)
2
    (1 NILPROT)(2 NILPROT)(3 NILPROT)(4 NILPROT)(5 NILPROT)
   (6 NILPROT)(7 NILPROT)(8 NILPROT)(9 NILPROT)(10 NILPROT)
          (11 NILPROT)(12 NILPROT)(13 NILPROT)(14 NILPROT)
          (15 NILPROT)(16 NILPROT)(17 NILPROT)(18 NILPROT)
          (19 NILPROT)(20 NILPROT)(21 NILPROT)(22 NILPROT)
          (23 NILPROT)(24 NILPROT)(25 NILPROT)(26 NILPROT)
         (27 NILPROT)(28 NILPROT)(29 X25DCEL TPC 200 MPX16)
       (30 X25DCEL TPC 103 MPX16)(31 X25DCEL TPC 204 MPX16)
3
    (1 NILPROT)(2 NILPROT)(3 NILPROT)(4 NILPROT)(5 NILPROT)
   (6 NILPROT)(7 NILPROT)(8 NILPROT)(9 NILPROT)(10 NILPROT)
          (11 NILPROT)(12 NILPROT)(13 NILPROT)(14 NILPROT)
          (15 NILPROT)(16 NILPROT)(17 NILPROT)(18 NILPROT)
          (19 NILPROT)(20 NILPROT)(21 NILPROT)(22 NILPROT)
          (23 NILPROT)(24 NILPROT)(25 NILPROT)(26 NILPROT)
        (27 NILPROT)(28 NILPROT)(29 X25DCEL TPC 101 MPX16)
       (30 X25DCEL TPC 104 MPX16)(31 X25DCEL TPC 205 MPX16)
       (30 X25DCEL TPC 104 MPX16)(31 X25DCEL TPC 205 MPX16)
```

TOPS Increased Multiplexing (continued)

The following MAP example for table SPECCONN with datafill for cutting over to 16-position TPC without ORDB

```
ENDPT1           ENDPT2                  CONTYPE    STATUS
_____________________________________________________________
 * TPC 100 MPX16 and TPC 200 MPX16 *
DCHCHNL   0 29   DS1   TMS   0  0  1   CON        ACTIVE
DCHCHNL   2 29   DS1   TMS   0  0  2   CON        ACTIVE
 * TPC 101 MPX16 and TPC 201 MPX16 *
 DCHCHNL   3 29   DS1   TMS   0  1  1   CON        ACTIVE
DCHCHNL   0 30   DS1   TMS   0  1  2   CON        ACTIVE
 * TPC 102 MPX16 and TPC 202 MPX16 *
 DCHCHNL   0 31   DS1   TMS   0  2  1   CON        ACTIVE
 DCHCHNL   1 30   DS1   TMS   0  2  2   CON        ACTIVE
 * TPC 103 MPX16 and TPC 203 MPX16 *
 DCHCHNL   2 30   DS1   TMS   0  3  1   CON        ACTIVE
 DCHCHNL   1 31   DS1   TMS   0  3  2   CON        ACTIVE
 * TPC 104 MPX16 and TPC 204 MPX16 *
 DCHCHNL   3 30   DS1   TMS   0  4  1   CON        ACTIVE
 DCHCHNL   2 31   DS1   TMS   0  4  2   CON        ACTIVE
  * TPC 105 MPX16 and TPC 205 MPX16 *
DCHCHNL   1 29   DS1   TMS   0  5  1   CON        ACTIVE
DCHCHNL   3 31   DS1   TMS   0  5  2   CON        ACTIVE
```

Adding TMS ORDB to TMS with 16-position TPCs To connect a complete TMS to ORDB, BSY the TMS. Add or change the following datafill:

- PVCTYPE
- TMSPVC
- TDCDEF
- TMSPSDEV
- SPECCONN

Establish a connection to the ORDB database. Return the TMS to service.

Procedure for connecting each 16-position TPC of an INSV TMS separately to the ORDB database

Use the following procedure to provide each 16-position TPC of an INSV TMS with a separate connection to the ORDB database:

1 Add configuration type CGI16 to table PVCTYPE.

2 Define primary and secondary links to the ORDB database in table TMSPSDEV.

3 Add TMSPVC datafill that defines direct and inter-DCH ORDB links.

TOPS Increased Multiplexing (continued)

4 Add TDCDEF datafill for direct and inter-DCH ORDB links.

5 Add SPECCONN datafill for connections for direct and inter-DCH ORDB links.

6 Delete SPECCONN datafill for primary and secondary links to the TPC that connects to ORDB. For example, TPC 100 MPX16 and TPC 200 MPX16, or TPC 101 MPX16 and TPC 201 MPX16.

> ***Note:*** OFFL the TPC and the associated ISG channels of the TPC to remove SPECCONN datafill.

7 Assign NILPROT to the TDCDEF Channel Data for primary and secondary links that you removed earlier from SPECCONN.

8 Change TMSPVC datafill for primary and secondary links that you removed earlier from SPECCONN. The datafill for the links updated to define the connection to the ORDB database appears in the example for table TMSPVC.

9 Add TDCDEF datafill that corresponds to primary and secondary links updated in TMSPVC. To perform this action, replace the datafill that you change to NILPROT. The datafill you need for each TPC primary and secondary data links appears in the example for table TCDDEF.

10 Add SPECCONN datafill for primary and secondary data links. To perform this action, replace the datafill you remove. The datafill for the primary and secondary data links of each TPC appears in the example for table SPECCONN.

11 Repeat the last 5 steps for each TPC you connect to ORDB.

The following MAP example for table PVCTYPE with datafill for adding ORDB to 16-position TPCs

```
VALUE                                    SYMBOL
_______________________________________________________
   8                                     CGI16
```

TOPS Increased Multiplexing (continued)

The following MAP example for table TMSPVC with datafill for adding ORDB to 16-position TPCs

```
PVCKEY                                                          PVCTAB
_____________________________________________________________________
 * Inter-DCH link definitions *
ORDB 223 CGI16   (17 TPC 200 MPX16 0)(17 TPC 103 MPX16 3)
ORDB 232 CGI16  (17 ORDB 133 CGI16 0)(17 ORDB 133 CGI16 3)
ORDB 210 CGI16   (17 TPC 203 MPX16 3)(17 TPC 105 MPX16 5)
ORDB 201 CGI16  (17 ORDB 100 CGI16 3)(17 ORDB 100 CGI16 5)
ORDB 213 CGI16                        (17 TPC 202 MPX16 2)
ORDB 231 CGI16                        (17 ORDB 133 CGI16 2)
ORDB 220 CGI16                        (17 TPC 204 MPX16 4)
ORDB 202 CGI16                       (17 ORDB 100 CGI16 4)
             * Direct ORDB Database link definitions *
ORDB 100 CGI16   (17 TPC 100 MPX16 0)(17 TPC 201 MPX16 1)
                  (17 TPC 102 MPX16 2)(17 ORDB 201 CGI16 3)
                 (17 ORDB 202 CGI16 4)(17 ORDB 201 CGI16 5)
ORDB 133 CGI16   (17 ORDB 232 CGI16 0)(17 TPC 101 MPX16 1)
                 (17 ORDB 231 CGI16 2)(17 ORDB 232 CGI16 3)
                   (17 TPC 104 MPX16 4)(17 TPC 205 MPX16 5)
TPC  100 MPX16               (1 CC 0 DMS 0)(16 CC 0 DMS 1)
                                      (17 ORDB 100 CGI16 0)
TPC  200 MPX16                (1 CC 0 DMS 0)(16 CC 0 DMS 1)
                                      (17 ORDB 223 CGI16 0)
TPC  101 MPX16               (1 CC 0 DMS 0)(16 CC 0 DMS 1)
                                      (17 ORDB 133 CGI16 1)
TPC  201 MPX16               (1 CC 0 DMS 0)(16 CC 0 DMS 1)
                                      (17 ORDB 100 CGI16 1)
TPC  102 MPX16                (1 CC 0 DMS 0)(16 CC 0 DMS 1)
                                      (17 ORDB 100 CGI16 2)
TPC  202 MPX16               (1 CC 0 DMS 0)(16 CC 0 DMS 1)
                                      (17 ORDB 213 CGI16 2)
TPC  103 MPX16                (1 CC 0 DMS 0)(16 CC 0 DMS 1)
                                       (17 ORDB 223 CGI16 3
TPC  203 MPX16                (1 CC 0 DMS 0)(16 CC 0 DMS 1)
                                       (17 ORDB 210 CGI16 3
TPC  104 MPX16                (1 CC 0 DMS 0)(16 CC 0 DMS 1)
                                      (17 ORDB 133 CGI16 4)
TPC  204 MPX16                (1 CC 0 DMS 0)(16 CC 0 DMS 1)
                                      (17 ORDB 220 CGI16 4)
TPC  105 MPX16                (1 CC 0 DMS 0)(16 CC 0 DMS 1)
                                      (17 ORDB 210 CGI16 5)
TPC  205 MPX16                (1 CC 0 DMS 0)(16 CC 0 DMS 1)
                                      (17 ORDB 133 CGI16 5)
```

TOPS Increased Multiplexing (continued)

The following MAP example for table TMSPSDEV with datafill for adding ORDB to 16-position TPCs

```
   DEVNAME     TMSNO                  CKTTAB
 ____________________________________________________________
   ORDB 1      0                      7 CHNLS (1)
   ORDB 2      0                      9 CHNLS (1)
   ORDB 10     0                     10 CHNLS (1)(2)(3)(4)
   ORDB 11     0                     11 CHNLS (1)(2)(3)(4)
```

The following MAP example for table TDCDEF with datafill for adding ORDB to 16-position TPCs

```
ENDPT1           ENDPT2                 CONTYPE    STATUS
 ____________________________________________________________
   * Direct ORDB Database connections *
  DCHCHNL   0  3   DS1   TMS   0  7  1   CON      ACTIVE
  DCHCHNL   3  3   DS1   TMS   0  9  1   CON      ACTIVE
   * Inter-DCH link connections *
  DCHCHNL   0  7   DS1   TMS   0 11  1   CON      ACTIVE
  DCHCHNL   1  7   DS1   TMS   0 10  1   CON      ACTIVE
  DCHCHNL   0 11   DS1   TMS   0 11  2   CON      ACTIVE
  DCHCHNL   2 11   DS1   TMS   0 10  2   CON      ACTIVE
  DCHCHNL   1 11   DS1   TMS   0 11  3   CON      ACTIVE
  DCHCHNL   3 11   DS1   TMS   0 10  3   CON      ACTIVE
  DCHCHNL   2  7   DS1   TMS   0 11  4   CON      ACTIVE
  DCHCHNL   3  7   DS1   TMS   0 10  4   CON      ACTIVE
   * TPC 100 MPX16 and TPC 200 MPX16 *
  DCHCHNL   0 29   DS1   TMS   0  0  1   CON      ACTIVE
  DCHCHNL   2 29   DS1   TMS   0  0  2   CON      ACTIVE
   * TPC 101 MPX16 and TPC 201 MPX16 *
  DCHCHNL   3 29   DS1   TMS   0  1  1   CON      ACTIVE
  DCHCHNL   0 30   DS1   TMS   0  1  2   CON      ACTIVE
   * TPC 102 MPX16 and TPC 202 MPX16 *
  DCHCHNL   0 31   DS1   TMS   0  2  1   CON      ACTIVE
  DCHCHNL   1 30   DS1   TMS   0  2  2   CON      ACTIVE
   * TPC 103 MPX16 and TPC 203 MPX16 *
  DCHCHNL   2 30   DS1   TMS   0  3  1   CON      ACTIVE
  DCHCHNL   1 31   DS1   TMS   0  3  2   CON      ACTIVE
   * TPC 104 MPX16 and TPC 204 MPX16 *
  DCHCHNL   3 30   DS1   TMS   0  4  1   CON      ACTIVE
  DCHCHNL   2 31   DS1   TMS   0  4  2   CON      ACTIVE
   * TPC 105 MPX16 and TPC 205 MPX16 *
  DCHCHNL   1 29   DS1   TMS   0  5  1   CON      ACTIVE
  DCHCHNL   3 31   DS1   TMS   0  5  2   CON      ACTIVE
```

TOPS Increased Multiplexing (continued)

The following MAP example for table SPECCONN with datafill for adding ORDB to 16-position TPCs

```
ENDPT1           ENDPT2                  CONTYPE     STATUS
_____________________________________________________________
   * Direct ORDB Database connections *
  DCHCHNL   0  3   DS1   TMS   0  7  1   CON       ACTIVE
  DCHCHNL   3  3   DS1   TMS   0  9  1   CON       ACTIVE
   * Inter-DCH link connections *
  DCHCHNL   0  7   DS1   TMS   0 11  1   CON       ACTIVE
  DCHCHNL   1  7   DS1   TMS   0 10  1   CON       ACTIVE
  DCHCHNL   0 11   DS1   TMS   0 11  2   CON       ACTIVE
  DCHCHNL   2 11   DS1   TMS   0 10  2   CON       ACTIVE
  DCHCHNL   1 11   DS1   TMS   0 11  3   CON       ACTIVE
  DCHCHNL   3 11   DS1   TMS   0 10  3   CON       ACTIVE
  DCHCHNL   2  7   DS1   TMS   0 11  4   CON       ACTIVE
  DCHCHNL   3  7   DS1   TMS   0 10  4   CON       ACTIVE
   * TPC 100 MPX16 and TPC 200 MPX16 *
  DCHCHNL   0 29   DS1   TMS   0  0  1   CON       ACTIVE
  DCHCHNL   2 29   DS1   TMS   0  0  2   CON       ACTIVE
   * TPC 101 MPX16 and TPC 201 MPX16 *
  DCHCHNL   3 29   DS1   TMS   0  1  1   CON       ACTIVE
  DCHCHNL   0 30   DS1   TMS   0  1  2   CON       ACTIVE
   * TPC 102 MPX16 and TPC 202 MPX16 *
  DCHCHNL   0 31   DS1   TMS   0  2  1   CON       ACTIVE
  DCHCHNL   1 30   DS1   TMS   0  2  2   CON       ACTIVE
   * TPC 103 MPX16 and TPC 203 MPX16 *
  DCHCHNL   2 30   DS1   TMS   0  3  1   CON       ACTIVE
  DCHCHNL   1 31   DS1   TMS   0  3  2   CON       ACTIVE
   * TPC 104 MPX16 and TPC 204 MPX16 *
  DCHCHNL   3 30   DS1   TMS   0  4  1   CON       ACTIVE
  DCHCHNL   2 31   DS1   TMS   0  4  2   CON       ACTIVE
   * TPC 105 MPX16 and TPC 205 MPX16 *
  DCHCHNL   1 29   DS1   TMS   0  5  1   CON       ACTIVE
  DCHCHNL   3 31   DS1   TMS   0  5  2   CON       ACTIVE
```

Cutting over to 16-position TPCs to TMS with ORDB For this detailed process, the TMS(s) that you convert must have the TMS datafill that appears in the latest version of *Translations Application Bulletin (TAB)* 900203, TMS Configuration and Datafill. Package TOPS DA Subtending TMS, OSB00101, in this manual provides this document.

This process updates ORDB links. This action allows the links to communicate with TPCs that handle different numbers of position. Remove from service and update primary and secondary ORDB links at the same time.

TOPS Increased Multiplexing (continued)

This action causes the loss of ORDB services for TPCs that remain in service until you update and RTS the links.

This process requires you to convert the 4-position TPCs in a specified order. The following guidelines require you to use:

- datafill for TPC-A for conversion to the first 16-position
- datafill for TPC-B for conversion to the second 16-position TPC
- datafill for TPC-C for conversion to the third 16-position TPC
- datafill for TPC-D for conversion to the fourth 16-position TPC
- datafill for TPC-E for conversion to the fifth 16-position TPC
- datafill for TPC-F for conversion to the sixth 16-position TPC

This document provides the datafill for each TPC after the guidelines.

Use fixed ordering because of the requirement of detailed datafill changes for each TPC. Use the following guidelines and datafill to cut over from an STD configuration of 4 positions for each TPC with ORDB. Cut over to an MPX configuration of 16 positions for each TPC with ORDB:

Note: To convert from one configuration to another, create new TMSPVC datafill and alter TDCDEF datafill. For example, follow this process to convert from STD to MPX16. These changes provide an adjustable set of datafill that you can alter from each step in the conversion process.

You can use the STD configuration datafill to create a set of TMSPVC TRANS (transition) datafill. The following changes apply:

- do not have DA PVCs
- the correct entry order for the datafill is as follows:
  - — CC MTC PVC
  - — CC Call Processing PVCs
  - — ORDB PVCs
- substitute configuration type TRANS for STD (for TPC entries) and CGI4 (for ORDB entries)
- create a duplicate set of TPC entries 200-223. These entries are the same as the TPC 150-173 TRANS entries.

  Note: Conversion from 4-position to 16-position clusters for each TPC requires TPC entries 200-223. The datafill guidelines for table TMSPVC specify this conversion.

TOPS Increased Multiplexing (continued)

To make TDCDEF changes, change each link in TDCDEF for the TMS converted to configuration type TRANS. Before conversion begins, change each STD and CGI4 in TDCDEF to TRANS for the converted TMS.

Note: The removal of DCH channels assigned to DA links occurs (channel data = NILPROT). The TDCDEF allows the change of field CONFIG from TRANS or to TRANS. You can perform this action even if the associated DCH channel is entered in SPECCONN.

The TMSPVC and TDCDEF TRANS beginning sets of datafill appear in the following examples.

TOPS Increased Multiplexing (continued)

MAP example for table TMSPVC TRANS showing beginning set of datafill

```
PVCKEY                                                          PVCTAB
_____________________________________________________________________
ORDB 213 TRANS      (5 TPC 150 TRANS 0)(5 TPC 153 TRANS 3)
                    (5 TPC 106 TRANS 6)(5 TPC 107 TRANS 7)
                   (5 TPC 109 TRANS 9)(5 TPC 166 TRANS 16)
ORDB 231 TRANS    (5 ORDB 133 TRANS 0)(5 ORDB 133 TRANS 3)
                   (5 ORDB 133 TRANS 6)(5 ORDB 133 TRANS 7)
                  (5 ORDB 133 TRANS 9)(5 ORDB 133 TRANS 16)
ORDB 223 TRANS      (5 TPC 151 TRANS 1)(5 TPC 154 TRANS 4)
                   (5 TPC 160 TRANS 10)(5 TPC 112 TRANS 12)
                   (5 TPC 113 TRANS 13)(5 TPC 115 TRANS 15)
ORDB 232 TRANS    (5 ORDB 133 TRANS 1)(5 ORDB 133 TRANS 4)
                 (5 ORDB 133 TRANS 10)(5 ORDB 133 TRANS 12)
                 (5 ORDB 133 TRANS 13)(5 ORDB 133 TRANS 15)
ORDB 210 TRANS     (5 TPC 108 TRANS 8)(5 TPC 110 TRANS 10)
                   (5 TPC 111 TRANS 11)(5 TPC 163 TRANS 13)
                   (5 TPC 169 TRANS 19)(5 TPC 172 TRANS 22)
ORDB 201 TRANS   (5 ORDB 100 TRANS 8)(5 ORDB 100 TRANS 10)
                 (5 ORDB 100 TRANS 11)(5 ORDB 100 TRANS 13)
                 (5 ORDB 100 TRANS 19)(5 ORDB 100 TRANS 22)
ORDB 220 TRANS     (5 TPC 157 TRANS 7)(5 TPC 114 TRANS 14)
                   (5 TPC 116 TRANS 16)(5 TPC 117 TRANS 17)
                   (5 TPC 170 TRANS 20)(5 TPC 173 TRANS 23)
ORDB 202 TRANS   (5 ORDB 100 TRANS 7)(5 ORDB 100 TRANS 14)
                 (5 ORDB 100 TRANS 16)(5 ORDB 100 TRANS 17)
                 (5 ORDB 100 TRANS 20)(5 ORDB 100 TRANS 23)
ORDB 100 TRANS      (5 TPC 100 TRANS 0)(5 TPC 101 TRANS 1)
                    (5 TPC 102 TRANS 2)(5 TPC 103 TRANS 3)
                    (5 TPC 104 TRANS 4)(5 TPC 105 TRANS 5)
                   (5 TPC 156 TRANS 6)(5 ORDB 202 TRANS 7)
                   (5 ORDB 201 TRANS 8)(5 TPC 159 TRANS 9)
                 (5 ORDB 201 TRANS 10)(5 ORDB 201 TRANS 11)
                  (5 TPC 162 TRANS 12)(5 ORDB 201 TRANS 13)
                  (5 ORDB 202 TRANS 14)(5 TPC 165 TRANS 15)
                 (5 ORDB 202 TRANS 16)(5 ORDB 202 TRANS 17)
                  (5 TPC 168 TRANS 18)(5 ORDB 201 TRANS 19)
                  (5 ORDB 202 TRANS 20)(5 TPC 171 TRANS 21)
                 (5 ORDB 201 TRANS 22)(5 ORDB 202 TRANS 23)
```

TOPS Increased Multiplexing (continued)

MAP example for table TMSPVC TRANS showing the beginning set of datafill (continued)

```
PVCKEY                                                          PVCTAB
_____________________________________________________________________

ORDB 133 TRANS    (5 ORDB 231 TRANS 0)(5 ORDB 232 TRANS 1)
                  (5 TPC 152 TRANS 2)(5 ORDB 231 TRANS 3)
                  (5 ORDB 232 TRANS 4)(5 TPC 155 TRANS 5)
                  (5 ORDB 231 TRANS 6)(5 ORDB 231 TRANS 7)
                   (5 TPC 158 TRANS 8)(5 ORDB 231 TRANS 9)
                 (5 ORDB 232 TRANS 10)(5 TPC 161 TRANS 11)
                (5 ORDB 232 TRANS 12)(5 ORDB 232 TRANS 13)
                 (5 TPC 164 TRANS 14)(5 ORDB 232 TRANS 15)
                 (5 ORDB 231 TRANS 16)(5 TPC 167 TRANS 17)
                  (5 TPC 118 TRANS 18)(5 TPC 119 TRANS 19)
                  (5 TPC 120 TRANS 20)(5 TPC 121 TRANS 21)
                  (5 TPC 122 TRANS 22)(5 TPC 123 TRANS 23)
TPC 100 TRANS                  (1 CC 0 DMS 0)(4 CC 0 DMS 1)
                                      (5 ORDB 100 TRANS 0)
TPC 150 TRANS                  (1 CC 0 DMS 0)(4 CC 0 DMS 1)
                                      (5 ORDB 213 TRANS 0)
TPC 200 TRANS                  (1 CC 0 DMS 0)(4 CC 0 DMS 1)
                                      (5 ORDB 213 TRANS 0)
TPC 101 TRANS                  (1 CC 0 DMS 0)(4 CC 0 DMS 1)
                                      (5 ORDB 100 TRANS 1)
TPC 151 TRANS                  (1 CC 0 DMS 0)(4 CC 0 DMS 1)
                                      (5 ORDB 223 TRANS 1)
TPC 201 TRANS                  (1 CC 0 DMS 0)(4 CC 0 DMS 1)
                                      (5 ORDB 223 TRANS 1)
TPC 102 TRANS                  (1 CC 0 DMS 0)(4 CC 0 DMS 1)
                                      (5 ORDB 100 TRANS 2)
TPC 152 TRANS                  (1 CC 0 DMS 0)(4 CC 0 DMS 1)
                                      (5 ORDB 133 TRANS 2)
TPC 202 TRANS                  (1 CC 0 DMS 0)(4 CC 0 DMS 1)
                                      (5 ORDB 133 TRANS 2)
TPC 103 TRANS                  (1 CC 0 DMS 0)(4 CC 0 DMS 1)
                                      (5 ORDB 100 TRANS 3)
TPC 153 TRANS                  (1 CC 0 DMS 0)(4 CC 0 DMS 1)
                                      (5 ORDB 213 TRANS 3)
TPC 203 TRANS                  (1 CC 0 DMS 0)(4 CC 0 DMS 1)
                                      (5 ORDB 213 TRANS 3)
TPC 104 TRANS                  (1 CC 0 DMS 0)(4 CC 0 DMS 1)
                                      (5 ORDB 100 TRANS 4)
TPC 154 TRANS                  (1 CC 0 DMS 0)(4 CC 0 DMS 1)
                                      (5 ORDB 223 TRANS 4)
```

TOPS Increased Multiplexing (continued)

MAP example for table TMSPVC TRANS showing the beginning set of datafill (continued)

```
PVCKEY                                                  PVCTAB
_____________________________________________________________
TPC 204 TRANS                  (1 CC 0 DMS 0)(4 CC 0 DMS 1)
                                     (5 ORDB 223 TRANS 4)
TPC 105 TRANS                  (1 CC 0 DMS 0)(4 CC 0 DMS 1)
                                     (5 ORDB 100 TRANS 5)
TPC 155 TRANS                  (1 CC 0 DMS 0)(4 CC 0 DMS 1)
                                     (5 ORDB 133 TRANS 5)
TPC 205 TRANS                  (1 CC 0 DMS 0)(4 CC 0 DMS 1)
                                     (5 ORDB 133 TRANS 5)
TPC 106 TRANS                  (1 CC 0 DMS 0)(4 CC 0 DMS 1)
                                     (5 ORDB 213 TRANS 6)
TPC 156 TRANS                  (1 CC 0 DMS 0)(4 CC 0 DMS 1)
                                     (5 ORDB 100 TRANS 6)
TPC 206 TRANS                  (1 CC 0 DMS 0)(4 CC 0 DMS 1)
                                     (5 ORDB 100 TRANS 6)
TPC 107 TRANS                  (1 CC 0 DMS 0)(4 CC 0 DMS 1)
                                     (5 ORDB 213 TRANS 7)
TPC 157 TRANS                  (1 CC 0 DMS 0)(4 CC 0 DMS 1)
                                     (5 ORDB 220 TRANS 7)
TPC 207 TRANS                  (1 CC 0 DMS 0)(4 CC 0 DMS 1)
                                     (5 ORDB 220 TRANS 7)
TPC 108 TRANS                  (1 CC 0 DMS 0)(4 CC 0 DMS 1)
                                     (5 ORDB 210 TRANS 8)
TPC 158 TRANS                  (1 CC 0 DMS 0)(4 CC 0 DMS 1)
                                     (5 ORDB 133 TRANS 8)
TPC 208 TRANS                  (1 CC 0 DMS 0)(4 CC 0 DMS 1)
                                     (5 ORDB 133 TRANS 8)
TPC 109 TRANS                  (1 CC 0 DMS 0)(4 CC 0 DMS 1)
                                     (5 ORDB 213 TRANS 9)
TPC 159 TRANS                  (1 CC 0 DMS 0)(4 CC 0 DMS 1)
                                     (5 ORDB 100 TRANS 9)
TPC 209 TRANS                  (1 CC 0 DMS 0)(4 CC 0 DMS 1)
                                     (5 ORDB 100 TRANS 9)
TPC 110 TRANS                  (1 CC 0 DMS 0)(4 CC 0 DMS 1)
                                    (5 ORDB 210 TRANS 10)
TPC 160 TRANS                  (1 CC 0 DMS 0)(4 CC 0 DMS 1)
                                    (5 ORDB 223 TRANS 10)
TPC 210 TRANS                  (1 CC 0 DMS 0)(4 CC 0 DMS 1)
                                    (5 ORDB 223 TRANS 10)
TPC 111 TRANS                  (1 CC 0 DMS 0)(4 CC 0 DMS 1)
                                    (5 ORDB 210 TRANS 11)
```

TOPS Increased Multiplexing (continued)

MAP example for table TMSPVC TRANS showing the beginning set of datafill (continued)

```
PVCKEY                                                  PVCTAB
_____________________________________________________________
TPC 161 TRANS                  (1 CC 0 DMS 0)(4 CC 0 DMS 1)
                                     (5 ORDB 133 TRANS 11)
TPC 211 TRANS                  (1 CC 0 DMS 0)(4 CC 0 DMS 1)
                                     (5 ORDB 133 TRANS 11)
TPC 112 TRANS                  (1 CC 0 DMS 0)(4 CC 0 DMS 1)
                                     (5 ORDB 223 TRANS 12)
TPC 162 TRANS                  (1 CC 0 DMS 0)(4 CC 0 DMS 1)
                                     (5 ORDB 100 TRANS 12)
TPC 212 TRANS                  (1 CC 0 DMS 0)(4 CC 0 DMS 1)
                                     (5 ORDB 100 TRANS 12)
TPC 113 TRANS                  (1 CC 0 DMS 0)(4 CC 0 DMS 1)
                                     (5 ORDB 223 TRANS 13)
TPC 163 TRANS                  (1 CC 0 DMS 0)(4 CC 0 DMS 1)
                                     (5 ORDB 210 TRANS 13)
TPC 213 TRANS                  (1 CC 0 DMS 0)(4 CC 0 DMS 1)
                                     (5 ORDB 210 TRANS 13)
TPC 114 TRANS                  (1 CC 0 DMS 0)(4 CC 0 DMS 1)
                                     (5 ORDB 220 TRANS 14)
TPC 164 TRANS                  (1 CC 0 DMS 0)(4 CC 0 DMS 1)
                                     (5 ORDB 133 TRANS 14)
TPC 214 TRANS                  (1 CC 0 DMS 0)(4 CC 0 DMS 1)
                                     (5 ORDB 133 TRANS 14)
TPC 115 TRANS                  (1 CC 0 DMS 0)(4 CC 0 DMS 1)
                                     (5 ORDB 223 TRANS 15)
TPC 165 TRANS                  (1 CC 0 DMS 0)(4 CC 0 DMS 1)
                                     (5 ORDB 100 TRANS 15)
TPC 215 TRANS                  (1 CC 0 DMS 0)(4 CC 0 DMS 1)
                                     (5 ORDB 100 TRANS 15)
TPC 116 TRANS                  (1 CC 0 DMS 0)(4 CC 0 DMS 1)
                                     (5 ORDB 220 TRANS 16)
TPC 166 TRANS                  (1 CC 0 DMS 0)(4 CC 0 DMS 1)
                                     (5 ORDB 213 TRANS 16)
TPC 216 TRANS                  (1 CC 0 DMS 0)(4 CC 0 DMS 1)
                                     (5 ORDB 213 TRANS 16)
TPC 117 TRANS                  (1 CC 0 DMS 0)(4 CC 0 DMS 1)
                                     (5 ORDB 220 TRANS 17)
TPC 167 TRANS                  (1 CC 0 DMS 0)(4 CC 0 DMS 1)
                                     (5 ORDB 133 TRANS 17)
TPC 217 TRANS                  (1 CC 0 DMS 0)(4 CC 0 DMS 1)
                                     (5 ORDB 133 TRANS 17)
```

TOPS Increased Multiplexing (continued)

MAP example for table TMSPVC TRANS showing the beginning set of datafill (continued)

```
PVCKEY                                                  PVCTAB
_____________________________________________________________
TPC 118 TRANS                  (1 CC 0 DMS 0)(4 CC 0 DMS 1)
                                     (5 ORDB 133 TRANS 18)
TPC 168 TRANS                  (1 CC 0 DMS 0)(4 CC 0 DMS 1)
                                     (5 ORDB 100 TRANS 18)
TPC 218 TRANS                  (1 CC 0 DMS 0)(4 CC 0 DMS 1)
                                     (5 ORDB 100 TRANS 18)
TPC 119 TRANS                  (1 CC 0 DMS 0)(4 CC 0 DMS 1)
                                     (5 ORDB 133 TRANS 19)
TPC 169 TRANS                  (1 CC 0 DMS 0)(4 CC 0 DMS 1)
                                    (5 ORDB 210 TRANS 19)
TPC 219 TRANS                  (1 CC 0 DMS 0)(4 CC 0 DMS 1)
                                     (5 ORDB 210 TRANS 19)
TPC 120 TRANS                  (1 CC 0 DMS 0)(4 CC 0 DMS 1)
                                     (5 ORDB 133 TRANS 20)
TPC 170 TRANS                  (1 CC 0 DMS 0)(4 CC 0 DMS 1)
                                     (5 ORDB 220 TRANS 20)
TPC 220 TRANS                  (1 CC 0 DMS 0)(4 CC 0 DMS 1)
                                     (5 ORDB 220 TRANS 20)
TPC 121 TRANS                  (1 CC 0 DMS 0)(4 CC 0 DMS 1)
                                     (5 ORDB 133 TRANS 21)
TPC 171 TRANS                  (1 CC 0 DMS 0)(4 CC 0 DMS 1)
                                     (5 ORDB 100 TRANS 21)
TPC 221 TRANS                  (1 CC 0 DMS 0)(4 CC 0 DMS 1)
                                     (5 ORDB 100 TRANS 21)
TPC 122 TRANS                  (1 CC 0 DMS 0)(4 CC 0 DMS 1)
                                     (5 ORDB 133 TRANS 22)
TPC 172 TRANS                  (1 CC 0 DMS 0)(4 CC 0 DMS 1)
                                     (5 ORDB 210 TRANS 22)
TPC 222 TRANS                  (1 CC 0 DMS 0)(4 CC 0 DMS 1)
                                     (5 ORDB 210 TRANS 22)
TPC 123 TRANS                  (1 CC 0 DMS 0)(4 CC 0 DMS 1)
                                     (5 ORDB 133 TRANS 23)
TPC 173 TRANS                  (1 CC 0 DMS 0)(4 CC 0 DMS 1)
                                     (5 ORDB 220 TRANS 23)
TPC 223 TRANS                  (1 CC 0 DMS 0)(4 CC 0 DMS 1)
                                     (5 ORDB 220 TRANS 23)
```

TOPS Increased Multiplexing (continued)

MAP example for table TDCDEF TRANS showing the beginning set of datafill

```
ISGNO                                                          TDCTAB
_____________________________________________________________________
0
        (1 X25DCEL TPC 100 TRANS)(2 X25DCEL TPC 103 TRANS)
                    (3 X25DCEL ORDB 100 TRANS)(4 NILPROT)
        (5 X25DCEL TPC 101 TRANS)(6 X25DCEL TPC 104 TRANS)
                    (7 X25DCEL ORDB 201 TRANS)(8 NILPROT)
       (9 X25DCEL TPC 102 TRANS)(10 X25DCEL TPC 105 TRANS)
                   (11 X25DCEL ORDB 202 TRANS)(12 NILPROT)
      (13 X25DCEL TPC 159 TRANS)(14 X25DCEL TPC 156 TRANS)
        (15 NILPROT)(16 NILPROT)(17 X25DCEL TPC 165 TRANS)
        (18 X25DCEL TPC 162 TRANS)(19 NILPROT)(20 NILPROT)
       (21 X25DCEL TPC 171 TRANS)(22 X25DCEL TPC 168 TRANS)
                     (23 NILPROT)(24 NILPROT)(25 NILPROT)
                     (26 NILPROT)(27 NILPROT)(28 NILPROT)
                     (29 NILPROT)(30 NILPROT)(31 NILPROT)
1
        (1 X25DCEL TPC 106 TRANS)(2 X25DCEL TPC 109 TRANS)
           (3 NILPROT)(4 NILPROT)(5 X25DCEL TPC 107 TRANS)
       (6 X25DCEL TPC 110 TRANS)(7 X25DTEL ORDB 210 TRANS)
                    (8 NILPROT)(9 X25DCEL TPC 108 TRANS)
     (10 X25DCEL TPC 111 TRANS)(11 X25DTEL ORDB 213 TRANS)
                   (12 NILPROT)(13 X25DCEL TPC 153 TRANS)
        (14 X25DCEL TPC 150 TRANS)(15 NILPROT)(16 NILPROT)
      (17 X25DCEL TPC 166 TRANS)(18 X25DCEL TPC 163 TRANS)
        (19 NILPROT)(20 NILPROT)(21 X25DCEL TPC 172 TRANS)
        (22 X25DCEL TPC 169 TRANS)(23 NILPROT)(24 NILPROT)
          (25 NILPROT)(26 NILPROT)(27 NILPROT)(28 NILPROT)
                     (29 NILPROT)(30 NILPROT)(31 NILPROT)
2
        (1 X25DCEL TPC 112 TRANS)(2 X25DCEL TPC 115 TRANS)
           (3 NILPROT)(4 NILPROT)(5 X25DCEL TPC 113 TRANS)
       (6 X25DCEL TPC 116 TRANS)(7 X25DTEL ORDB 223 TRANS)
                    (8 NILPROT)(9 X25DCEL TPC 114 TRANS)
     (10 X25DCEL TPC 117 TRANS)(11 X25DTEL ORDB 220 TRANS)
                   (12 NILPROT)(13 X25DCEL TPC 154 TRANS)
        (14 X25DCEL TPC 151 TRANS)(15 NILPROT)(16 NILPROT)
      (17 X25DCEL TPC 160 TRANS)(18 X25DCEL TPC 157 TRANS)
       (19 NILPROT)(20 NILPROT)(21 X25DCEL TPC 173 TRANS)
       (22 X25DCEL TPC 170 TRANS)(23 NILPROT)(24 NILPROT)
         (25 NILPROT)(26 NILPROT)(27 NILPROT)(28 NILPROT)
                    (29 NILPROT)(30 NILPROT)(31 NILPROT)
```

MAP example for table TDCDEF TRANS showing the beginning set of datafill (continued)

```
ISGNO                                                          TDCTAB
_____________________________________________________________________

3
      (1 X25DCEL TPC 118 TRANS)(2 X25DCEL TPC 121 TRANS)
                  (3 X25DCEL ORDB 133 TRANS)(4 NILPROT)
      (5 X25DCEL TPC 119 TRANS)(6 X25DCEL TPC 122 TRANS)
                  (7 X25DCEL ORDB 232 TRANS)(8 NILPROT)
     (9 X25DCEL TPC 120 TRANS)(10 X25DCEL TPC 123 TRANS)
                (11 X25DCEL ORDB 231 TRANS)(12 NILPROT)
    (13 X25DCEL TPC 155 TRANS)(14 X25DCEL TPC 152 TRANS)
      (15 NILPROT)(16 NILPROT)(17 X25DCEL TPC 161 TRANS)
      (18 X25DCEL TPC 158 TRANS)(19 NILPROT)(20 NILPROT)
    (21 X25DCEL TPC 167 TRANS)(22 X25DCEL TPC 164 TRANS)
                   (23 NILPROT)(24 NILPROT)(25 NILPROT)
                   (26 NILPROT)(27 NILPROT)(28 NILPROT)
                   (29 NILPROT)(30 NILPROT)(31 NILPROT)
```

Steps for converting each TPC

The following procedure lists the steps to convert each TPC:

1 Determine 4 TPCs/16 positions on the same DS-1.

2 Offline TPCs and ISG channels that correspond to the TPC and ORDB links that must be updated.

3 Remove SPECCONN connections. After the TPCs and positions are removed, the system frees a DS-1. This DS-1 is in use to datafill the 16-position TPC and the associated positions.

Note: Upgrade to 16-position TPCs in the order TPC-A to TPC-F. Correct datafill for each 16-position TPC (A-F) that these steps refer to appears at the end of the conversion steps.

4 The NILPROT TDCDEF channel data datafill for connections that you removed in step 2. This action allows you to change TMSPVC tuples.

5 Delete the 16 operator positions from TOPSPOS. The four 4-position TPCs that are converted to 16-position TPC control these TOPSPOS.

6 Delete the four 4-position TPCs you OFFL in step 2.

7 Add the 16-position TPC to table TPCINV. For example, TPC 0, TPC 1.

8 Add 16 positions to table TOPSPOS. Place the positions under the addition of the 16-position TPC.

9 Reconfigure the data/hardware of the Terminal Position Controller to control 16 Operator Positions.

10 Alter PVC layouts to define 16-position configurations. To perform this action, make the TMSPVC datafill changes that the following section specifies.

TOPS Increased Multiplexing (continued)

Perform these changes for the converted TPC. For example, TPC-A and TPC-B.

11 Add the required TDCDEF datafill for each TPC. For example, TPC-A and TPC-B. This addition builds TPC connections and updated ORDB connections again.

12 Add SPECCONN datafill for each TPC. For example, TPC-A and TPC-B.

13 RTS the TPC links and ORDB links.

14 Repeat all steps for each of the six 16-position TPCs. Start at step 2.

After you configure the six TPCs, the TRANS type PVC layout must be the same as the MPX16/CGI16 type PVC layout. Update the channel data for each DCH channel in table TDCDEF to the MPX16/CGI16 PVC type. To perform this action, use the same steps for conversion used from the STD type to the TRANS type. Convert configuration type of TRANS to MPX16 for TPC PVCs and to CGI16 for ORDB PVCs.

If you must convert another TMS to the 16-position TPC type, change the TRANS type TMSPVC datafill. The datafill must appear like the 4-position TPC STD configuration type datafill without DA PVCs. To perform this action, copy STD datafill and replace STD and CGI4 configuration types with TRANS. Do not copy DA datafill. This change provides the adjustable base from which to convert the TMS datafill. After you complete these actions, return to step 3.

Datafill for TPC-A (1st TPC converted)

The datafill for TPC-A is as follows:

1 For the following specified links, OFFL the TPCs and ISG channels. Remove the SPECCONN connections:

- TPC: 100, 150, 106, 156, 112, 162, 118, 168
- ORDB: 100, 133, 213, 231, 223, 232.

2 Delete the 16 operator positions from table TOPSPOS. The TPCs 0, 1, 2, and 3 control these positions.

3 Delete TPCs 0, 1, 2, and 3 from TPCINV.

4 Add the 16-position TPC (TPC 0) to table TPCINV.

5 Change TRANS TMSPVC datafill to resemble the following table TMSPVC datafill example.

6 Add TDCDEF datafill for the following links:

- TPC: 100, 200
- ORDB: 100, 133, 213, 231, 223, 232

7 Add the SPECCONN datafill.

TOPS Increased Multiplexing (continued)

The following MAP example for table TMSPVC with datafill for cutting over to 16-position TPC-A with ORDB

```
 PVCKEY                                                          PVCTAB
_____________________________________________________________________
ORDB 213 TRANS     (5 TPC 153 TRANS 3)(5 TPC 107 TRANS 7)
                    (5 TPC 109 TRANS 9)(5 TPC 166 TRANS 16)
ORDB 231 TRANS    (5 ORDB 133 TRANS 3)(5 ORDB 133 TRANS 7)
                   (5 ORDB 133 TRANS 9)(5 ORDB 133 TRANS 16)
ORDB 223 TRANS                        (17 TPC 200 TRANS 0)
                      (5 TPC 151 TRANS 1)(5 TPC 154 TRANS 4)
                    (5 TPC 160 TRANS 10)(5 TPC 113 TRANS 13)
                                        (5 TPC 115 TRANS 15)
ORDB 232 TRANS                        (17 ORDB 133 TRANS 0)
                     (5 ORDB 133 TRANS 1)(5 ORDB 133 TRANS 4)
                   (5 ORDB 133 TRANS 10)(5 ORDB 133 TRANS 13)
                                       (5 ORDB 133 TRANS 15)
ORDB 210 TRANS     (5 TPC 108 TRANS 8)(5 TPC 110 TRANS 10)
                    (5 TPC 111 TRANS 11)(5 TPC 163 TRANS 13)
                    (5 TPC 169 TRANS 19)(5 TPC 172 TRANS 22)
ORDB 201 TRANS    (5 ORDB 100 TRANS 8)(5 ORDB 100 TRANS 10)
                  (5 ORDB 100 TRANS 11)(5 ORDB 100 TRANS 13)
                  (5 ORDB 100 TRANS 19)(5 ORDB 100 TRANS 22)
ORDB 220 TRANS     (5 TPC 157 TRANS 7)(5 TPC 114 TRANS 14)
                    (5 TPC 116 TRANS 16)(5 TPC 117 TRANS 17)
                    (5 TPC 170 TRANS 20)(5 TPC 173 TRANS 23)
ORDB 202 TRANS    (5 ORDB 100 TRANS 7)(5 ORDB 100 TRANS 14)
                  (5 ORDB 100 TRANS 16)(5 ORDB 100 TRANS 17)
                  (5 ORDB 100 TRANS 20)(5 ORDB 100 TRANS 23)
ORDB 100 TRANS     (17 TPC 100 TRANS 0)(5 TPC 101 TRANS 1)
                    (5 TPC 102 TRANS 2)(5 TPC 103 TRANS 3)
                    (5 TPC 104 TRANS 4)(5 TPC 105 TRANS 5)
                                       (5 ORDB 202 TRANS 7)
                     (5 ORDB 201 TRANS 8)(5 TPC 159 TRANS 9)
                   (5 ORDB 201 TRANS 10)(5 ORDB 201 TRANS 11)
                                       (5 ORDB 201 TRANS 13)
                    (5 ORDB 202 TRANS 14)(5 TPC 165 TRANS 15)
                   (5 ORDB 202 TRANS 16)(5 ORDB 202 TRANS 17)
                                       (5 ORDB 201 TRANS 19)
                    (5 ORDB 202 TRANS 20)(5 TPC 171 TRANS 21)
                   (5 ORDB 201 TRANS 22)(5 ORDB 202 TRANS 23)
```

TOPS Increased Multiplexing (continued)

The following MAP example for table TMSPVC with datafill for cutting over to 16-position TPC-A with ORDB (continued)

```
 PVCKEY                                                          PVCTAB
_____________________________________________________________________
ORDB 133 TRANS   (17 ORDB 232 TRANS 0)(5 ORDB 232 TRANS 1)
                   (5 TPC 152 TRANS 2)(5 ORDB 231 TRANS 3)
                   (5 ORDB 232 TRANS 4)(5 TPC 155 TRANS 5)
                                       (5 ORDB 231 TRANS 7)
                   (5 TPC 158 TRANS 8)(5 ORDB 231 TRANS 9)
                  (5 ORDB 232 TRANS 10)(5 TPC 161 TRANS 11)
                                      (5 ORDB 232 TRANS 13)
                  (5 TPC 164 TRANS 14)(5 ORDB 232 TRANS 15)
                  (5 ORDB 231 TRANS 16)(5 TPC 167 TRANS 17)
                                       (5 TPC 169 TRANS 19)
                   (5 TPC 120 TRANS 20)(5 TPC 121 TRANS 21)
                   (5 TPC 122 TRANS 22)(5 TPC 123 TRANS 23)
TPC 100 TRANS                (1 CC 0 DMS 0)(16 CC 0 DMS 1)
                                      (17 ORDB 100 TRANS 0)
TPC 200 TRANS               (1 CC 0 DMS 0)(16 CC 0 DMS 1)
                                      (17 ORDB 223 TRANS 0)
  **  All other TPC TRANS datafill remains unchanged **
```

TOPS Increased Multiplexing (continued)

The following MAP example for table TDCDEF with datafill for cutting over to 16-position TPC-A with ORDB

```
ISGNO                                                          TDCTAB
_____________________________________________________________________
0
                     (1 NILPROT)(2 X25DCEL TPC 103 TRANS)
                   (3 X25DCEL ORDB 100 TRANS)(4 NILPROT)
         (5 X25DCEL TPC 101 TRANS)(6 X25DCEL TPC 104 TRANS)
                   (7 X25DCEL ORDB 201 TRANS)(8 NILPROT)
        (9 X25DCEL TPC 102 TRANS)(10 X25DCEL TPC 105 TRANS)
                 (11 X25DCEL ORDB 202 TRANS)(12 NILPROT)
                                (13 X25DCEL TPC 159 TRANS)
                     (14 NILPROT)(15 NILPROT)(16 NILPROT)
                   (17 X25DCEL TPC 165 TRANS)(18 NILPROT)
          (19 NILPROT)(20 NILPROT)(21 X25DCEL TPC 171 TRANS)
            (22 NILPROT)(23 NILPROT)(24 NILPROT)(25 NILPROT)
                     (26 NILPROT)(27 NILPROT)(28 NILPROT)
          (29 X25DCEL TPC 100 TRANS)(30 NILPROT)(31 NILPROT)
1
                     (1 NILPROT)(2 X25DCEL TPC 109 TRANS)
            (3 NILPROT)(4 NILPROT)(5 X25DCEL TPC 107 TRANS)
        (6 X25DCEL TPC 110 TRANS)(7 X25DTEL ORDB 210 TRANS)
                    (8 NILPROT)(9 X25DCEL TPC 108 TRANS)
      (10 X25DCEL TPC 111 TRANS)(11 X25DTEL ORDB 213 TRANS)
                   (12 NILPROT)(13 X25DCEL TPC 153 TRANS)
                     (14 NILPROT)(15 NILPROT)(16 NILPROT)
        (17 X25DCEL TPC 166 TRANS)(18 X25DCEL TPC 163 TRANS)
          (19 NILPROT)(20 NILPROT)(21 X25DCEL TPC 172 TRANS)
          (22 X25DCEL TPC 169 TRANS)(23 NILPROT)(24 NILPROT)
            (25 NILPROT)(26 NILPROT)(27 NILPROT)(28 NILPROT)
                     (29 NILPROT)(30 NILPROT)(31 NILPROT)
2
                     (1 NILPROT)(2 X25DCEL TPC 115 TRANS)
            (3 NILPROT)(4 NILPROT)(5 X25DCEL TPC 113 TRANS)
        (6 X25DCEL TPC 116 TRANS)(7 X25DTEL ORDB 223 TRANS)
                    (8 NILPROT)(9 X25DCEL TPC 114 TRANS)
      (10 X25DCEL TPC 117 TRANS)(11 X25DTEL ORDB 220 TRANS)
                   (12 NILPROT)(13 X25DCEL TPC 154 TRANS)
                   (14 X25DCEL TPC 151 TRANS)(15 NILPROT)
                   (16 NILPROT)(17 X25DCEL TPC 160 TRANS)
          (18 X25DCEL TPC 157 TRANS)(19 NILPROT)(20 NILPROT)
        (21 X25DCEL TPC 173 TRANS)(22 X25DCEL TPC 170 TRANS)
            (23 NILPROT)(24 NILPROT)(25 NILPROT)(26 NILPROT)
          (27 NILPROT)(28 NILPROT)(29 X25DCEL TPC 200 TRANS)
                                  (30 NILPROT)(31 NILPROT)
```

TOPS Increased Multiplexing (continued)

The following MAP example for table TDCDEF with datafill for cutting over to 16-position TPC-A with ORDB (continued)

```
ISGNO                                                    TDCTAB
_____________________________________________________________
3
                     (1 NILPROT)(2 X25DCEL TPC 121 TRANS)
                   , (3 X25DCEL ORDB 133 TRANS)(4 NILPROT)
         (5 X25DCEL TPC 119 TRANS)(6 X25DCEL TPC 122 TRANS)
                    (7 X25DCEL ORDB 232 TRANS)(8 NILPROT)
        (9 X25DCEL TPC 120 TRANS)(10 X25DCEL TPC 123 TRANS)
                  (11 X25DCEL ORDB 231 TRANS)(12 NILPROT)
       (13 X25DCEL TPC 155 TRANS)(14 X25DCEL TPC 152 TRANS)
          (15 NILPROT)(16 NILPROT)(17 X25DCEL TPC 161 TRANS)
          (18 X25DCEL TPC 158 TRANS)(19 NILPROT)(20 NILPROT)
         (21 X25DCEL TPC 167 TRANS)(22 X25DCEL TPC 164 TRANS)
             (23 NILPROT)(24 NILPROT)(25 NILPROT)(26 NILPROT)
             (27 NILPROT)(28 NILPROT)(29 NILPROT)(30 NILPROT)
                                                  (31 NILPROT)
```

The following MAP example for table SPECCONN with datafill for cutting over to 16-position TPC-A with ORDB

```
ENDPT1          ENDPT2                          CONTYPE    STATUS
_____________________________________________________________
DCHCHNL   0 29   DS1   TMS   0  0  1   CON        ACTIVE
DCHCHNL   2 29   DS1   TMS   0  0  2   CON        ACTIVE
DCHCHNL   0  3   DS1   TMS   0  7  1   CON        ACTIVE
DCHCHNL   3  3   DS1   TMS   0  9  1   CON        ACTIVE
DCHCHNL   1 11   DS1   TMS   0 11  3   CON        ACTIVE
DCHCHNL   3 11   DS1   TMS   0 10  3   CON        ACTIVE
DCHCHNL   2  7   DS1   TMS   0 11  4   CON        ACTIVE
DCHCHNL   3  7   DS1   TMS   0 10  4   CON        ACTIVE
```

Datafill for TPC-B (2nd TPC converted)

The datafill for TPC-B is as follows:

1 For the following specified links, OFFL the TPCs and ISG channels. Remove the SPECCONN connections:

- TPC: 101, 151, 107, 157, 113, 163, 119, 169
- ORDB: 100, 133, 213, 231, 223, 232, 210, 201, 220, 202.

TOPS Increased Multiplexing (continued)

2 Delete the 16 operator positions from table TOPSPOS. The TPCs 4, 5, 6, and 7 control these positions.

3 Delete TPCs 4, 5, 6, and 7 from TPCINV.

4 Add the 16-position TPC (TPC 1) to table TPCINV.

5 Change the TRANS TMSPVC datafill to resemble the following table TMSPVC datafill example.

6 Add TDCDEF datafill for the following links:

- TPC: 101, 201
- ORDB: 100, 133, 213, 231, 223, 232, 210, 201, 220, 202.

7 Add the SPECCONN datafill.

TOPS Increased Multiplexing (continued)

The following MAP example for table TMSPVC with datafill for cutting over to 16-position TPC-B with ORDB

```
PVCKEY                                                          PVCTAB
_____________________________________________________________________
ORDB 213 TRANS                                (5 TPC 153 TRANS 3)
                        (5 TPC 109 TRANS 9)(5 TPC 166 TRANS 16)
ORDB 231 TRANS                              (5 ORDB 133 TRANS 3)
                      (5 ORDB 133 TRANS 9)(5 ORDB 133 TRANS 16)
ORDB 223 TRANS     (17 TPC 200 TRANS 0)(5 TPC 154 TRANS 4)
                    (5 TPC 160 TRANS 10)(5 TPC 115 TRANS 15)
ORDB 232 TRANS    (17 ORDB 133 TRANS 0)(5 ORDB 133 TRANS 4)
                  (5 ORDB 133 TRANS 10)(5 ORDB 133 TRANS 15)
ORDB 210 TRANS      (5 TPC 108 TRANS 8)(5 TPC 110 TRANS 10)
                    (5 TPC 111 TRANS 11)(5 TPC 172 TRANS 22)
ORDB 201 TRANS    (5 ORDB 100 TRANS 8)(5 ORDB 100 TRANS 10)
                  (5 ORDB 100 TRANS 11)(5 ORDB 100 TRANS 22)
ORDB 220 TRANS                             (5 TPC 114 TRANS 14)
                    (5 TPC 116 TRANS 16)(5 TPC 117 TRANS 17)
                    (5 TPC 170 TRANS 20)(5 TPC 173 TRANS 23)
ORDB 202 TRANS                           (5 ORDB 100 TRANS 14)
                  (5 ORDB 100 TRANS 16)(5 ORDB 100 TRANS 17)
                  (5 ORDB 100 TRANS 20)(5 ORDB 100 TRANS 23)
ORDB 100 TRANS    (17 TPC 100 TRANS 0)(17 TPC 201 TRANS 1)
                     (5 TPC 102 TRANS 2)(5 TPC 103 TRANS 3)
                      (5 TPC 104 TRANS 4)(5 TPC 105 TRANS 5)
                    (5 ORDB 201 TRANS 8)(5 TPC 159 TRANS 9)
                  (5 ORDB 201 TRANS 10)(5 ORDB 201 TRANS 11)
                  (5 ORDB 202 TRANS 14)(5 TPC 165 TRANS 15)
                  (5 ORDB 202 TRANS 16)(5 ORDB 202 TRANS 17)
                   (5 ORDB 202 TRANS 20)(5 TPC 171 TRANS 21)
                  (5 ORDB 201 TRANS 22)(5 ORDB 202 TRANS 23)
ORDB 133 TRANS    (17 ORDB 232 TRANS 0)(17 TPC 101 TRANS 1)
                    (5 TPC 152 TRANS 2)(5 ORDB 231 TRANS 3)
                    (5 ORDB 232 TRANS 4)(5 TPC 155 TRANS 5)
                    (5 TPC 158 TRANS 8)(5 ORDB 231 TRANS 9)
                   (5 ORDB 232 TRANS 10)(5 TPC 161 TRANS 11)
                   (5 TPC 164 TRANS 14)(5 ORDB 232 TRANS 15)
                   (5 ORDB 231 TRANS 16)(5 TPC 167 TRANS 17)
                   (5 TPC 120 TRANS 20)(5 TPC 121 TRANS 21)
                   (5 TPC 122 TRANS 22)(5 TPC 123 TRANS 23)
```

TOPS Increased Multiplexing (continued)

The following MAP example for table TMSPVC with datafill for cutting over to 16-position TPC-B with ORDB (continued)

```
PVCKEY                                                          PVCTAB
_____________________________________________________________________
TPC 101 TRANS                  (1 CC 0 DMS 0)(16 CC 0 DMS 1)
                                       (17 ORDB 133 TRANS 1)
TPC 201 TRANS                 (1 CC 0 DMS 0)(16 CC 0 DMS 1)
                                       (17 ORDB 100 TRANS 1)
  **  All other TPC TRANS datafill remains unchanged **
```

TOPS Increased Multiplexing (continued)

The following MAP example for table TDCDEF with datafill for cutting over to 16-position TPC-B with ORDB

```
ISGNO                                                          TDCTAB
_____________________________________________________________________
0                    (1 NILPROT)(2 X25DCEL TPC 103 TRANS)
                     (3 X25DCEL ORDB 100 TRANS)(4 NILPROT)
                      (5 NILPROT)(6 X25DCEL TPC 104 TRANS)
                     (7 X25DCEL ORDB 201 TRANS)(8 NILPROT)
       (9 X25DCEL TPC 102 TRANS)(10 X25DCEL TPC 105 TRANS)
                   (11 X25DCEL ORDB 202 TRANS)(12 NILPROT)
                               (13 X25DCEL TPC 159 TRANS)
                      (14 NILPROT)(15 NILPROT)(16 NILPROT)
                    (17 X25DCEL TPC 165 TRANS)(18 NILPROT)
                                 (19 NILPROT)(20 NILPROT)
                    (21 X25DCEL TPC 171 TRANS)(22 NILPROT)
                      (23 NILPROT)(24 NILPROT)(25 NILPROT)
                      (26 NILPROT)(27 NILPROT)(28 NILPROT)
                               (29 X25DCEL TPC 100 TRANS)
                     (30 X25DCEL TPC 201 TRANS)(31 NILPROT)
1                     (1 NILPROT)(2 X25DCEL TPC 109 TRANS)
                     (3 NILPROT)(4 NILPROT)(5 NILPROT)
       (6 X25DCEL TPC 110 TRANS)(7 X25DTEL ORDB 210 TRANS)
                      (8 NILPROT)(9 X25DCEL TPC 108 TRANS)
      (10 X25DCEL TPC 111 TRANS)(11 X25DTEL ORDB 213 TRANS)
                    (12 NILPROT)(13 X25DCEL TPC 153 TRANS)
                      (14 NILPROT)(15 NILPROT)(16 NILPROT)
                    (17 X25DCEL TPC 166 TRANS)(18 NILPROT)
                    (17 X25DCEL TPC 166 TRANS)(18 NILPROT)
        (19 NILPROT)(20 NILPROT)(21 X25DCEL TPC 172 TRANS)
           (22 NILPROT)(23 NILPROT)(24 NILPROT)(25 NILPROT)
                      (26 NILPROT)(27 NILPROT)(28 NILPROT)
                      (29 NILPROT)(30 NILPROT)(31 NILPROT)
2                     (1 NILPROT)(2 X25DCEL TPC 115 TRANS)
       (6 X25DCEL TPC 116 TRANS)(7 X25DTEL ORDB 223 TRANS)
                      (8 NILPROT)(9 X25DCEL TPC 114 TRANS)
      (10 X25DCEL TPC 117 TRANS)(11 X25DTEL ORDB 220 TRANS)
                    (12 NILPROT)(13 X25DCEL TPC 154 TRANS)
                                 (14 NILPROT)(15 NILPROT)
                    (16 NILPROT)(17 X25DCEL TPC 160 TRANS)
                      (18 NILPROT)(19 NILPROT)(20 NILPROT)
      (21 X25DCEL TPC 173 TRANS)(22 X25DCEL TPC 170 TRANS)
          (23 NILPROT)(24 NILPROT)(25 NILPROT)(26 NILPROT)
        (27 NILPROT)(28 NILPROT)(29 X25DCEL TPC 200 TRANS)
                                 (30 NILPROT)(31 NILPROT)
```

TOPS Increased Multiplexing (continued)

The following MAP example for table TDCDEF with datafill for cutting over to 16-position TPC-B with ORDB (continued)

```
ISGNO                                                  TDCTAB
_____________________________________________________________
3
                     (1 NILPROT)(2 X25DCEL TPC 121 TRANS)
                     (3 X25DCEL ORDB 133 TRANS)(4 NILPROT)
                      (5 NILPROT)(6 X25DCEL TPC 122 TRANS)
                     (7 X25DCEL ORDB 232 TRANS)(8 NILPROT)
       (9 X25DCEL TPC 120 TRANS)(10 X25DCEL TPC 123 TRANS)
                   (11 X25DCEL ORDB 231 TRANS)(12 NILPROT)
      (13 X25DCEL TPC 155 TRANS)(14 X25DCEL TPC 152 TRANS)
        (15 NILPROT)(16 NILPROT)(17 X25DCEL TPC 161 TRANS)
                   (18 X25DCEL TPC 158 TRANS)(19 NILPROT)
                   (20 NILPROT)(21 X25DCEL TPC 167 TRANS)
       (22 X25DCEL TPC 164 TRANS)(23 NILPROT)(24 NILPROT)
          (25 NILPROT)(26 NILPROT)(27 NILPROT)(28 NILPROT)
        (29 X25DCEL TPC 101 TRANS)(30 NILPROT)(31 NILPROT)
```

The following MAP example for table SPECCONN with datafill for cutting over to 16-position TPC-B with ORDB

```
ENDPT1           ENDPT2                  CONTYPE    STATUS
_____________________________________________________________
DCHCHNL   3 29   DS1   TMS   0  1  1    CON        ACTIVE
DCHCHNL   0 30   DS1   TMS   0  1  2    CON        ACTIVE
DCHCHNL   0  3   DS1   TMS   0  7  1    CON        ACTIVE
DCHCHNL   3  3   DS1   TMS   0  9  1    CON        ACTIVE
DCHCHNL   0  7   DS1   TMS   0 11  1    CON        ACTIVE
DCHCHNL   1  7   DS1   TMS   0 10  1    CON        ACTIVE
DCHCHNL   0 11   DS1   TMS   0 11  2    CON        ACTIVE
DCHCHNL   2 11   DS1   TMS   0 10  2    CON        ACTIVE
DCHCHNL   1 11   DS1   TMS   0 11  3    CON        ACTIVE
DCHCHNL   3 11   DS1   TMS   0 10  3    CON        ACTIVE
DCHCHNL   2  7   DS1   TMS   0 11  4    CON        ACTIVE
DCHCHNL   3  7   DS1   TMS   0 10  4    CON        ACTIVE
```

TOPS Increased Multiplexing (continued)

Datafill for TPC-C (3rd TPC converted)

The datafill for TPC-C is as follows:

1 For the following specified links, OFFL the TPCs and ISG channels. Remove the SPECCONN connections:

- TPC: 102, 152, 108, 158, 114, 164, 120, 170
- ORDB: 100, 133, 213, 231, 210, 201, 220, 202.

2 Delete the 16 operator positions from table TOPSOS. The TPCs 8, 9, 10, and 11 control these positions.

3 Delete TPCs 8, 9, 10, and 11 from TPCINV.

4 Add the 16-position TPC (TPC 2) to table TPCINV.

5 Change the TRANS TMSPVC datafill to resemble the following table TMSPVC datafill example.

6 Add TDCDEF datafill for the following links:

- TPC: 102, 202
- ORDB: 100, 133, 213, 231, 210, 201, 220, 202.

7 Add the SPECCONN datafill.

TOPS Increased Multiplexing (continued)

The following MAP example for table TMSPVC with datafill for cutting over to 16-position TPC-C with ORDB

```
PVCKEY                                                          PVCTAB
_____________________________________________________________________

ORDB 213 TRANS     (17 TPC 202 TRANS 2)(5 TPC 153 TRANS 3)
                    (5 TPC 109 TRANS 9)(5 TPC 166 TRANS 16)
ORDB 231 TRANS   (17 ORDB 133 TRANS 2)(5 ORDB 133 TRANS 3)
                  (5 ORDB 133 TRANS 9)(5 ORDB 133 TRANS 16)
ORDB 223 TRANS     (17 TPC 200 TRANS 0)(5 TPC 154 TRANS 4)
                   (5 TPC 160 TRANS 10)(5 TPC 115 TRANS 15)
ORDB 232 TRANS   (17 ORDB 133 TRANS 0)(5 ORDB 133 TRANS 4)
                (5 ORDB 133 TRANS 10)(5 ORDB 133 TRANS 15)
ORDB 210 TRANS                        (5 TPC 110 TRANS 10)
                  (5 TPC 111 TRANS 11)(5 TPC 172 TRANS 22)
ORDB 201 TRANS                       (5 ORDB 100 TRANS 10)
                (5 ORDB 100 TRANS 11)(5 ORDB 100 TRANS 22)
ORDB 220 TRANS    (5 TPC 116 TRANS 16)(5 TPC 117 TRANS 17)
                                      (5 TPC 173 TRANS 23)
ORDB 202 TRANS  (5 ORDB 100 TRANS 16)(5 ORDB 100 TRANS 17)
                                     (5 ORDB 100 TRANS 23)
ORDB 100 TRANS    (17 TPC 100 TRANS 0)(17 TPC 201 TRANS 1)
                  (17 TPC 102 TRANS 2)(5 TPC 103 TRANS 3)
                   (5 TPC 104 TRANS 4)(5 TPC 105 TRANS 5)
                                      (5 TPC 159 TRANS 9)
                (5 ORDB 201 TRANS 10)(5 ORDB 201 TRANS 11)
                                      (5 TPC 165 TRANS 15)
                (5 ORDB 202 TRANS 16)(5 ORDB 202 TRANS 17)
                                      (5 TPC 171 TRANS 21)
                (5 ORDB 201 TRANS 22)(5 ORDB 202 TRANS 23)
ORDB 133 TRANS   (17 ORDB 232 TRANS 0)(17 TPC 101 TRANS 1)
                 (17 ORDB 231 TRANS 2)(5 ORDB 231 TRANS 3)
                   (5 ORDB 232 TRANS 4)(5 TPC 155 TRANS 5)
                                      (5 ORDB 231 TRANS 9)
                 (5 ORDB 232 TRANS 10)(5 TPC 161 TRANS 11)
                                      (5 ORDB 232 TRANS 15)
                 (5 ORDB 231 TRANS 16)(5 TPC 167 TRANS 17)
                                      (5 TPC 121 TRANS 21)
                  (5 TPC 122 TRANS 22)(5 TPC 123 TRANS 23)
PC 102 TRANS                  (1 CC 0 DMS 0)(16 CC 0 DMS 1)
                                     (17 ORDB 100 TRANS 2)
TPC 202 TRANS                 (1 CC 0 DMS 0)(16 CC 0 DMS 1)
                                     (17 ORDB 213 TRANS 2)
   **  All other TPC TRANS datafill remains unchanged **
```

TOPS Increased Multiplexing (continued)

The following MAP example for table TDCDEF with datafill for cutting over to 16-position TPC-C with ORDB

```
ISGNO                                                          TDCTAB
_____________________________________________________________________
0
                      (1 NILPROT)(2 X25DCEL TPC 103 TRANS)
                     (3 X25DCEL ORDB 100 TRANS)(4 NILPROT)
                      (5 NILPROT)(6 X25DCEL TPC 104 TRANS)
                     (7 X25DCEL ORDB 201 TRANS)(8 NILPROT)
                     (9 NILPROT)(10 X25DCEL TPC 105 TRANS)
                   (11 X25DCEL ORDB 202 TRANS)(12 NILPROT)
                    (13 X25DCEL TPC 159 TRANS)(14 NILPROT)
                                  (15 NILPROT)(16 NILPROT)
                    (17 X25DCEL TPC 165 TRANS)(18 NILPROT)
                                  (19 NILPROT)(20 NILPROT)
                    (21 X25DCEL TPC 171 TRANS)(22 NILPROT)
                    (23 NILPROT)(24 NILPROT)(25 NILPROT)
                      (26 NILPROT)(27 NILPROT)(28 NILPROT)
      (29 X25DCEL TPC 100 TRANS)(30 X25DCEL TPC 201 TRANS)
                                (31 X25DCEL TPC 102 TRANS)
1
                      (1 NILPROT)(2 X25DCEL TPC 109 TRANS)
                         (3 NILPROT)(4 NILPROT)(5 NILPROT)
       (6 X25DCEL TPC 110 TRANS)(7 X25DTEL ORDB 210 TRANS)
          (8 NILPROT)(9 NILPROT)(10 X25DCEL TPC 111 TRANS)
                   (11 X25DTEL ORDB 213 TRANS)(12 NILPROT)
                    (13 X25DCEL TPC 153 TRANS)(14 NILPROT)
         (15 NILPROT)(16 NILPROT)(17 X25DCEL TPC 166 TRANS)
                                  (18 NILPROT)(19 NILPROT)
                    (20 NILPROT)(21 X25DCEL TPC 172 TRANS)
           (22 NILPROT)(23 NILPROT)(24 NILPROT)(25 NILPROT)
                      (26 NILPROT)(27 NILPROT)(28 NILPROT)
        (29 NILPROT)(30 X25DCEL TPC 202 TRANS)(31 NILPROT
```

TOPS Increased Multiplexing (continued)

The following MAP example for table TDCDEF with datafill for cutting over to 16-position TPC-C with ORDB (continued)

```
ISGNO                                                  TDCTAB
_____________________________________________________________
2
                      (1 NILPROT)(2 X25DCEL TPC 115 TRANS)
                         (3 NILPROT)(4 NILPROT)(5 NILPROT)
       (6 X25DCEL TPC 116 TRANS)(7 X25DTEL ORDB 223 TRANS)
           (8 NILPROT)(9 NILPROT)(10 X25DCEL TPC 117 TRANS)
                   (11 X25DTEL ORDB 220 TRANS)(12 NILPROT)
                    (13 X25DCEL TPC 154 TRANS)(14 NILPROT)
                                 (15 NILPROT)(16 NILPROT)
                    (17 X25DCEL TPC 160 TRANS)(18 NILPROT)
         (19 NILPROT)(20 NILPROT)(21 X25DCEL TPC 173 TRANS)
           (22 NILPROT)(23 NILPROT)(24 NILPROT)(25 NILPROT)
                      (26 NILPROT)(27 NILPROT)(28 NILPROT)
         (29 X25DCEL TPC 200 TRANS)(30 NILPROT)(31 NILPROT)
3
                     (1 NILPROT)(2 X25DCEL TPC 121 TRANS)
                    (3 X25DCEL ORDB 133 TRANS)(4 NILPROT)
                     (5 NILPROT)(6 X25DCEL TPC 122 TRANS)
                    (7 X25DCEL ORDB 232 TRANS)(8 NILPROT)
                    (9 NILPROT)(10 X25DCEL TPC 123 TRANS)
                   (11 X25DCEL ORDB 231 TRANS)(12 NILPROT)
                               (13 X25DCEL TPC 155 TRANS)
                      (14 NILPROT)(15 NILPROT)(16 NILPROT)
                    (17 X25DCEL TPC 161 TRANS)(18 NILPROT)
        (19 NILPROT)(20 NILPROT)(21 X25DCEL TPC 167 TRANS)
                      (22 NILPROT)(23 NILPROT)(24 NILPROT)
                 (25 NILPROT)(26 )(27 NILPROT)(28 NILPROT)
        (29 X25DCEL TPC 101 TRANS)(30 NILPROT)(31 NILPROT)
```

TOPS Increased Multiplexing (continued)

The following MAP example for table SPECCONN with datafill for cutting over to 16-position TPC-C with ORDB

```
ENDPT1            ENDPT2                  CONTYPE    STATUS
_________________________________________________________________
DCHCHNL   0 31    DS1   TMS   0  2  1    CON        ACTIVE
DCHCHNL   1 30    DS1   TMS   0  2  2    CON        ACTIVE
DCHCHNL   0  3    DS1   TMS   0  7  1    CON        ACTIVE
DCHCHNL   3  3    DS1   TMS   0  9  1    CON        ACTIVE
DCHCHNL   0  7    DS1   TMS   0 11  1    CON        ACTIVE
DCHCHNL   1  7    DS1   TMS   0 10  1    CON        ACTIVE
DCHCHNL   0 11    DS1   TMS   0 11  2    CON        ACTIVE
DCHCHNL   2 11    DS1   TMS   0 10  2    CON        ACTIVE
DCHCHNL   1 11    DS1   TMS   0 11  3    CON        ACTIVE
DCHCHNL   3 11    DS1   TMS   0 10  3    CON        ACTIVE
```

Datafill for TPC-D (4th TPC converted)

The following is datafill for TPC-D:

1 For the following specified links, OFFL the TPCs and ISG channels. Remove the SPECCONN connections:

- TPC: 103, 153, 109, 159, 115, 165, 121, 171
- ORDB: 100, 133, 213, 231, 223, 232, 210, 201.

2 Delete the 16 operator positions from table TOPSPOS. The TPCs 12, 13, 14 and 15 control these positions.

3 Delete TPCs 12, 13, 14 and 15 from TPCINV.

4 Add the 16-position TPC (TPC 3) to table TPCINV.

5 Change the TRANS TMSPVC datafill to resemble the following table TMSPVC datafill example.

6 Add TDCDEF datafill for the following links:

- TPC: 103, 203
- ORDB: 100, 133, 213, 231, 223, 232, 210, 201.

7 Add the SPECCONN datafill.

TOPS Increased Multiplexing (continued)

The following MAP example for table TMSPVC TRANS with datafill for cutting over to 16-position TPC-D with ORDB

```
 PVCKEY                                                          PVCTAB
_____________________________________________________________________
ORDB 213 TRANS   (17 TPC 202 TRANS 2)(5 TPC 166 TRANS 16)
ORDB 231 TRANS  (17 ORDB 133 TRANS 2)(5 ORDB 133 TRANS 16)
ORDB 223 TRANS  (17 TPC 200 TRANS 0)(17 TPC 103 TRANS 3)
                   (5 TPC 154 TRANS 4)(5 TPC 160 TRANS 10)
ORDB 232 TRANS  (17 ORDB 133 TRANS 0)(17 ORDB 133 TRANS 3)
                  (5 ORDB 133 TRANS 4(5 ORDB 133 TRANS 10)
ORDB 210 TRANS    (17 TPC 203 TRANS 3)(5 TPC 110 TRANS 10)
                  (5 TPC 111 TRANS 11)(5 TPC 172 TRANS 22)
ORDB 201 TRANS  (17 ORDB 100 TRANS 3)(5 ORDB 100 TRANS 10)
                (5 ORDB 100 TRANS 11)(5 ORDB 100 TRANS 22)
ORDB 220 TRANS   (5 TPC 116 TRANS 16)(5 TPC 117 TRANS 17)
                                       (5 TPC 173 TRANS 23)
ORDB 202 TRANS (5 ORDB 100 TRANS 16)(5 ORDB 100 TRANS 17)
                                     (5 ORDB 100 TRANS 23)
ORDB 100 TRANS    (17 TPC 100 TRANS 0)(17 TPC 201 TRANS 1)
                  (17 TPC 102 TRANS 2)(17 TPC 201 TRANS 3)
                   (5 TPC 104 TRANS 4)(5 TPC 105 TRANS 5)
                 (5 ORDB 201 TRANS 10)(5 ORDB 201 TRANS 11)
                 (5 ORDB 202 TRANS 16)(5 ORDB 202 TRANS 17)
                 (5 ORDB 201 TRANS 22)(5 ORDB 202 TRANS 23)
ORDB 133 TRANS   (17 ORDB 232 TRANS 0)(17 TPC 101 TRANS 1)
                (17 ORDB 231 TRANS 2)(17 ORDB 232 TRANS 3)
                   (5 ORDB 232 TRANS 4)(5 TPC 155 TRANS 5)
                  (5 ORDB 232 TRANS 10)(5 TPC 161 TRANS 11)
                  (5 ORDB 231 TRANS 16)(5 TPC 167 TRANS 17)
                   (5 TPC 122 TRANS 22)(5 TPC 123 TRANS 23)
TPC 103 TRANS               (1 CC 0 DMS 0)(16 CC 0 DMS 1)
                                          (17 ORDB 223 TRANS 3)
TPC 203 TRANS                (1 CC 0 DMS 0)(16 CC 0 DMS 1)
                                          (17 ORDB 210 TRANS 3)

  **  All other TPC TRANS datafill remains unchanged **
```

TOPS Increased Multiplexing (continued)

The following MAP example for table TDCDEF with datafill for cutting over to 16-position TPC-D with ORDB

```
 ISGNO                                                    TDCTAB
_____________________________________________________________________
0
         (1 NILPROT)(2 NILPROT)(3 X25DCEL ORDB 100 TRANS)
          (4 NILPROT)(5 NILPROT)(6 X25DCEL TPC 104 TRANS)
           (7 X25DCEL ORDB 201 TRANS)(8 NILPROT)(9 NILPROT)
     (10 X25DCEL TPC 105 TRANS)(11 X25DCEL ORDB 202 TRANS)
                     (12 NILPROT)(13 NILPROT)(14 NILPROT)
                                  (15 NILPROT)(16 NILPROT)
                     (17 NILPROT)(18 NILPROT)(19 NILPROT)
                     (20 NILPROT)(21 NILPROT)(22 NILPROT)
                     (23 NILPROT)(24 NILPROT)(25 NILPROT)
                     (26 NILPROT)(27 NILPROT)(28 NILPROT)
       (29 X25DCEL TPC 100 TRANS)(30 X25DCEL TPC 201 TRANS)
                               (31 X25DCEL TPC 102 TRANS)
1
               (1 NILPROT)(2 NILPROT)(3 NILPROT)(4 NILPROT)
                     (5 NILPROT)(6 X25DCEL TPC 110 TRANS)
          (7 X25DTEL ORDB 210 TRANS)(8 NILPROT)(9 NILPROT)
      (10 x25DCEL TPC 111 TRANS)(11 X25DTEL ORDB 213 TRANS)
          (12 NILPROT)(13 NILPROT)(14 NILPROT)(15 NILPROT)
                   (16 NILPROT)(17 X25DCEL TPC 166 TRANS)
                     (18 NILPROT)(19 NILPROT)(20 NILPROT)
        (21 X25DCEL TPC 172 TRANS)(22 NILPROT)(23 NILPROT)
          (24 NILPROT)(25 NILPROT)(26 NILPROT)(27 NILPROT)
        (28 NILPROT)(29 NILPROT)(30 X25DCEL TPC 202 TRANS)
                               (31 X25DCEL TPC 203 TRANS)
2
              (1 NILPROT)(2 NILPROT)(3 NILPROT)(4 NILPROT)
                     (5 NILPROT)(6 X25DCEL TPC 116 TRANS)
                    (7 X25DTEL ORDB 223 TRANS)(8 NILPROT)
                    (9 NILPROT)(10 X25DCEL TPC 117 TRANS)
                   (11 X25DTEL ORDB 220 TRANS)(12 NILPROT)
                   (13 X25DTEL ORDB 154 TRANS)(14 NILPROT)
         (15 NILPROT)(16 NILPROT)(17 X25DCEL TPC 160 TRANS)
                     (18 NILPROT)(19 NILPROT)(20 NILPROT)
                    (21 X25DCEL TPC 173 TRANS)(22 NILPROT)
           (23 NILPROT)(24 NILPROT)(25 NILPROT)(26 NILPROT)
          (27 NILPROT)(28 NILPROT)(29 X25DCEL TPC 200 TRANS)
                    (30 X25DCEL TPC 103 TRANS)(31 NILPROT)
```

TOPS Increased Multiplexing (continued)

The following MAP example for table TDCDEF with datafill for cutting over to 16-position TPC-D with ORDB

```
 ISGNO                                                  TDCTAB
_____________________________________________________________
3
           (1 NILPROT)(2 NILPROT)(3 X25DCEL ORDB 133 TRANS)
           (4 NILPROT)(5 NILPROT)(6 X25DCEL TPC 122 TRANS)
                     (7 X25DCEL ORDB 232 TRANS)(8 NILPROT)
                     (9 NILPROT)(10 X25DCEL TPC 123 TRANS)
                   (11 X25DCEL ORDB 231 TRANS)(12 NILPROT)
                   (13 X25DCEL ORDB 155 TRANS)(14 NILPROT)
                                 (15 NILPROT)(16 NILPROT)
                    (17 X25DCEL TPC 161 TRANS)(18 NILPROT)
        (19 NILPROT)(20 NILPROT)(21 X25DCEL TPC 167 TRANS)
                      (22 NILPROT)(23 NILPROT)(24 NILPROT)
           (25 NILPROT)(26 NILPROT)(27 NILPROT)(28 NILPROT)
         (29 X25DCEL TPC 101 TRANS)(30 NILTROT)(31 NILTROT)
```

The following MAP example for table SPECCONN with datafill for cutting over to 16-position TPC-D with ORDB

```
ENDPT1            ENDPT2                  CONTYPE    STATUS
_____________________________________________________________
DCHCHNL   2 30    DS1   TMS   0  3  1    CON        ACTIVE
DCHCHNL   1 31    DS1   TMS   0  3  2    CON        ACTIVE
DCHCHNL   0  3    DS1   TMS   0  7  1    CON        ACTIVE
DCHCHNL   3  3    DS1   TMS   0  9  1    CON        ACTIVE
DCHCHNL   0  7    DS1   TMS   0 11  1    CON        ACTIVE
DCHCHNL   1  7    DS1   TMS   0 10  1    CON        ACTIVE
DCHCHNL   1 11    DS1   TMS   0 11  3    CON        ACTIVE
DCHCHNL   3 11    DS1   TMS   0 10  3    CON        ACTIVE
DCHCHNL   2  7    DS1   TMS   0 11  4    CON        ACTIVE
DCHCHNL   3  7    DS1   TMS   0 10  4    CON        ACTIVE
```

Datafill for TPC-E (5th TPC converted)

The datafill for TPC-E is as follows:

1 For the following specified links, OFFL the TPCs and ISG channels. Remove the SPECCONN connections:

- TPC: 104, 154, 110, 160, 116, 166, 122, 172
- ORDB: 100, 133, 210, 201, 220, 202, 213, 231, 223, 232.

TOPS Increased Multiplexing (continued)

2 Delete the 16 operator positions from table TOPSPOS. The TPCs 16, 17, 18, and 19 control these positions.

3 Delete TPCs 16, 17, 18, and 19 from TPCINV.

4 Add the 16-position TPC (TPC 4) to table TPCINV.

5 Change the TRANS TMSPVC datafill to resemble the following table TMSPVC datafill example.

6 Add TDCDEF datafill for the following links:

- TPC: 104, 204
- ORDB: 100, 133, 210, 201, 220, 202, 213, 231, 223, 232.

7 Add the SPECCONN datafill.

The following MAP example for table TMSPVC with datafill for cutting over to 16-position TPC-E with ORDB

```
PVCKEY                                                          PVCTAB
_____________________________________________________________________
ORDB 213 TRANS                          (17 TPC 202 TRANS 2)
ORDB 231 TRANS                          (17 ORDB 133 TRANS 2)
ORDB 223 TRANS     (17 TPC 200 TRANS 0)(17 TPC 103 TRANS 3)
ORDB 232 TRANS  (17 ORDB 133 TRANS 0)(17 ORDB 133 TRANS 3)
ORDB 210 TRANS     (17 TPC 203 TRANS 3)(5 TPC 111 TRANS 11)
ORDB 201 TRANS  (17 ORDB 100 TRANS 3)(5 ORDB 100 TRANS 11)
ORDB 220 TRANS     (17 TPC 204 TRANS 4)(5 TPC 117 TRANS 17)
                                        (5 TPC 173 TRANS 23)
ORDB 202 TRANS  (17 ORDB 100 TRANS 4)(5 ORDB 100 TRANS 17)
                                       (5 ORDB 100 TRANS 23)
ORDB 100 TRANS     (17 TPC 100 TRANS 0)(17 TPC 201 TRANS 1)
                   (17 TPC 102 TRANS 2)(17 TPC 201 TRANS 3)
                  (17 ORDB 202 TRANS 4)(5 TPC 105 TRANS 5)
                                       (5 ORDB 201 TRANS 11)
                                       (5 ORDB 202 TRANS 17)
                                       (5 ORDB 202 TRANS 23)
ORDB 133 TRANS    (17 ORDB 232 TRANS 0)(17 TPC 101 TRANS 1)
               (17 ORDB 231 TRANS 2)  (17 ORDB 232 TRANS 3)
                    (17 TPC 104 TRANS 4)(5 TPC 155 TRANS 5)
                                        (5 TPC 161 TRANS 11)
                                        (5 TPC 167 TRANS 17)
                                        (5 TPC 123 TRANS 23)
TPC 104 TRANS                 (1 CC 0 DMS 0)(16 CC 0 DMS 1)
                                       (17 ORDB 133 TRANS 4)
TPC 204 TRANS                 (1 CC 0 DMS 0)(16 CC 0 DMS 1)
                                       (17 ORDB 220 TRANS 4)
**  All other TPC TRANS datafill remains unchanged *
```

TOPS Increased Multiplexing (continued)

The following MAP example for table TDCDEF with datafill for cutting over to 16-position TPC-E with ORDB

```
 ISGNO                                                    TDCTAB
_____________________________________________________________________
0
          (1 NILPROT)(2 NILPROT)(3 X25DCEL ORDB 100 TRANS)
                          (4 NILPROT)(5 NILPROT)(6 NILPROT)
           (7 X25DCEL ORDB 201 TRANS)(8 NILPROT)(9 NILPROT)
     (10 X25DCEL TPC 105 TRANS)(11 X25DCEL ORDB 202 TRANS)
          (12 NILPROT)(13 NILPROT)(14 NILPROT)(15 NILPROT)
          (16 NILPROT)(17 NILPROT)(18 NILPROT)(19 NILPROT)
          (20 NILPROT)(21 NILPROT)(22 NILPROT)(23 NILPROT)
          (24 NILPROT)(25 NILPROT)(26 NILPROT)(27 NILPROT)
                     (28 NILPROT)(29 X25DCEL TPC 100 TRANS)
       (30 X25DCEL TPC 201 TRANS)(31 X25DCEL TPC 102 TRANS)
1            (1 NILPROT)(2 NILPROT)(3 NILPROT)(4 NILPROT)
          (5 NILPROT)(6 NILPROT)(7 X25DTEL ORDB 210 TRANS)
          (8 NILPROT)(9 NILPROT)(10 X25DCEL TPC 111 TRANS)
                    (11 X25DTEL ORDB 213 TRANS)(12 NILPROT)
           (13 NILPROT)(14 NILPROT)(15 NILPROT)(16 NILPROT)
           (17 NILPROT)(18 NILPROT)(19 NILPROT)(20 NILPROT)
           (21 NILPROT)(22 NILPROT)(23 NILPROT)(24 NILPROT)
           (25 NILPROT)(26 NILPROT)(27 NILPROT)(28 NILPROT)
                     (29 NILPROT)(30 X25DCEL TPC 202 TRANS)
                                 (31 X25DCEL TPC 203 TRANS)
2
              (1 NILPROT)(2 NILPROT)(3 NILPROT)(4 NILPROT)
          (5 NILPROT)(6 NILPROT)(7 X25DTEL ORDB 223 TRANS)
          (8 NILPROT)(9 NILPROT)(10 X25DCEL TPC 117 TRANS)
         (11 X25DTEL ORDB 220 TRANS)(12 NILPROT)(13 NILPROT)
            (14 NILPROT)(15 NILPROT)(16 NILPROT)(17 NILPROT)
                       (18 NILPROT)(19 NILPROT)(20 NILPROT)
                     (21 X25DCEL TPC 173 TRANS)(22 NILPROT)
           (23 NILPROT)(24 NILPROT)(25 NILPROT)(26 NILPROT)
         (27 NILPROT)(28 NILPROT)(29 X25DCEL TPC 200 TRANS)
       (30 X25DCEL TPC 103 TRANS)(31 X25DCEL TPC 204 TRANS)
```

TOPS Increased Multiplexing (continued)

The following MAP example for table TPCDEF with datafill for cutting over to 16-position TPC-E with ORDB (continued)

```
 ISGNO                                                    TDCTAB
_____________________________________________________________________
3
           (1 NILPROT)(2 NILPROT)(3 X25DCEL ORDB 133 TRANS)
                        (4 NILPROT)(5 NILPROT)(6 NILPROT)
                     (7 X25DCEL ORDB 232 TRANS)(8 NILPROT)
                     (9 NILPROT)(10 X25DCEL TPC 123 TRANS)
                   (11 X25DCEL ORDB 231 TRANS)(12 NILPROT)
                    (13 X25DCEL TPC 155 TRANS)(14 NILPROT)
         (15 NILPROT)(16 NILPROT)(17 X25DCEL TPC 161 TRANS)
                      (18 NILPROT)(19 NILPROT)(20 NILPROT)
         (21 X25DCEL TPC 167 TRANS)(22 NILPROT)(23 NILPROT)
           (24 NILPROT)(25 NILPROT)(26 NILPROT)(27 NILPROT)
                     (28 NILPROT)(29 X25DCEL TPC 101 TRANS)
     (30 X25DCEL TPC 104 TRANS)(31 X25DCEL TPC 205 NILPROT)
```

The following MAP example for table SPECCONN with datafill for cutting over to 16-position TPC-E with ORDB

```
ENDPT1          ENDPT2                      CONTYPE    STATUS
_____________________________________________________________
DCHCHNL   3 30  DS1   TMS   0  4  1   CON        ACTIVE
DCHCHNL   2 31  DS1   TMS   0  4  2   CON        ACTIVE
DCHCHNL   0  3  DS1   TMS   0  7  1   CON        ACTIVE
DCHCHNL   3  3  DS1   TMS   0  9  1   CON        ACTIVE
DCHCHNL   0  7  DS1   TMS   0 11  1   CON        ACTIVE
DCHCHNL   1  7  DS1   TMS   0 10  1   CON        ACTIVE
DCHCHNL   0 11  DS1   TMS   0 11  2   CON        ACTIVE
DCHCHNL   2 11  DS1   TMS   0 10  2   CON        ACTIVE
DCHCHNL   1 11  DS1   TMS   0 11  3   CON        ACTIVE
DCHCHNL   3 11  DS1   TMS   0 10  3   CON        ACTIVE
DCHCHNL   2  7  DS1   TMS   0 11  4   CON        ACTIVE
DCHCHNL   3  7  DS1   TMS   0 10  4   CON        ACTIVE
```

Datafill for TPC-F (6th TPC converted)

The datafill for TPC-F is as follows:

1 For the following specified links, OFFL the TPCs and ISG channels. Remove the SPECCONN connections:

- TPC: 105, 155, 111, 161, 117, 167, 123, 173
- ORDB: 100, 133, 210, 201, 220, 202.

2 Delete the 16 operator positions from table TOPSPOS. The TPCs 20, 21, 22, and 23 control these positions.

3 Delete TPCs 20, 21, 22, and 23 from TPCINV.

4 Add the 16-position TPC (TPC 5) to table TPCINV.

5 Change the TRANS TMSPVC datafill to resemble the following table TMSPVC datafill example.

6 Add TDCDEF datafill for the following links:

- TPC: 105, 205
- ORDB: 100, 133, 210, 201, 220, 202.

7 Add the SPECCONN datafill.

The following MAP example for table TMSPVC with datafill for cutting over to 16-position TPC-F with ORDB

```
 PVCKEY                                                PVCTAB
-------------------------------------------------------------
ORDB 213 TRANS                        (17 TPC 202 TRANS 2)
ORDB 231 TRANS                       (17 ORDB 133 TRANS 2)
ORDB 223 TRANS  (17 TPC 200 TRANS 0)(17 TPC 103 TRANS 3)
ORDB 232 TRANS(17 ORDB 133 TRANS 0)(17 ORDB 133 TRANS 3)
ORDB 210 TRANS  (17 TPC 203 TRANS 3)(17 TPC 105 TRANS 5)
ORDB 201 TRANS(17 ORDB 100 TRANS 3)(17 ORDB 100 TRANS 5)
ORDB 220 TRANS                        (17 TPC 204 TRANS 4)
ORDB 202 TRANS                       (17 ORDB 100 TRANS 4)
ORDB 100 TRANS  (17 TPC 100 TRANS 0)(17 TPC 201 TRANS 1)
              (17 TPC 102 TRANS 2)(17 ORDB 201 TRANS 3)
             (17 ORDB 202 TRANS 4)(17 ORDB 201 TRANS 5)
ORDB 133 TRANS (17 ORDB 232 TRANS 0)(17 TPC 101 TRANS 1)
             (17 ORDB 231 TRANS 2)(17 ORDB 232 TRANS 3)
               (17 TPC 104 TRANS 4)(17 TPC 205 TRANS 5)
TPC 105 TRANS             (1 CC 0 DMS 0)(16 CC 0 DMS 1)
                                       (17 ORDB 210 TRANS 5)
TPC 205 TRANS             (1 CC 0 DMS 0)(16 CC 0 DMS 1)
                                       (17 ORDB 133 TRANS 5)
   **  All other TPC TRANS datafill remains unchanged **
```

TOPS Increased Multiplexing (continued)

The following MAP example for table TDCDEF with datafill for cutting over to 16-position TPC-F with ORDB

```
 ISGNO                                                          TDCTAB
_____________________________________________________________________
0
          (1 NILPROT)(2 NILPROT)(3 X25DCEL ORDB 100 TRANS)
                           (4 NILPROT)(5 NILPROT)(6 NILPROT)
            (7 X25DCEL ORDB 201 TRANS)(8 NILPROT)(9 NILPROT)
       (10 NILPROT)(11 X25DCEL ORDB 202 TRANS)(12 NILPROT)
          (13 NILPROT)(14 NILPROT)(15 NILPROT)(16 NILPROT)
          (17 NILPROT)(18 NILPROT)(19 NILPROT)(20 NILPROT)
          (21 NILPROT)(22 NILPROT)(23 NILPROT)(24 NILPROT)
          (25 NILPROT)(26 NILPROT)(27 NILPROT)(28 NILPROT)
      (29 X25DCEL TPC 100 TRANS)(30 X25DCEL TPC 202 TRANS)
                                 (31 X25DCEL TPC 203 TRANS)
1   (1 NILPROT)(2 NILPROT)(3 NILPROT)(4 NILPROT)(5 NILPROT)
          (6 NILPROT)(7 X25DTEL ORDB 210 TRANS)(8 NILPROT)
           (9 NILPROT)(NILPROT)(11 X25DTEL ORDB 213 TRANS)
          (12 NILPROT)(13 NILPROT)(14 NILPROT)(15 NILPROT)
          (16 NILPROT)(17 NILPROT)(18 NILPROT)(19 NILPROT)
          (20 NILPROT)(21 NILPROT)(22 NILPROT)(23 NILPROT)
          (24 NILPROT)(25 NILPROT)(26 NILPROT)(27 NILPROT)
                    (28 NILPROT)(29 X25DCEL TPC 105 TRANS)
      (30 X25DCEL TPC 202 TRANS)(31 X25DCEL TPC 203 TRANS)
2   (1 NILPROT)(2 NILPROT)(3 NILPROT)(4 NILPROT)(5 NILPROT)
          (6 NILPROT)(7 X25DTEL ORDB 223 TRANS)(8 NILPROT)
         (9 NILPROT)(10 NILPROT)(11 X25DTEL ORDB 220 TRANS)
          (12 NILPROT)(13 NILPROT)(14 NILPROT)(15 NILPROT)
          (16 NILPROT)(17 NILPROT)(18 NILPROT)(19 NILPROT)
          (20 NILPROT)(21 NILPROT)(22 NILPROT)(23 NILPROT)
          (24 NILPROT)(25 NILPROT)(26 NILPROT)(27 NILPROT)
                    (28 NILPROT)(29 X25DCEL TPC 200 TRANS)
       (30 X25DCEL TPC 103 TRANS)(31 X25DCEL TPC 204 TRANS)
3
          (1 NILPROT)(2 NILPROT)(3 X25DCEL ORDB 133 TRANS)
                           (4 NILPROT)(5 NILPROT)(6 NILPROT)
          (7 X25DCEL ORDB 232 TRANS)(8 NILPROT)(9 NILPROT)
       (10 NILPROT)(11 X25DCEL ORDB 231 TRANS)(12 NILPROT)
          (13 NILPROT)(14 NILPROT)(15 NILPROT)(16 NILPROT)
          (17 NILPROT)(18 NILPROT)(19 NILPROT)(20 NILPROT)
          (21 NILPROT)(22 NILPROT)(23 NILPROT)(24 NILPROT)
          (25 NILPROT)(26 NILPROT)(27 NILPROT)(28 NILPROT)
       (29 X25DCEL TPC 101 TRANS)(30 X25DCEL TPC 104 TRANS)
                                 (31 X25DCEL TPC 205 TRANS)
```

TOPS Increased Multiplexing (continued)

The following MAP example for table SPECCONN with datafill for cutting over to 16-position TPC-F with ORDB

```
  ENDPT1          ENDPT2                  CONTYPE    STATUS
_______________________________________________________________
DCHCHNL   1 29   DS1   TMS   0  5  1   CON        ACTIVE
DCHCHNL   3 31   DS1   TMS   0  5  2   CON        ACTIVE
DCHCHNL   0  3   DS1   TMS   0  7  1   CON        ACTIVE
DCHCHNL   3  3   DS1   TMS   0  9  1   CON        ACTIVE
DCHCHNL   0  7   DS1   TMS   0 11  1   CON        ACTIVE
DCHCHNL   1  7   DS1   TMS   0 10  1   CON        ACTIVE
DCHCHNL   0 11   DS1   TMS   0 11  2   CON        ACTIVE
DCHCHNL   2 11   DS1   TMS   0 10  2   CON        ACTIVE
```

Guidelines for a 20-Position TPC

Datafill for a 20-position TPC without TMS ORDB A TOPS position controller (TPC) that controls 20 positions without access to an ORDB database through the TOPS message switch (TMS) appears in the following datafill example. The sample datafill sets up logical connections. These connections appear in the block diagram. The diagram does not contain information on voice link connections.

TOPS Increased Multiplexing (continued)

Logical connection of TMS to 20-position TPC without ORDB

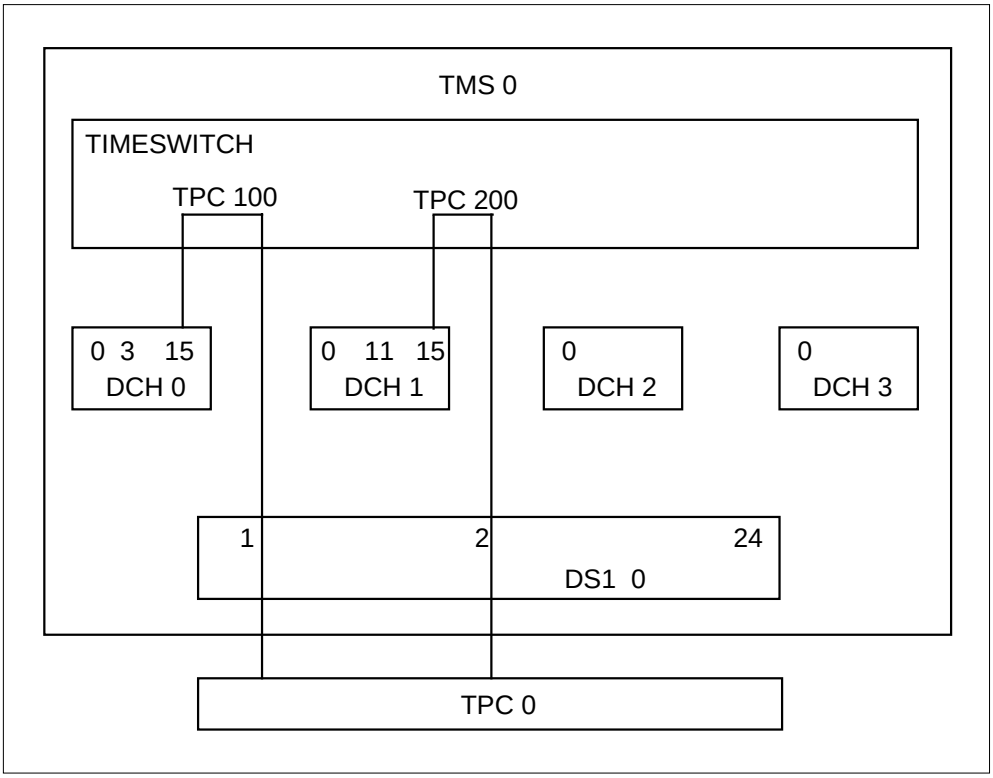

In the datafill examples that follow, all operator positions are in table TOPSPOS. The datafill for the TPC data links is in table TPCINV.

Table TMSPVC provides the permanent virtual circuit (PVC) layout descriptions. A logical model of the sample PVC layout appears in the following figure.

This datafill uses configuration type MPX20. The configuration appears in table PVCTYPE. The TMSPVC datafill does not contain ORDB or DA PVCs. Access to the databases cannot occur through the TMS. The only required PVCs are 1 CC MTC and 20 CC call processing PVCs. Table TDCDEF contains the PVC layout assigned to a DCH channel. Table SPECCONN provides the connections between the DS1 channels and the DCH channels.

PVC layout for 20-position TPC without ORDB

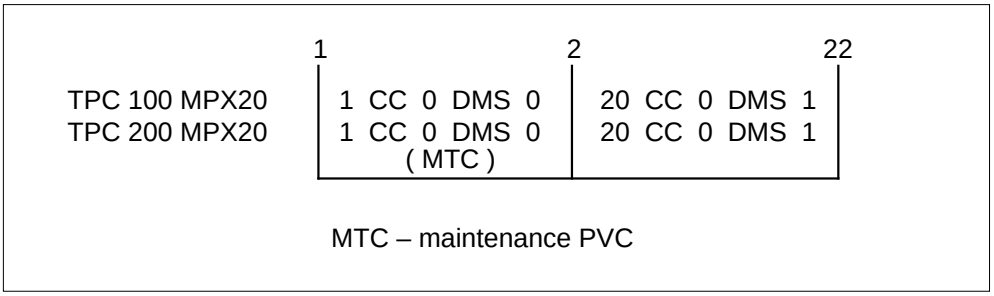

Sample datafill for 20 operator positions without ORDB access appears in the following example.

MAP example for table PVCTYPE for 20-position TPC without ORDB

```
VALUE                                SYMBOL
_____________________________________________________________
  9                                   MPX20
```

MAP example for table TMSPVC for 20-position TPC without ORDB

```
PVCKEY                              PVCTAB
_____________________________________________________________
TPC  100 MPX20    (1 CC 0 DMS 0)(20 CC 0 DMS 1)
TPC  200 MPX20    (1 CC 0 DMS 0)(20 CC 0 DMS 1)
```

MAP example for table TPCINV for 20-position TPC without ORDB

```
TPCNAME FRTYPE FRNO SHPOS FLOOR ROW FRPOS LOAD
TMSNO TMSCKTNO TMSCKTTS TPCTYPE RTSTIMR CLUSTRSZ
_____________________________________________________________
  TPC   0    PCE    0     0     0  AA     0   XX
   0      0    (1)(2)  IBMMPX20     1      20
```

TOPS Increased Multiplexing (continued)

MAP example for table TOPSPOS for 20-position TPC without ORDB

```
 POSNO         VCCKT VCPDGRP CARDCODE              DATAPATH
                           POSAREA
_____________________________________________________________
   000   TMS 0 0  3   NPDGP   DS1SIG   TMS MP OPP  0  0
                    OPR 2 TOPSACD ALL ALL
  001   TMS 0 0  4   NPDGP   DS1SIG   TMS MP OPP  0  1
                   OPR 2 TOPSACD ALL ALL
                         *
                         *
 018   TMS 0 0 21   NPDGP   DS1SIG   TMS MP OPP  0 18
                  OPR 2 TOPSACD ALL ALL
019   TMS 0 0 22   NPDGP   DS1SIG   TMS MP OPP  0 19
      OPR 2 TOPSACD ALL ALL
```

MAP example for table TMSPSDEV for 20-position TPC without ORDB

```
DEVNAME  TMSNO                  CKTTAB
_____________________________________________________________
             **  nothing datafilled  **
```

MAP example for table ISGDEF for 20-position TPC without ORDB

```
ISGNO PMTYPE PMNO SERVICE        CHNLTAB
_____________________________________________________________
   0    TMS    0   (TDC)      (15 TDC 56K OFF)
   1    TMS    0   (TDC)      (15 TDC 56K OFF)
```

MAP example for table TDCDEF for 20-position TPC without ORDB

```
ISGNO            TDCTAB
_____________________________________________________________
0         (15 X25DCEL TPC 100 MPX20)
1         (15 X25DCEL TPC 200 MPX20)
```

TOPS Increased Multiplexing (continued)

MAP example for table SPECCONN for 20-position TPC without ORDB

```
ENDPT1            ENDPT2                  CONTYPE   STATUS
_________________________________________________________
DCHCHNL   0 15    DS1   TMS   0  0  1    CON       ACTIVE
DCHCHNL   1 15    DS1   TMS   0  0  2    CON       ACTIVE
```

Datafill for a 20-position TPC with TMS ORDB This datafill example is of a TPC that controls 20 operator positions with access to an ORDB database through TMS. The datafill sets up logical connections. These connections appear in the block diagram. The diagram does not contain information on voice link connections.

Logical connection of TMS to 20-position TPC with ORDB

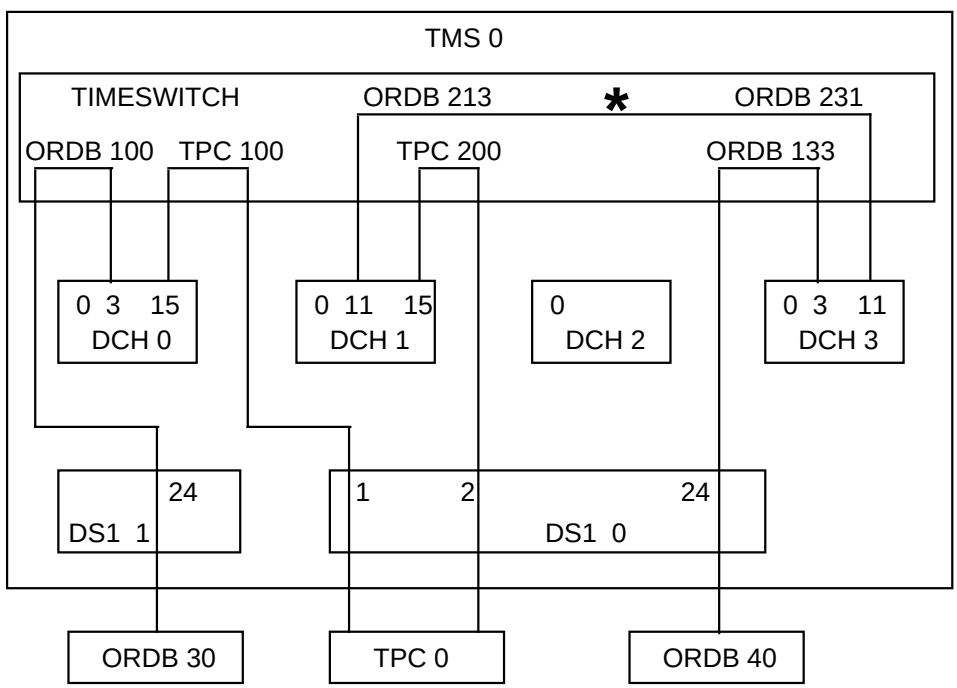

* Inter-DCH connections transfer through DS1 channels. The system loops these channels.

TOPS Increased Multiplexing (continued)

In the following datafill example, all operator positions are entered in table TOPSPOS. The datafill for the TPC data links is in table TPCINV. The datafill for the ORDB database data links is in table TMSPSDEV.

Table TMSPVC provides the PVC layout descriptions. A logical model of the sample PVC layout appears in the following figure.

This datafill uses the configuration types MPX20 and CGI20. These configurations appear in table PVSTYPE. The TMSPVC datafill is for communication to an ORDB database only. The datafill is only for ORDB PVCs because a DA database connection through TMS is not available.

The TPC controls 20 positions. The following circuits appear in the table:

- 1 CC MTC
- 20 CC call processing
- 1 ORDB MTC
- 20 ORDB call processing PVCs

Table TDCDEF contains the PVC layout assigned to a DCH channel. Table SPECCONN provides the connections between the following channels:

- DS1 channels and DCH channels
- DCH channels and DCH channels, for inter-DCH connections

PVC layout for 20-position TPC with ORDB

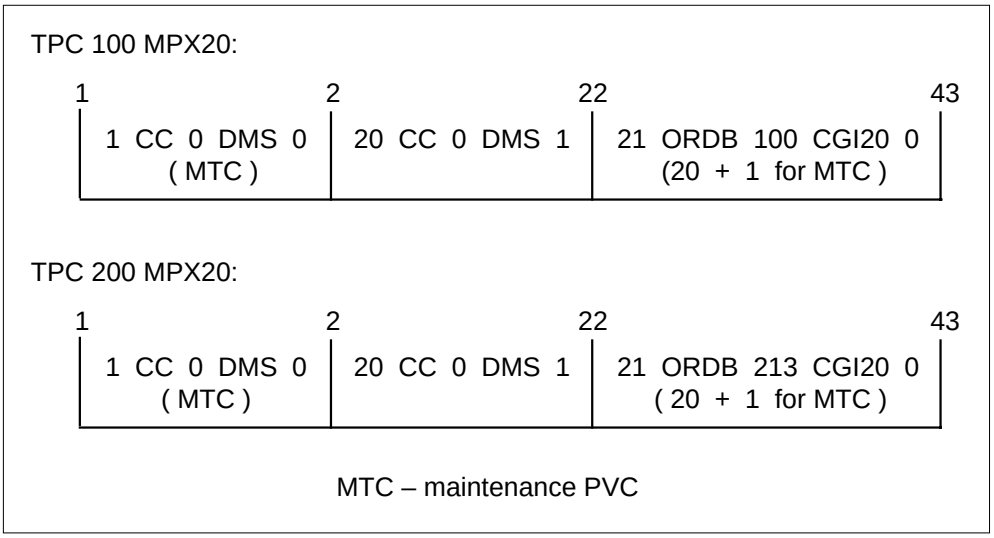

TOPS Increased Multiplexing (continued)

Sample datafill for 20 operator positions with ORDB access appears in the following example.

MAP example for table PVCTYPE for 20-position TPC with ORDB

```
VALUE                          SYMBOL
_____________________________________________________________
  9                             MPX20
 10                             CGI20
```

MAP example for table TMSPVC for 20-position TPC with ORDB

```
PVCKEY                                 PVCTAB
_____________________________________________________________
 ORDB 213 CGI20                 (21 TPC 200 MPX20 0)
 ORDB 231 CGI20                (21 ORDB 133 CGI20 0)
 ORDB 100 CGI20                 (21 TPC 100 MPX20 0)
 ORDB 133 CGI20                (21 ORDB 231 CGI20 0)
 TPC  100 MPX20       (1 CC 0 DMS 0)(20 CC 0 DMS 1)
                               (21 ORDB 100 CGI20 0)
 TPC  200 MPX20       (1 CC 0 DMS 0)(20 CC 0 DMS 1)
                               (21 ORDB 213 CGI20 0)
```

MAP example for table TOPSPOS for 20-position TPC with ORDB

```
POSNO        VCCKT VCPDGRP CARDCODE            DATAPATH
                         POSAREA
_____________________________________________________________
  000   TMS 0 0  3   NPDGP   DS1SIG   TMS MP OPP  0  0
        OPR 2 TOPSACD ALL ALL
  001   TMS 0 0  4   NPDGP   DS1SIG   TMS MP OPP  0  1
        OPR 2 TOPSACD ALL ALL
                            *
                            *
                            *
 018   TMS 0 0 21   NPDGP   DS1SIG   TMS MP OPP  0 18
        OPR 2 TOPSACD ALL ALL
019   TMS 0 0 22   NPDGP   DS1SIG   TMS MP OPP  0 19
        OPR 2 TOPSACD ALL ALL
```

TOPS Increased Multiplexing (continued)

MAP example for table TMSPDEV for 20-position TPC with ORDB

```
DEVNAME  TMSNO                  CKTTAB
_____________________________________________________
ORDB  3      0          10 CHNLS  (2)
ORDB  4      0          11 CHNLS  (2)
ORDB 30      0           1 CHNLS (24)
ORDB 40      0           0 CHNLS (24)
```

MAP example for table ISGDEF for 20-position TPC with ORDB

```
ISGNO PMTYPE PMNO SERVICE                          CHNLTAB
_____________________________________________________
0    TMS    0   (TDC)   (3 TDC 56K OFF)(15 TDC 56K OFF)
1    TMS    0   (TDC)  (11 TDC 56K OFF)(15 TDC 56K OFF)
3    TMS    0   (TDC)   (3 TDC 56K OFF)(11 TDC 56K OFF)
```

MAP example for table TDCDEF for 20-position TPC with ORDB

```
ISGNO                          TDCTAB
_____________________________________________________
  0   (3 X25DCEL ORDB 100 CGI20)(15 X25DCEL TPC 100 MPX20)
  1   (11 X25DTEL ORDB 213 CGI20)(15 X25DCEL TPC 200 MPX20)
  3   (3 X25DCEL ORDB 133 CGI20)(11 X25DCEL ORDB 231 CGI20)
```

The TOPS Increased Multiplexing translation process appears in the following flowchart.

MAP example for table SPECCONN for 20-position TPC with ORDB

```
ENDPT1          ENDPT2                  CONTYPE   STATUS
_____________________________________________________________
DCHCHNL   0 15   DS1   TMS   0  0  1   CON       ACTIVE
DCHCHNL   1 15   DS1   TMS   0  0  2   CON       ACTIVE
       *  Direct ORDB database connections *
DCHCHNL   0  3   DS1   TMS   0  1 24   CON       ACTIVE
DCHCHNL   3  3   DS1   TMS   0  0 24   CON       ACTIVE
        * Inter-DCH connections *
DCHCHNL   1 11   DS1   TMS   0 11  2   CON       ACTIVE
DCHCHNL   3 11   DS1   TMS   0 10  2   CON       ACTIVE
```

Optimum internal TMS connectivity for 20-position TPCs This feature can control an increased number of operator positions. The connection of TPCs to the TMS must occur by the best method to make sure load distribution is correct. This action makes sure correct load distribution occurs.

How the DCH cards handle DA traffic determines the message capacity of the DCH cards. Each DCH card can handle the messaging for a maximum of 24 operator positions with DA database access through the TMS. If DA database access through TMS is not available, each DCH card can handle the messaging for a maximum of 48 operator positions.

Note: This feature is for a specified operator position vendor. Control of the DA database communication for this operator position vendor occurs through the MPX LAN. Each DCH card can handle the messaging for a maximum of 48 operator positions.

The correct connectivity to the TMS for TPCs that control 20 operator positions appears in the following figure. This design distributes the load. If a DCH card fails, the DCH card must only handle the messaging for a maximum of 40 operator positions. The failure of a dual DCH card causes the loss of 16 or 20 operator positions.

Note 1: This connectivity diagram is only correct when a DA database connection is not available through TMS. See the "Limits" section of this document for additional information.

Note 2: Each TMS with TPCs that control 20 operator positions can have 96 positions. The addition of a fifth TPC that controls only 16 positions provides the 96 positions. This TMSPVC datafill of this TPC must be the same as the datafill of the 20-position TPCs. The condition allows the TPC to ORDB PVC alignment to remain the same for the complete TMS.

TOPS Increased Multiplexing (continued)

The data links of each TPC are across different DCH cards.

Note: For redundancy, each DCH card connects to each of the two ORDB databases through DCH card-to-DCH card connections.

TMS internal connectivity for 20-position TPCs

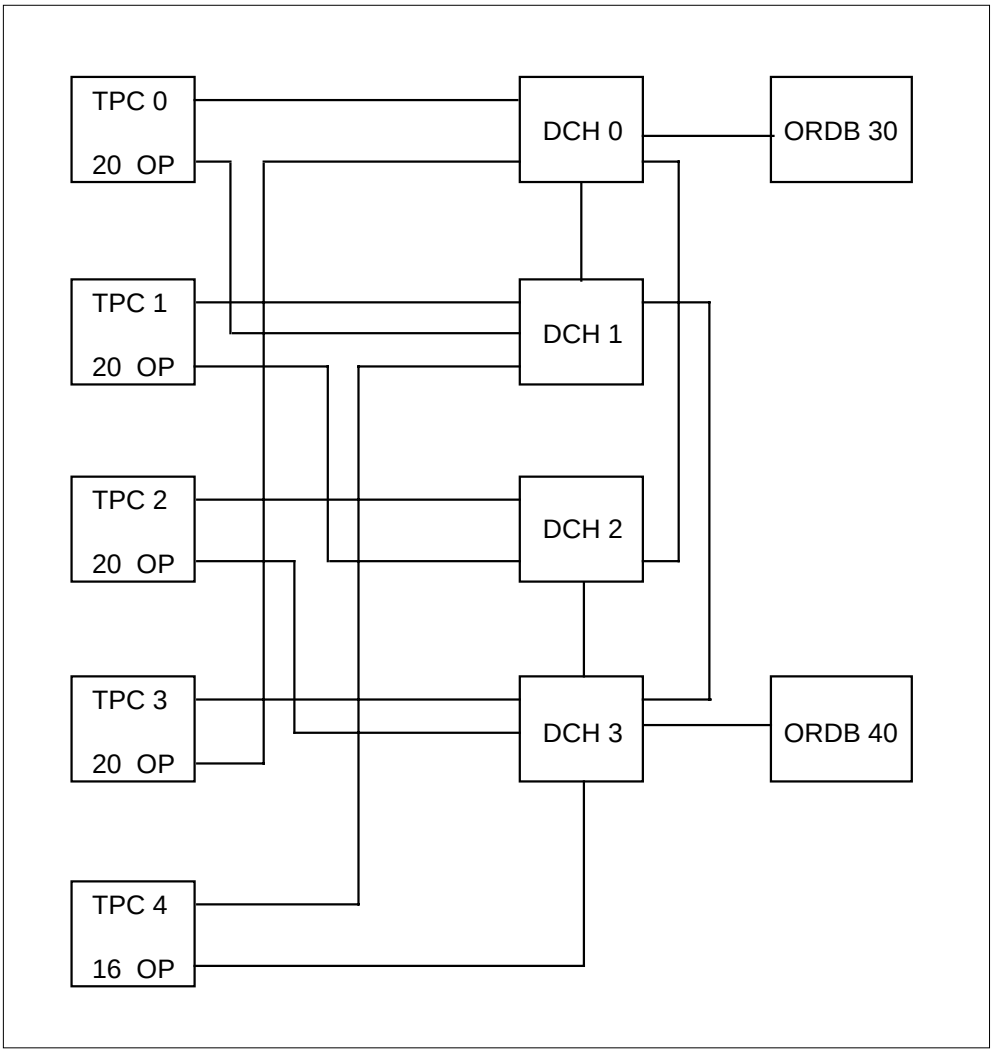

Guidelines for cutting over to 20-position TPCs for TMS without ORDB This feature controls all DA database communication. Control of communication occurs through the LAN of the position and not through the

TOPS Increased Multiplexing (continued)

TMS. The following methods allow gradual cutover of one 20-position TPC at a time:

- a TMS that does not have ORDB connections
- a TMS that has ORDB connections

This section describes the first cutover method. A later section describes the second cutover method.

To cut over a complete TMS, you must BSY the TMS. Add or change the following datafill:

- PVCTYPE
- TMSPVC
- TPCINV
- ISGDEF
- TDCDEF
- SPECCONN

Reconfigure the TPCs and the positions. You must RTS the TMS.

You can cut over from an STD configuration of 4 positions for each TPC to an MPX configuration of 20 positions for each TPC. Use the following procedure to perform this action:

1 Determine 16 positions/4 TPCs on the same DS1 link.

OFFL (INB) the following hardware:

- voice trunks and the positions
- TPCs and ISG channels
- the voice trunks and the positions of a fifth TPC
- the TPC and the associated ISG channels

2 Delete SPECCONN connections that correspond to the deleted TPCs.

3 Nil out TDCDEF datafill that corresponds to the deleted SPECCONN connections. To perform this action, set the associated CHNLDATA of the TDC_CHNL to NILPROT.

4 Delete the 20 positions from TOPSPOS.

5 Delete the five TPCs from TPCINV.

6 Add TPC 0 to table TPCINV. This step appears in the following example. When you perform this step, TPC 0 must be one of the 5 TPCs deleted in the previous step. You can enter any TPC number. This tuple must not be a duplicate tuple. The process uses TPC 0 as an example. In the sample datafill, the TPCs and deleted positions must release the DS1 0 link.

TOPS Increased Multiplexing (continued)

7 Add 20 positions to table TOPSPOS. Place the positions on TPC 0. Enter the TPCPOSNOs from 0 to 19.

8 Reconfigure the data and hardware of the Terminal Position Controller to control 20 operator positions.

9 Add MPX20 to table PVCTYPE.

> ***Note:*** Perform this step one time. The system allows a maximum of one entry in this table.

10 Add the TMSPVC datafill to the 20-position TPC added to TPCINV. This datafill defines PVC layouts for primary and secondary data links. The PVC layout can be TPC 100 MPX20 and TPC 200 MPX20 for TPC 0, or TPC 101 MPX20 and TPC 201 MPX20 for TPC 1.

11 Add TDCDEF datafill for primary and secondary TPC data links with PVC layouts added to TMSPVC.

12 Add SPECCONN datafill for primary and secondary data links defined in TMSPVC. Datafill for each set of primary and secondary data links appears in the following example.

13 RTS all hardware and links.

14 Repeat all steps for each 20-position TPC that you enter in service.

MAP example for table PVCTYPE, with datafill for cutting over to 20-position TPC without ORDB

```
 VALUE                                SYMBOL
_____________________________________________________________
   9                                  MPX20
```

MAP example for table TMSPVC, with datafill for cutting over to 20-position TPC without ORDB

```
PVCKEY                                                  PVCTAB
_____________________________________________________________
 TPC  100 MPX20              (1 CC 0 DMS 0)(20 CC 0 DMS 1)
 TPC  200 MPX20              (1 CC 0 DMS 0)(20 CC 0 DMS 1)
 TPC  101 MPX20              (1 CC 0 DMS 0)(20 CC 0 DMS 1)
 TPC  201 MPX20              (1 CC 0 DMS 0)(20 CC 0 DMS 1)
 TPC  102 MPX20              (1 CC 0 DMS 0)(20 CC 0 DMS 1)
 TPC  202 MPX20              (1 CC 0 DMS 0)(20 CC 0 DMS 1)
 TPC  103 MPX20              (1 CC 0 DMS 0)(20 CC 0 DMS 1)
 TPC  203 MPX20              (1 CC 0 DMS 0)(20 CC 0 DMS 1)
 TPC  104 MPX20              (1 CC 0 DMS 0)(20 CC 0 DMS 1)
 TPC  204 MPX20              (1 CC 0 DMS 0)(20 CC 0 DMS 1)
```

TOPS Increased Multiplexing (continued)

MAP example for table ISGDEF, with datafill cutting over to 20-position TPC without ORDB (continued)

```
ISGNO PMTYPE PMNO SERVICE                                    CHNLTAB
_____________________________________________________________________

 0     TMS    0   (TDC)
               (0 RESERVED)(1 TDC 56K OFF)(2 TDC 56K OFF)
             (3 TDC 56K OFF)(4 TDC 56K OFF)(5 TDC 56K OFF)
             (6 TDC 56K OFF)(7 TDC 56K OFF)(8 TDC 56K OFF)
            (9 TDC 56K OFF)(10 TDC 56K OFF)(11 TDC 56K OFF)
           (12 TDC 56K OFF)(13 TDC 56K OFF)(14 TDC 56K OFF)
           (15 TDC 56K OFF)(16 TDC 56K OFF)(17 TDC 56K OFF)
           (18 TDC 56K OFF)(19 TDC 56K OFF)(20 TDC 56K OFF)
           (21 TDC 56K OFF)(22 TDC 56K OFF)(23 TDC 56K OFF)
           (24 TDC 56K OFF)(25 TDC 56K OFF)(26 TDC 56K OFF)
           (27 TDC 56K OFF)(28 TDC 56K OFF)(29 TDC 56K OFF)
                           (30 TDC 56K OFF)(31 TDC 56K OFF)
 1     TMS    0   (TDC)
               (0 RESERVED)(1 TDC 56K OFF)(2 TDC 56K OFF)
             (3 TDC 56K OFF)(4 TDC 56K OFF)(5 TDC 56K OFF)
             (6 TDC 56K OFF)(7 TDC 56K OFF)(8 TDC 56K OFF)
            (9 TDC 56K OFF)(10 TDC 56K OFF)(11 TDC 56K OFF)
           (12 TDC 56K OFF)(13 TDC 56K OFF)(14 TDC 56K OFF)
           (15 TDC 56K OFF)(16 TDC 56K OFF)(17 TDC 56K OFF)
           (18 TDC 56K OFF)(19 TDC 56K OFF)(20 TDC 56K OFF)
           (21 TDC 56K OFF)(22 TDC 56K OFF)(23 TDC 56K OFF)
           (24 TDC 56K OFF)(25 TDC 56K OFF)(26 TDC 56K OFF)
           (27 TDC 56K OFF)(28 TDC 56K OFF)(29 TDC 56K OFF)
                         (30 TDC 56K OFF)(31 TDC 56K OFF)
2     TMS    0   (TDC)
               (0 RESERVED)(1 TDC 56K OFF)(2 TDC 56K OFF)
             (3 TDC 56K OFF)(4 TDC 56K OFF)(5 TDC 56K OFF)
             (6 TDC 56K OFF)(7 TDC 56K OFF)(8 TDC 56K OFF)
            (9 TDC 56K OFF)(10 TDC 56K OFF)(11 TDC 56K OFF)
           (12 TDC 56K OFF)(13 TDC 56K OFF)(14 TDC 56K OFF)
           (15 TDC 56K OFF)(16 TDC 56K OFF)(17 TDC 56K OFF)
           (18 TDC 56K OFF)(19 TDC 56K OFF)(20 TDC 56K OFF)
           (21 TDC 56K OFF)(22 TDC 56K OFF)(23 TDC 56K OFF)
           (24 TDC 56K OFF)(25 TDC 56K OFF)(26 TDC 56K OFF)
          (27 TDC 56K OFF)(28 TDC 56K OFF)(29 TDC 56K OFF)
                         (30 TDC 56K OFF)(31 TDC 56K OFF)
```

TOPS Increased Multiplexing (continued)

MAP example for table ISGDEF, with datafill for cutting over to 20-position TPC without ORDB (continued)

```
ISGNO PMTYPE PMNO SERVICE                                  CHNLTAB
_____________________________________________________________________

3     TMS    0   (TDC)
               (0 RESERVED)(1 TDC 56K OFF)(2 TDC 56K OFF)
              (3 TDC 56K OFF)(4 TDC 56K OFF)(5 TDC 56K OFF)
              (6 TDC 56K OFF)(7 TDC 56K OFF)(8 TDC 56K OFF)
             (9 TDC 56K OFF)(10 TDC 56K OFF)(11 TDC 56K OFF)
            (12 TDC 56K OFF)(13 TDC 56K OFF)(14 TDC 56K OFF)
            (15 TDC 56K OFF)(16 TDC 56K OFF)(17 TDC 56K OFF)
            (18 TDC 56K OFF)(19 TDC 56K OFF)(20 TDC 56K OFF)
            (21 TDC 56K OFF)(22 TDC 56K OFF)(23 TDC 56K OFF)
            (24 TDC 56K OFF)(25 TDC 56K OFF)(26 TDC 56K OFF)
            (27 TDC 56K OFF)(28 TDC 56K OFF)(29 TDC 56K OFF)
                            (30 TDC 56K OFF)(31 TDC 56K OFF)
```

TOPS Increased Multiplexing (continued)

MAP example for table TDCDEF, with datafill for cutting over to 20-position TPC without ORDB

```
ISGNO                                                    TDCTAB
_____________________________________________________________
0  (1 NILPROT)(2 NILPROT)(3 NILPROT)(4 NILPROT)(5 NILPROT)
   (6 NILPROT)(7 NILPROT)(8 NILPROT)(9 NILPROT)(10 NILPROT)
           (11 NILPROT)(12 NILPROT)(13 NILPROT)(14 NILPROT)
           (15 NILPROT)(16 NILPROT)(17 NILPROT)(18 NILPROT)
           (19 NILPROT)(20 NILPROT)(21 NILPROT)(22 NILPROT)
           (23 NILPROT)(24 NILPROT)(25 NILPROT)(26 NILPROT)
         (27 NILPROT)(28 NILPROT)(29 X25DCEL TPC 100 MPX20)
                    (30 X25DCEL TPC 203 MPX20)(31 NILPROT)
1   (1 NILPROT)(2 NILPROT)(3 NILPROT)(4 NILPROT)(5 NILPROT)
   (6 NILPROT)(7 NILPROT)(8 NILPROT)(9 NILPROT)(10 NILPROT)
           (11 NILPROT)(12 NILPROT)(13 NILPROT)(14 NILPROT)
           (15 NILPROT)(16 NILPROT)(17 NILPROT)(18 NILPROT)
           (19 NILPROT)(20 NILPROT)(21 NILPROT)(22 NILPROT)
           (23 NILPROT)(24 NILPROT)(25 NILPROT)(26 NILPROT)
         (27 NILPROT)(28 NILPROT)(29 X25DCEL TPC 200 MPX20)
       (30 X25DCEL TPC 101 MPX20)(31 X25DCEL TPC 204 MPX20)
2   (1 NILPROT)(2 NILPROT)(3 NILPROT)(4 NILPROT)(5 NILPROT)
   (6 NILPROT)(7 NILPROT)(8 NILPROT)(9 NILPROT)(10 NILPROT)
           (11 NILPROT)(12 NILPROT)(13 NILPROT)(14 NILPROT)
           (15 NILPROT)(16 NILPROT)(17 NILPROT)(18 NILPROT)
           (19 NILPROT)(20 NILPROT)(21 NILPROT)(22 NILPROT)
           (23 NILPROT)(24 NILPROT)(25 NILPROT)(26 NILPROT)
         (27 NILPROT)(28 NILPROT)(29 X25DCEL TPC 201 MPX20)
                    (30 X25DCEL TPC 102 MPX20)(31 NILPROT)
3   (1 NILPROT)(2 NILPROT)(3 NILPROT)(4 NILPROT)(5 NILPROT)
   (6 NILPROT)(7 NILPROT)(8 NILPROT)(9 NILPROT)(10 NILPROT)
           (11 NILPROT)(12 NILPROT)(13 NILPROT)(14 NILPROT)
           (15 NILPROT)(16 NILPROT)(17 NILPROT)(18 NILPROT)
           (19 NILPROT)(20 NILPROT)(21 NILPROT)(22 NILPROT)
           (23 NILPROT)(24 NILPROT)(25 NILPROT)(26 NILPROT)
         (27 NILPROT)(28 NILPROT)(29 X25DCEL TPC 202 MPX20)
       (30 X25DCEL TPC 103 MPX20)(31 X25DCEL TPC 104 MPX20)
```

TOPS Increased Multiplexing (continued)

MAP example for table TPCINV, with datafill for cutting over to 20-position TPC without ORDB

```
TPCNAME  FRTYPE  FRNO   SHPOS  FLOOR   ROW   FRPOS   LOAD
TMSNO   TMSCKTNO   TMSCKTTS   TPCTYPE   RTSTIMR   CLUSTRSZ
_____________________________________________________________
 TPC       0     PCE     0      0      0  AA     0   XX
   0            0   (1)(2)   IBMMPX20       1       20
 TPC       1     PCE     0      0      0  AA     0   XX
   0            1   (1)(2)   IBMMPX20       1       20
 TPC       2     PCE     0      0      0  AA     0   XX
   0            2   (1)(2)   IBMMPX20       1       20
 TPC       3     PCE     0      0       0  AA     0  XX
   0            3   (1)(2)   IBMMPX20       1       20
 TPC       4     PCE     0      0     0  AA     0    XX
   0            4   (1)(2)   IBMMPX16       1       16
```

MAP example for table SPECCONN, with datafill for cutting over to 20-position TPC without ORDB

```
ENDPT1           ENDPT2                  CONTYPE    STATUS
_____________________________________________________________
  * TPC 100 MPX20 and TPC 200 MPX20 *
  DCHCHNL   0 29   DS1   TMS   0  0  1   CON        ACTIVE
  DCHCHNL   1 29   DS1   TMS   0  0  2   CON        ACTIVE
   * TPC 101 MPX20 and TPC 201 MPX20 *
  DCHCHNL   1 30   DS1   TMS   0  1  1   CON        ACTIVE
  DCHCHNL   2 29   DS1   TMS   0  1  2   CON        ACTIVE
   * TPC 102 MPX20 and TPC 202 MPX20 *
  DCHCHNL   2 30   DS1   TMS   0  2  1   CON        ACTIVE
  DCHCHNL   3 29   DS1   TMS   0  2  2   CON        ACTIVE
   * TPC 103 MPX20 and TPC 203 MPX20 *
  DCHCHNL   0 30   DS1   TMS   0  3  1   CON        ACTIVE
  DCHCHNL   3 30   DS1   TMS   0  3  2   CON        ACTIVE
   * TPC 104 MPX20 and TPC 204 MPX20 *
  DCHCHNL   3 31   DS1   TMS   0  4  1   CON        ACTIVE
  DCHCHNL   1 31   DS1   TMS   0  4  2   CON        ACTIVE
```

Guidelines for adding TMS ORDB to TMS with 20-position TPCs

To connect a complete TMS to ORDB, you must BSY the TMS. Add or change the following datafill:

- PVCTYPE
- TMSPVC
- TDCDEF
- TMSPSDEV
- SPECCONN

Connect the TMS to the ORDB database. You must RTS the TMS.

Use the following procedure to connect each 20-position TPC of an INSV TMS to the ORDB database:

1 Add configuration type CGI20 to table PVCTYPE.

2 Define primary and secondary links to the ORDB database in table TMSPSDEV.

3 Add the TMSPVC datafill that defines direct and inter-DCH ORDB links.

4 Add the TDCDEF datafill for direct and inter-DCH ORDB links.

5 Add the SPECCONN datafill that makes connections for direct and inter-DCH ORDB links.

6 Delete SPECCONN datafill for primary and secondary links to the TPC that connects to ORDB. These links can be TPC 100 MPX20 and TPC 200 MPX20, or TPC 101 MPX20 and TPC 201 MPX20.

Note: You must OFFL the TPC and the associated ISG channels to remove SPECCONN datafill.

7 Assign NILPROT to TDCDEF channel data for primary and secondary links that you remove from SPECCONN in the previous step.

8 Change TMSPVC datafill for primary and secondary links that you remove from SPECCONN. The updated datafill for these links defines connection to the ORDB database. This datafill appears in the following example.

9 Add TDCDEF datafill that corresponds to primary and secondary links updated in TMSPVC. To perform this action, replace the datafill that changes to NILPROT. The required datafill for the links appears in the following table.

10 Add the SPECCONN datafill for the primary and secondary data links. To perform this action, replace the deleted datafill. The datafill necessary for the primary and secondary data links of each TPC appears in the following example.

11 Repeat the last 5 steps for each TPC you connect to ORDB.

TOPS Increased Multiplexing (continued)

MAP example for table PVCTYPE, with datafill for adding ORDB to 20-position TPCs

```
VALUE                    SYMBOL
_____________________________________________________
10                       CGI20
```

TOPS Increased Multiplexing (continued)

MAP example for table TMSPVC, with datafill for adding ORDB to 20-position TPCs

```
 PVCKEY                                                          PVCTAB
_____________________________________________________________________
 * Inter-DCH link definitions *
ORDB 213 CGI20                          (21 TPC 200 MPX20 0)
ORDB 231 CGI20                          (21 ORDB 133 CGI20 0)
ORDB 223 CGI20                           (21 TPC 201 MPX20 1)
ORDB 232 CGI20                          (21 ORDB 133 CGI20 1)
ORDB 220 CGI20                           (21 TPC 102 MPX20 2)
ORDB 202 CGI20                          (21 ORDB 100 CGI20 2)
ORDB 210 CGI20    (21 TPC 101 MPX20 1)(21 TPC 204 MPX20 4)
ORDB 201 CGI20  (21 ORDB 100 CGI20 1)(21 ORDB 100 CGI20 4)
          * Direct ORDB Database link definitions *
ORDB 100 CGI20   (21 TPC 100 MPX20 0)(21 ORDB 201 CGI20 1)
                 (21 ORDB 202 CGI20 2)(21 TPC 203 MPX20 3)
                                      (21 ORDB 201 CGI20 4)
ORDB 133 CGI20 (21 ORDB 231 CGI20 0)(21 ORDB 232 CGI20 1)
                   (21 TPC 202 MPX20 2)(21 TPC 103 MPX20 3)
                                       (21 TPC 104 MPX20 4)
TPC  100 MPX20                (1 CC 0 DMS 0)(20 CC 0 DMS 1)
                                      (21 ORDB 100 CGI20 0)
TPC  200 MPX20              (1 CC 0 DMS 0)(20 CC 0 DMS 1)
                                      (21 ORDB 213 CGI20 0)
TPC  101 MPX20              (1 CC 0 DMS 0)(20 CC 0 DMS 1)
                                      (21 ORDB 210 CGI20 1)
TPC  201 MPX20              (1 CC 0 DMS 0)(20 CC 0 DMS 1)
                                      (21 ORDB 223 CGI20 1)
TPC  102 MPX20              (1 CC 0 DMS 0)(20 CC 0 DMS 1)
                                      (21 ORDB 220 CGI20 2)
TPC  202 MPX20              (1 CC 0 DMS 0)(20 CC 0 DMS 1)
                                      (21 ORDB 133 CGI20 2)
TPC  103 MPX20              (1 CC 0 DMS 0)(20 CC 0 DMS 1)
                                      (21 ORDB 133 CGI20 3)
TPC  203 MPX20              (1 CC 0 DMS 0)(20 CC 0 DMS 1)
                                      (21 ORDB 100 CGI20 3)
TPC  104 MPX20              (1 CC 0 DMS 0)(20 CC 0 DMS 1)
                                      (21 ORDB 133 CGI20 4)
TPC  204 MPX20              (1 CC 0 DMS 0)(20 CC 0 DMS 1)
                                      (21 ORDB 210 CGI20 4)
```

TOPS Increased Multiplexing (continued)

MAP example for table TDCDEF, with datafill for adding ORDB to 20-position TPCs

```
ISGNO                                                          TDCTAB
_____________________________________________________________________
0         (1 NILPROT)(2 NILPROT)(3 X25DCEL ORDB 100 CGI20)
                        (4 NILPROT)(5 NILPROT)(6 NILPROT)
            (7 X25DCEL ORDB 201 CGI20)(8 NILPROT)(9 NILPROT)
          (10 NILPROT)(11 X25DCEL ORDB 202 CGI20)(12 NILPROT)
             (13 NILPROT)(14 NILPROT)(15 NILPROT)(16 NILPROT)
             (17 NILPROT)(18 NILPROT)(19 NILPROT)(20 NILPROT)
             (21 NILPROT)(22 NILPROT)(23 NILPROT)(24 NILPROT)
             (25 NILPROT)(26 NILPROT)(27 NILPROT)(28 NILPROT)
         (29 X25DCEL TPC 100 MPX20)(30 X25DCEL TPC 203 MPX20)
                                                  (31 NILPROT)
1    (1 NILPROT)(2 NILPROT)(3 NILPROT)(4 NILPROT)(5 NILPROT)
            (6 NILPROT)(7 X25DTEL ORDB 210 CGI20)(8 NILPROT)
           (9 NILPROT)(10 NILPROT)(11 X25DTEL ORDB 213 CGI20)
             (12 NILPROT)(13 NILPROT)(14 NILPROT)(15 NILPROT)
             (16 NILPROT)(17 NILPROT)(18 NILPROT)(19 NILPROT)
             (20 NILPROT)(21 NILPROT)(22 NILPROT)(23 NILPROT)
             (24 NILPROT)(25 NILPROT)(26 NILPROT)(27 NILPROT)
                       (28 NILPROT)(29 X25DCEL TPC 200 MPX20)
         (30 X25DCEL TPC 101 MPX20)(31 X25DCEL TPC 204 MPX20)
2    (1 NILPROT)(2 NILPROT)(3 NILPROT)(4 NILPROT)(5 NILPROT)
            (6 NILPROT)(7 X25DTEL ORDB 223 CGI20)(8 NILPROT)
           (9 NILPROT)(10 NILPROT)(11 X25DTEL ORDB 220 CGI20)
             (12 NILPROT)(13 NILPROT)(14 NILPROT)(15 NILPROT)
             (16 NILPROT)(17 NILPROT)(18 NILPROT)(19 NILPROT)
             (20 NILPROT)(21 NILPROT)(22 NILPROT)(23 NILPROT)
             (21 NILPROT)(22 NILPROT)(23 NILPROT)(24 NILPROT)
            (25 NILPROT)(26 NILPROT)(27 NILPROT)(28 NILPROT)
         (29 X25DCEL TPC 201 MPX20)(30 X25DCEL TPC 102 MPX20)
                                                  (31 NILPROT)
3            (1 NILPROT)(2 NILPROT)(3 X25DCEL ORDB 133 CGI20)
                           (4 NILPROT)(5 NILPROT)(6 NILPROT)
             (7 X25DCEL ORDB 232 CGI20)(8 NILPROT)(9 NILPROT)
           (10 NILPROT)(11 X25DCEL ORDB 231 CGI20)(12 NILPROT)
             (13 NILPROT)(14 NILPROT)(15 NILPROT)(16 NILPROT)
             (17 NILPROT)(18 NILPROT)(19 NILPROT)(20 NILPROT)
             (21 NILPROT)(22 NILPROT)(23 NILPROT)(24 NILPROT)
             (25 NILPROT)(26 NILPROT)(27 NILPROT)(28 NILPROT)
         (29 X25DCEL TPC 202 MPX20)(30 X25DCEL TPC 103 MPX20)
                                  (31 X25DCEL TPC 104 MPX20)
```

TOPS Increased Multiplexing (continued)

MAP example for table TMSPSDEV, with datafill for adding ORDB to 20-position TPCs

```
  DEVNAME   TMSNO              CKTTAB
 ____________________________________________________
  ORDB 1      0           7 CHNLS (1)
  ORDB 2      0           9 CHNLS (1)
  ORDB 10     0  10 CHNLS (1)(2)(3)(4)
  ORDB 11     0  11 CHNLS (1)(2)(3)(4)
```

MAP example for table SPECCONN, with datafill for adding ORDB to 20-position TPCs

```
ENDPT1           ENDPT2                CONTYPE    STATUS
 ____________________________________________________
  * Direct ORDB Database connections *
 DCHCHNL   0  3   DS1   TMS   0  7  1   CON        ACTIVE
 DCHCHNL   3  3   DS1   TMS   0  9  1   CON        ACTIVE
  * Inter-DCH link connections *
 DCHCHNL   0  7   DS1   TMS   0 11  1   CON        ACTIVE
 DCHCHNL   1  7   DS1   TMS   0 10  1   CON        ACTIVE
 DCHCHNL   0 11   DS1   TMS   0 11  2   CON        ACTIVE
 DCHCHNL   2 11   DS1   TMS   0 10  2   CON        ACTIVE
 DCHCHNL   1 11   DS1   TMS   0 11  3   CON        ACTIVE
 DCHCHNL   3 11   DS1   TMS   0 10  3   CON        ACTIVE
 DCHCHNL   2  7   DS1   TMS   0 11  4   CON        ACTIVE
 DCHCHNL   3  7   DS1   TMS   0 10  4   CON        ACTIVE
  * TPC 100 MPX20 and TPC 200 MPX20 *
 DCHCHNL   0 29   DS1   TMS   0  0  1   CON        ACTIVE
 DCHCHNL   1 29   DS1   TMS   0  0  2   CON        ACTIVE
  *TPC 101 MPX20 and TPC 201 MPX20 *
 DCHCHNL   1 30   DS1   TMS   0  1  1   CON        ACTIVE
 DCHCHNL   2 29   DS1   TMS   0  1  2   CON        ACTIVE
  * TPC 102 MPX20 and TPC 202 MPX20 *
 DCHCHNL   2 30   DS1   TMS   0  2  1   CON        ACTIVE
 DCHCHNL   3 29   DS1   TMS   0  2  2   CON        ACTIVE
  * TPC 103 MPX20 and TPC 203 MPX20 *
 DCHCHNL   0 30   DS1   TMS   0  3  1   CON        ACTIVE
 DCHCHNL   3 30   DS1   TMS   0  3  2   CON        ACTIVE
  * TPC 104 MPX20 and TPC 204 MPX20 *
 DCHCHNL   3 31   DS1   TMS   0  4  1   CON        ACTIVE
 DCHCHNL   1 31   DS1   TMS   0  4  2   CON        ACTIVE
```

TOPS Increased Multiplexing (continued)

Guidelines for cutting over to 20-position TPCs for TMS with ORDB Enter the converted TMS(s) with the “canned TMS datafill". This datafill appears in the latest version of the Translations Application Bulletin (TAB) number 900203, “TMS Configuration and Datafill." This information is in TOPS Message Switch.

This method provides greater detail because you must update the ORDB links to communicate with TPCs. These TPCs handle different numbers of positions. You must remove from service and update the primary and the secondary ORDB links at the same time. This action causes the loss of ORDB services for the TPCs that remain in service. The ORDB services do not return until you update and return to service the ORDB links.

You must convert the 4-position TPCs in a specified order. The following guidelines require that:

- the conversion to the first 20-position TPC use the datafill for TPC-A
- the conversion to the second 20-position TPC use the datafill for TPC-B
- the conversion to the third 20-position TPC use the datafill for TPC-C
- the conversion to the fourth 20-position TPC use the datafill for TPC-D
- the conversion to the fifth 20-position TPC use the datafill for TPC-E

The datafill for each of these TPCs appears in the following guidelines. The system requires fixed ordering because of the detailed datafill changes that each TPC requires.

You can cut over from the STD configuration of 4 positions for each TPC with ORDB to the MPX configuration of 20 positions for each TPC with ORDB. Use the following guidelines and datafill to perform this cut over.

> ***Note:*** To convert from one setup configuration to a second configuration, add TMSPVC datafill. Change TDCDEF datafill. Use this method to convert from a STD configuration to a MPX20 configuration. These datafill changes provide an adjustable set of datafill. You can change this datafill from step to step in the conversion process.

TOPS Increased Multiplexing (continued)

Operating company personnel must use the STD configuration datafill to create a set of TMSPVC TRANS datafill. The STD datafill has the following changes:

- DA PVCs are not available
- The following data entry order is correct:
  - — CC MTC PVC
  - — CC Call Processing PVCs
  - — ORDB PVCs
- The configuration type of TRANS (transition) is a substitute for STD for TPC entries, and CGI4 for ORDB entries.
- Create a duplicate set of TPC entries 200-223. These entries are the same as the TPC 150-173 TRANS entries.

The TMSPVC TRANS beginning set of datafill appears in this module.

To make the necessary TDCDEF changes, change each link in TDCDEF for the converted TMS to a configuration type TRANS (transition). The TDCDEF TRANS beginning set of datafill appears in this module.

Note: For the converted TMS, change each STD and CGI4 in TDCDEF to TRANS. Remove the DCH channels assigned to DA links. Channel data = NILPROT. The TDCDEF allows you to change field CONFIG from or to TRANS. The associated DCH channel is in SPECCONN.

Perform the following procedure before you start the conversion:

1 Determine 4 TPCs/16 positions on the same DS1 and a 5th TPC/4 position on an additional DS1.

2 You must OFFL the TPCs and the ISG channels that correspond to the updated TPC and ORDB links. Remove SPECCONN connections. The removal of TPCs and positions releases a DS1. Use this DS1 to datafill the 20-position TPC and the associated positions.

3 The NILPROT TDCDEF channel data can datafill for connections that you remove in step 1. This action allows you to change TMSPVC tuples.

4 Delete the 20 operator positions from TOPSPOS. The five 4-position TPCs that convert to a 20-position TPC control these positions.

5 Delete the five 4-position TPCs that you OFFL in step 1.

6 Add the 20-position TPC to table TPCINV.

7 Add 20 positions to table TOPSPOS. Place the positions under the added 20-position TPC.

8 Reconfigure the data and hardware for the Terminal Position Controller to control 20 operator positions.

TOPS Increased Multiplexing (continued)

9 Make the following TMSPVC datafill changes for the converted TPC. Examples of converted TPCs are TPC-A and TPC-B. This step changes PVC layouts to define 20-position configurations.

10 Add the required TDCDEF datafill for each TPC. This action builds TPC connections and updated ORDB connections again.

11 Add SPECCONN datafill for each TPC.

12 You must RTS the TPC links and ORDB links.

13 Repeat all steps for each of the five 20-position TPCs. Start at step 1.

After you configure all five TPCs, the TRANS type PVC layout must equal the MPX20/CGI20 type PVC layout. Update the channel data for each DCH channel in table TDCDEF to the MPX20/CGI20 PVC type. Use the same steps you use to convert from the STD type to the TRANS type. Convert configuration type of TRANS to MPX20 for the TPC PVCs and to CGI20 for the ORDB PVCs.

If you must convert another TMS to the 20-position TPC type, change the TRANS type TMSPVC datafill. The datafill must be the same as the 4-position TPC STD configuration type datafill without DA PVCs. To perform this action, copy the STD datafill. Do not copy the DA datafill. Replace STD and CGI4 configuration types with TRANS. This action provides the adjustable base from which to convert the TMS datafill. After you complete this process, start at step 1.

Datafill for TPC-A (1st TPC converted)

The datafill for TPC-A is as follows:

1 For the following specified links, OFFL the TPCs and ISG channels and remove the SPECCONN connections:

- TPC: 100, 150, 105, 155, 106, 156, 112, 162, 118, 168
- ORDB: 100, 133, 213, 231, 223, 232.

2 Delete the 20 operator positions. TPCs 0, 1, 2, 3, and 20 from table TOPSPOS control these positions.

3 Delete TPCs 0, 1, 2, 3, and 20 from TPCINV.

4 Add the 20-position TPC (TPC 0) to table TPCINV.

5 Change TRANS TMSPVC datafill to be the same as the following example for table TMSPVC.

6 Add TDCDEF datafill for the following links:

- TPC: 100, 200
- ORDB: 100, 133, 213, 231, 223, 232.

7 Add the SPECCONN datafill.

TOPS Increased Multiplexing (continued)

MAP example for table TMSPVC, with datafill for cutting over to 20-position TPC-A with ORDB

```
PVCKEY                                                  PVCTAB
_____________________________________________________________
ORDB 213 TRANS                        (21 TPC 200 TRANS 0)
                   (5 TPC 153 TRANS 3)(5 TPC 107 TRANS 7)
                  (5 TPC 109 TRANS 9)(5 TPC 166 TRANS 16)
ORDB 231 TRANS                       (21 ORDB 133 TRANS 0)
                 (5 ORDB 133 TRANS 3)(5 ORDB 133 TRANS 7)
                (5 ORDB 133 TRANS 9)(5 ORDB 133 TRANS 16)
ORDB 223 TRANS     (5 TPC 151 TRANS 1)(5 TPC 154 TRANS 4)
                 (5 TPC 160 TRANS 10)(5 TPC 113 TRANS 13)
                                     (5 TPC 115 TRANS 15)
ORDB 232 TRANS   (5 ORDB 133 TRANS 1)(5 ORDB 133 TRANS 4)
               (5 ORDB 133 TRANS 10)(5 ORDB 133 TRANS 13)
                                    (5 ORDB 133 TRANS 15)
ORDB 210 TRANS    (5 TPC 108 TRANS 8)(5 TPC 110 TRANS 10)
                 (5 TPC 111 TRANS 11)(5 TPC 163 TRANS 13)
                 (5 TPC 169 TRANS 19)(5 TPC 172 TRANS 22)
ORDB 201 TRANS  (5 ORDB 100 TRANS 8)(5 ORDB 100 TRANS 10)
               (5 ORDB 100 TRANS 11)(5 ORDB 100 TRANS 13)
               (5 ORDB 100 TRANS 19)(5 ORDB 100 TRANS 22)
ORDB 220 TRANS    (5 TPC 157 TRANS 7)(5 TPC 114 TRANS 14)
                 (5 TPC 116 TRANS 16)(5 TPC 117 TRANS 17)
                 (5 TPC 170 TRANS 20)(5 TPC 173 TRANS 23)
ORDB 202 TRANS  (5 ORDB 100 TRANS 7)(5 ORDB 100 TRANS 14)
               (5 ORDB 100 TRANS 16)(5 ORDB 100 TRANS 17)
               (5 ORDB 100 TRANS 20)(5 ORDB 100 TRANS 23)
ORDB 100 TRANS    (21 TPC 100 TRANS 0)(5 TPC 101 TRANS 1)
                   (5 TPC 102 TRANS 2)(5 TPC 203 TRANS 3)
                  (5 TPC 104 TRANS 4)(5 ORDB 202 TRANS 7)
                  (5 ORDB 201 TRANS 8)(5 TPC 159 TRANS 9)
               (5 ORDB 201 TRANS 10)(5 ORDB 201 TRANS 11)
                                    (5 ORDB 201 TRANS 13)
                (5 ORDB 202 TRANS 14)(5 TPC 165 TRANS 15)
               (5 ORDB 202 TRANS 16)(5 ORDB 202 TRANS 17)
                                    (5 ORDB 201 TRANS 19)
                (5 ORDB 202 TRANS 20)(5 TPC 171 TRANS 21)
               (5 ORDB 201 TRANS 22)(5 ORDB 202 TRANS 23)
```

TOPS Increased Multiplexing (continued)

MAP example for table TMSPVC, with datafill for cutting over to 20-position TPC-A with ORDB (continued)

```
 PVCKEY                                                          PVCTAB
_____________________________________________________________________
ORDB 133 TRANS   (21 ORDB 231 TRANS 0)(5 ORDB 232 TRANS 1)
                   (5 TPC 152 TRANS 2)(5 ORDB 231 TRANS 3)
                  (5 ORDB 232 TRANS 4)(5 ORDB 231 TRANS 7)
                   (5 TPC 158 TRANS 8)(5 ORDB 231 TRANS 9)
                 (5 ORDB 232 TRANS 10)(5 TPC 161 TRANS 11)
                                       (5 ORDB 232 TRANS 13)
                 (5 TPC 164 TRANS 14)(5 ORDB 232 TRANS 15)
                 (5 ORDB 231 TRANS 16)(5 TPC 167 TRANS 17)
                                        (5 TPC 119 TRANS 19)
                  (5 TPC 120 TRANS 20)(5 TPC 121 TRANS 21)
                  (5 TPC 122 TRANS 22)(5 TPC 123 TRANS 23)
 TPC 100 TRANS               (1 CC 0 DMS 0)(20 CC 0 DMS 1)
                                       (21 ORDB 100 TRANS 0)
 TPC 200 TRANS               (1 CC 0 DMS 0)(20 CC 0 DMS 1)
                                       (21 ORDB 213 TRANS 0)
 **  All other TPC TRANS datafill remains unchanged **
```

TOPS Increased Multiplexing (continued)

MAP example for table TDCDEF, with datafill for cutting over to 20-position TPC-A with ORDB

```
ISGNO                                                    TDCTAB
_____________________________________________________________
 0                    (1 NILPROT)(2 X25DCEL TPC 103 TRANS)
                     (3 X25DCEL ORDB 100 TRANS)(4 NILPROT)
        (5 X25DCEL TPC 101 TRANS)(6 X25DCEL TPC 104 TRANS)
                     (7 X25DCEL ORDB 201 TRANS)(8 NILPROT)
                     (9 X25DCEL TPC 102 TRANS)(10 NILPROT)
                   (11 X25DCEL ORDB 202 TRANS)(12 NILPROT)
                    (13 X25DCEL TPC 159 TRANS)(14 NILPROT)
         (15 NILPROT)(16 NILPROT)(17 X25DCEL TPC 165 TRANS)
                      (18 NILPROT)(19 NILPROT)(20 NILPROT)
         (21 X25DCEL TPC 171 TRANS)(22 NILPROT)(23 NILPROT)
           (24 NILPROT)(25 NILPROT)(26 NILPROT)(27 NILPROT)
                    (28 NILPROT)(29 X25DCEL TPC 100 TRANS)
                                 (30 NILPROT)(31 NILPROT)
 1         (1 NILPROT)(2 X25DCEL TPC 109 TRANS)(3 NILPROT)
                      (4 NILPROT)(5 X25DCEL TPC 107 TRANS)
       (6 X25DCEL TPC 110 TRANS)(7 X25DTEL ORDB 210 TRANS)
                      (8 NILPROT)(9 X25DCEL TPC 108 TRANS)
      (10 X25DCEL TPC 111 TRANS)(11 X25DTEL ORDB 213 TRANS)
         (12 NILPROT)(13 X25DCEL TPC 153 TRANS)(14 NILPROT)
         (15 NILPROT)(16 NILPROT)(17 X25DCEL TPC 166 TRANS)
         (18 X25DCEL TPC 163 TRANS)(19 NILPROT)(20 NILPROT)
       (21 X25DCEL TPC 172 TRANS)(22 X25DCEL TPC 169 TRANS)
           (23 NILPROT)(24 NILPROT)(25 NILPROT)(26 NILPROT)
         (27 NILPROT)(28 NILPROT)(29 X25DCEL TPC 200 TRANS)
                                 (30 NILPROT)(31 NILPROT)
 2         (1 NILPROT)(2 X25DCEL TPC 115 TRANS)(3 NILPROT)
                      (4 NILPROT)(5 X25DCEL TPC 113 TRANS)
       (6 X25DCEL TPC 116 TRANS)(7 X25DTEL ORDB 223 TRANS)
                      (8 NILPROT)(9 X25DCEL TPC 114 TRANS)
      (10 X25DCEL TPC 117 TRANS)(11 X25DTEL ORDB 220 TRANS)
                    (12 NILPROT)(13 X25DCEL TPC 154 TRANS)
         (14 X25DCEL TPC 151 TRANS)(15 NILPROT)(16 NILPROT)
       (17 X25DCEL TPC 160 TRANS)(18 X25DCEL TPC 157 TRANS)
         (19 NILPROT)(20 NILPROT)(21 X25DCEL TPC 173 TRANS)
         (22 X25DCEL TPC 170 TRANS)(23 NILPROT)(24 NILPROT)
           (25 NILPROT)(26 NILPROT)(27 NILPROT)(28 NILPROT)
                      (29 NILPROT)(30 NILPROT)(31 NILPROT)
```

TOPS Increased Multiplexing (continued)

MAP example for table TDCDEF, with datafill for cutting over to 20-position TPC-A with ORDB (continued)

```
ISGNO                                                          TDCTAB
_____________________________________________________________________
3
                     (1 NILPROT)(2 X25DCEL TPC 121 TRANS)
                     (3 X25DCEL ORDB 133 TRANS)(4 NILPROT)
         (5 X25DCEL TPC 119 TRANS)(6 X25DCEL TPC 122 TRANS)
                     (7 X25DCEL ORDB 232 TRANS)(8 NILPROT)
        (9 X25DCEL TPC 120 TRANS)(10 X25DCEL TPC 123 TRANS)
                   (11 X25DCEL ORDB 231 TRANS)(12 NILPROT)
                    (13 NILPROT)(14 X25DCEL TPC 152 TRANS)
          (15 NILPROT)(16 NILPROT)(17 X25DCEL TPC 161 TRANS)
          (18 X25DCEL TPC 158 TRANS)(19 NILPROT)(20 NILPROT)
        (21 X25DCEL TPC 167 TRANS)(22 X25DCEL TPC 164 TRANS)
                      (23 NILPROT)(24 NILPROT)(25 NILPROT)
                      (26 NILPROT)(27 NILPROT)(28 NILPROT)
                       (29 NILPROT)(30 NILPROT)(31 NILPROT
```

MAP example for table SPECCONN, with datafill for cutting over to 20-position TPC-A with ORDB

```
ENDPT1          ENDPT2                      CONTYPE    STATUS
_____________________________________________________________
DCHCHNL   0 29   DS1   TMS   0  0  1   CON        ACTIVE
DCHCHNL   1 29   DS1   TMS   0  0  2   CON        ACTIVE
DCHCHNL   0  3   DS1   TMS   0  7  1   CON        ACTIVE
DCHCHNL   3  3   DS1   TMS   0  9  1   CON        ACTIVE
DCHCHNL   1 11   DS1   TMS   0 11  3   CON        ACTIVE
DCHCHNL   3 11   DS1   TMS   0 10  3   CON        ACTIVE
DCHCHNL   2  7   DS1   TMS   0 11  4   CON        ACTIVE
DCHCHNL   3  7   DS1   TMS   0 10  4   CON        ACTIVE
```

Datafill for TPC-B (2nd TPC converted)

The following datafill is for TPC-B:

1 For the following specified links, OFFL the TPCs and ISG channels. Remove the SPECCONN connections:

- TPC: 101, 151, 107, 157, 111, 161, 113, 163, 119, 169
- ORDB: 100, 133, 213, 231, 223, 232, 210, 201, 220, 202.

2 Delete the 20 operator positions from table TOPSPOS. The TPCs 4, 5, 6, 7, and 21 control these positions.

TOPS Increased Multiplexing (continued)

3 Delete TPCs 4, 5, 6, 7, and 21 from TPCINV.

4 Add the 20-position TPC (TPC 1) to table TPCINV.

5 Change the TRANS TMSPVC datafill to be the same as the following example for table TMSPVC.

6 Add TDCDEF datafill for the following links:

- TPC: 101, 201
- ORDB: 100, 133, 213, 231, 223, 232, 210, 201, 220, 202.

7 Add the SPECCONN datafill.

TOPS Increased Multiplexing (continued)

MAP example for table TMSPVC, with datafill for cutting over to 20-position TPC-B with ORDB

```
PVCKEY                                                          PVCTAB
_____________________________________________________________________
ORDB 213 TRANS     (21 TPC 200 TRANS 0)(5 TPC 153 TRANS 3)
                    (5 TPC 109 TRANS 9)(5 TPC 166 TRANS 16)
ORDB 231 TRANS   (21 ORDB 133 TRANS 0)(5 ORDB 133 TRANS 3)
                  (5 ORDB 133 TRANS 9)(5 ORDB 133 TRANS 16)
ORDB 223 TRANS     (21 TPC 201 TRANS 1)(5 TPC 154 TRANS 4)
                   (5 TPC 160 TRANS 10)(5 TPC 115 TRANS 15)
ORDB 232 TRANS   (21 ORDB 133 TRANS 1)(5 ORDB 133 TRANS 4)
                (5 ORDB 133 TRANS 10)(5 ORDB 133 TRANS 15)
ORDB 210 TRANS     (21 TPC 101 TRANS 1)(5 TPC 108 TRANS 8)
                    (5 TPC 110 TRANS 10)(5 TPC 172 TRANS 22)
ORDB 201 TRANS   (21 ORDB 100 TRANS 1)(5 ORDB 100 TRANS 8)
                (5 ORDB 100 TRANS 10)(5 ORDB 100 TRANS 22)
ORDB 220 TRANS                        (5 TPC 114 TRANS 14)
                   (5 TPC 116 TRANS 16)(5 TPC 117 TRANS 17)
                   (5 TPC 170 TRANS 20)(5 TPC 173 TRANS 23)
ORDB 202 TRANS                         (5 ORDB 100 TRANS 14)
                (5 ORDB 100 TRANS 16)(5 ORDB 100 TRANS 17)
                (5 ORDB 100 TRANS 20)(5 ORDB 100 TRANS 23)
ORDB 100 TRANS   (21 TPC 100 TRANS 0)(21 ORDB 201 TRANS 1)
                     (5 TPC 102 TRANS 2)(5 TPC 203 TRANS 3)
                                         (5 TPC 104 TRANS 4)
                    (5 ORDB 201 TRANS 8)(5 TPC 159 TRANS 9)
                                       (5 ORDB 201 TRANS 10)
                   (5 ORDB 202 TRANS 14)(5 TPC 165 TRANS 15)
                 (5 ORDB 202 TRANS 16)(5 ORDB 202 TRANS 17)
                  (5 ORDB 202 TRANS 20)(5 TPC 171 TRANS 21)
                 (5 ORDB 201 TRANS 22)(5 ORDB 202 TRANS 23)
ORDB 133 TRANS  (21 ORDB 231 TRANS 0)(21 ORDB 232 TRANS 1)
                    (5 TPC 152 TRANS 2)(5 ORDB 231 TRANS 3)
                                        (5 ORDB 232 TRANS 4)
                    (5 TPC 158 TRANS 8)(5 ORDB 231 TRANS 9)
                                       (5 ORDB 232 TRANS 10)
                   (5 TPC 164 TRANS 14)(5 ORDB 232 TRANS 15)
                   (5 ORDB 231 TRANS 16)(5 TPC 167 TRANS 17)
                    (5 TPC 120 TRANS 20)(5 TPC 121 TRANS 21)
                    (5 TPC 122 TRANS 22)(5 TPC 123 TRANS 23)
TPC 101 TRANS                 (1 CC 0 DMS 0)(20 CC 0 DMS 1)
                                       (21 ORDB 210 TRANS 1)
TPC 201 TRANS                 (1 CC 0 DMS 0)(20 CC 0 DMS 1)
                                       (21 ORDB 223 TRANS 1)
    **  All other TPC TRANS datafill remains unchanged **
```

TOPS Increased Multiplexing (continued)

MAP example for table TDCDEF, with datafill for cutting over to 20-position TPC-B with ORDB

```
ISGNO                                                          TDCTAB
_____________________________________________________________________
0                      (1 NILPROT)(2 X25DCEL TPC 103 TRANS)
           (3 X25DCEL ORDB 100 TRANS)(4 NILPROT)(5 NILPROT)
       (6 X25DCEL TPC 104 TRANS)(7 X25DCEL ORDB 201 TRANS)
           (8 NILPROT)(9 X25DCEL TPC 102 TRANS)(10 NILPROT)
                    (11 X25DCEL ORDB 202 TRANS)(12 NILPROT)
                     (13 X25DCEL TPC 159 TRANS)(14 NILPROT)
         (15 NILPROT)(16 NILPROT)(17 X25DCEL TPC 165 TRANS)
                      (18 NILPROT)(19 NILPROT)(20 NILPROT)
         (21 X25DCEL TPC 171 TRANS)(22 NILPROT)(23 NILPROT)
           (24 NILPROT)(25 NILPROT)(26 NILPROT)(27 NILPROT)
                    (28 NILPROT)(29 X25DCEL TPC 100 TRANS)
                                  (30 NILPROT)(31 NILPROT)
1          (1 NILPROT)(2 X25DCEL TPC 109 TRANS)(3 NILPROT)
           (4 NILPROT)(5 NILPROT)(6 X25DCEL TPC 110 TRANS)
                     (7 X25DTEL ORDB 210 TRANS)(8 NILPROT)
                     (9 X25DCEL TPC 108 TRANS)(10 NILPROT)
                   (11 X25DTEL ORDB 213 TRANS)(12 NILPROT)
         (13 X25DCEL TPC 153 TRANS)(14 NILPROT)(15 NILPROT)
         (16 NILPROT)(17 X25DCEL TPC 166 TRANS)(18 NILPROT)
         (19 NILPROT)(20 NILPROT)(21 X25DCEL TPC 172 TRANS)
           (22 NILPROT)(23 NILPROT)(24 NILPROT)(25 NILPROT)
                      (26 NILPROT)(27 NILPROT)(28 NILPROT)
       (29 X25DCEL TPC 200 TRANS)(30 X25DCEL TPC 101 TRANS)
                                               (31 NILPROT)
2          (1 NILPROT)(2 X25DCEL TPC 115 TRANS)(3 NILPROT)
           (4 NILPROT)(5 NILPROT)(6 X25DCEL TPC 116 TRANS)
                     (7 X25DTEL ORDB 223 TRANS)(8 NILPROT)
       (9 X25DCEL TPC 114 TRANS)(10 X25DCEL TPC 117 TRANS)
                   (11 X25DTEL ORDB 220 TRANS)(12 NILPROT)
         (13 X25DCEL TPC 154 TRANS)(14 NILPROT)(15 NILPROT)
            (16 NILPROT)(17 X25DCEL TPC 160 TRANS)(18 X25)
         (19 NILPROT)(20 NILPROT)(21 X25DCEL TPC 173 TRANS)
         (22 X25DCEL TPC 170 TRANS)(23 NILPROT)(24 NILPROT)
           (25 NILPROT)(26 NILPROT)(27 NILPROT)(28 NILPROT)
         (29 X25DCEL TPC 201 TRANS)(30 NILPROT)(31 NILPROT)
```

TOPS Increased Multiplexing (continued)

MAP example for table TDCDEF, with datafill for cutting over to 20-position TPC-B with ORDB (continued)

```
ISGNO                                                          TDCTAB
_____________________________________________________________________
3
                     (1 NILPROT)(2 X25DCEL TPC 121 TRANS)
                     (3 X25DCEL ORDB 133 TRANS)(4 NILPROT)
                      (5 NILPROT)(6 X25DCEL TPC 122 TRANS)
                     (7 X25DCEL ORDB 232 TRANS)(8 NILPROT)
       (9 X25DCEL TPC 120 TRANS)(10 X25DCEL TPC 123 TRANS)
                   (11 X25DCEL ORDB 231 TRANS)(12 NILPROT)
                    (13 NILPROT)(14 X25DCEL TPC 152 TRANS)
                      (15 NILPROT)(16 NILPROT)(17 NILPROT)
         (18 X25DCEL TPC 158 TRANS)(19 NILPROT)(20 NILPROT)
       (21 X25DCEL TPC 167 TRANS)(22 X25DCEL TPC 164 TRANS)
                      (23 NILPROT)(24 NILPROT)(25 NILPROT)
                      (26 NILPROT)(27 NILPROT)(28 NILPROT)
                      (29 NILPROT)(30 NILPROT)(31 NILPROT)
```

MAP example for table SPECCONN, with datafill for cutting over to 20-position TPC-B with ORDB

```
ENDPT1          ENDPT2                      CONTYPE    STATUS
_____________________________________________________________
DCHCHNL   1 30  DS1   TMS   0  1  1   CON        ACTIVE
DCHCHNL   2 29  DS1   TMS   0  1  2   CON        ACTIVE
DCHCHNL   0  3  DS1   TMS   0  7  1   CON        ACTIVE
DCHCHNL   3  3  DS1   TMS   0  9  1   CON        ACTIVE
DCHCHNL   0  7  DS1   TMS   0 11  1   CON        ACTIVE
DCHCHNL   1  7  DS1   TMS   0 10  1   CON        ACTIVE
DCHCHNL   0 11  DS1   TMS   0 11  2   CON        ACTIVE
DCHCHNL   2 11  DS1   TMS   0 10  2   CON        ACTIVE
DCHCHNL   1 11  DS1   TMS   0 11  3   CON        ACTIVE
DCHCHNL   3 11  DS1   TMS   0 10  3   CON        ACTIVE
DCHCHNL   2  7  DS1   TMS   0 11  4   CON        ACTIVE
DCHCHNL   3  7  DS1   TMS   0 10  4   CON        ACTIVE
```

Datafill for TPC-C (3rd TPC converted)

The following datafill is for TPC-C:

1 For the following specified links, OFFL the TPCs and the ISG channels. Remove the SPECCONN connections:

- TPC: 102, 152, 108, 158, 114, 164, 117, 167, 120, 170
- ORDB: 100, 133, 210, 201, 220, 202.

2 Delete the 20 operator positions from table TOPSPOS. The TPCs 8, 9, 10, 11, and 22 control these positions.

3 Delete TPCs 8, 9, 10, 11, and 22 from TPCINV.

4 Add the 20-position TPC (TPC 2) to table TPCINV.

5 Change the TRANS TMSPVC datafill to be the same as the following example for table TMSPVC.

6 Add TDCDEF datafill for the following links:

- TPC: 102, 202
- ORDB: 100, 133, 210, 201, 220, 202.

7 Add the SPECCONN datafill.

TOPS Increased Multiplexing (continued)

MAP example for table TMSPVC, with datafill for cutting over to 20-position TPC-C with ORDB

```
 PVCKEY                                                          PVCTAB
_____________________________________________________________________
ORDB 213 TRANS     (21 TPC 200 TRANS 0)(5 TPC 153 TRANS 3)
                    (5 TPC 109 TRANS 9)(5 TPC 166 TRANS 16)
ORDB 231 TRANS   (21 ORDB 133 TRANS 0)(5 ORDB 133 TRANS 3)
                  (5 ORDB 133 TRANS 9)(5 ORDB 133 TRANS 16)
ORDB 223 TRANS    (21 TPC 201 TRANS 1)(5 TPC 154 TRANS 4)
                   (5 TPC 160 TRANS 10)(5 TPC 115 TRANS 15)
ORDB 232 TRANS  (21 ORDB 133 TRANS 1)(5 ORDB 133 TRANS 4)
                (5 ORDB 133 TRANS 10)(5 ORDB 133 TRANS 15)
ORDB 210 TRANS                        (21 TPC 101 TRANS 1)
                  (5 TPC 110 TRANS 10)(5 TPC 172 TRANS 22)
ORDB 201 TRANS                       (21 ORDB 100 TRANS 1)
                (5 ORDB 100 TRANS 10)(5 ORDB 100 TRANS 22)
ORDB 220 TRANS    (21 TPC 102 TRANS 2)(5 TPC 116 TRANS 16)
                   (5 TPC 170 TRANS 20)(5 TPC 173 TRANS 23)
ORDB 202 TRANS  (21 ORDB 100 TRANS 2)(5 ORDB 100 TRANS 16)
                (5 ORDB 100 TRANS 20)(5 ORDB 100 TRANS 23)
ORDB 100 TRANS   (21 TPC 100 TRANS 0)(21 ORDB 201 TRANS 1)
                  (21 ORDB 202 TRANS 2)(5 TPC 203 TRANS 3)
                    (5 TPC 104 TRANS 4)(5 TPC 159 TRANS 9)
                  (5 ORDB 201 TRANS 10)(5 TPC 165 TRANS 15)
                  (5 ORDB 202 TRANS 16)(5 TPC 171 TRANS 21)
                (5 ORDB 201 TRANS 22)(5 ORDB 202 TRANS 23)
ORDB 133 TRANS  (21 ORDB 231 TRANS 0)(21 ORDB 232 TRANS 1)
                  (21 TPC 202 TRANS 2)(5 ORDB 231 TRANS 3)
                  (5 ORDB 232 TRANS 4)(5 ORDB 231 TRANS 9)
                (5 ORDB 232 TRANS 10)(5 ORDB 232 TRANS 15)
                 (5 ORDB 231 TRANS 16)(5 TPC 121 TRANS 21)
                  (5 TPC 122 TRANS 22)(5 TPC 123 TRANS 23)
TPC 102 TRANS                (1 CC 0 DMS 0)(20 CC 0 DMS 1)
                                    (21 ORDB 220 TRANS 2)
TPC 202 TRANS                (1 CC 0 DMS 0)(20 CC 0 DMS 1)
                                    (21 ORDB 133 TRANS 2)
  **  All other TPC TRANS datafill remains unchanged **
```

TOPS Increased Multiplexing (continued)

MAP example for table TDCDEF, with datafill for cutting over to 20-position TPC-C with ORDB

```
ISGNO                                                   TDCTAB
_____________________________________________________________
0                     (1 NILPROT)(2 X25DCEL TPC 103 TRANS)
           (3 X25DCEL ORDB 100 TRANS)(4 NILPROT)(5 NILPROT)
       (6 X25DCEL TPC 104 TRANS)(7 X25DCEL ORDB 201 TRANS)
                        (8 NILPROT)(9 NILPROT)(10 NILPROT)
                   (11 X25DCEL ORDB 202 TRANS)(12 NILPROT)
         (13 X25DCEL TPC 159 TRANS)(14 NILPROT)(15 NILPROT)
         (16 NILPROT)(17 X25DCEL TPC 165 TRANS)(18 NILPROT)
         (19 NILPROT)(20 NILPROT)(21 X25DCEL TPC 171 TRANS)
           (22 NILPROT)(23 NILPROT)(24 NILPROT)(25 NILPROT)
                      (26 NILPROT)(27 NILPROT)(28 NILPROT)
         (29 X25DCEL TPC 100 TRANS)(30 NILPROT)(31 NILPROT)
1          (1 NILPROT)(2 X25DCEL TPC 109 TRANS)(3 NILPROT)
           (4 NILPROT)(5 NILPROT)(6 X25DCEL TPC 110 TRANS)
           (7 X25DTEL ORDB 210 TRANS)(8 NILPROT)(9 NILPROT)
        (10 NILPROT)(11 X25DTEL ORDB 213 TRANS)(12 NILPROT)
         (13 X25DCEL TPC 153 TRANS)(14 NILPROT)(15 NILPROT)
         (16 NILPROT)(17 X25DCEL TPC 166 TRANS)(18 NILPROT)
         (19 NILPROT)(20 NILPROT)(21 X25DCEL TPC 172 TRANS)
           (22 NILPROT)(23 NILPROT)(24 NILPROT)(25 NILPROT)
                      (26 NILPROT)(27 NILPROT)(28 NILPROT)
       (29 X25DCEL TPC 200 TRANS)(30 X25DCEL TPC 101 TRANS)
                                                (31 NILPROT)
2          (1 NILPROT)(2 X25DCEL TPC 115 TRANS)(3 NILPROT)
           (4 NILPROT)(5 NILPROT)(6 X25DCEL TPC 116 TRANS)
           (7 X25DTEL ORDB 223 TRANS)(8 NILPROT)(9 NILPROT)
        (10 NILPROT)(11 X25DTEL ORDB 220 TRANS)(12 NILPROT)
         (13 X25DCEL TPC 154 TRANS)(14 NILPROT)(15 NILPROT)
         (16 NILPROT)(17 X25DCEL TPC 160 TRANS)(18 NILPROT)
         (19 NILPROT)(20 NILPROT)(21 X25DCEL TPC 173 TRANS)
           (22 NILPROT)(23 NILPROT)(24 NILPROT)(25 NILPROT)
                      (26 NILPROT)(27 NILPROT)(28 NILPROT)
       (29 X25DCEL TPC 201 TRANS)(30 X25DCEL TPC 102 TRANS)
                                                (31 NILPROT)
```

TOPS Increased Multiplexing (continued)

MAP example for table TDCDEF, with datafill for cutting over to 20-position TPC-C with ORDB (continued)

```
ISGNO                                                          TDCTAB
_____________________________________________________________________
3                      (1 NILPROT)(2 X25DCEL TPC 121 TRANS)
            (3 X25DCEL ORDB 133 TRANS)(4 NILPROT)(5 NILPROT)
        (6 X25DCEL TPC 122 TRANS)(7 X25DCEL ORDB 232 TRANS)
            (8 NILPROT)(9 NILPROT)(10 X25DCEL TPC 123 TRANS)
          (11 X25DCEL ORDB 231 TRANS)(12 NILPROT)(13 NILPROT)
            (14 NILPROT)(15 NILPROT)(16 NILPROT)(17 NILPROT)
            (18 NILPROT)(19 NILPROT)(20 NILPROT)(21 NILPROT)
            (22 NILPROT)(23 NILPROT)(24 NILPROT)(25 NILPROT)
                        (26 NILPROT)(27 NILPROT)(28 NILPROT)
           (29 X25DCEL TPC 202 TRANS)(30 NILPROT)(31 NILPROT)
```

MAP example for table SPECCONN, with datafill for cutting over to 20-position TPC-C with ORDB

```
ENDPT1          ENDPT2                      CONTYPE    STATUS
_____________________________________________________________
DCHCHNL   2 30  DS1   TMS   0  2  1   CON        ACTIVE
DCHCHNL   3 29  DS1   TMS   0  2  2   CON        ACTIVE
DCHCHNL   0  3  DS1   TMS   0  7  1   CON        ACTIVE
DCHCHNL   3  3  DS1   TMS   0  9  1   CON        ACTIVE
DCHCHNL   0  7  DS1   TMS   0 11  1   CON        ACTIVE
DCHCHNL   1  7  DS1   TMS   0 10  1   CON        ACTIVE
DCHCHNL   0 11  DS1   TMS   0 11  2   CON        ACTIVE
DCHCHNL   2 11  DS1   TMS   0 10  2   CON        ACTIVE
```

Datafill for TPC-D (4th TPC converted)

The following datafill is for TPC-D:

1 For the following specified links, OFFL the TPCs and ISG channels and remove the SPECCONN connections:

- TPC: 103, 153, 109, 159, 115, 165, 121, 171, 123, 173
- ORDB: 100, 133, 213, 231, 223, 232, 220, 202.

2 Delete the 20 operator positions from table TOPSPOS. The TPCs 12, 13, 14, 15, and 23 control these positions.

3 Delete TPCs 12, 13, 14, 15, and 23 from TPCINV.

4 Add the 20-position TPC (TPC 3) to table TPCINV.

5 Change the TRANS TMSPVC datafill to be the same as the following example for table TMSPVC.

6 Add TDCDEF datafill for the following links:

- TPC: 103, 203
- ORDB: 100, 133, 213, 231, 223, 232, 220, 202.

7 Add the SPECCONN datafill.

MAP example for table TMSPVC, with datafill for cutting over to 20-position TPC-D with ORDB

```
PVCKEY                                                          PVCTAB
_____________________________________________________________________
ORDB 213 TRANS    (21 TPC 200 TRANS 0)(5 TPC 166 TRANS 16)
ORDB 231 TRANS  (21 ORDB 133 TRANS 0)(5 ORDB 133 TRANS 16)
ORDB 223 TRANS    (21 TPC 201 TRANS 1)(5 TPC 154 TRANS 4)
                                       (5 TPC 160 TRANS 10)
ORDB 232 TRANS   (21 ORDB 133 TRANS 1)(5 ORDB 133 TRANS 4)
                                      (5 ORDB 133 TRANS 10)
ORDB 210 TRANS                         (21 TPC 101 TRANS 1)
                  (5 TPC 110 TRANS 10)(5 TPC 172 TRANS 22)
ORDB 201 TRANS                        (21 ORDB 100 TRANS 1)
                (5 ORDB 100 TRANS 10)(5 ORDB 100 TRANS 22)
ORDB 220 TRANS    (21 TPC 102 TRANS 2)(5 TPC 116 TRANS 16)
                                       (5 TPC 170 TRANS 20)
ORDB 202 TRANS  (21 ORDB 100 TRANS 2)(5 ORDB 100 TRANS 16)
                                      (5 ORDB 100 TRANS 20)
ORDB 100 TRANS   (21 TPC 100 TRANS 0)(21 ORDB 201 TRANS 1)
                 (21 ORDB 202 TRANS 2)(21 TPC 203 TRANS 3)
                  (5 TPC 104 TRANS 4)(5 ORDB 201 TRANS 10)
                (5 ORDB 202 TRANS 16)(5 ORDB 201 TRANS 22)
ORDB 133 TRANS  (21 ORDB 231 TRANS 0)(21 ORDB 232 TRANS 1)
                  (21 TPC 202 TRANS 2)(21 TPC 103 TRANS 3)
                 (5 ORDB 232 TRANS 4)(5 ORDB 232 TRANS 10)
                 (5 ORDB 231 TRANS 16)(5 TPC 122 TRANS 22)
TPC 103 TRANS                (1 CC 0 DMS 0)(20 CC 0 DMS 1)
                                       (21 ORDB 133 TRANS 3)
TPC 203 TRANS                (1 CC 0 DMS 0)(20 CC 0 DMS 1)
                                      (21 ORDB 100 TRANS 3)
    **  All other TPC TRANS datafill remains unchanged **
```

TOPS Increased Multiplexing (continued)

MAP example for table TDCDEF, with datafill for cutting over to 20-position TPC-D with ORDB

```
 ISGNO                                                    TDCTAB
_____________________________________________________________________
0
        (1 NILPROT)(2 NILPROT)(3 X25DCEL ORDB 100 TRANS)
           (4 NILPROT)(5 NILPROT)(6 X25DCEL TPC 104 TRANS)
           (7 X25DCEL ORDB 201 TRANS)(8 NILPROT)(9 NILPROT)
         (10 NILPROT)(11 X25DCEL ORDB 202 TRANS)(12 NILPROT)
           (13 NILPROT)(14 NILPROT)(15 NILPROT)(16 NILPROT)
           (17 NILPROT)(18 NILPROT)(19 NILPROT)(20 NILPROT)
           (21 NILPROT)(22 NILPROT)(23 NILPROT)(24 NILPROT)
           (25 NILPROT)(26 NILPROT)(27 NILPROT)(28 NILPROT)
       (29 X25DCEL TPC 100 TRANS)(30 X25DCEL TPC 203 TRANS)
                                                (31 NILPROT)
1
             (1 NILPROT)(2 NILPROT)(3 NILPROT)(4 NILPROT)
                      (5 NILPROT)(6 X25DCEL TPC 110 TRANS)
           (7 X25DTEL ORDB 210 TRANS)(8 NILPROT)(9 NILPROT)
         (10 NILPROT)(11 X25DTEL ORDB 213 TRANS)(12 NILPROT)
           (13 NILPROT)(14 NILPROT)(15 NILPROT)(16 NILPROT)
          (17 X25DCEL TPC 166 TRANS)(18 NILPROT)(19 NILPROT)
          (20 NILPROT)(21 X25DCEL TPC 172 TRANS)(22 NILPROT)
            (23 NILPROT)(24 NILPROT)(25 NILPROT)(26 NILPROT)
          (27 NILPROT)(28 NILPROT)(29 X25DCEL TPC 200 TRANS)
                     (30 X25DCEL TPC 101 TRANS)(31 NILPROT)
2
             (1 NILPROT)(2 NILPROT)(3 NILPROT)(4 NILPROT)
                      (5 NILPROT)(6 X25DCEL TPC 116 TRANS)
           (7 X25DTEL ORDB 223 TRANS)(8 NILPROT)(9 NILPROT)
         (10 NILPROT)(11 X25DTEL ORDB 220 TRANS)(12 NILPROT)
          (13 X25DCEL TPC 154 TRANS)(14 NILPROT)(15 NILPROT)
          (16 NILPROT)(17 X25DCEL TPC 160 TRANS)(18 NILPROT)
            (19 NILPROT)(20 NILPROT)(21 NILPROT)(22 NILPROT)
            (23 NILPROT)(24 NILPROT)(25 NILPROT)(26 NILPROT)
          (27 NILPROT)(28 NILPROT)(29 X25DCEL TPC 201 TRANS)
```

MAP example for table TDCDEF, with datafill for cutting over to 20-position TPC-D with ORDB (continued)

```
3
         (1 NILPROT)(2 NILPROT)(3 X25DCEL ORDB 133 TRANS)
           (4 NILPROT)(5 NILPROT)(6 X25DCEL TPC 122 TRANS)
           (7 X25DCEL ORDB 232 TRANS)(8 NILPROT)(9 NILPROT)
        (10 NILPROT)(11 X25DCEL ORDB 231 TRANS)(12 NILPROT)
           (13 NILPROT)(14 NILPROT)(15 NILPROT)(16 NILPROT)
           (17 NILPROT)(18 NILPROT)(19 NILPROT)(20 NILPROT)
           (21 NILPROT)(22 NILPROT)(23 NILPROT)(24 NILPROT)
           (25 NILPROT)(26 NILPROT)(27 NILPROT)(28 NILPROT)
       (29 X25DCEL TPC 202 TRANS)(30 X25DCEL TPC 103 TRANS)
                                                (31 NILPROT)
```

MAP example for table XXX, with datafill for cutting over to 20-position TPC-D with ORDB

```
ENDPT1            ENDPT2                  CONTYPE    STATUS
_________________________________________________________
DCHCHNL   0 30    DS1   TMS   0  3  1    CON        ACTIVE
DCHCHNL   3 30    DS1   TMS   0  3  2    CON        ACTIVE
DCHCHNL   0  3    DS1   TMS   0  7  1    CON        ACTIVE
DCHCHNL   3  3    DS1   TMS   0  9  1    CON        ACTIVE
DCHCHNL   0 11    DS1   TMS   0 11  2    CON        ACTIVE
DCHCHNL   2 11    DS1   TMS   0 10  2    CON        ACTIVE
DCHCHNL   1 11    DS1   TMS   0 11  3    CON        ACTIVE
DCHCHNL   3 11    DS1   TMS   0 10  3    CON        ACTIVE
DCHCHNL   2  7    DS1   TMS   0 11  4    CON        ACTIVE
DCHCHNL   3  7    DS1   TMS   0 10  4    CON        ACTIVE
```

Datafill for TPC-E (5th TPC converted)

The following datafill is for TPC-E:

1 For the following specified links, OFFL the TPCs and ISG channels. Remove the SPECCONN connections:

- TPC: 104, 154, 110, 160, 116, 166, 122, 172
- ORDB: 100, 133, 210, 201, 220, 202, 213, 231, 223, 232.

2 Delete the 20 operator positions from table TOPSPOS. The TPCs 16, 17, 18, and 19 control these positions.

3 Delete TPCs 16, 17, 18, and 19 from TPCINV.

4 Add the 20-position TPC (TPC 4) to table TPCINV.

TOPS Increased Multiplexing (continued)

5 Change the TRANS TMSPVC datafill to be the same as the following example for table TMSPVC.

6 Add TDCDEF datafill for the following links:

- TPC: 104, 204
- ORDB: 100, 133, 210, 201, 220, 202, 213, 231, 223, 232.

7 Add the SPECCONN datafill.

MAP example for table TMSPVC, with datafill for cutting over to 20-position TPC-E with ORDB

```
PVCKEY                                                          PVCTAB
_____________________________________________________________________
ORDB 213 TRANS                          (21 TPC 200 TRANS 0)
ORDB 231 TRANS                         (21 ORDB 133 TRANS 0)
ORDB 223 TRANS                           (21 TPC 201 TRANS 1)
ORDB 232 TRANS                          (21 ORDB 133 TRANS 1)
ORDB 210 TRANS    (21 TPC 101 TRANS 1)(21 TPC 204 TRANS 4)
ORDB 201 TRANS  (21 ORDB 100 TRANS 1)(21 ORDB 100 TRANS 4)
ORDB 220 TRANS                           (21 TPC 102 TRANS 2)
ORDB 202 TRANS                          (21 ORDB 100 TRANS 2)
ORDB 100 TRANS   (21 TPC 100 TRANS 0)(21 ORDB 201 TRANS 1)
                 (21 ORDB 202 TRANS 2)(21 TPC 203 TRANS 3)
                                        (21 ORDB 201 TRANS 4)
ORDB 133 TRANS  (21 ORDB 231 TRANS 0)(21 ORDB 232 TRANS 1)
                  (21 TPC 202 TRANS 2)(21 TPC 103 TRANS 3)
                                        (21 TPC 104 TRANS 4)
TPC 104 TRANS               (1 CC 0 DMS 0)(20 CC 0 DMS 1)
                                        (21 ORDB 133 TRANS 4)
TPC 204 TRANS                (1 CC 0 DMS 0)(20 CC 0 DMS 1)
                                        (21 ORDB 210 TRANS 4)
   **  All other TPC TRANS datafill remains unchanged **
```

TOPS Increased Multiplexing (continued)

MAP example for table TDCDEF, with datafill for cutting over to 20-position TPC-E with ORDB

```
ISGNO                                                          TDCTAB
_____________________________________________________________________
0
         (1 NILPROT)(2 NILPROT)(3 X25DCEL ORDB 100 TRANS)
                           (4 NILPROT)(5 NILPROT)(6 NILPROT)
           (7 X25DCEL ORDB 201 TRANS)(8 NILPROT)(9 NILPROT)
        (10 NILPROT)(11 X25DCEL ORDB 202 TRANS)(12 NILPROT)
           (13 NILPROT)(14 NILPROT)(15 NILPROT)(16 NILPROT)
           (17 NILPROT)(18 NILPROT)(19 NILPROT)(20 NILPROT)
           (21 NILPROT)(22 NILPROT)(23 NILPROT)(24 NILPROT)
           (25 NILPROT)(26 NILPROT)(27 NILPROT)(28 NILPROT)
       (29 X25DCEL TPC 100 TRANS)(30 X25DCEL TPC 203 TRANS)
                                                 (31 NILPROT)
1
  (1 NILPROT)(2 NILPROT)(3 NILPROT)(4 NILPROT)(5 NILPROT)
           (6 NILPROT)(7 X25DTEL ORDB 210 TRANS)(8 NILPROT)
         (9 NILPROT)(10 NILPROT)(11 X25DTEL ORDB 213 TRANS)
           (12 NILPROT)(13 NILPROT)(14 NILPROT)(15 NILPROT)
           (16 NILPROT)(17 NILPROT)(18 NILPROT)(19 NILPROT)
           (20 NILPROT)(21 NILPROT)(22 NILPROT)(23 NILPROT)
           (24 NILPROT)(25 NILPROT)(26 NILPROT)(27 NILPROT)
                    (28 NILPROT)(29 X25DCEL TPC 200 TRANS)
       (30 X25DCEL TPC 101 TRANS)(31 X25DCEL TPC 204 TRANS)
2
    (1 NILPROT)(2 NILPROT)(3 NILPROT)(4 NILPROT)(5 NILPROT)
           (6 NILPROT)(7 X25DTEL ORDB 223 TRANS)(8 NILPROT)
         (9 NILPROT)(10 NILPROT)(11 X25DTEL ORDB 220 TRANS)
           (12 NILPROT)(13 NILPROT)(14 NILPROT)(15 NILPROT)
           (16 NILPROT)(17 NILPROT)(18 NILPROT)(19 NILPROT)
           (20 NILPROT)(21 NILPROT)(22 NILPROT)(23 NILPROT)
           (24 NILPROT)(25 NILPROT)(26 NILPROT)(27 NILPROT)
                    (28 NILPROT)(29 X25DCEL TPC 201 TRANS)
                    (30 X25DCEL TPC 102 TRANS)(31 NILPROT)
3
         (1 NILPROT)(2 NILPROT)(3 X25DCEL ORDB 133 TRANS)
                           (4 NILPROT)(5 NILPROT)(6 NILPROT)
           (7 X25DCEL ORDB 232 TRANS)(8 NILPROT)(9 NILPROT)
        (10 NILPROT)(11 X25DCEL ORDB 231 TRANS)(12 NILPROT)
           (13 NILPROT)(14 NILPROT)(15 NILPROT)(16 NILPROT)
           (17 NILPROT)(18 NILPROT)(19 NILPROT)(20 NILPROT)
           (21 NILPROT)(22 NILPROT)(23 NILPROT)(24 NILPROT)
           (25 NILPROT)(26 NILPROT)(27 NILPROT)(28 NILPROT)
       (29 X25DCEL TPC 202 TRANS)(30 X25DCEL TPC 103 TRANS)
                                 (31 X25DCEL TPC 104 TRANS)
```

TOPS Increased Multiplexing (continued)

MAP example for table SPECCONN, with datafill for cutting over to 20-position TPC-E with ORDB

```
  ENDPT1            ENDPT2                  CONTYPE    STATUS
 ____________________________________________________________
DCHCHNL   3 31   DS1   TMS   0  4  1   CON        ACTIVE
DCHCHNL   1 31   DS1   TMS   0  4  2   CON        ACTIVE
DCHCHNL   0  3   DS1   TMS   0  7  1   CON        ACTIVE
DCHCHNL   3  3   DS1   TMS   0  9  1   CON        ACTIVE
DCHCHNL   0  7   DS1   TMS   0 11  1   CON        ACTIVE
DCHCHNL   1  7   DS1   TMS   0 10  1   CON        ACTIVE
DCHCHNL   0 11   DS1   TMS   0 11  2   CON        ACTIVE
DCHCHNL   2 11   DS1   TMS   0 10  2   CON        ACTIVE
DCHCHNL   1 11   DS1   TMS   0 11  3   CON        ACTIVE
DCHCHNL   3 11   DS1   TMS   0 10  3   CON        ACTIVE
DCHCHNL   2  7   DS1   TMS   0 11  4   CON        ACTIVE
DCHCHNL   3  7   DS1   TMS   0 10  4   CON        ACTIVE
```

Mixed cluster sizes

The system only supports 4, 16 and 20-position cluster sizes. For cluster sizes 5 to 16, enter data for 16 positions. For 17 to 20 cluster sizes, enter data for 20 positions. Use only the required number of positions in the cluster.

Mixed cluster sizes can occur on a TMS. To set up mixed cluster sizes, use the cut over procedures to convert specified TPCs on a TMS. Do not convert all TPCs on a TMS. This action can result in any required group of 4, 16, and/or 20-position cluster sizes. Use the formulas from SEB 93-03-002 to check if the system supports this arrangement. The first time you can enter data in table TMSPVC, you can specify all cluster sizes. These sizes are 4, 16, and 20.

For example, use “Guidelines for cutting over to 16-position TPCs for TMS without ORDB" to convert only 1 TPC. This action results in one 16-position cluster. The rest of the clusters are 4-position clusters. The datafill that results appears in the “Datafill for a 16-position TPC without TMS ORDB" section. This information follows.

The following entry appears in table PVCTYPE.

MAP example for table PVCTYPE, with datafill for 16-position TPC without ORDB

```
          VALUE                          SYMBOL
       ----------------------------------------
           7                             MPX16
```

TOPS Increased Multiplexing (continued)

In table TMSPVC, the addition of the following tuples for the two datalinks to TPC 0 occurs.

MAP example for table TMSPVC, with datafill for 16-position TPC without ORDB

```
PVCKEY                                                    PVCTAB
-----------------------------------------------------------------
TPC  100 MPX16                (1 CC 0 DMS 0)(16 CC 0 DMS 1)
TPC  200 MPX16                (1 CC 0 DMS 0)(16 CC 0 DMS 1)
```

In table TPCINV, the deletion of tuples for TPC 0 through TPC 3 occurs. The following tuple for TPC 0 replaces the deleted tuples.

MAP example for table TPCINV, with datafill for 16-position TPC without ORDB

```
    TPCNAME FRTYPE FRNO SHPOS FLOOR ROW FRPOS LOAD
  TMSNO TMSCKTNO TMSCKTTS TPCTYPE RTSTIMR CLUSTRSZ
 ------------------------------------------------
    TPC   0    PCE    0     0     0  AA     0   XX
      0      0     (1)(2)  IBMMPX16    1      16
```

In table TOPSPOS, the deletion of the 16 positions assigned to TPC 0 through TPC 3 occurs. The assignment of these positions to TPC 0 occurs again.

MAP example for table TOPSPOS, with datafill for 16-position TPC without ORDB

```
 POSNO        VCCKT VCPDGRP CARDCODE            DATAPATH
                    POSAREA
-------------------------------------------------------------
  000   TMS 0 0  3   NPDGP   DS1SIG   TMS MP OPP   0  0
        OPR 2 TOPSACD ALL ALL
  001   TMS 0 0  4   NPDGP   DS1SIG   TMS MP OPP   0  1
        OPR 2 TOPSACD ALL ALL
                           *
                           *
                           *
  014   TMS 0 0 17   NPDGP   DS1SIG   TMS MP OPP   0 14
        OPR 2 TOPSACD ALL ALL
  015   TMS 0 0 18   NPDGP   DS1SIG   TMS MP OPP   0 15
        OPR 2 TOPSACD ALL ALL
```

TOPS Increased Multiplexing (continued)

Table TMSPSDEV does not contain entries because the ORDB is not available.

MAP example for table TMSPSDEV, with datafill for 16-position TPC without ORDB

```
          DEVNAME  TMSNO                 CKTTAB
        ------------------------------------------
                **  nothing datafilled  **
```

The datafill for table ISGDEF does not change.

MAP example for table ISGDEF, with datafill for 16-position TPC without ORDB

```
  ISGNO   PMTYPE  PMNO   SERVICE              CHNLTAB
 ---------------------------------------------------------
      0      TMS     0     (TDC)         (15 TDC 56K OFF)
      2      TMS     0     (TDC)         (15 TDC 56K OFF)
```

In table TDCDEF, the 8 datalinks for deleted TPCs 0 to 3 were nilled out. Each TPC has two links. This action occurs by changing the channel data to NILPROT. The addition of the following primary and secondary datalinks for TPC 0 occurs.

MAP example for table TDCDEF, with datafill for 16-position TPC without ORDB

```
   ISGNO                                          TDCTAB
 ---------------------------------------------------------
    0                          (15 X25DCEL TPC 100 MPX16)
    2                          (15 X25DCEL TPC 200 MPX16)
```

In table SPECCONN, the 8 datalinks for deleted TPCs 0 to 3 were nilled out. This action occurs by changing data to NILPROT The addition of the following tuples for the primary and secondary datalinks for TPC 0 occurs.

MAP example for table SPECCONN, with datafill for 16-position TPC without ORDB

```
  ENDPT1           ENDPT2                 CONTYPE   STATUS
 ---------------------------------------------------------
  DCHCHNL   0 15   DS1   TMS   0  0  1   CON       ACTIVE
  DCHCHNL   2 15   DS1   TMS   0  0  2   CON       ACTIVE
```

TOPS Increased Multiplexing (continued)

TMS to TPC Configuration

This feature affects the connection between a TMS and the TPCs that subtend the TMS. A TPC can use this feature to control a maximum of 20 operator positions. The total number of operator positions that subtend a TMS does not increase. Adding an increased number of positions on each TPC reduces the hardware facilities. Hardware facilities include DS-1 links.

The Enhanced TMS to TPC configuration appears in the following figure.

Enhanced TMS-to-TPC configuration

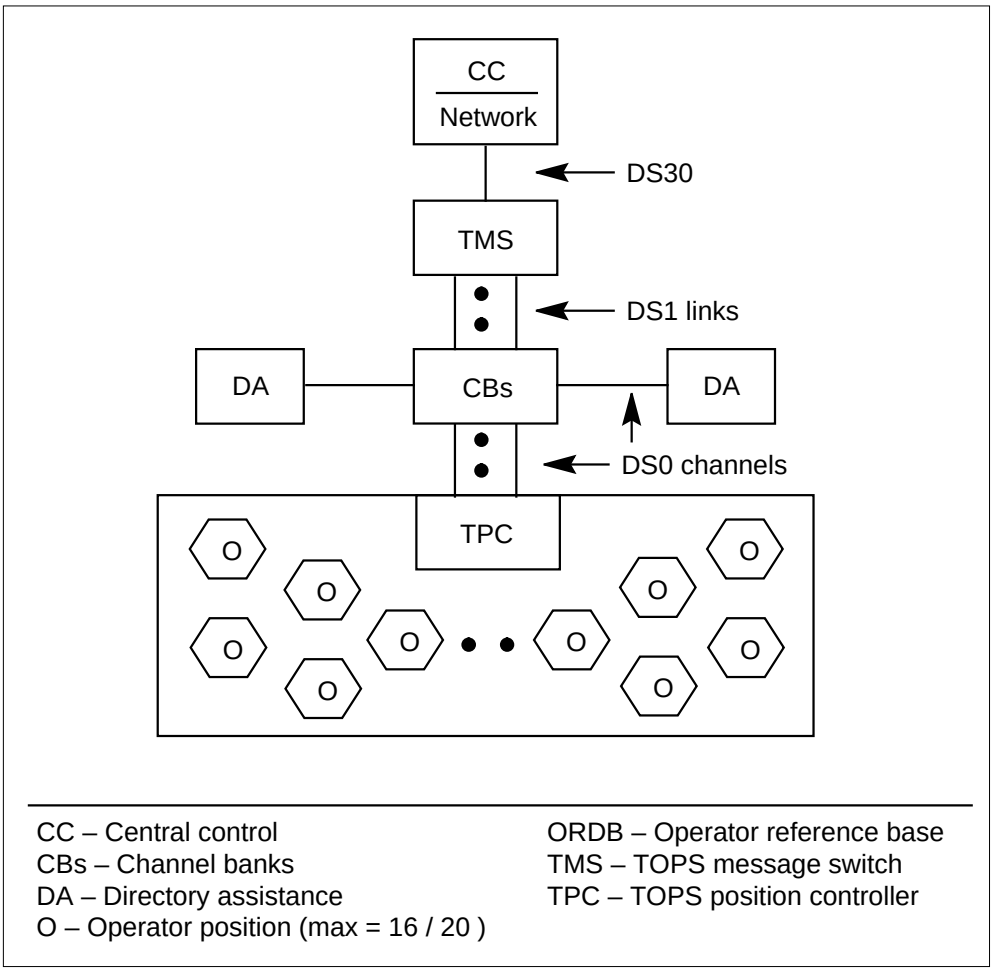

TOPS Increased Multiplexing (continued)

Table MTCFAIL - Maintenance failure messages

The failure of a maintenance process at an operator position causes the system to generate error messages. These error messages appear in table MTCFAIL. Failures can occur when:

- a failed attempt to RTS an operator position occurs
- a request that is not solicited from the position to BSY occurs

The system places the error message in the TOPS 115 MP Maintenance log output. If a user manually initiated the failed RTS attempt, the system does not include this message in the log. The message appears at the MAP.

An error code received from the position indexes the table. The failed RTS attempt error code is in the Result field of the Incoming Solicited Maintenance Message. The request to BSY is in the Incoming Unsolicited Maintenance Message.

An operator position vendor uses this table. You can divide this table in numeric ranges because many possible vendors are available. Each range corresponds to a different position vendor. This division allows an office that uses operator positions from different vendors to perform the following actions:

- to receive an error code from any position
- to locate the associated text string that defines the received error code value

> ***Note:*** Only the TOPS MP operator positions of Northern Telecom can use the first 50 (0-49) error code values. These values cannot change.

Sample datafill appears in the following example.

MAP example for table MTCFAIL

```
ERRCODE                         ERRTEXT
_____________________________________________________
52                              AUDIT_CARD_NOT_RESPONDING
145                             SELF_TEST_DIAGNOSTICS_FAILED
```

Table MTCTEST - Maintenance test failure messages

The failure of a maintenance test process at an operator position causes the system to generate error messages. These messages appear in table MTCTEST. An example of this type of test is a keyboard test. When a maintenance test process fails, the system sends an error code value from the position to the CC. The CC is in the Incoming Solicited Maintenance

Message. The system includes the error message in the AUDT 131 MP Diagnostics log output. The system does not include this information if a user manually initiates the failed test. When this action occurs, the text string appears at the MAP.

An operator position vendor uses this table. You can divide this table in numeric ranges because many operator positions vendors are present. Each numeric range corresponds to a different position vendor. This ability allows an office that uses operator positions from different vendors to perform the following actions:

- receive an error code from any position
- locate the associated text string that defines the received error code value

> ***Note:*** Only TOPS MP operator positions of Northern Telecom can use the error code values 101, 201-306, 401-411. You cannot change these values cannot change.

Sample datafill appears in the following example.

MAP example for table MTCTEST

```
ERRCODE                          ERRTEXT
-------------------------------------------------------
101                              SOFTWARE_ERROR_WITH_TPC
228                              CC_DATA_WAS_LOST_DURING_TEST
411                              ERROR_IN_KEYBOARD_TEST
```

Translations table flow

The TOPS Increased Multiplexing translations tables appear in the following flowchart.

TOPS Increased Multiplexing (continued)

Table flow for TOPS Increased Multiplexing

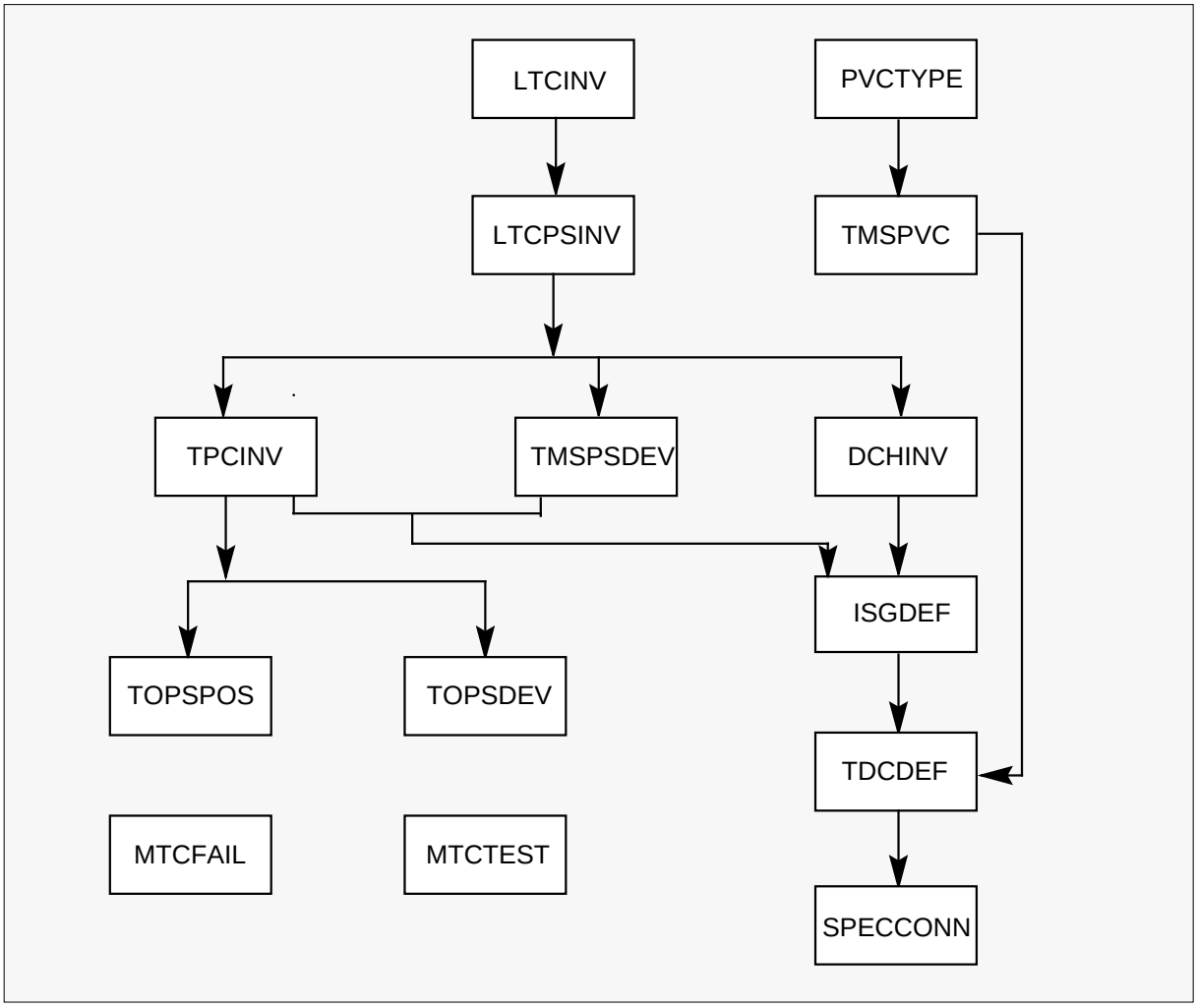

Limits

The following limits apply to TOPS Increased Multiplexing:

- The distribution of the voice and data links of one TPC across five DS-1 links saves costs. This distribution saves the cost of a sixth DS-1 link for the 16-position TPC layout. The loss of one DS-1 link that contains the data links of two 16-position TPCs causes the loss of data. The loss of to 32 operator positions occurs
- This feature allows you to enter more than four operator positions on a Terminal Position Controller (TPC). The limit of a maximum of four TOPS Multi-Purpose (MP) operator positions for each TOPS Position Controller applies. The system does not enforce this limit in the software.

The operating company must make sure that one TOPS Position Controller has a maximum of four TOPS MP positions. The TOPS MP positions have TPCPOSNO in the range 0 to 3.

- When you add the first TPC to a DS1, the DS1 first must be OFFL. If you use a DS-1 only for voice before you add the first TPC, remove the voice links from service. OFFL the DS1. You can add the first TPC.
- Enter the PVC layout types in table PVCTYPE before you enter table TMSPVC. You must perform this action because the enhanced table key of TMSPVC includes a PVC layout type. You cannot delete a configuration type in PVCTYPE if this type is in TMSPVC. The system does not enforce this restriction through software. The operating company must enforce this limit.
- This feature can enter more than 4 positions for each TPC. When this action occurs, the ordering of CC MTC and CC call processing PVCs in a TMSPVC layout is important. The minimum requirement for TPC entries in TMSPVC is a CC MTC PVC and CC call processing PVCs. You must define these layouts first for TPC configurations that attempt to define more than 4 positions for a TPC. You must define these layouts in the specified order.
- The ability to tailor PVC layouts for each TPC basis is not correct for TOPS Position Controllers. The TOPS position controllers control TOPS MP operator positions. The TOPS position controllers require the previous, fixed PVC layouts. The fixed PVC layouts have the following order:
  - 4 DA PVCs
  - 5 ORDB PVCs
  - 1 CC MTC PVC
  - 4 CC call processing PVCs
- The guidelines for the current TMSPVC numbering plan make the datafill easier to track and understand. The system does not enforce the devised numbering plan through table control.
- The DH cards can handle DA traffic. This action determines the message capacity of the DCH cards. Each DCH card can handle the messaging for a maximum of 24 operator positions with DA database access through the TMS. The operator positions do not always have DA database access through the TMS. When this condition occurs, each DCH card can handle the messaging for a maximum of 48 operator positions. An operator position vendor that controls all DA database communication requires this feature. The DA database communication occurs through the LAN of the

TOPS Increased Multiplexing (continued)

position and not through the TMS. Each DCH card of the vendor can handle the messaging for a maximum of 48 operator positions.

- The TMS Internal Connectivity layout for 20-position TPCs appears in this module. This diagram is only correct when the TPCs do not require any connection to a DA database through TMS. A single D-Channel Handler (DCH) card can fail in the TMS. When this failure occurs, the associated traffic load can exceed the maximum acceptable traffic load that a DCH card can handle. The traffic load routes to two of the three DCH cards. This failure only occurs when a DA database connects through the TMS.
- The following actions occur when you upgrade from pre-BCS35 to BCS35:
  - — The system restores all non-canned TMSPVC and TDCDEF datafill with the CONFIG field value of NOT_USED.
  - — The system replaces the TDCDEF entries that contain TPC 1 as a nil value with NILPROT. The NILPROT value is the correct datafill for the definition of a nil layout.

    Note: To determine canned TMSPVC and TDCDEF datafill, refer to the latest BCS34 version of the Translations Application Bulletin (TAB) number 900203, “TMS Configuration and Datafill." The system considers any additional TMSPVC or TDCDEF datafill as non-canned. TAB 900203 is in the TOPS DA Subtending TMS, OSB00101, feature product description of this manual.

- A PVC layout from TMSPVC can have the same CTYPE and VERSION. You cannot enter this type of layout more than one time in table TDCDEF for the same TMS.
- Before this feature, Computer Generation Industry (CGI) allotted one ORDB maintenance (ORDB MTC) PVC for every 4 ORDB Call Processing PVCs. The CGI is the current ORDB database vendor. The CGI must develop this feature to allow the operating company to vary the ratio of ORDB Call Processing PVCs for each ORDB MTC PVC. The CGI must make this improvement to allow this feature to communicate properly with the CGI ORDB database.

  Note: This feature also applies to other ORDB vendors other than CGI.

- Only Northern Telecom (Nortel) can use the first 50 entries (0-49) in the new table MTCFAIL to enter error code descriptions. These descriptions are for current and future error conditions that can occur in the TOPS Multi-Purpose (MP) operator positions.

- Only Nortel can use error code values 101, 201-306, and 401-411 in table MTCTEST. Nortel uses these codes to enter error code descriptions for current and future error conditions. These conditions occur in the TOPS Multi-Purpose (MP) operator positions.
- Table control I/O does not accept blanks as literal characters. Use underscores (_) to create a text string in tables MTCFAIL and MTCTEST. Enter the input with quotes (') to:
  - — input the special characters of the keyboard. Examples of these character are $, #, %, and, etc.
  - — display lowercase characters in the defined error text strings
- When you create a PVC layout for a specified TPC, all or none of the subtending positions of the TCP contain the specified PVCs. For example, you can enter a TPC that controls 16 positions for DA PVCs. When this condition occurs, all 16 positions have a DA PVC. You cannot enter some of the positions with DA PVCs and some positions without DA PVCs.
- Layouts are engineered for 4, 16, and 20-operator position LAN cluster sizes. Optimal DCH loading and other engineering guidelines were examined when these layouts were engineered. These layouts are the only layouts that the system supports for this feature. You must decrease the possibility of the degradation of system performance when you use one of the gradual cut-over methods. To perform this action, complete the cut-over in an acceptable time frame. The description of operations section describes these methods.

Interactions

This package requires TOPS DA Subtending TMS, OSB00101.

Activation/deactivation by the end user

The TOPS Increased Multiplexing feature does not require activation or deactivation by the end user.

Billing

The TOPS Increased Multiplexing feature does not affect billing.

Station Message Detail Recording

The TOPS Increased Multiplexing feature does not affect Station Message Detail Recording.

Datafilling office parameters

The TOPS Increased Multiplexing feature does not affect office parameters.

TOPS Increased Multiplexing (continued)

Datafilling table TMSPSDEV

Datafill for TOPS Increased Multiplexing table TMSPSDEV appears in the following table. The fields that apply to TOPS Increased Multiplexing appear in this table. See the data schema section of this document for a description of the other fields.

Datafilling table TMSPSDEV

Field	Subfield or refinement	Entry	Explanation and action
			This table does not change.

Datafill example for table TMSPSDEV

Sample datafill for table TMSPSDEV appears in the following example.

MAP example for table TMSPSDEV

```
 DEVNAME  TMSNO                 CKTTAB
_____________________________________________________
ORDB  1      0                10 CHNLS  (1)
ORDB  2      0                11 CHNLS  (1)
ORDB 10      0                1 CHNLS (24)
ORDB 20      0                0 CHNLS (24)
```

Datafill sequence

The tables that require datafill to activate TOPS Increased Multiplexing appear in the following table. The tables appear in the correct entry order.

Datafill requirements for TOPS Increased Multiplexing

Table	Purpose of table
TMSPSDEV	TOPS Message Switch P-Side Device. This table defines device and TMS port and channels.
TPCINV	TOPS Position Controller Inventory. This table defines TPC type and timeout for RTS of TPC.
PVCTYPE	This table defines PVC layout configuration type.
TMSPVC	TOPS Message Switch Permanent Virtual Circuit. This table adds PVC layout defined in PVCTYPE.
ISGDEF	ISDN Service Group Definition. This table defines DCH service and channel data.

TOPS Increased Multiplexing (continued)

Datafill requirements for TOPS Increased Multiplexing

Table	Purpose of table
TDCDEF	TOPS Message Switch Data Channel Definition. This table defines parameters for TMS data channel
SPECCONN	P-Side to P-Side Special Connection. This table defines special connections on XPM.
TOPSPOS	TOPS Position. This table determines if you can enter more than 4 positions on a TPC.
TOPSDEV	TOPS Device. This table determines if you can enter more than 4 positions on a TPC.
MTCFAIL	This table defines fail messages for positions.
MTCTEST	This table defines fail messages for position maintenance tests.

Datafilling table TPCINV

Datafill for TOPS Increased Multiplexing for table TPCINV appears in the following table. The fields that apply to TOPS Increased Multiplexing appear in this table. See the data schema section of this document for a description of the other fields.

Datafilling table TPCINV

Field	Subfield or refinement	Entry	Explanation and action
TPCTYPE		A maximum of 8 characters	Defines the TPC type. You can enter a maximum of 8 characters for this field. The default is NT_TPC.
RTSTIMR		1-31 s	Defines wait time for RTS of operator position. If the RTS is not successful after this period, the system reports the RTS as a failure.
CLUSTRSZ		0-20	The PRSDOC BK03287 in package TMS added this field. This value is the maximum number of operator positions that the TPC controls.

Datafill example for table TPCINV

Sample datafill for table TPCINV appears in the following example.

TOPS Increased Multiplexing (continued)

MAP example for table TPCINV

```
 TPCNAME FRTYPE FRNO SHPOS FLOOR ROW FRPOS LOAD
TMSNO TMSCKTNO TMSCKTTS  TPCTYPE RTSTIMR CLUSTRSZ
_____________________________________________________
 TPC    0    PCE    0     0     0  AA     0   XX
          0         0   (1)(2) IBMMPX16       1        16
 TPC    1    PCE    0     0     0  AA     0   XX
          0         1   (1)(2)   NT_TPC      21         4
 TPC    2    PCE    0     0     0  AA     0   XX
          0         2   (1)(2) IBMMPX20       1        20
```

Datafilling table PVCTYPE

Datafill for TOPS Increased Multiplexing for table PVCTYPE appears in the following table. The fields that apply to TOPS Increased Multiplexing appear in this table. See the data schema of this document for a description of the other fields.

Datafilling table PVCTYPE

Field	Subfield or refinement	Entry	Explanation and action
VALUE		0-31	Table key.
SYMBOL		A maximum of 32 characters	PVC design for each tuple defined in table TMSPVC. This value is key to table TMSPVC, field CONFIG. The first 6 default entries are: • TRANS - Used in cutover methods. • DMS - Used for each CC PVC layout that TMSPVC defines. • STD - Used for TPC and DA PVC layouts for the CCI configuration. • CGI4 - Used for ORDB PVC layouts for the CCI TEG - Used for TPC and DA PVC designs for IBM TEG configuration. • CGI_TEG - Used for ORDB PVC layouts for the IBM TEG configuration.

Datafill example for table PVCTYPE

Sample datafill for table PVCTYPE appears in the following example.

TOPS Increased Multiplexing (continued)

MAP example for table PVCTYPE

```
          VALUE                          SYMBOL
_______________________________________________________
             0                            TRANS
             1                              DMS
             2                              STD
             3                             CGI4
             4                              TEG
             5                          CGI_TEG
             6                         NOT_USED
             7                            MPX16
             8                            CGI16
             9                            MPX20
             10                            CGI20
```

Datafilling table TMSPVC

Datafill for TOPS Increased Multiplexing for table TMSPVC appears in the following table. The fields that apply to TOPS Increased Multiplexing appear in this table. See the data schema section of this document for a description of the other fields.

Datafilling table TMSPVC

Field	Subfield or refinement	Entry	Explanation and action
PVCKEY	CONFIG	refer to subfield	Type of PVC layout. This subfield follows subfields CTYPE and VERSION. Table PVCTYPE, field SYMBOL must contain this value. You can add, delete and change tuples. You cannot change or delete tuple entries if the entries are in table TDCDEF.

Datafill example for table TMSPVC

Sample datafill for table TMSPVC appears in the following table.

TOPS Increased Multiplexing (continued)

MAP example for table TMSPVC

```
PVCKEY                                                    PVCTAB
_____________________________________________________________________
 ORDB 223 CGI16                          (17 TPC 200 MPX16 0)
 ORDB 232 CGI16                         (17 ORDB 133 CGI16 0)
 ORDB 100 CGI16                          (17 TPC 100 MPX16 0)
 ORDB 133 CGI16                         (17 ORDB 232 CGI16 0)
 TPC  100 MPX16
        (1 CC 0 DMS 0)(16 CC 0 DMS 1)(17 ORDB 100 CGI16 0)
 TPC  200 MPX16
        (1 CC 0 DMS 0)(16 CC 0 DMS 1)(17 ORDB 223 CGI16 0)
```

Datafilling table ISGDEF

Datafill for TOPS Increased Multiplexing for table ISGDEF appears in the following table. The fields that apply to TOPS Increased Multiplexing appear in this table. See the data schema section of this document for a description of the other fields.

Datafilling table ISGDEF

Field	Subfield or refinement	Entry	Explanation and action
			This table does not change.

Datafill example for table ISGDEF

Sample datafill for table ISGDEF appears in the following example.

MAP example for table ISGDEF

```
ISGNO PMTYPE PMNO SERVICE                                   CHNLTAB
_____________________________________________________________________
  0    TMS    0   (TDC)   (3 TDC 56K OFF)(15 TDC 56K OFF)
  2    TMS    0   (TDC)   (7 TDC 56K OFF)(15 TDC 56K OFF)
  3    TMS    0   (TDC)    (3 TDC 56K OFF)(7 TDC 56K OFF)
  0    TMS    0   (TDC)   (3 TDC 56K OFF)(15 TDC 56K OFF)
```

Datafilling table TDCDEF

Datafill for TOPS Increased Multiplexing for table TDCDEF appears in the following table. The fields that apply to TOPS Increased Multiplexing appear

in this table. See the data schema section of this document for a description of the other fields.

Datafilling table TDCDEF

Field	Subfield or refinement	Entry	Explanation and action
CONFIG			Type of PVC layout. This field follows field VERSION. This field does not appear if the value in field PRTCLPAR is NILPROT. This field appears for all other values in PRTCLPAR. Table PVCTYPE, field SYMBOL must contain the value in this field (CONFIG). You can only enter PVC layout from table TMSPVC with the same CTYPE and VERSION one time for the same TMS.

Datafill example for table TDCDEF

Sample datafill for table TDCDEF appears in the following example.

MAP example for table TDCDEF

```
 ISGNO                                                    TDCTAB
_____________________________________________________________________
0    (1 X25DCEL TPC 100 STD)(2 X25DCEL TPC 103 STD)
                        (3 X25DCEL ORDB 100 CGI4)(4 NILPROT)
              (5 X25DCEL TPC 101 STD)(6 X25DCEL TPC 104 STD)
                        (7 X25DCEL ORDB 201 CGI4)(8 NILPROT)
             (9 X25DCEL TPC 102 STD)(10 X25DCEL TPC 105 STD)
                      (11 X25DCEL ORDB 202 CGI4)(12 NILPROT)
            (13 X25DCEL TPC 209 STD)(14 X25DCEL TPC 206 STD)
            (15 NILPROT)(16 NILPROT)(17 X25DCEL TPC 215 STD)
             (18 X25DCEL TPC 212 STD)(19 NILPROT)(20 NILPROT)
            (21 X25DCEL TPC 221 STD)(22 X25DCEL TPC 218 STD)
              (23 NILPROT)(24 NILPROT)(25 X25DCEL DA 10 STD)
              (26 X25DCEL DA 20 STD)(27 NILPROT)(28 NILPROT)
                        (29 NILPROT)(30 NILPROT)(31 NILPROT)
```

Datafilling table SPECCONN

Datafill for TOPS Increased Multiplexing for table SPECCONN appears in the following table. The fields that apply to TOPS Increased Multiplexing appear

TOPS Increased Multiplexing (continued)

in this table. See the data schema section of this document for a description of the other fields.

Datafilling table SPECCONN

Field	Subfield or refinement	Entry	Explanation and action
			This table does not change.

Datafill example for table SPECCONN

Sample datafill for table SPECCONN appears in the following table.

MAP example for table SPECCONN

```
ENDPT1           ENDPT2                  CONTYPE   STATUS
_____________________________________________________________
DCHCHNL   0 15   DS1   TMS   0  0  1   CON       ACTIVE
DCHCHNL   2 15   DS1   TMS   0  0  2   CON       ACTIVE
   * Direct ORDB database connections *
DCHCHNL   0  3   DS1   TMS   0  1 24   CON       ACTIVE
DCHCHNL   3  3   DS1   TMS   0  0 24   CON       ACTIVE
    * Inter-DCH connections *
DCHCHNL   2  7   DS1   TMS   0 11  1   CON       ACTIVE
DCHCHNL   3  7   DS1   TMS   0 10  1   CON       ACTIVE
```

Datafilling table TOPSPOS

Datafill for TOPS Increased Multiplexing for table TOPSPOS appears in the following table. The fields that apply to TOPS Increased Multiplexing appear

in this table. See the data schema section of this document for a description of the other fields.

Datafilling table TOPSPOS

Field	Subfield or refinement	Entry	Explanation and action
TPCNO		0-254	When you enter an MP operator position or device on a TPC, the MP and TPC must connect to the same TMS. If the MP and TPC do not connect to the same TMS, the system blocks the entry. The system generates an error message.
TPCPOSNO		0-19	This field appears when DATAPATH field DATATYPE=TMS. The range for field TPCPOSNO changes from 0-3 to 0-19 when this package is present. You can enter a maximum of 20 operator positions for a TPC that subtends a TMS. The range 0-95 appears when you list the range at the MAP. The system only allows numbers in the range 0-19. Without this package, the range is 0-3.

Datafill example for table TOPSPOS

Sample datafill for table TOPSPOS appears in the following example.

MAP example for table TOPSPOS

```
POSNO         VCCKT VCPDGRP CARDCODE              DATAPATH
                            POSAREA
_____________________________________________________________
015   TMS 0 0 17   NPDGP   DS1SIG   TMS MP OPP   0 14
           OPR 2 TOPSACD ALL ALL
016   TMS 0 0 18   NPDGP   DS1SIG   TMS MP OPP   0 15
           OPR 2 TOPSACD ALL ALL
```

TOPS Increased Multiplexing (continued)

Error messages for table TOPSPOS

The following error messages apply to table TOPSPOS.

Error messages for table TOPSPOS

Error message	Explanation and action
`THE POSITION NUMBER MUST BE IN THE RANGE (0-19).`	When this package is present and you attempt to enter an operator position number in field TPCPOSNO that exceeds 19.
`THE POSITION NUMBER MUST BE IN THE RANGE (0-3).`	When this package is not present and you attempt to enter an operator position number in field TPCPOSNO that exceeds 3.
The MP and the TPC must be on the same TMS.	When this package is present and you attempt to enter an MP on a TPC. This TPC does not connect to the TMS to which the MP connects. The MP you attempt to enter can be an operator position or device.

Datafilling table TOPSDEV

Datafill for TOPS Increased Multiplexing for table TOPSDEV appears in the following table. The fields that apply to TOPS Increased Multiplexing appear in this table. See the data schema section of this document for a description of the other fields.

Datafilling table TOPSDEV

Field	Subfield or refinement	Entry	Explanation and action
TPCPOSNO		0-19	This field appears when DATAPATH field DATATYPE=TMS. The range for field TPCPOSNO changes from 0-3 to 0-19 when this package is present. You can enter a maximum of 20 operator positions for a TPC that subtends a TMS. Without this package, the range is 0-3.

Datafill example for table TOPSDEV

Sample datafill for table TOPSDEV appears in the following example.

TOPS Increased Multiplexing (continued)

MAP example for table TOPSDEV

```
DEVNO                                                  DEVTYPE
_____________________________________________________________
 1      FADS E        TM8    3 18    2X72AC  BELL108
 2   TADS E  2        TM8    3 19    2X72AC  BELL108
 6   FMCRT  TMS MP  ASCII   27 15
```

Datafilling table MTCFAIL

Datafill for TOPS Increased Multiplexing for table MTCFAIL appears in the following table. The fields that apply to TOPS Increased Multiplexing appear in this table. See the data schema section of this document for a description of the other fields.

Datafilling table MTCFAIL

Field	Subfield or refinement	Entry	Explanation and action
ERRCODE		0 to 255	The system sends an error code in Incoming Maintenance Message from operator position. The range is 0 to 255. The operation position maintenance test process causes the errors. 0-49 are only for TOPS MP operator positions of Nortel. You cannot change these error codes.
ERRTEXT		A maximum 63-character text string	Error message the system includes in TOPS 115 MP Maintenance log output. Enter a maximum of 63 characters for the text string.

Datafill example for table MTCFAIL

Sample datafill for table MTCFAIL appears in the following example.

MAP example for table MTCFAIL

```
ERRCODE            ERRTEXT
_____________________________________________________________
52                 AUDIT_CARD_NOT_RESPONDING
145                SELF_TEST_DIAGNOSTICS_FAILED
```

Datafilling table MTCTEST

Datafill for TOPS Increased Multiplexing for table MTCTEST appears in this table. The fields that apply to TOPS Increased Multiplexing appear in this

TOPS Increased Multiplexing (end)

table. See the data schema section of this document for a description of the other fields.

Datafilling table MTCTEST

Field	Subfield or refinement	Entry	Explanation and action
ERRCODE		0 to 511	Error code that the system includes in the Incoming Maintenance Message from operator position. The range is 0-511. The operator position maintenance test process causes the errors. Error codes 101, 201-306, and 401-411 are only for TOPS MP operator positions of Nortel. You cannot change these error codes.
ERRTEXT		A maximum 63-character text string	Error message the system includes in AUDT 131 MP Diagnostic log output. You can enter a maximum of 63 characters for the text string.

Datafill example for table MTCTEST

Sample datafill for table MTCTEST appears in the following example.

MAP example for table MTCTEST

```
ERRCODE          ERRTEXT
_____________________________________________________
101              SOFTWARE_ERROR_WITH_TPC
228              CC_DATA_WAS_LOST_DURING_TEST
411              ERROR_IN_KEYBOARD_TEST
```

Tools for verifying translations

The TOPS Increased Multiplexing feature does not use tools for verifying translations.

SERVORD

The TOPS Increased Multiplexing feature does not use SERVORD.

TOPS Inward Validation

Ordering codes

Functional group ordering code: OSB00101

Functionality ordering code: Not applicable

Release applicability

BCS09 and up

TOPS Inward Validation was introduced in BCS09.

Prerequisites

To operate, TOPS Inward Validation requires the following:

- Functionality BAS Generic, BAS00003
- Table TOPSFTR paramter TOPS_ON_OFF_SWITCH = Y

Description

This functionality is provided by the following features:

Feature number	Feature name
BR0360	Inward Validation

This functionality allows TOPS operators to use either or both of two methods in validating credit card numbers: the present internal check digit method and the external data base method introduced by AT&T.

The internal check digit approach may be retained for some numbers (e.g. Canadian and Carribean), where the letters VFY are displayed beside other numbers. Otherwise, if the check digit method is not used, the VFY display does not appear.

The external data base validation is initiated by the operator entering a credit card, establishing a connection to the data base, and then keying KP SPL and START (with no digits) to outpulse the special number. This outpulses the credit card number over an existing connection provided the called trunk is on-hook. The operator then receives a spoken report on the validity of the number and proceedes accordingly. However, if this option is not provided, the operator entered sequence will cause the special number to be erased.

TOPS Inward Validation (continued)

Operation

Two new tables, NPACHECK and RAOCHECK, are optionally provided to identify the type of credit card check. The table used depends on the credit card number format. If the tables are provided, then the internal check is used for all cards containing an RAO or NPA entered in the table. And, VFY is displayed for all numbers not found in the table. If the tables are not provided, VFY is never displayed, and the internal check is never performed.

Existing table CHKDIGIT is made optional and is only provided if NPACHECK and RAOCHECK are provided.

Translations table flow

The TOPS Inward Validation translation table flow is not applicable.

Limitations and restrictions

TOPS Inward Validation has no limitations or restrictions.

Interactions

TOPS Inward Validation has no functionality interactions.

Activation/deactivation by the end user

TOPS Inward Validation requires no activation or deactivation by the end user.

Billing

TOPS Inward Validation does not affect billing.

Station Message Detail Recording

TOPS Inward Validation does not affect Station Message Detail Recording.

Datafilling office parameters

TOPS Inward Validation does not affect office parameters.

TOPS Inward Validation (continued)

Datafill sequence

The following table lists the tables that require datafill to implement TOPS Inward Validation. The tables are listed in the order in which they are to be datafilled.

Datafill tables required for TOPS Inward Validation

Table	Purpose of table
CHKDIGIT	Domestic Credit Card Check Digit performs special digit checks on credit cards.
NPACHECK	NPA Check performs special digit checks on credit cards.
RAOCHECK	RAO Check performs special digit checks on credit cards.

Datafilling table CHKDIGIT

The following table shows the datafill specific to TOPS Inward Validation for table CHKDIGIT. Only those fields that apply directly to TOPS Inward Validation are shown. For a description of the other fields, refer to the data schema section of this document.

Datafilling table CHKDIGIT

Field	Subfield or refinement	Entry	Explanation and action
			This is an existing table that is not changed. Tables RAOCHECK and NPACHECK are used to define RAOs and numbering plan areas (NPA) to be checked using table CHKDIGIT.

Datafill example for table CHKDIGIT

The following example shows sample datafill for table CHKDIGIT.

MAP display example for table CHKDIGIT

```
PERIOD VERDGPOS CHKDGPOS VAL0 VAL1 VAL2 VAL3 VAL4 VAL5 VAL6 VAL7 VAL8
VAL9
_____________________________________________________________________

PRESENT        7       14    2    1    5    6    0    9    7    4    3
8
PREVIOUS       9       11    5    9    2    7    1    4    0    6    8
3
```

TOPS Inward Validation (continued)

Datafilling table NPACHECK

Table NPACHECK is used in conjunction with tables RAOCHECK and CHKDIGIT to perform special digit checks on credit cards. All credit card numbers beginning with a three-digit numbering plan area (NPA) code found in table NPACHECK are checked by table CHKDIGIT.

Note: It is recommended that table NPACHECK be empty if database validation is performed, for example, when using external calling card checks.

For related information, refer to table HOTLIST.

The following table shows the datafill specific to TOPS Inward Validation for table NPACHECK. Only those fields that apply directly to TOPS Inward Validation are shown. For a description of the other fields, refer to the data schema section of this document.

Datafilling table NPACHECK

Field	Subfield or refinement	Entry	Explanation and action
NPACODE		200 to 999 (3 digits)	Numbering plan area code. Enter the numbering plan area (NPA) code. All 14-digit credit card numbers beginning with a 3-digit NPA found in table NPACHECK have their last 4 digits checked using table CHKDIGIT. Other credit cards, beginning with an NPA, are not checked and are displayed and followed by VFY for verify.

Datafill example for table NPACHECK

The following example shows sample datafill for table NPACHECK.

MAP display example for table NPACHECK

```
RAOCODE
_____________________________________________________

    727
```

Datafilling table RAOCHECK

Table RAOCHECK is used with table NPACHECK to perform special digit checks on credit card numbers.

Table RAO is used to check the validity of 10-digit “special" numbers. Table RAO cannot be used to check the validity of revenue accounting office (RAO) codes for 14-digit calling cards. RAO codes for 14-digit calling cards must be datafilled in table RAOCHECK. The same RAO code is valid for one type of number but not the other (that is, the 14-digit number but not the 10-digit number, or vice-versa). If the RAO code is valid for both types, it must be datafilled in both table RAO and table RAOCHECK.

See table HOTLIST for related information.

The following table shows the datafill specific to TOPS Inward Validation for table RAOCHECK. Only those fields that apply directly to TOPS Inward Validation are shown. For a description of the other fields, refer to the data schema section of this document.

Table CHKDIGIT must be datafilled before table RAOCHECK.

Datafilling table RAOCHECK

Field	Subfield or refinement	Entry		Explanation and action
RAOCODE		0 to 9 digits)	(3	Revenue accounting office code . Enter the revenue accounting office (RAO) code for the credit card number.

Datafill example for table RAOCHECK

The following example shows sample datafill for table RAOCHECK.

MAP display example for table RAOCHECK

```
RAOCODE
_____________________________________________________

    727
```

Translation verification tools

TOPS Inward Validation does not use translation verification tools.

SERVORD

TOPS Inward Validation does not use SERVORD.

TOPS MP Interface

Ordering codes

Functional group ordering code: OSB00101

Functionality ordering code: does not apply

Release applicability

TOPS15 and later versions

Requirements

To operate, TOPS MP Interface requires the following:

- Functionality BAS Generic, BAS00003
- Table TOPSFTR paramter TOPS_ON_OFF_SWITCH = Y

Description

The following features provide this functionality:

Feature number	Feature name
BC2143	TOPS MP Operator Interface
BC2144	TOPS MP Operator Interface - In-Charge, Assistance, Force Management Position

This feature allows messages. These messages are between the DMS Central Control (CC) and each TOPS Position Controller (TPC) in a Position Controller Equipment (PCE) cabinet.

Operation

The TOPS MP is a call processing system that automates operator assistance functions. The TOPS MP provides the traffic operator with the resources of the toll switching system. The TOPS MP contains a PCE cabinet with a maximum of four TPCs. Each PCE cabinet provides control for a maximum of 16 TOPS MP terminals. These terminals are Operator Positions. This configuration appears in the following figure.

TOPS MP Interface (continued)

TOPS MP System Office Functional Configuration

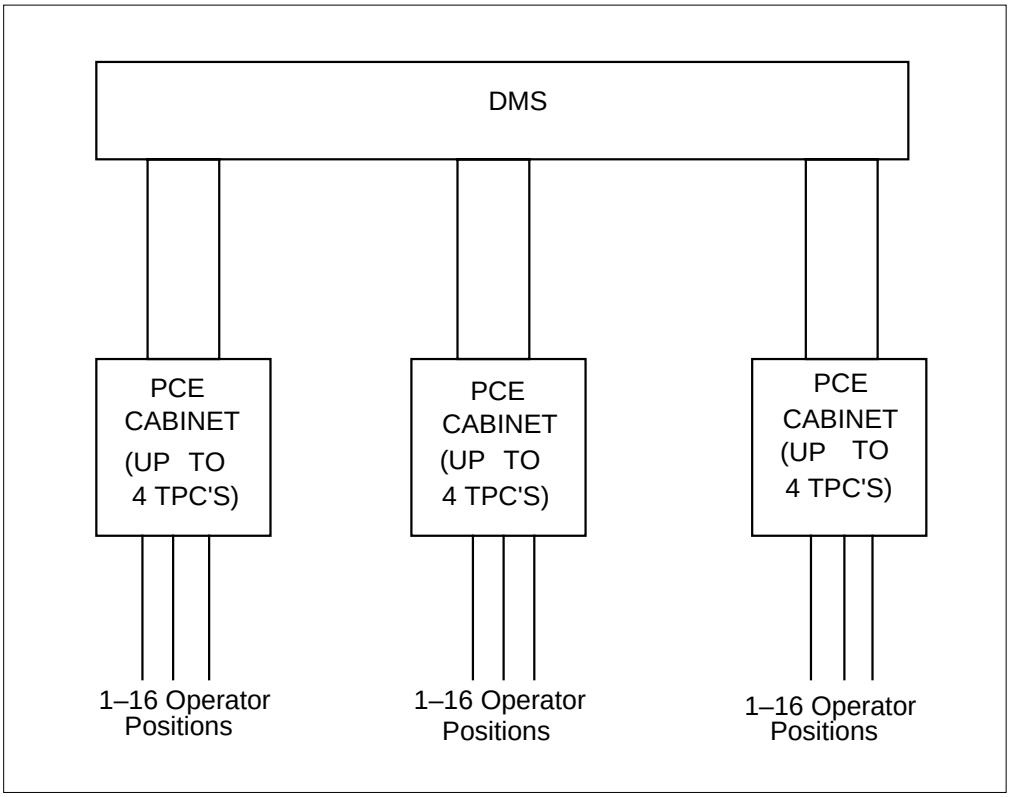

Each TPC handles the distribution of voice and data from the DMS CC and manages the screen display for each TOPS MP position.

The DMS-200s support of a mix of TPCs that use analog or digital signaling appears in the following two figures. In an analog configuration, digital messages transmit from the CC through the network to the Maintenance Trunk Module (MTM). The CC checks data table software (TOPSPOS and TOPSDEV Tables) to determine the type of controller messages transmit. The CC determines the communication protocol to use to transmit and receive data.

From the MTM, messages transmit through the network to the Trunk Module (TM) over two sets of 4-wire links. Two sets of 4-wire links must be present for each TOPS MP position. One set is for each for voice and data. The TM converts voice and data signals to analog. The TM sends these signals to the TPC.

In the TOPS MP Digital configuration, the trunk peripheral that connects to the TPC is the Digital Trunk Controller (DTC) or the Digital Carrier Module (DCM). The DTC, or DCM, connects to the TPC through a Channel Bank. The Channel Bank converts voice and data signals to digital format. The

TOPS MP Interface (continued)

Channel Bank sends these signals over DS-1 links. The DS-1 link supports 24 channels. One Channel Bank supports a maximum of 12 TOPS MP Operator Positions. One channel Bank supports two channels for each MP position.

The TPC communicates with the TOPS MP positions over a High Speed Line Interface (HSLI). This interface supports the transmission of voice and data over two standard twisted-pair telephone lines.

The TPC interfaces to the TM or DTC (DCM) and MP positions. The TPC also interfaces to a training subsystem and a TOPS Administration and Maintenance Interface (TAMI) terminal.

TOPS MP Interface (continued)

The TOPS MP System - Analog Facilities

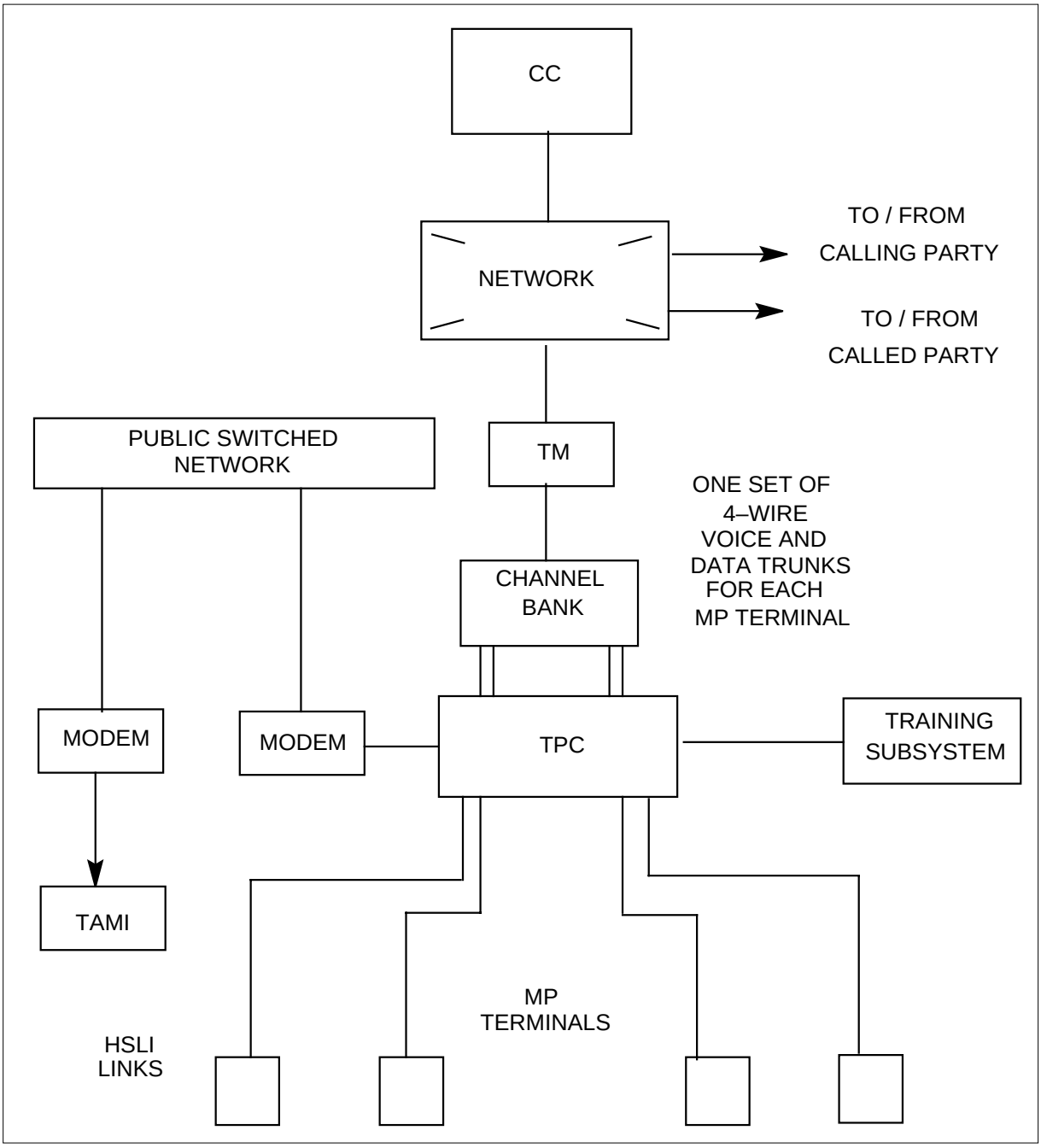

TOPS MP Interface (continued)

The TOPS MP System - Digital Facilities

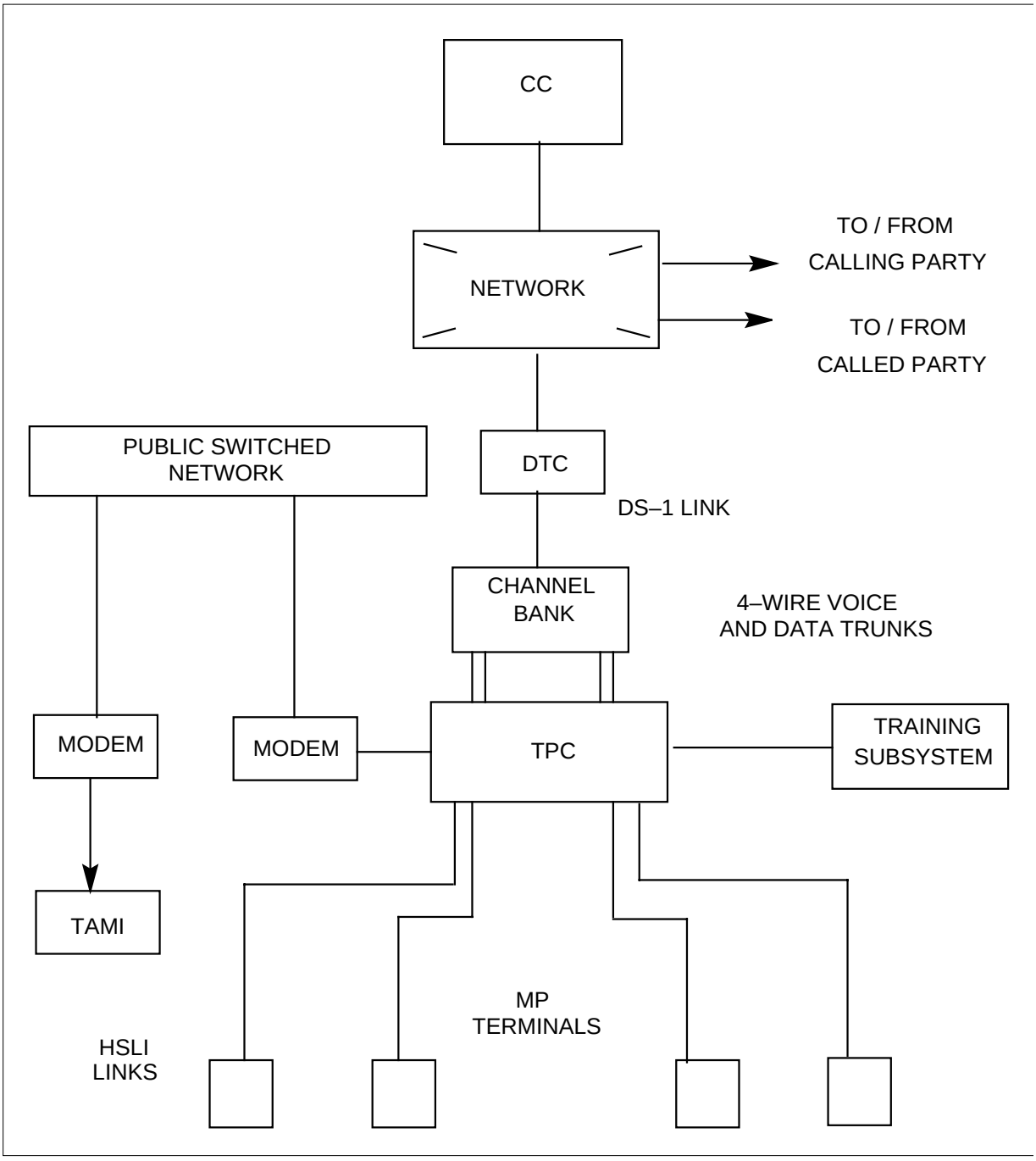

Operation

BC2143 - TOPS MP Operator Interface

The BC2143 and BC2144 provide control over the TOPS MP In-charge, Assistance, Force Management and Operator positions. These positions use the same method. The BC2143 occurs with BC2144.

BC2144 - TOPS MP Operator Interface - In-Charge, Assistance, Force Management Position

The BC2143 and BC2144 provide the message interface between the CC and the TOPS MP Assistance, In-Charge, Force Management and Operator Positions. The TOPS MP Assistance Position monitors the operators and handles assistance requests. The TOPS MP In-Charge Position performs the functions of a TOPS MP Assistance Position and displays traffic office administrative information. The Force Management Position provides administrative information in a multitraffic office layout. The TOPS MP Operator Positions handle calls that require operator assistance.

The CC software that sends messages to the position controllers chooses to send TOPS-04 messages or TOPS MP messages. Datafill in the TOPSPOS and TOPSDEV Tables determines this decision. The TOPS MP Force Management Positions use the datafill in the TOPSDEV Table. The TOPS MP Operator, Assistance and In-Charge Positions use the datafill in the TOPSPOS Table. In a TOPS MP System configuration, the CC transmits data to the TPC at 1200 baud. The CC receives data from the TPC at 300 baud. In a TOPS-04 configuration, the CC transmits data to the TOPS-04 positions at 300 baud.

When the CC software looks at tables TOPSPOS or TOPSDEV, datafill in the CNTRLR field determines the type of message. The datafill determines if the messages are TOPS-04 (NT4X71) or TOPS MP (TPC). The PROTOCOL field defines the communication protocol to use to transmit and receive data to and from a TOPS device or position. Two types of protocols are present. Bell 108 protocol is for the TOPS-04 system with the NT4X71 controller transmits and receives data at 300 Baud. Bell 202 protocol is for the TOPS MP System with the TPC controller to transmit data at 1200 Baud and receive data at 300 Baud.

Datafill

Changes to datafill at the MAP require equal changes at the TPC. Refer to section TOPS Position Controller - version I, under functionality TOPS MP Terminal Support, for additional instructions on TPC datafill.

Translations table flow

The TOPS MP Interface translation process does not affect table flow.

TOPS MP Interface (continued)

Limits

The TOPS MP Interface, OSB00101, does not have limits.

Interactions

The actions between TOPS MP Interface and other functionalities appear in the following paragraphs.

- Hosts and remotes with different versions of TOPS software are not always compatible. The procedure to update Operator Centralization (OC) software is to update the host software before the remote. This procedure applies to TOPS MP . The host cannot have in-service TOPS MP positions until the upgrade of the remote to include TOPS MP software.
- The TOPS CC software changes require parallel changes in the TPC software. These changes add or change fields on a TOPS MP Operator or Administrative Position CRT.
- The TOPS MP Assistance Positions monitor operator calls handled at TOPS MP positions.

Activation/deactivation by the end user

The TOPS MP Interface does not require activation or deactivation by the end user.

Billing

The TOPS MP Interface does not affect billing.

Station Message Detail Recording

The TOPS MP Interface does not affect Station Message Detail Recording.

Datafilling office parameters

The TOPS MP Interface does not affect office parameters.

TOPS MP Interface (continued)

Datafill sequence

The tables that require datafill to implement TOPS MP Interface appear in the following table. The tables appear in the correct entry order.

Datafill requirements for TOPS MP Interface

Table	Purpose of table
TOPSPOS	TOPS Position. Used to capture information on TOPS positions that require two trunk circuits for each position.
TOPSDEV	TOPS Device. Used to capture information on TOPS devices that require one trunk circuit.

Datafilling table TOPSPOS

The datafill for TOPS MP Interface for table TOPSPOS appears in the following table. The fields that apply to TOPS MP Interface appear in this table. Refer to the data schema section of this document for a description of the other fields.

Datafilling table TOPSPOS

Field	Subfield or refinement	Entry	Explanation and action
PROTOCOL		BELL108 or BELL202	Enter BELL108 for a TOPS MP position. Access to this table occurs for TOPS MP operator, assistance and In-Charge positions.

Datafilling table TOPSDEV

Datafill for TOPS MP Interface for table TOPSDEV appears in the following table. The fields that apply to TOPS MP Interface appear in this table. See the data schema section of this document for a description of the other fields.

Datafilling table TOPSDEV

Field	Subfield or refinement	Entry	Explanation and action
PROTOCOL		BELL108 or BELL202	Enter BELL108 for a TOPS 04 position or BELL202 for a TOPS MP position. Access to this table occurs for TOPS MP FM positions.

Tools for verifying translations

The TOPS MP Interface does not use tools for verifying translations.

TOPS MP Interface (end)

SERVORD

The TOPS MP Interface does not use SERVORD.

TOPS Multi-NPA Support

Ordering codes

Funcional group ordering code: OSB00101

Funcionality ordering code: not applicable

Release applicability

TOPS07 and up.

Prerequisites

To operate, TOPS Multi-NPA Support has the following prerequisites:

- BAS Generic, BAS00003
- Table TOPSFTR paramter TOPS_ON_OFF_SWITCH = Y

Description

This functionality is provided by the following features:

Feature number	Feature name
AN0259	TOPS Interchangeable NPA

As part of the interchangeable numbering plan area (ICNPA) expansion development, this feature incorporates the expanded NPA into the TOPS software environment. This feature applies to the North American environment and does not apply to the open numbering environment. This feature addresses structure changes to all TOPS tables affected by an ICNPA to utilize an NPA in the range 200-999.

Operation

Background

The numbering plan used in North America consists of a 10-digit number that uniquely identifies a subscriber's telephone. A 10-digit number consists of a 3-digit NPA code followed by a 7-digit directory number. The 7-digit directory number is further divided into a 3-digit central office (CO) code followed by a 4-digit station number. The format of this 10-digit number follows:

TOPS Multi-NPA Support (continued)

Previous 10-digit format

```
      3-digit NPA          7-digit Directory Number
      -----------          ------------------------
        N 0/1 X                    NXX–XXXX

Where:  X = range 0–9
        N = range 2–9
      0/1 = 0 or 1
```

With the above NPA format (N 0/1 X) a total of 160 NPA codes are available.

Numbering capacity

Due to the need for additional numbering capacity in certain areas an expanded NPA range is required to forestall NPA exhaustion. This is being accomplished by conversion to an NPA code using an NXX format. This NPA format is also called an ICNPA since those codes are traditionally used as CO codes (NXX format codes), in addition to the traditional NPA codes of the format (N 0/1 X). The 10-digit format utilizing this expanded NPA follows:

TOPS Multi-NPA Support (continued)

New 10-digit format

```
3-digit interchangeable NPA     7-digit Directory Number
---------------------------     ------------------------
          NXX                         NXX–XXXX

   Where:  X = range 0–9
           N = range 2–9
```

The number of codes available utilizing the NXX format is now 800 (200-999), providing a greater than four-fold increase in the number of NPAs.

ICNPA impacts

The change from NPA codes in the (N 0/1 X) range to the ICNPA code (NXX) range represents a considerable impact to the TOPS environment. The most apparent change is to table control software where the NPA is used as a key or field within a TOPS table. The sizing of these tables is impacted due to the increased range when the NPA is part of a table's key.

The tables listed below are impacted by the ICNPA range with respect to range checks and range expansion:

- CARRTRF
- CITYMAP
- CLDNPA/CLDNPAI
- CLDNPAEX/CLDNPAEXI
- NPACHECK
- REGNUM
- SERVSCRN
- SPLDNID
- FNPA7DIG
- TERMRC/TERMRCI

- VH
- ZENITH

Table sizing

Where necessary, table control is converted to dynamic store allocation. With dynamic store allocation, data store is allocated as needed, as tuples are added, instead of using the maximum table size. Similarly, store is deallocated as tuples are deleted and the store is no longer required.

Hotel billing information center

The hotel billing information center (HOBIC) must be able to handle the expanded ICNPA range. The DMS switch supports an ASCII interface to TTY devices utilized to record the billing information such as voice quote, dial-up auto quote, and auto quote. Directory numbers with the ICNPA range are sent over this ASCII interface. Any automated device utilizing these interfaces must handle the expanded ICNPA range.

Translations table flow

Translations table flow is not applicable for TOPS Multi-NPA Support.

Limitations and restrictions

The ranges of the applicable keys and fields of the affected tables are increased to encompass the ICNPA range. When this feature is present, the ICNPA range (NXX) is allowed to be datafilled in the affected tables. However, if this feature is not present, then only NPA codes in the (N 0/1 X) range can be datafilled in the affected tables.

Interactions

-NPA Support has no functionality interactions.

Activation/deactivation by the end user

-NPA Support requires no activation or deactivation by the end user.

Billing

-NPA Support does not affect billing.

Station Message Detail Recording

-NPA Support does not affect Station Message Detail Recording.

Datafilling office parameters

TOPS Interchangeable NPA does not affect office parameters.

TOPS Multi-NPA Support (continued)

Datafill sequence

The following table lists the tables that require datafill to implement TOPS Multi-NPA Support. The tables are listed in the order in which they are to be datafilled.

Datafill tables required for TOPS Multi-NPA Support

Table	Purpose of table
CARRTRF	Defines carrier rating tariffs
CITYMAP	Defines city to apply zone rate
CLDNPA	Determines rate schedules and steps
CLDNPAI	Determines rate schedules and steps
CLDNPAEX	Determines automatic rate method
CLDNPAEXI	Determines automatic rate method
NPACHECK	Used to check credit cards
REGNUM	Associates region names to third party and credit card numbers.
SERVSCRN	Associates DN to a service
SPLDNID	Associates DN to a device or restriction
FNPA7DIG	Used to check calling cards
TERMRC	Specifies terminating rate center
TERMRCI	Specifies terminating rate center
VH	Provides V and H for NPA and NXX.
ZENITH	Defines zenith numbers

Datafilling table CARRTRF

The following table shows the datafill specific to TOPS Multi-NPA Support for table CARRTRF. Only those fields that apply directly to TOPS Multi-NPA

Support are shown. For a description of the other fields, refer to the data schema section of this document.

Datafilling table CARRTRF

Field	Subfield or refinement	Entry	Explanation and action
CLGNPA		200-999	

Datafill example for table CARRTRF

The following example shows sample datafill for table CARRTRF.

MAP display example for table CARRTRF

```
CARNAME   CLDNPA   CLGNXX    TARIFF
_____________________________________________
CARR1     212      809     CARR1TRF1
```

Error messages for table CARRTRF

If this package is not present and a CLGNPA is entered that is not in the (N 0/1 X) format, error message INVALID NPA is output.

Datafilling table CITYMAP

The following table shows the datafill specific to TOPS Multi-NPA Support for table CITYMAP. Only those fields that apply directly to TOPS Multi-NPA Support are shown. For a description of the other fields, refer to the data schema section of this document.

Datafilling table CITYMAP

Field	Subfield or refinement	Entry	Explanation and action
NPA		200-999	

Datafill example for table CITYMAP

The following example shows sample datafill for table CITYMAP.

MAP display example for table CITYMAP

```
NPA   NXX   CITY
_____________________________________________
213   221   LOSANG
```

TOPS Multi-NPA Support (continued)

Error messages for table CITYMAP

If this package is not present and an NPA is entered that is not in the (N 0/1 X) format, error message INVALID NPA is output.

Datafilling tables CLDNPA and CLDNPAI

The following tables shows the datafill specific to TOPS Multi-NPA Support for tables CLDNPA and CLDNPAI. Only those fields that apply directly to -NPA Support are shown. For a description of the other fields, refer to the data schema section of this document.

Datafilling tables CLDNPA and CLDNPAI

Field	Subfield or refinement	Entry	Explanation and action
CLDNPA		200-999	
Note: Datafill is the same for both tables.			

Datafill example for tables CLDNPA and CLDNPAI

The following example shows sample datafill for tables CLDNPA and CLDNPAI.

MAP display example for tables CLDNPA and CLDNPAI

```
CLDNPA        TARIFF        OVERLAY
_____________________________________________________
809         STKITTS1      EXT STKITTS469  250
```

Error messages for tables CLDNPA and CLDNPAI

If this package is not present and a CLDNPA is entered that is not in the (N 0/1 X) format, error message INVALID NPA is output.

Datafilling tables CLDNPAEX and CLDNPAEXI

The following tables shows the datafill specific to TOPS Multi-NPA Support for tables CLDNPAEX and CLDNPAEXI. Only those fields that apply

directly to TOPS Multi-NPA Support are shown. For a description of the other fields, refer to the data schema section of this document.

Datafilling tables CLDNPAEX and CLDNPAEXI

Field	Subfield or refinement	Entry	Explanation and action
CLDNPA		200-999	
Note: Datafill is the same for both tables.			

Datafill example for tables CLDNPAEX and CLDNPAEXI

The following example shows sample datafill for tables CLDNPAEX and CLDNPAEXI.

MAP display example for tables CLDNPAEX and CLDNPAEXI

```
CLDNPA   CLDNXX   TARIFF    OVERLAY
_____________________________________________________
212      837      BELLONT   VH   CANUSA
```

Error messages for tables CLDNPAEX and CLDNPAEXI

If this package is not present and a CLDNPA is entered that is not in the (N 0/1 X) format, error message INVALID NPA is output.

Datafilling table NPACHECK

The following table shows the datafill specific to TOPS Multi-NPA Support for table NPACHECK. Only those fields that apply directly to TOPS Multi-NPA Support are shown. For a description of the other fields, refer to the data schema section of this document.

Datafilling table NPACHECK

Field	Subfield or refinement	Entry	Explanation and action
NPACODE		200-999	

Datafill example for table NPACHECK

The following example shows sample datafill for table NPACHECK.

TOPS Multi-NPA Support (continued)

MAP display example for table NPACHECK

```
NPACODE
_____________________________________________________________
212
```

Error messages for table NPACHECK

If this package is not present and a NPACODE is entered that is not in the (N 0/1 X) format, error message INVALID NPA is output.

Datafilling table REGNUM

The following table shows the datafill specific to TOPS Multi-NPA Support for table REGNUM. Only those fields that apply directly to TOPS Multi-NPA Support are shown. For a description of the other fields, refer to the data schema section of this document.

Datafilling table REGNUM

Field	Subfield or refinement	Entry	Explanation and action
DOMNUM		NPA-NXX RAO-0/1XX	The range of the NPA portion is changed to 200-999.

Datafill example for table REGNUM

The following example shows sample datafill for table REGNUM.

MAP display example for table REGNUM

```
DOMNUM      REGION
_____________________________________________________________
809331     CARIBBEAN
```

Error messages for table REGNUM

If this package is not present and a DOMNUM NPA is entered that is not in the (N 0/1 X) format, error message INVALID NPA is output.

Datafilling table SERVSCRN

The following table shows the datafill specific to TOPS Multi-NPA Support for table SERVSCRN. Only those fields that apply directly to TOPS Multi-NPA

Support are shown. For a description of the other fields, refer to the data schema section of this document.

Datafilling table SERVSCRN

Field	Subfield or refinement	Entry	Explanation and action
CALLED NUMBER		10 digit DN where the 1st three digits are the NPA	The range of the NPA portion is changed to 200-999.

Datafill example for table SERVSCRN

The following example shows sample datafill for table SERVSCRN.

MAP display example for table SERVSCRN

```
SERVSCRN      SERVNAME
_____________________________________________________________
416555        TOLLFREE
```

Error messages for table SERVSCRN

If this package is not present and a SPLDN NPA is entered that is not in the (N 0/1 X) format, error message INVALID NPA is output.

Datafilling table SPLDNID

The following table shows the datafill specific to TOPS Multi-NPA Support for table SPLDNID. Only those fields that apply directly to TOPS Multi-NPA Support are shown. For a description of the other fields, refer to the data schema section of this document.

Datafilling table SPLDNID

Field	Subfield or refinement	Entry	Explanation and action
SPLDN		10 digit DN where 1st three digits are the NPA	The range of values for the NPA portion is changed to 200-999.

Datafill example for table SPLDNID

The following example shows sample datafill for table SPLDNID.

TOPS Multi-NPA Support (continued)

MAP display example for table SPLDNID

```
SPLDN        SPLSEL
_____________________________________________________________
4166757611   AQHTL  0013
```

Error messages for table SPLDNID

If this package is not present and a SPLDN NPA is entered that is not in the (N 0/1 X) format, error message INVALID NPA is output.

Datafilling table FNPA7DIG

The following table shows the datafill specific to TOPS Multi-NPA Support for table FNPA7DIG. Only those fields that apply directly to TOPS Multi-NPA Support are shown. For a description of the other fields, refer to the data schema section of this document.

Datafilling table FNPA7DIG

Field	Subfield or refinement	Entry	Explanation and action
ORIGSTS		200-999	
TERMNPA		200-999	

Datafill example for table FNPA7DIG

The following example shows sample datafill for table FNPA7DIG.

MAP display example for table FNPA7DIG

```
ORIGSTS    FROMNXX   TONXX     TERMNPA
_____________________________________________________________
613        737       737       919
```

Datafilling tables TERMRC and TERMRCI

The following table shows the datafill specific to TOPS Multi-NPA Support for tables TERMRC and TERMRCI. Only those fields that apply directly to -NPA

Support are shown. For a description of the other fields, refer to the data schema section of this document.

Datafilling tables TERMRC and TERMRCI

Field	Subfield or refinement	Entry	Explanation and action
NPA		200-999	
Note: Datafill is the same for both tables.			

Datafill example for tables TERMRC and TERMRCI

The following example shows sample datafill for tables TERMRC and TERMRCI.

MAP display example for tables TERMRC and TERMRCI

```
NPA    NXX     TRC
_____________________________________________________________
809    662      1
```

Error messages for tables TERMRC and TERMRCI

If this package is not present and an NPA is entered that is not in the (N 0/1 X) format, error message INVALID NPA is output.

Datafilling table VH

The following table shows the datafill specific to TOPS Multi-NPA Support for table VH. Only those fields that apply directly to TOPS Multi-NPA Support are shown. For a description of the other fields, refer to the data schema section of this document.

Datafilling table VH

Field	Subfield or refinement	Entry	Explanation and action
NPA		200-999	

Datafill example for table VH

The following example shows sample datafill for table VH.

TOPS Multi-NPA Support (end)

MAP display example for table VH

```
NPA    NXX       V         H
_____________________________________________________________
809    662     4338      2241
```

Error messages for table VH

If this package is not present and an NPA is entered that is not in the (N 0/1 X) format, error message INVALID NPA is output.

Datafilling table ZENITH

The following table shows the datafill specific to TOPS Multi-NPA Support for table ZENITH. Only those fields that apply directly to TOPS Multi-NPA Support are shown. For a description of the other fields, refer to the data schema section of this document.

Datafilling table ZENITH

Field	Subfield or refinement	Entry	Explanation and action
FWDDN		200-999 for NPA portion	The range of values for the NPA portion is changed to 200-999.

Datafill example for table ZENITH

The following example shows sample datafill for table ZENITH.

MAP display example for table ZENITH

```
NPA    NXX       V         H
_____________________________________________________________
809    662     4338      2241
```

Error messages for table ZENITH

If this package is not present and a FWDDN NPA is entered that is not in the (N 0/1 X) format, error message INVALID NPA is output.

Translation verification tools

-NPA Support does not support TRAVER.

SERVORD

-NPA Support does not use SERVORD.

TOPS NOTIS Format

Ordering codes

Functional group ordering code: OSB00101

Functionality ordering code: not applicable

Release applicability

TOPS15 and up

TOPS NOTIS Format was introduced in BCS10.

Prerequisites

To operate, TOPS NOTIS Format requires the following:

- Functionality BAS Generic, BAS00003
- Table TOPSFTR paramter TOPS_ON_OFF_SWITCH = Y

Description

This functionality is provided by the following features:

Feature number	Feature name
BR0374	NOTIS Format for Trouble Report

This functionality provides a new recording device, Network operator Trouble Information System (NOTIS), for trouble reports.

Operation

The NOTIS device is used to output trouble reports. When the operator keys KP TRBL + (trouble code), the information can be saved in a log or a trouble report appearing on a NOTIS device. The NOTIS device is input/ourput, and only one is allowed for each office.

In order to use the NOTIS device, tables TOPSDEV and TOPSTRBL must be datafilled as shown in the datafill procedure section.

Translations table flow

The TOPS NOTIS Format translations tables are described in the following list:

- Table TERMDEV defines terminal log device
- Table LOGDEV associates classes with each terminal device
- Table LOGCLASS associates a class with each report name

TOPS NOTIS Format (continued)

- Table TOPSDEV defines the NOTIS device
- Table TOPSTRBL selects the NOTIS device. Also, the report name in table LOGCLASS is associated with entry in field REPORT of table TOPSTRBL.

The TOPS NOTIS Format translation process is shown in the flowchart that follows.

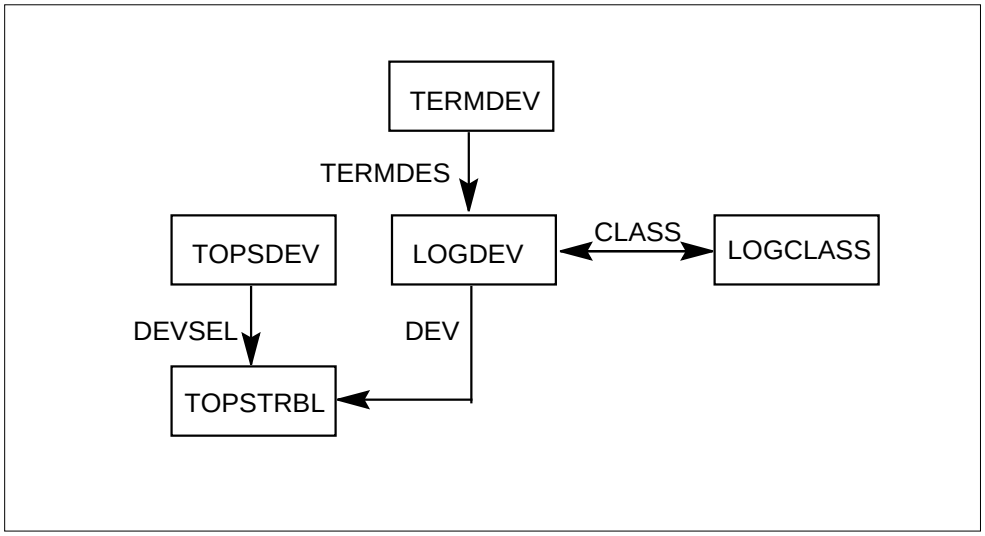

The following table lists the datafill content used in the flowchart.

Datafill example for TOPS NOTIS Format

Datafill table	Example data
TERMDEV	MAPVDU 1 20 VUC4 B1200 CL 1X67AB NONE Y NONE 13 14 $
LOGDEV.	MAPVDU NONE (0 5) STD Y N
LOGCLASS	SNAC100 0 0 N 0 N
TOPSDEV	1 NOTIS LTC 4 3 13 DS1SIG BELL108
TOPSTRBL	1 NOTIS

Limitations and restrictions

TOPS NOTIS Format has no limitations or restrictions.

Interactions

TOPS NOTIS Format has no functionality interactions.

TOPS NOTIS Format (continued)

Activation/deactivation by the end user

TOPS NOTIS Format requires no activation or deactivation by the end user.

Billing

TOPS NOTIS Format does not affect billing.

Station Message Detail Recording

TOPS NOTIS Format does not affect Station Message Detail Recording.

Datafilling office parameters

TOPS NOTIS Format does not affect office parameters.

Datafill sequence

The following table lists the tables that require datafill to implement TOPS NOTIS Format. The tables are listed in the order in which they are to be datafilled.

Datafill tables required for TOPS NOTIS Format

Table	Purpose of table
TERMDEV	Terminal Device table defines terminal devices
LOGDEV	LOG Device table associates classes with each terminal device
LOGCLASS	LOG Class table associates a class with each report name
TOPSDEV	TOPS Device table defines the NOTIS device
TOPSTRBL	TOPS Operator Reporting Trouble Disposition table selects the NOTIS device

Datafilling table TERMDEV

The following table shows the datafill specific to TOPS NOTIS Format for table TERMDEV. Only those fields that apply directly to TOPS NOTIS Format are shown. For a description of the other fields, refer to the data schema section of this document.

Datafilling table TERMDEV

Field	Subfield or refinement	Entry	Explanation and action
TERMDES		alphanumeric	Terminal device. If terminal is not already listed, add tuple for terminal to print NOTIS reports.

TOPS NOTIS Format (continued)

Datafill example for table TERMDEV

The following example shows sample datafill for table TERMDEV.

MAP display example for table TERMDEV

```
TERMDES  IOCNO  CKTNO  TERMTYPE  BAUDRT  INTYP  EQPEC
PRTY  GUAR  MODEM  COMCLASS
-------------------------------------------------------
MAPVDU    1      20     VUC4    B1200     CL   1X67AB
NONE   Y    NONE    13  14 $
```

Datafilling table LOGDEV

The following table shows the datafill specific to TOPS NOTIS Format for table LOGDEV. Only those fields that apply directly to TOPS NOTIS Format are shown. For a description of the other fields, refer to the data schema section of this document.

Datafilling table LOGDEV

Field	Subfield or refinement	Entry	Explanation and action
DEV			Device. If a terminal device was added to table TERMDEV, add a corresponding tuple to table LOGDEV.

Datafill example for table LOGDEV

The following example shows sample datafill for table LOGDEV.

MAP display example for table LOGDEV

```
DEV     ALT  CLASSES  FORMAT  PRIORITY  GUAR
-------------------------------------------------------
MAPVDU  NONE  (0  5)    STD      Y        N
```

Datafilling table LOGCLASS

The following table shows the datafill specific to TOPS NOTIS Format for table LOGCLASS. Only those fields that apply directly to TOPS NOTIS

Format are shown. For a description of the other fields, refer to the data schema section of this document.

Datafilling table LOGCLASS

Field	Subfield or refinement	Entry	Explanation and action
REPNAME			Report name. Add tuple for NOTIS reports.

Datafill example for table LOGCLASS

The following example shows sample datafill for table LOGCLASS.

MAP display example for table LOGCLASS

```
REPNAME   CLASS  THRESHLD  SUPPRESS  TUNITS  SYSLOG
-------------------------------------------------------
SNAC100     0       0         N        0        N
```

Datafilling table TOPSDEV

The following table shows the datafill specific to TOPS NOTIS Format for table TOPSDEV. Only those fields that apply directly to TOPS NOTIS Format are shown. For a description of the other fields, refer to the data schema section of this document.

Datafilling table TOPSDEV

Field	Subfield or refinement	Entry	Explanation and action
DEVTYPE	DEVSEL	NOTIS	New entry NOTIS can be entered for operator trouble reporting. Then, datafill refinement fields MEMVAR, CARDCODE, and PROTOCOL.

Datafill example for table TOPSDEV

The following example shows sample datafill for table TOPDEV.

MAP display example for table TOPSDEV

```
DEVNO                                                DEVTYPE
-------------------------------------------------------------
  1              NOTIS  LTC  4  3  13  DS1SIG  BELL108
```

TOPS NOTIS Format (end)

Datafilling table TOPSTRBL

The following table shows the datafill specific to TOPS NOTIS Format for table TOPSTRBL. Only those fields that apply directly to TOPS NOTIS Format are shown. For a description of the other fields, refer to the data schema section of this document.

Datafilling table TOPSTRBL

Field	Subfield or refinement	Entry	Explanation and action
DISPOSN		NOTISDEV	Trouble disposition. New value NOTISDEV can be entered. Value NIL_ROUTE is changed to NIL_TRBL_ROUTE.

Datafill example for table TOPSTRBL

The following example shows sample datafill for table TOPSTRBL.

MAP display example for table TOPSTRBL

```
TRBLCODE                DISPOSN
-------------------------------------------------------
   1                    NOTIS
   2                    NIL_TRBL_ROUTE
```

Translation verification tools

TOPS NOTIS Format does not use translation verification tools.

SERVORD

TOPS NOTIS Format does not use SERVORD.

TOPS On/off Switch

Ordering codes

Functional group ordering code: OSB00101

Functionality ordering code: not applicable

Release applicability

TOPS12 and up

TOPS12 introduced TOPS On/off Switch.

Requirements

To operate, TOPS On/off Switch requires the following:

- Functionality BAS Generic, BAS00003
- Table TOPSFTR paramter TOPS_ON_OFF_SWITCH = Y

Description

For non-LET product computing module load (PCL) offices, this functionality allows Traffic Operator Position System (TOPS) call processing to be disabled with Software Optionality Control (SOC) OSB00101.

This functionality consists of the feature as follows:

Feature number	Feature name
59007019	On/Off Switch for TOPS

Operation

Non-LET PCL offices

When SOC option OSB00101 is enabled, TOPS functionality is accessible. Example non-LET PCL offices are Global and DMS-500 offices. When SOC option OSB00101 is disabled, call processing is limited as follows:

- operator positions cannot be brought into service
- calls coming in on TOPS trunks are sent to reorder treatment
- calls requiring operator assistance are sent to reorder treatment
- OSSAIN service nodes cannot be brought into service

New log TOPS609 is the only indication that an attempt was made to access TOPS call processing or to log into an operator position while SOC option

TOPS On/off Switch (end)

OSB00101 is disabled. When SOC option OSB00101 is disabled, TOPS tables can be datafilled.

The state of this new SOC is set during a One Night Procedure (ONP) from a pre-TOP12 load to a TOP12 or higher load. If any TOPS SOCs on the dump side are ON, OSB00101 on the restore side is set to ON. If all TOPS SOCs on the dump side are IDLE, OSB00101 on the restore side is set to IDLE. All SOCs on the dump side keep their state on the restore side.

LET PCL offices

SOC option OSB00101 is not optional for LET PCL loads (NA012 and up). The SOC is set to Always Provided (A/P), so it cannot be made IDLE.

Translations table flow

The TOPS On/off Switch does not have a translations table flow.

Limitations and restrictions

SOC option OSB00101 is always present in an LET load, it is not optional.

Interactions

TOPS On/off Switch does not interact with other functionalities.

Activation and deactivation by the user

TOPS On/off Switch does not require activation or deactivation by the user.

Billing

TOPS On/off Switch does not generate billing records or changes.

Station Message Detail Recording

TOPS On/off Switch does not require Station Message Detail Recording.

Office parameters used by TOPS On/off Switch

TOPS On/off Switch does not generate office parameters.

Datafill sequence

TOPS On/off Switch does not have datafill.

Translation verification tools

TOPS On/off Switch does not use translation verification tools.

SERVORD

TOPS On/off Switch does not use the Service Order System (SERVORD).

TOPS Open Position Protocol

Ordering codes

Functional group ordering code: OSB00101

Functionality ordering code: not applicable

Release applicability

TOPS12 and later versions

Requirements

The TOPS Open Position Protocol has the following requirements for operation:

- BAS Generic, BAS00003
- Table TOPSFTR parameter TOPS_ON_OFF_SWITCH = Y

Description

The following features provide this functionality:

Feature number	Feature name
AF2861	OPP Utilities (BCS35)
AF2862	TOPS OPP Action Identifier Processing (BCS35)
AF2863	TOPS OPP Data Identifier Processing (BCS35)
AF3536	TOPS OPP Operational Measurements (BCS35)
BK07365	OPP Needs Notion of QMS SA/IC (BCS35)
AF6512	OPP Interface Development (TOPS07) - changes do not occur to this functionality
59006865	EOL Notification and EOL of TOPS ACD (TOPS12)

This package allows the Traffic Operator Position System (TOPS) and non-TOPS operator positions to communicate with the digital multiplex system (DMS). Communications uses Open Position Protocol (OPP) in the TOPS environment for a DMS application. The system only supported TOPS positions before this protocol.

Operation

The OPP communicates between the DMS and an operator position. The protocol is a flexible means of transferring information. Before OPP, the

TOPS Open Position Protocol (continued)

system used a series of American Standard Code Information Interchange (ASCII) characters to carry information. The OPP contains packets of information. The OPP is a common protocol that can communicate with a vendor position.

Auditing

The OPP is backwards compatible for three batch change supplements (BCSs). The BCS of the DMS and the BCS of the position, exchange in an audit that occurs when the position returns to service (RTS). If the two BCSs differ, the higher entity must communicate at the lower BCS. This condition applies to a maximum of three earlier BCSs. The utilities in this feature support this capability. The application provides the utility of the BCS of this message. This number determines if the utility interprets or composes.

The OPP makes provisions for the auditing of each OPP position. The provisions determine the OPP version that the position uses. The version of the OPP corresponds to the BCS number of the DMS central control (CC) software load release. Each OPP position must communicate on a level if three BCSs above or below the DMS.

The auditing occurs between the OPP positions and the switch to which the OPP connects. In an operating operator centralization (OC) environment, the auditing occurs between the host switch and the OPP positions. The audit is exchanged when each position RTSs. Office parameter AUDIT_INTERVAL in Table OFCSTD defines the intervals at which the system performs the audit. The audit can check communication between the DMS and the positions when the system performs the a check at normal intervals.

The audit queries the BCS number in use by each OPP position. The DMS can locate a position with a BCS number that disagrees with the DMS BCS number by more than three. If this problem occurs, the system generates log TOPP100 and the OPP position becomes system busy (SysB). To resolve the problem, offline (OFFL) the OPP position and install the appropriate software. When the position RTSs the position responds to the audit with an acceptable value. The position remains in service (INSV).

Table TOPSPOS

When the OPP package is present, table TOPSPOS allows the entry of positions with field PROTOCOL set to OPP. A sample entry in table TOPSPOS for an OPP position appears in the following example:

TOPS Open Position Protocol (continued)

MAP example for table TOPSPOS

```
POSNO
             VCCKT VCPDGRP  CARDCODE
                                              DATAPATH
                                                  POSAREA
_____________________________________________________________

 204
      TMS   1 0 15   NPDGP    DS1SIG
                                TMS MP OPP  27 0
                                     OPR  2 QMSCAM CORE 6
```

QMS

Define OPP positions according to QMS Host/Remote Queueing, OSB00101. The OPP positions in table TOPSPOS can have a position type (POS field) of ASST or IC. This condition affects login, delay calls, SA queueing, and passwords as follows:

- Login:

  The system searches table TQOPROF instead of table OPRDAT for operator numbers used to login to OPP QMS SA/IC positions. The system uses the service profile in TQOPROF for login processing. The system rejects the login if the system does not find base services from this profile. The system checks the service list for the position from table TOPSPOS for these services. All QMS services, associate with a base service. The base services are TASERV, DASERV or INTCSERV.

  This process is like the comparison of QMS services from profiles in TQOPROF and TOPSPOS performed for general QMS operators. The system does not use any other fields in the TQOPROF tuple for login. The SELAREA field determines default QMS service for SA/IC delay calls. A description of this process appears in the next section. It is not clear if an SA/IC operator defines differently to the QMS CAM than to a general operator, or, if the SA/IC operator defines the position differently than the general QMS operator. This process does not affect table engineering associated with the QMS CAM. For example, table QAPLNDEF.

- Delay Calls:

TOPS Open Position Protocol (continued)

An OPP QMS SA/IC position can access an idle loop and start a delay call. When this action occurs, the system obtains the service for the delay call in the same method as for general QMS operators. This method is as follows:

- Obtain the call queue profile number from the SELAREA field of table TQOPROF. Use the operator number of the SA/IC as a key.
- Index table TQCQPROF with this call profile number. Obtain the delay CT4Q from field DLAYCT4Q.
- Index table TQMSFCQA with the delay CT4Q. Obtain the call queue from the CALLQ field.
- Index table TQCQINFO with the call queue. Obtain the QMS service from field QMSSERV.
- The QMSSERV field contains the QMS service assigned to the OPP QMS SA/IC delay call.
- SA Queueing

  When a general operator requests help, the system performs a check. This check makes sure that the SA/IC operator has the base service of the call of the general operator.
- Password

The system has two password parameters that control password prompting during login:

- TOPS_PASSWORD_ENABLE

  This parameter is in table OFCENG. This parameter determines if the system prompts for a login password for an operator number in use from table OPRDAT. These operator numbers are for ASCII-based (non-OPP) SA/ICs serving a QMS team.
- QMSFM_PASSWORD_ENABLE.

  This parameter is in table TQMSOPT. This parameter determines if the system prompts for a login password for an operator number in use from table TQOPROF. These operator numbers are for all QMS general operators and IWS SA/ICs serving the QMS teams.

Logs

This functionality uses the following LOGS:

- TOPP 100—The system generates this log when the OPP position is more than three BCSs from the DMS. The system generates this log when the TOPS application does not support data from the OPP position. The

system checks the three BCSs requirement during an audit. The AUDIT_INTERVAL in table OFCSTD controls the audit interval.

- TOPP 101—The system generates this log when the DMS receives a bad call ID and/or switch ID associated with a request for call details.
- OPP 100—The system generates this log to flag protocol errors.

Translations table flow

The TOPS Open Position Protocol does not affect the translations table flow.

Limits

The following limits, apply to TOPS Open Position Protocol:

- TMS

  The use of OPP requires that the TOPS Message Switch (TMS) is the interfacing DMS peripheral between the position and the switch.

- FMCRT

  The OPP does not support FMCRT functionality of TOPS. You can use the current methods to perform FMCRT functionality. For example, TOPS-MP or TOPS-IV position and the standard ASCII protocol.

You can use the Management Information System (MIS) that the QMS provides to perform this functionality. The QMS MIS provides force management data in a flexible format. The QMS MIS can generate graphical and numeric reports. Detailed information is available on how to observe operator and call queue statistics over a wide range of requirements. For example, the Average Work Time (AWT) with call type, operator, or queue granularity appears on the QMS MIS.

The QMS MIS is available with complete installation of the QMS.

- The system cannot guarantee communications between the DMS and the position when the OPP audit BCS differs by more than three. Each application treats this condition in a different way.

  The OPP position audits occur in the host switch only. This remote audit involves messaging across the OC datalinks as the AUDIT_INTERVAL expires. The remotes do not audit the positions that connect to the host.

TOPS Open Position Protocol (continued)

The system does not notice a difference greater than three between the position version and the remote version.

- You must test this feature at the same time as an OPP application. Certain identifiers or identifier values are not executable because the application dictates the limit to which the system uses the protocol.
- The use of OPP in an OC configuration requires the OPP feature in the Host and Remote offices. The OPP information in the Host/Remote messaging requires the operating company to comply with this limit.

Interactions

Descriptions of the interactions between TOPS Open Position Protocol and other functionalities appear in the following paragraphs.

This feature package interacts with all current TOPS features. This feature does not without affect any TOPS functionality. In an OC environment, the host and remote switches require this package to support OPP positions at the host.

Activation/deactivation by the end user

The TOPS Open Position Protocol does not require the end user to activate or deactivate this feature.

Billing

The TOPS Open Position Protocol does not affect billing.

Station Message Detail Recording

The TOPS Open Position Protocol does not affect Station Message Detail Recording (SMDR).

Datafilling office parameters

The TOPS Open Position Protocol does not affect office parameters.

Datafill sequence

The tables that require datafill to implement TOPS Open Position Protocol appear in the following table. The tables appear in the correct entry order.

Datafill tables for TOPS Open Position Protocol

Table	Purpose of table
TOPSPOS	Select OPP for position protocol.

Datafilling table TOPSPOS

Datafill for TOPS Open Position Protocol, for table TOPSPOS appears in the following table. The fields that apply to TOPS Open Position Protocol appear in the table. See the data schema section of this document for a description of the other fields.

Datafilling table TOPSPOS

Field	Subfield or refinement	Entry	Explanation and action
PROTOCOL		OPP	Selects Open Position Protocol.

Datafill example for table TOPSPOS

Sample datafill for table TOPSPOS appears in the following example:

MAP example for table TOPSPOS

```
POSNO
             VCCKT VCPDGRP  CARDCODE
                                          DATAPATH
                                              POSAREA
-------------------------------------------------------

 204
      TMS   1 0 15   NPDGP    DS1SIG
                                TMS MP OPP  27 0
                                     OPR  2 QMSCAM CORE 6
```

Tools for verifying translations

The TOPS Open Position Protocol does not use tools for verifying translations.

SERVORD

The TOPS Open Position Protocol does not use SERVORD.

TOPS Operator Password

Ordering codes

Functional group ordering code: OSB00101

Functionality ordering code: not applicable

Release applicability

TOPS15 and up

Prerequisites

To operate, TOPS Operator Password has the following prerequisites:

- BAS Generic, BAS00003
- Table TOPSFTR parameter TOPS_ON_OFF_SWITCH = Y

Description

This functionality is provided by the following features:

Feature number	Feature name
AG0931	

A password mechanism is provided by this feature to secure the TOPS logon procedure. This includes providing the following:

- Password enforcement when logging on to a TOPS position
- The ability for operators to alter their own passwords
- Password administrative functions such as resetting passwords and disabling logon attempts to designated operator numbers

Operation

Previous Logon Procedure

When a TOPS operator began work, the following sequence is keyed: OPR + (operator number) + START before the operator is allowed to start work at the position.

The operator number is one to four digits in length and datafilled in table OPRDAT. This is written into a call's AMA record if a call is handled by an operator.

Problem

Operators were capable of logging on to a TOPS position using any datafilled operator number as long as that number was not currently in use.

TOPS Operator Password (continued)

Since any operator could use any datafilled number, tracking operator fraud by the operator number usage is ineffective.

Solution

An operator password is to be associated with each operator number and only one operator is to know the password for a given number. In this way when an operator number appears on an AMA record in an office, there is no mistake as to the identity of the operator who handled the call.

Each Team Administrator shall have a Team PassWord. From the TADS, each team administrator can perform administrative functions on the passwords in that team only.

One Force Administrator, with a private password FPW, can administrate any password in the hierarchy from the FADS device.

Translations table flow

The TOPS Operator Password does not affect the translation table flow.

Limitations and restrictions

The following limitations and restrictions apply to TOPS Operator Password:

- TOPS-MP needs feature AF1463 to use this feature. Since this feature is available in BCS26 and AF1463 is available in BCS27, the office parameter TOPS_PASSWORD_ENABLE is not allowed to change to Y when TOPS-MP positions are datafilled in the office. If MP positions are added after the office parameter is set, the office parameter resets to N on the next restart.
- All functionality described by this feature is only available when the office parameter TOPS_PASSWORD_ENABLE is set to Y. This includes the MAPCI command, TOPS position log in method, and TOPS device commands.
- Passwords do not survive BCS insertions. All passwords return to their default values at these times so operators and administrators must re-enter their passwords.
- There may be some ambiguity as to the current function of the KP NAME key when a UCP (unoccupied call at position) or UCD (unoccupied call at position disconnected) is at a TOPS position and a logon attempt is made. In this case, KP NAME is taken as a password entry sequence if the previous keying action was KP OPR digits START. Otherwise, KP NAME applies to a call which may be at the position.
- Passwords may not be altered while a call is at a position.

TOPS Operator Password (continued)

- This feature does not affect in-charge or assistance positions. They do not make billable calls, and therefore do not log in and password security is not required.
- The password feature is made optional via an office parameter in table OFCENG - TOPS_PASSWORD_ENABLE (or OOC_PASSWORD_ENABLE for OOC) which has a value of either Y or N.

Interactions

TOPS Operator Password has no functionality interactions.

Activation/deactivation by the end user

TOPS Operator Password requires no activation or deactivation by the end user.

Billing

TOPS Operator Password does not affect billing.

Station Message Detail Recording

TOPS Operator Password does not affect Station Message Detail Recording.

Datafilling office parameters

The following table shows the office parameters used by TOPS Operator Password. For more information about office parameters, refer to *Office Parameters Reference Manual.*

Office parameters used by TOPS Operator Password

Table name	Parameter name	Explanation and action
OFCENG	TOPS_PASSWORD_ENABLE	This parameter enables this feature for non-OOC (Overseas Operating Center).
OFCENG	OOC_PASSWORD_ENABLE	This parameter enables this feature for an Overseas Operating Center.

Datafill sequence

There are no tables to datafill for this package.

Translation verification tools

TOPS Operator Password does not use translation verification tools.

TOPS Operator Password (end)

SERVORD

TOPS Operator Password does not use SERVORD.

TOPS Remote CAMA

Ordering codes

Functional group ordering code: OSB00101

Functionality ordering code: not applicable

Release applicability

BCS21 and up

Prerequisites

To operate, TOPS Remote CAMA has the following prerequisites:

- BAS Generic, BAS00003
- Table TOPSFTR parameter TOPS_ON_OFF_SWITCH = Y

Description

This functionality is provided by the following features:

Feature number	Feature name
BR0172	RONI/CKO Function
BR0498	RONI Supervisory Signal Change
BR0602	Remote ONI Via OC

This functionality provides Remote Operator Number Identification (RONI) for a DMS-200 or DMS-100/200 office equipped with Operator Centralization (OC).

BR0172 - RONI/CKO Function

TOPS operators or CAMA board operators are required to collect the calling customer's telephone number for Operator Number Identification (ONI) calls and calls where the Automatic Number Identification (ANI) equipment has failed. Numbers are included on the initial Automatic Message Accounting (AMA) tape entry. With this feature, TOPS positions in a remote toll office may be used to collect the numbers for offices that do not have TOPS positions or CAMA board operators of their own. This arrangement is known as TOPS Remote Operator Number Identification (RONI).

BR0498 - RONI Supervisory Signal Change

This feature provides capability for the ONI function for the Direct Distance Dialing (DDD) traffic that originates from and is billed at other toll switching systems.

BR0602 - Remote ONI Via OC

Remote Operator Number Identification (RONI) is provided to an office equipped with Remote OC Datalink, OSB00101 and the Host OC Datalink, OSB00101.

Operation

This section describes the operation of TOPS Remote CAMA.

BR0172 - RONI/CKO Function

In a TOPS RONI arrangement, a call requiring a CAMA operator (ONI or ANI Fail) at a toll office is routed to a distant TOPS complex, where a TOPS operator collects the calling number and releases the call. The number is outpulsed back to the toll office for validity checks. If the number is not validated, the call is returned to a distant TOPS operator as a RONI recall. A subsequent attempt to collect the correct number is made. The RONI recall does not leave the position until the operator collects the correct calling number or terminates the call. Once the correct number is collected, control passes back to the toll office.

The toll office and the TOPS office communicate using on/off hook supervision signals on two trunks: a data trunk and a voice trunk. Information about the call type (ONI or ANI Fail) is transmitted as 480-Hz tone bursts over the voice link. The collected digits are outpulsed to the toll office over the data trunk.

System operation

The originating toll office sends a rapid series of 480-Hz tones to the TOPS toll office to indicate the ANI status. A single tone means that the call is an ANI Fail. Two-tone bursts indicate that the call is ONI. These tones are sampled by a tone detector with firmware modified to detect 480-Hz (NT5X29AB circuit pack).

The tone burst durations are expected to fall within the following limits:

- ONI. The first tone should not be less than 50 milliseconds (ms) or greater than 175 ms. The silent period should not be less than 50 ms or greater than 175 ms. The second tone should not be less than 60 ms or greater than 240 ms.
- ANI Fail. This tone should not be less than 420 ms or greater than 1270 ms.

With the RONI/CKO Function feature, CAMA calls are routed to a distant TOPS toll switch where they appear at TOPS positions as Remote CAMA (RCAMA) calls. If the call origination header is flashing, the call is an ANI

TOPS Remote CAMA (continued)

Fail and the operator asks the calling customer for his telephone number. If the header is not flashing, the call type is ONI and the customer must volunteer his number. In either case, the operator enters the calling number in the system and the call leaves the operator position immediately. The number is then outpulsed to the originating toll office for verification checks.

If less than 50 ms of tone are detected, the call is treated as an ONI. If no tone is detected, the call is treated as an ANI Fail, and a message is logged.

If the number does not pass these checks, the call is returned to an operator. The call origination header is identical to the original call arrival header. However, the calling number flashes to indicate that it failed verification by the originating office. The flash is a signal to the operator to try challenging the customer for his number and reentering it into the system.

The call remains at the operator position while the number is outpulsed on subsequent attempts. During outpulsing, the new calling number is displayed until the originating office indicates another failure (the calling number flashes again) or a success (the call leaves the position automatically). Once the correct number is collected, the call progresses normally at the orignating office.

Hardware

A new tone detector (NT5X29AB) is required which is capable of detecting a high tone of 480-Hz with variable cadence. Automatic Voice Network (AUTOVON) uses high quality trunks and different grades of priority pre-emption. The Autovon tone detector is enhanced to recognize 480-Hz tones. Either analog trunks or Digital Carrier Modules (DCM) may be used.

A new trunk circuit pack, called RONI, is required and is mounted in a trunk module (TM). It contains the equivalent of two trunks (or two channels), one for voice and one for keying. The voice circuit provides a talking path for the TOPS operator and the necessary signaling and supervision states to handle ONI and ANI Fail. The key circuit provides an interface for sending multifrequency (MF) key pulsing to the remote toll office.

BR0498 - RONI Supervisory Signal Change

The RONI call is presented to the operator as ONI or ANI Fail, depending on the CAMA toll office zip tones. If these tones are not received or are unable to reconstruct, then the call is ANI Fail.

The system distributes RONI calls to any TOPS operator, except when restrictions or preferences are in force.

System operation

With the RONI Supervisory Signal Change Feature, an audible signal and indicator informs the operator that only the ONI function is required. The system provides a double beep tone when a TOPS position is attached, as a signal to the customer to provide the operator with the calling number.

When the operator collects the 7-digit calling number, and keys it into the system, the call is released from the TOPS position immediately. The operator handles the call in exactly the same manner, whether the call is originated locally or from a remote toll office. From the operator viewpoint, the call appears as a simple CAMA call.

Validity checking, switching, and CAMA billing occur in the originating toll office, not in the TOPS office. Only operator identification action is performed at the TOPS office.

If the CAMA toll office sends “reset" (good digits), the RONI circuit becomes idle. If the toll office sends “reorder" (bad digits), the call is presented to an operator as a RCAMA recall and the calling digits appear flashing as a signal to the operator to challenge the customer for his number.

Once the new number has been entered, the old digits disappear from the calling number field. The call remains at the position until the toll office responds to outpulsing. If the number fails verification again, the calling number field on the TOPS screen is updated with new flashing digits and the operator may try again. The call remains at the position until:

- The correct digits are entered and the toll office sends “reset."
- The toll office gives up and sends “reset."
- The operator cancels the call and releases it from the TOPS position.

BR0602 - Remote ONI Via OC

RONI circuits are used by a distant toll office to collect digits for CAMA calls when the toll office does not have TOPS positions of its own. The call is routed to a remote TOPS office over the RONI circuit, then to a host TOPS office over voice and data links. A TOPS operator types in the digits and they are outpulsed back to the distant toll office.

The RONI circuit consists of the following trunk types:

- Voice trunks
- Data trunks

TOPS Remote CAMA (continued)

The two trunks must be treated as a single entity. Operations performed on one trunk affect the other. The trunk member data for the voice and data circuits must be kept in sync at all times.

System operation

RONI is a feature available to a Toll office for handling ONI and ANI Fail calls in place of CAMA boards. RONI circuits can be used by this office to access TOPS operators who are actually located in another office.

The call connects over the RONI circuits to a TOPS remote office, then over voice and data links to a TOPS host office to an operator who keys in the calling number required by the CAMA office for completion of the call. RONI circuits consist of two parallel trunks that are treated as a single entity. The voice trunk first receives the call and defines zip tones from the CAMA office and then provides a “talking path" between the operator and the customer. The data trunk or “keypulse path" is for data communication such as carrying the MF calling number signals to the CAMA office as keyed in by the operator.

The call progression is from end office to the CAMA office to the OC remote office, using the TOPS operators in the host office. Refer to the following figure for the TOPS OC RONI call progression. From the operator viewpoint, there is no difference on RONI call arrival or the way the call should be handled as defined by the original RONI feature.

TOPS OC RONI Call Progression

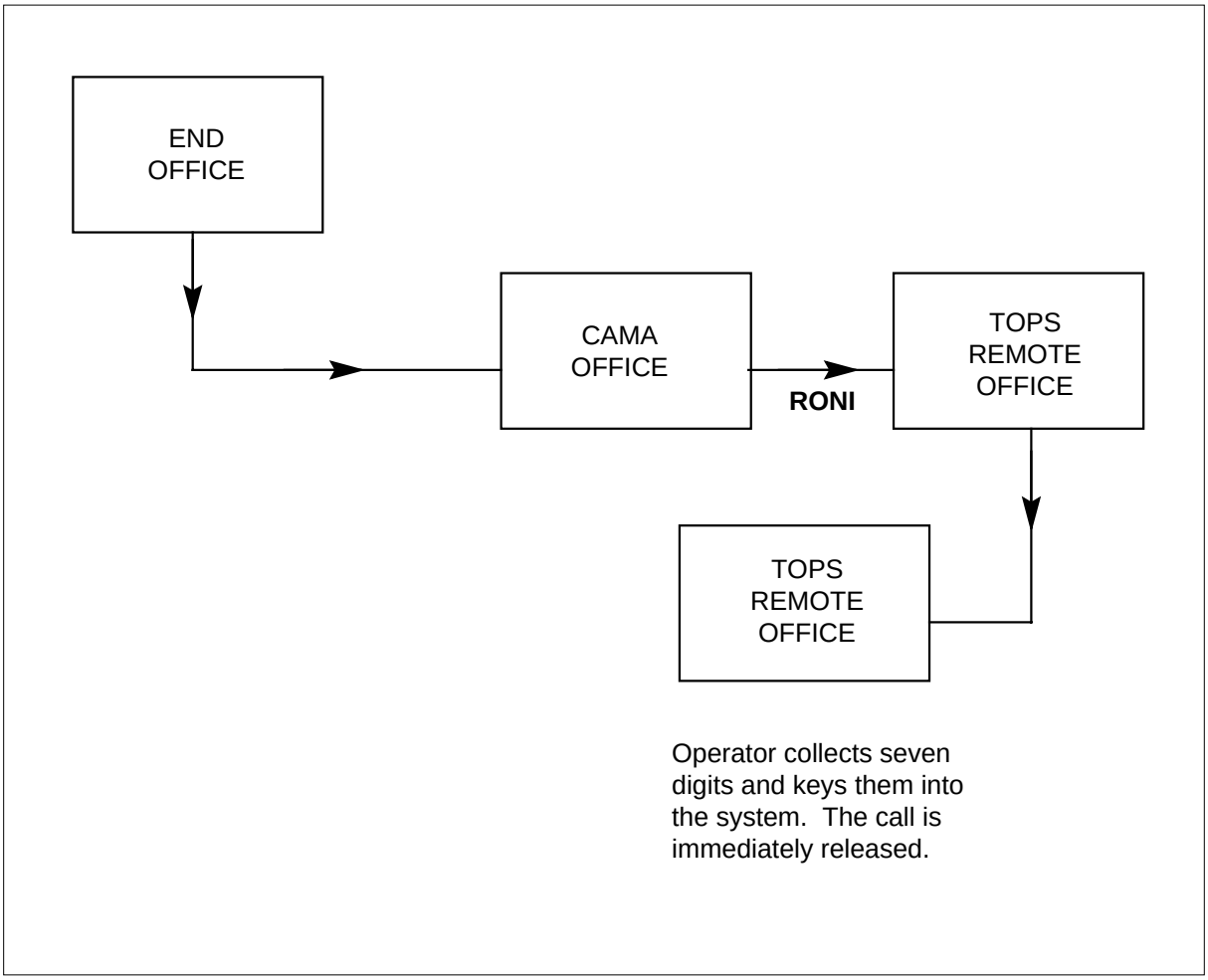

Engineering

The originating toll office and the TOPS toll office communicate over a RONI circuit. This circuit consists of two trunks:

- Voice Trunk
- Data Trunk

The voice trunk provides the talking path between the customer and the distant TOPS operator. The calling number is outpulsed from the TOPS toll office to the originating toll office over the data trunks.

Information about the state of the call is exchanged between the offices as on-hook supervision of both trunks (each state may be viewed as a 2-bit binary number).

TOPS Remote CAMA (continued)

Trunks that employ loop signaling may not be used with TOPS RONI. Only E & M-type trunks are allowed. Either analog or digital trunks may be used, although both trunks in a RONI circuit must be of the same type.

Tone detector (NT5X29AB) collects the 480-Hz tone bursts from the CAMA office. This circuit is switched through the network when required and provisioned as a service circuit.

Verification

To verify that TOPS Remote CAMA has been activated and is operating as intended, conduct the following test call.

At the MAP:

1 Verify the PROTOCOL data field in table trunk group for RONI trunks.

2 Use the CI range command on table TRKGRP and verify that the new field PROTOCOL contains two elements:

- NT
- TSPS

3 Verify that new RONI trunks can be added with PROTOCOL set to NT and TSPS.

4 Change PROTOCOL from NT to TSPS and verify that call processing still performs.

5 Verify that a change from TSPS to NT still performs properly.

When the TRKGRP table, SIGINFO field is set to REVSIG=Y and CXRFAIL=ON conduct the following calls.

6 Verify call handling with the PROTOCOL field set to TSPS.

1. Originate an ANI Fail call.
2. Verify that the call goes to a TOPS position with RCAMA flashing on the screen. Operator attached signal is sent when position is actually attached.
3. Key in an invalid ANISPILL for that end office and verify that the call leaves the position. Call returns as a RONI recall (RCAMA) with 7-digits flashing.
4. Verify that the call does not leave position until a valid number is entered. Operator-attached signal is sent when position is actually attached.
5. Wait 60 seconds then disconnect.

7 Verify call handling with the PROTOCOL field set to TSPS.

1. Originate an ONI call.
2. Verify that the call goes to a TOPS position with RCAMA on screen. Operator-attached signal is sent when position is actually attached.
3. Key in an invalid ANISPILL for that end office and verify that the call leaves the position. Call returns as a RONI recall with 7-digits flashing and RCAMA on the screen.

4. Verify that the call does not leave position until a valid number is entered. Operator-attached signal is sent when position is actually attached.
5. Wait 60 seconds then disconnect.

8 Verify call arrival with the PROTOCOL field set to TSPS.

1. Originate an ANI Fail call.
2. Verify that the call goes to a TOPS position with RCAMA flashing on the screen. The operator-attached signal is sent when position is actually attached.
3. Key in a valid ANISPILL for that end office. Call leaves the TOPS position.
4. Wait 60 seconds then disconnect.
5. Verify that billing and switching is done at the originating toll office.

9 Verify call arrival with the PROTOCOL field set to TSPS.

1. Originate an ONI call.
2. Verify that the call goes to a TOPS position with RCAMA on screen. Operator-attached signal is sent when position is actually attached.
3. Key in a valid ANISPILL for that end office. Call leaves the TOPS position.
4. Wait 60 seconds then disconnect.
5. Verify that billing and switching is done at the originating toll office.

When the TRKGRP table, SIGINFO field is set to REVSIG=N and CXRFAIL=ON conduct the following calls.

10 Verify call handling with the PROTOCOL field set to TSPS.

1. Originate an ANI Fail call.
2. Verify that the call goes to a TOPS position with RCAMA flashing on the screen. Operator-attached signal is sent when position is actually attached.
3. Key in an invalid ANISPILL for that end office. Verify that the call leaves the position. Call returns as a RONI recall (RCAMA) with 7-digits flashing.
4. Verify that the call did not leave the position until a valid number is entered and the operator-attached signal is sent.
5. Wait 60 seconds then disconnect.

11 Verify call handling with the PROTOCOL field set to TSPS.

1. Originate an ONI call.
2. Verify that the call goes to a TOPS position with RCAMA on screen. Operator-attached signal is sent when position is actually attached.
3. Key in an invalid ANISPILL for that end office.
4. Verify that call leaves the position. Call returns as a RONI recall (RCAMA) with 7 digits flashing.

TOPS Remote CAMA (continued)

5. Verify that the call does not leave the position until a valid number is entered and the operator-attached signal is sent to the postion when the position is actually attached.
6. Wait 60 seconds then disconnect.

12 Verify call arrival with the PROTOCOL field set to TSPS.

1. Originate an ANI Fail call.
2. Verify that the call goes to a TOPS position with RCAMA flashing on the screen. Operator-attached signal is sent when position is actually attached.
3. Key in a valid ANISPILL for that end joffice. Call leave the TOPS position.
4. Wait 60 seconds then disconnect.
5. Verify that billing and switching is done at the originating toll office.

13 Verify call arrive with the PROTOCOL field set to TSPS.

1. Originate an ONI call.
2. Verify that the call goes to a TOPS position with RCAMA on the screen. Operator-attached signal is sent when position is actually attached.
3. Key in a valid ANISPILL for that end office. Call leaves the TOPS position.
4. Wait 60 seconds then disconnect.
5. Verify that billing and switching is done at the originating office.

Translations table flow

Translations table flow is not provided for TOPS Remote CAMA.

Limitations and restrictions

The following limitations and restrictions apply to TOPS Remote CAMA:

- BR0172 - RONI/CKO Function
  - — TOPS RONI must be compatible with any type of switch that follows the Blue Book Signaling Standards for RONI.
- BR0602 - Remote ONI Via OC
  - — In the standalone TOPS, it takes slightly longer (1%) to process a RONI call due to gating of operator interactions.
  - — In an OC configured office, it takes longer (15 percent over standalone) to process a RONI call in the remote switch due to gating and messaging involved.

Interactions

The following paragraphs describe the interactions between TOPS Remote CAMA and other functionalities.

BR0498 - RONI Supervisory Signal Change

TOPS Remote CAMA works in conjunction with the standard TOPS package and is compatible with the following features:

- TOPS Inward Validation, OSB00101
- Host OC DataLink, OSB00101
- TOPS NOTIS Format, OSB00101
- Remote OC Datalink, OSB00101
- TOPS City Zone Rating, OSB00101

BR0602 - Remote ONI Via OC

TOPS Remote CAMA works in conjunction with offices configured with TOPS OC. It is available for both TOPS environments.

Activation/deactivation by the end user

TOPS Remote CAMA requires no activation or deactivation by the end user.

Billing

TOPS Remote CAMA does not affect billing.

Station Message Detail Recording

TOPS Remote CAMA does not affect Station Message Detail Recording.

Datafilling office parameters

There are no service orders or office parameters affected by the TOPS Remote CAMA feature package.

Datafill sequence

The following table lists the tables that require datafill to implement TOPS Remote CAMA. The tables are listed in the order in which they are to be datafilled.

Datafill tables required for TOPS Remote CAMA

Table	Purpose of table
CLLI	Common Language Location Identifier. Uniquely identifies the far end of each announcement, tone, trunk group, test trunk, national milliwatt test lines, and service circuit.
TRKGRP	Trunk Group. Contains information about trunk groups and describes the attributes of an entire group of RONI circuits.

TOPS Remote CAMA (continued)

Datafill tables required for TOPS Remote CAMA

Table	Purpose of table
TRKSGRP	Trunk Subgroup. Contains information about each subgroup associated with a trunk group defined in Table TRKGRP.
TRKMEM	Trunk Member. Lists the data for each trunk specified in the trunk group and subgroup tables.
TMINV	Trunk Module Inventory. This table lists assignment data for each Trunk Module.

Datafilling table CLLI

The CLLI table describes the Common Language Location Identifier (CLLI) list and the Common Language Location Identifier Name (CLLINAME) table. The CLLI code identifies the trunk group uniquely.

Datafill example for table CLLI

The following example shows sample datafill for table CLLI.

MAP display example for table CLLI

```
CLLI      TRKGRSIZ                    ADMININF
-------------------------------------------------------
RONI1       10                  EANDM_REVSIG_Y_CXRFAIL_Y
RONI2       10                  EANDM_REVSIG_Y_CXRFAIL_N
RONI3       10                  EANDM_REVSIG_Y_CXRFAIL_Y
RONI4       10                  EANDM_REVSIG_Y_CXRFAIL_N
```

Datafilling table TRKGRP

The Trunk Group table TRKGRP describes the attributes of an entire group of RONI circuits. Each remote toll office can MAP a single RONI group. The group type RONI prompts for the following fields:

The following table shows the datafill specific to TOPS Remote CAMA for table TRKGRP. Only those fields that apply directly to TOPS Remote CAMA are shown. For a description of the other fields, refer to the data schema section of this document.

Datafilling table TRKGRP

Field	Subfield or refinement	Entry	Explanation and action
PROTOCOL		NT or TSPS	Provides distinction between Northern Telecom (NT) and Traffic Service Positions System (TSPS) signaling with respect to when "position attached" supervision is returned to the calling CAMA office. When NT, position attached signal should be returned to the CAMA office right after trunk seizure. NT is the default value. When TSPS, position attached signal should be returned only after a position is connected.
SIGINFO			Defines the hardware signaling type (E&M or loop). When E&M is specified, the REVSIG and CXRFAIL options apply.
	REVSIG	Y or N	Specified to indicate the supervision expected from the originating office. The field should be set to "N" (NO) if the single frequency sets used with E&M signaling cut transmission on the voice trunk when the M lead changes. ***Note:*** If transmission cutting does not occur, set the field to "Y" (YES). The transmission prevents the TOPS office from receiving zip tones.

TOPS Remote CAMA (continued)

Datafilling table TRKGRP

Field	Subfield or refinement	Entry	Explanation and action
	CXRFAIL	ON or OFF	Specifies the supervision sent from the TOPS RONI office to the origination office over the data trunk. The field should be set to "OFF" if the "position occupied" signal to the originating office is the same as a "carrier fail" signal on the data trunk. The "position occupied" signal causes problems because a carrier loss allows the originating office's attempts to seize the outgoing RONI circuit even though the carrier has been lost. This problem is corrected by inverting the received supervision with hardware at the originating office and inverting the sent supervision in software at the TOPS RONI office. The two inversions cancel out in a normal case, but if a carrier fail occurs, the hardware at the originating office receives a "busy position" signal rather than a "position occupied" signal. If the carrier fails in the "busy position" mode, then set this field to "ON".
NBECID		0000-9999	Non-BOC exahange carrier ID. Associates a 4 digit Non-Bell Exchange Carrier (NBEC) code with calls incoming on RONI trunk groups. The term NBEC typically refers to an independent Operating Company that has contracted with another Operating Company to provide its operator services. The NBECID is used to identify calls handled by the TOPS switch for the NBEC. The correct NBEC code should be datafilled on RONI trunk groups (where applicable) following the BCS upgrade. Default vvalue is 0000. (new field in BCS 28)
SNPA		000-999	In offices that serve more than one NPA, the SNPA field will have to be modified on some RONI trunk groups, since it will automatically be set to the NPA which appears at the top of table HNPACONT. The Operating Company should verify the SNPA following the BCS upgrade in order to ensure that the true NPA will appear in their EBAF records. The default value is the first NPA datafilled in table HNPACONT. (new field in BCS 28)

Datafill example for table TRKGRP

The following example shows sample datafill for table TRKGRP.

MAP display example for table TRKGRP

```
TABLE:  TRKGRP

GRPKEY                  GRPINFO
-------------------------------------------------------
RONI1      RONI 0 NPDGP NCRT IC  NT EANDM Y ON  2541  613
RONI2      RONI 0 NPDGP NCRT IC  NT EANDM Y ON  5983  919
RONI3      RONI 0 NPDGP NCRT IC  NT EANDM Y OFF 0000  613
RONI4      RONI 0 NPDGP NCRT IC  NT EANDM Y ON  0000  613
```

Datafilling table TRKSGRP

The Trunk Subgroup table TRKSGRP describes supplementary signaling information for RONI circuits. There is one subgroup for every RONI group. The TRKSGRP table is used in exactly the same way as regular trunks.

Datafill example for table TRKSGRP

The following example shows sample datafill for table TRKSGRP.

MAP display example for table TRKSGRP

```
TABLE:  TRKSGRP

SGRPKEY   CARDCODE               SGRPVAR
-------------------------------------------------------
RONI1 0   2X81AA     STD IC NP  WK N 10 10 IB IB H N N M
RONI2 0   2X81AA     STD IC NP  WK N 10 10 IB IB H N N M
RONI3 o   DS1SIG     STD IC NP  WK N 10 10 IB IB H N N M
RONI4 0   DS1SIG     STD IC NP  WK N 10 10 IB IB H N N M
```

Datafilling table TRKMEM

The Trunk Member table TRKMEM lists the data associated with each analog or digital trunk assigned to one of the trunk groups and subgroups. This table defines one trunk in a RONI circuit pair. Pairs of trunks must associate with a single RONI circuit at the customer level. When datafilling RONI circuits, the following rules must be followed.

TOPS Remote CAMA (continued)

For analog trunks:

- voice and data trunks must reside on the same card.
- voice and data trunks must be consecutive on that card.
- voice trunks must be even circuits, data trunks odd circuits.

For digital trunks:

- voice and data trunks must reside on the same card.
- voice trunks must reside in time slots 1-4, 9-12 or 17-20.
- data trunks must reside in time slot (voice trunk + 4).

Altering the trunk group tuple is the only tuple change required for RONI.

Datafill example for table TRKMEM

The following example shows sample datafill for table TRKMEM.

MAP display example for table TRKMEM

```
EXTRKNM SGRP                MEMVAR
-----------------------------------
RONI1 0    0              TM8    6 12
RONI1 1    0              TM8    6 13
RONI2 0    0              TM8    3 14
RONI2 1    0              TM8    3 15
RONI3 0    0              DCM  0 0  1
RONI3 1    0              DCM  0 0  5
RONI4 0    0              DTC  1 7 12
RONI4 1    0              DTC  1 7 16
```

Datafilling table TMINV

The Trunk Module Inventory table TMINV lists the assignment data for each trunk module. In table TMINV, the peripheral with the service circuit must have the AUTOVON exec AMTMEX.

Datafilling table TMINV

Field	Subfield or refinement	Entry	Explanation and action
EXECS		AMTMEX	In table TMINV, the peripheral with the service circuit must have the AUTOVON exec AMTMEX.

Datafill example for table TMINV

The following example shows sample datafill for table TMINV.

MAP display example for table TMINV

```
TMNM FRTYPE FRNO SHPOS FLOOR ROW FRPOS NMNO NMPORT EQPEC
LOAD      EXECS
------------------------------------------------------
STM 1  TME    5    4     0    B    7     1     7  7X3001
NTMKA01  AMTMEX
```

Translation verification tools

TOPS Remote CAMA does not use translation verification tools.

SERVORD

TOPS Remote CAMA does not use SERVORD.

TOPS Robustness

Ordering codes

Functional group ordering code: OSB00101

Functionality ordering code: not applicable

Release applicability

TOPS07 and up

TOPS Robustness was introduced in TOPS04.

Prerequisites

To operate, TOPS Robustness requires the following:

- Functionality BAS Generic, BAS00003
- Table TOPSFTR paramter TOPS_ON_OFF_SWITCH = Y

Description

This functionality increases table size, removes the restart requirement for some office parameters and fixed CLLIs, and eliminates other office parameters. These changes are provided to increase table capability, simplify operation, and reduce the number of outages due to restarts.

Also, peripheral module intercept system test (PMIST) messages are now decoded and formatted for operator centralization (OC), Personal Audio Response (PARS), and Automated Alternate Billing Service (AABS) protocols. Previously, these messages were in a hexadecimal format.

This functionality is provided by the following features:

Feature number	Feature name
AN1379	TOPS Robustness Telecom Layer Changes: Tables LCASCRCN and TRKGRP
AN1455	TOPS04 Robustness: Restart Elimination - Office Parameters
AN1456	TOPS04 Robustness: Restart Elimination - TOPSPOS and Associated Office Parameters
AF5918	Parm E1 Outage Robustness Plan for CSP04 (contains changes to TOPS04 layer)
AN1856	TOPS Debugging Tools

Operation

Avoiding E1 outage

The restart requirement is not removed for the following tables. However, the MTCSWACT utility introduced in NA004 should be used to avoid an E1 outage.

- DATASIZE/TRKGRP
- DATASIZE/CLLI
- TOPSDEV

Compatibility

These base changes can coexist with all TOPS products and services.

TOPS debugging tool

Previously, PMIST messages were decoded and formatted for open position protocol (OPP) and directory assistance (DA). These changes were provided by features AF2861 (OPP Utilities) and PRSDOC BK01223 (Protocol Messages Left In Hex Format By PMIST).

The following figure is an example of an OC PMIST message (all fields are not represented in this example). The message is displayed in both the hexadecimal and decoded formats.

Example decoded and formatted OC PMIST message

```
INCOMING  13:18:02.65  NODE TYPE= DCM_NODE   TOPS_DATA_LINK_MSG
NN= 0017  TN= 0001  MSGTAG= 01  ROUTE= 0A80  ERROR= 00  LENGTH= 3F
AGENT= CKT        TOCDLOG2    1
AB 00 FC 1C 00 E5 AA AA AA AA AA A0 80 AA AA 60 3E 00 00 1D 08 20 36
31 00 20 32 32 32 2D 31 32 33 34 7E 02 FF 9B FF FF FF FF FF FF FF FF
FF FF FF FF 00 00 00 00 00
-------------------------------------------------------------------
MT                      =  TOPS_DATA_LINK_MSG
OPR_EVENT               =  REQUEST_OPR
HOLD_REASON             =  NIL_HOLD_REASON
REASON                  =  CALL_SETUP
AP_NO                   =  UNASSIGNED
PARS_OFFERING           =  UNASSIGNED
FLOOR_PLAN_NUMBER       =  571
OPERATOR_NUMBER         =  62
PARS_HOST_NODE          =  UNKNOWN
```

New parameters in tables TOPSPARM and VSNOPT enable these changes. Refer to the datafill procedure section.

TOPS Robustness (continued)

SOC

Software Optionality Control (SOC) is not used since this functionality is not optional.

Translations table flow

TOPS Robustness has no translations table flow.

Limitations and restrictions

The following limitations and restrictions apply to TOPS Robustness:

- It is not recommended to change the value of TOPS_EQUAL_ACCESS OFFICE while calls are in progress. Calls may be dropped if this is done.
- The maximum size of Table TOPSPOS is the maximum number of TOPS positions allowed, 1023.
- Memory can only be returned to the system by deleting all tuples in Table TOPSPOS.

Interactions

TOPS Robustness has no functionality interactions.

Activation/deactivation by the end user

TOPS Robustness requires no activation or deactivation by the end user.

Billing

TOPS Robustness does not affect billing.

Station Message Detail Recording

TOPS Robustness does not affect Station Message Detail Recording.

Datafilling office parameters

The following table shows the office parameters used by TOPS Robustness. For more information about office parameters, refer to *Office Parameters Reference Manual.*

Office parameters used by TOPS Robustness

Table name	Parameter name	Explanation and action
OFCENG	TOPS_ASST_ POS	This parameter is deleted. Prior to deletion, this parameter defined the maximum number of assistant positions allowed at a site. The number of assistant positions at a site is determined by the number of assistant positions assigned in Table TOPSPOS. Due to TOPSPOS changes, this parameter is no longer necessary. However, the maximum of 126 assistant positions per TOPS office is still applicable.
OFCENG	TOPS_ACCS_ ACG_SIZE	This parameter is deleted. Its function is now automatically performed by the system.
OFCENG	TOPS_EQUAL_ ACCESS_OFFICE	The restart requirement is removed. Note, calls in progress may be affected by decreasing this parameter. This parameter (in conjunction with field LATA in Table TOPEATRK) activates Equal Access features for each TOPS trunk group. There is a potential for calls to be trapped when this parameter is changed. A warning message is issued stating that calls may trap when this parameter is changed. Verification: If this parameter is set to Y, confirm that an equal access call can be made. If this parameter is set to N, confirm that an equal access call cannot be made.

TOPS Robustness (continued)

Office parameters used by TOPS Robustness

Table name	Parameter name	Explanation and action
OFCENG	TOPS_MAX_ OPERATOR_ NUM	This parameter is deleted. Internal logic now determines when and how to dynamically handle items previously controlled by this parameter. Prior to deletion, this parameter specified the maximum operator number that can log into a TOPS operator position. Verification: In a lab environment only, attempt to use an operator number in table OPRDAT or OPRCMPLX above the value prior to this functionality for TOPS_MAX_OPERATOR_NUM. If the data is allowed in OPRDAT or OPRCMPLX, the dynamic logic for maximum operator number is working correctly. Storage is allocated to accommodate the highest number assigned. This storage is not returned to the system until the next restart.
OFCENG	TOPS_NUM_ STUDY_REG	This parameter is deleted. All storage for study registers is allocated at IPL time. The maximum number of allowable study registers is still 900. Prior to deletion, this TOPS ACD only parameter determined the number of study registers available during TOPS training. Verification: Confirm that the assigned study register can be used. Execute the RQ SADS/TADS command to verify that the correct number of study registers are allocated.
OFCENG	TOPS_NUM_ TRAFFIC_ OFFICES	The restart requirement is removed when changing this parameter. This parameter now serves a slightly different function. It is used to determine if the TOPS office is a single or multi-team office. It no longer determines how much storage is allocated. Enter 1 to indicate a single team office and greater than 1 to indicate a multiple team office. There are checks to assure that the team number entered in table TOPSPOS is not greater than the value of this parameter. If this parameter is increased from a value of 1, this implies that the office is being changed from a single to a multiple-team office. Table TOPSDEV will have to be changed to include multiple team TOPS devices instead of the single team devices that exist there (if any).

Office parameters used by TOPS Robustness

Table name	Parameter name	Explanation and action
OFCVAR	TOPS_START_ OF_DAY	The restart requirement is removed. This parameter determines when (using the 24 hour clock) TOPS Force Management 24 hour Statistics start printing and FM data is reset. This parameter applies only to ACD. Now, the system waits until the new TOPS_START_OF_DAY time to reset the FM data. Verification: Confirm that the cold restart recommended message is not displayed when this parameter is changed. And, confirm that the FM data continues to accumulate and begins printing at the newly assigned start of day after this parameter is changed. Change examples: • If the parameter is set to 6:00 a.m., the time is 8:00 a.m., and the parameter is changed to 7:00 a.m. Then, the 6 hour report will print at 13:00. And, the 24 hour report will print at 7:00 a.m. the next day. • If the parameter is set to 6:00 a.m., the time is 6:45 a.m., and the parameter is changed to 7:00 a.m. Then, the 6 hour report will print at 7:00 a.m. And, the 24 hour report will print at 6:00 and 7:00 a.m. the same day, then only at 7:00 a.m. the following day. • If the parameter is set to 6:00 a.m., the time is 4:45 a.m., and the parameter is changed to 5:00 a.m. Then, the next 6 and 24 hour report will print at 5:00 a.m. No 6 or 24 hour report will print at 6:00 a.m.
OFCENG	TOTAL_ROUTE_ QUEUED_CALLS	The restart requirement is removed when increasing this parameter. However, decreasing this parameter still requires a restart.

Datafill sequence

The following table lists the tables that require datafill to implement TOPS Robustness. The tables are listed in the order in which they are to be datafilled.

Datafill tables required for TOPS Robustness

Table	Purpose of table
CLLI	Identifies far end of each tone, announcement, and trunk group
TOPSPOS	TOPS Positions defines each TOPS position by type and location.

TOPS Robustness (continued)

Datafill tables required for TOPS Robustness

Table	Purpose of table
LCASCRCN	Local Calling Area Screening contains the subtable LCASCR names
TRKGRP (TOPS)	Trunk Group type TOPS defines trunk group characteristics
TOPSBC	TOPS Billing Codes contains billing related information.
TOPSPARM	TOPS Parameters control various capabilities for the TOPS office.
VSNOPT	Voice Service Node Options contains AABS related parameters.

Datafilling table CLLI

The following table shows the datafill specific to TOPS Robustness for table CLLI. Only those fields that apply directly to TOPS Robustness are shown. For a description of the other fields, refer to the data schema section of this document.

Datafilling table CLLI

Field	Subfield or refinement	Entry	Explanation and action
CLLI		TOPSCOINCOLLECT TOPSCOINRETURN TOPSCOINENABLE TOPSCOINDISABLE	The restart requirement is removed for these fixed CLLIs.

Datafill example for table CLLI

The following example shows sample datafill for table TRKGRP (TOPS).

MAP display example for table CLLI

```
CLLI                    ADNUM    TRKGRSIZ    ADMININF
-------------------------------------------------------------------
TOPSCOINCOLLECT          100        24       TOPS
TOPSCOINRETURN           101        24       TOPS
TOPSCOINENABLE           102        24       TOPS
TOPSCOINDISABLE          103        24       TOPS
```

Datafilling table TOPSPOS

Effective TOPS04, the restart requirement is eliminated when changing the size of table TOPSPOS. Prior to this functionality, the procedure to change size was as follows:

- Delete all tuples in table TOPSPOS.
- Increase the value of field TRKGRSIZ in table CLLI for both TOPSPOS and TOPSPOSDATA cllis.
- Perform a cold/reload restart.
- Re-add the tuples to table TOPSPOS.

Now, the procedure to change size is as follows:

- Increase the value of TRKGRSIZ in table CLLI for both TOPSPOS and TOPSPOSDATA cllis.
- Add the new tuples in Table TOPSPOS. No restart is required.

Deallocation of memory is not changed, all tuples must still be deleted as follows:

1. Delete all tuples in table TOPSPOS
2. Change the value of field TRKGRSIZ in table CLLI for both TOPSPOS and TOPSPOSDATA CLLIs to value 0.
3. Change the value of field TRKGRSIZ in table CLLI for both TOPSPOS and TOPSPOSDATA CLLIs to the new desired size.
4. Add or re-add desired tuples to table TOPSPOS. No restart is required.

Datafilling table LCASCRCN

The maximum size of table LCASCRCN is increased from 256 to 1024 tuples. The first tuple is reserved for the value No Local Screening (NLCA) and is always present. This functionality allows an additional 1023 tuples, adding up to a possible 1024 tuples.

Datafilling table TRKGRP (TOPS)

The following table shows the datafill specific to TOPS Robustness for table TRKGRP (TOPS). Only those fields that apply directly to TOPS Robustness

TOPS Robustness (continued)

are shown. For a description of the other fields, refer to the data schema section of this document.

Datafilling table TRKGRP (TOPS)

Field	Subfield or refinement	Entry	Explanation and action
NOBILLCD		0 to 999	No Billing Code. The range of this field is expanded from 0-63 to 0-999. This field indicates the maximum number of NXXs per TOPS trunk group that can be defined in table TOPSBC. All TOPS trunk group types except those with a CLGID of DANI or OPENUM are affected by this change

Datafill example for table TRKGRP (TOPS)

The following example shows sample datafill for table TRKGRP (TOPS).

MAP display example for table TRKGRP (TOPS)

```
GRPKEY
                                                              GRPINFO
------------------------------------------------------------------------
TBELLIC1
   TOPS 0 TLD NCRT IC MIDL 619 PTOP NLCA NSCR Y SP COMBINED N Y 0
   0000 NONE BELL 16 10 10 Y N OFFHK N N
```

Datafilling table TOPSBC

The maximum number of tuples per TOPS trunk group is increased from 63 to 999.

Datafill example for table TOPSBC

The following example shows sample datafill for table TOPSBC.

MAP display example for table TOPSBC

```
CLLI          BILLCODE LCANAME SCRNCL ACTUALBC CHGCLSS
------------------------------------------------------
TBELLIC1         320    L32X    NSCR   619320    TOPS
TBELLIC1         321    L32X    NSCR   619321    TOPS
TBELLIC1         322    L32X    NSCR   619322    TOPS
TBELLIC1         351    L351    NSCR   619351    TOPS
TBELLIC1         520    NLCA    NSCR   619520    TOPS
```

Datafilling table TOPSPARM

The following table shows the datafill specific to TOPS Robustness for table TOPSPARM. Only those fields that apply directly to TOPS Robustness are shown. For a description of the other fields, refer to the data schema section of this document.

Datafilling table TOPSPARM

Parameter	Explanation and action
OC_PMIST__FORMAT	This parameter enables decoding and formatting of the PMIST message for the operator centralization (OC) protocol. The range is OFF and FULL. When set to OFF, the message is displayed in hexadecimal format. When set to FULL, the message is displayed in both the hexadecimal and decoded formats. The default is OFF.
PARS_PMIST_FORMAT	This parameter enables decoding and formatting of the PMIST message for the personal audio response (PARS) protocol. The range is OFF and FULL. When set to OFF, the message is displayed in hexadecimal format. When set to FULL, the message is displayed in both the hexadecimal and decoded formats. The default is OFF.

Datafill example for table TOPSPARM

The following example shows sample datafill for table TOPSPARM.

MAP display example for table TOPSPARM

```
PARMNAME                              PARMVAL
-----------------------------------------------------
OC_PMIST__FORMAT                      FULL
PARS_PMIST_FORMAT                     OFF
```

TOPS Robustness (end)

Datafilling table VSNOPT

The following table shows the datafill specific to TOPS Robustness for table VSNOPT. Only those fields that apply directly to TOPS Robustness are shown. For a description of the other fields, refer to the data schema section of this document.

Datafilling table

Parameter	Explanation and action
FORMAT_PMIST_MPC_AABS_MSG	This parameter enables decoding and formatting of the PMIST message for the automated alternate billing service (AABS) protocol. The range is OFF and FULL. When set to OFF, the message is displayed in hexadecimal format. When set to FULL, the message is displayed in both the hexadecimal and decoded formats. The default is OFF.

Datafill example for table VSNOPT

The following example shows sample datafill for table VSNOPT.

MAP display example for table VSNOPT

```
PARMNAME                                PARMVAL
--------------------------------------------------------
FORMAT_PMIST_MPC_AABS_MSG       FULL
```

Translation verification tools

TOPS Robustness does not use translation verification tools.

SERVORD

TOPS Robustness does not use SERVORD.

TOPS11 Robustness and Real Time Recovery

Ordering codes

Functional group ordering code: OSB00101

Functionality ordering code: not applicable

Release applicability

TOPS11 and up

TOPS11 Robustness and Real Time Recovery was introduced in TOPS11.

Prerequisites

To operate, TOPS11 Robustness and Real Time Recovery requires the following:

- Functionality BAS Generic, BAS00003
- Table TOPSFTR paramter TOPS_ON_OFF_SWITCH = Y

Description

This functionality improves reliablity, maintainablity, and real time performance without changing external behavior.

This functionality is provided by the following feature:

Feature number	Feature name
AF7573	TOPS Robustness and Real Time Recovery

Operation

There are no changes to external behavior.

Translations table flow

The TOPS11 Robustness and Real Time Recovery does not have a translations table flow.

Limitations and restrictions

TOPS11 Robustness and Real Time Recovery has no limitations or restrictions.

Interactions

All other feature functionality is preserved exactly.

TOPS11 Robustness and Real Time Recovery (end)

Activation/deactivation by the end user

TOPS11 Robustness and Real Time Recovery requires no activation or deactivation by the end user.

Billing

TOPS11 Robustness and Real Time Recovery does not affect billing.

Station Message Detail Recording

TOPS11 Robustness and Real Time Recovery does not affect Station Message Detail Recording.

Datafilling office parameters

TOPS11 Robustness and Real Time Recovery does not affect office parameters.

Datafill sequence

There are no datafill requirements.

Translation verification tools

TOPS11 Robustness and Real Time Recovery does not use translation verification tools.

SERVORD

TOPS11 Robustness and Real Time Recovery does not use SERVORD.

TOPS SDM Interworking

Ordering codes

Functional group ordering code: OSB00101

Functionality ordering code: not applicable

Release applicability

TOPS14 and up

TOPS14 introduced TOPS SDM Interworking.

Requirements

To operate, TOPS SDM Interworking requires the following:

- Functionality BAS Generic, BAS00003
- Table TOPSFTR paramter TOPS_ON_OFF_SWITCH = Y

Description

This feature supports TOPS Bellcore AMA Format (BAF) on the Supernode Data Manager (SDM).

This functionality consists of the following feature:

Feature number	Feature name
59022240	TOPS Interworking with SDM

Operation

On the SDM, the Supernode Billing Application (SBA) is the AMA vehicle for AMA Data Networking System (AMADNS) on the DMS family of switches. With SBA, the billing records are still formatted on the Core and sent to the SDM for storage and transferred to the downstream processor. The SBA also provides tools similar to AMADUMP to search the billing files for particular records and structures.

Note: Only BAF is supported for TOPS billing on the SDM. TOPS Detailed Recording (TDR) is not supported.

The SBA includes software components that run under two hardware units in the DMS switch: the computing module (CM) and the SDM. The primary purpose of SBA is to receive AMA records from the CM, move them to the SDM, perform processing and routing on those records, and then send them as billing files to the Operator Company's downstream processor(s).

TOPS SDM Interworking (continued)

The SBA system is shown in the following figure.

SBA system

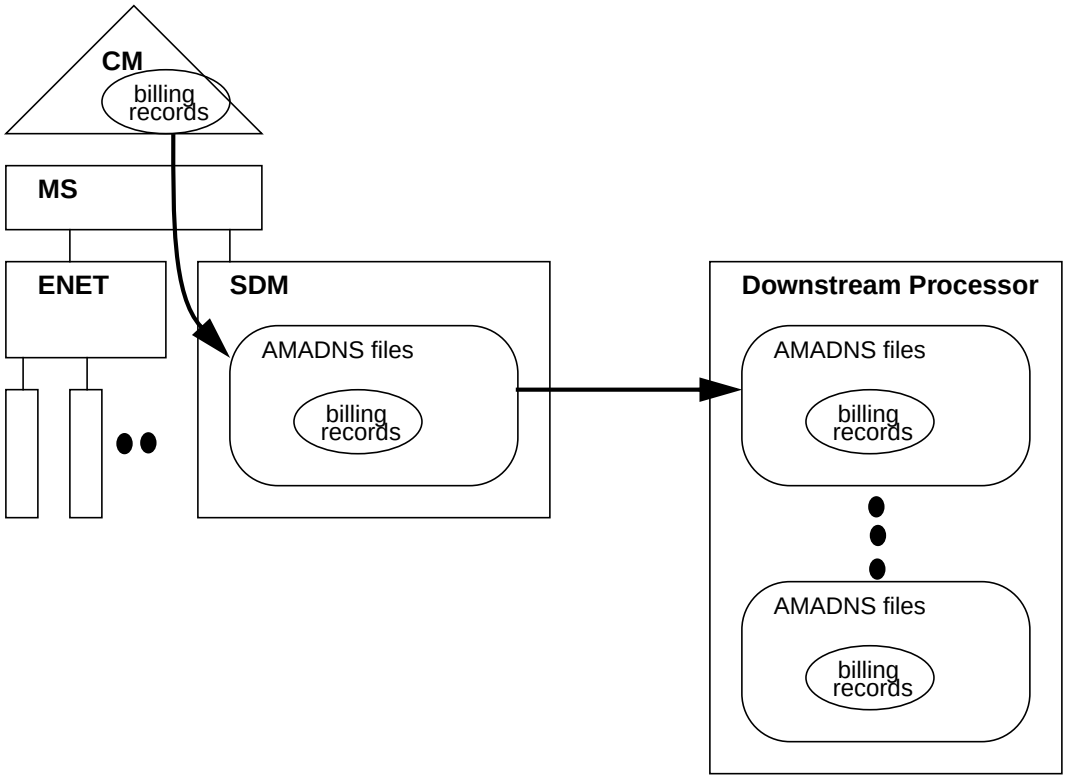

No new capabilities are added to SBA. Refer to NTP 297-5051-300, *DMS100 Family Supernode Data Manager Billing Application Guide*, for more information.

Translations table flow

This feature has no translations table flow.

Limitations and restrictions

TOPS SDM Interworking has no limitations or restrictions.

Interactions

TOPS SDM Interworking does not interact with other functionalities.

TOPS SDM Interworking (end)

Activation and deactivation by the user

TOPS SDM Interworking does not require activation or deactivation by the user.

Billing

TOPS SDM Interworking does not generate billing records or changes.

Station Message Detail Recording

TOPS SDM Interworking does not require Station Message Detail Recording.

Office parameters used by TOPS SDM Interworking

TOPS SDM Interworking does not generate office parameters.

Datafill sequence

There is no datafill requirement.

Translation verification tools

TOPS SDM Interworking does not use translation verification tools.

SERVORD

TOPS SDM Interworking does not use the Service Order System (SERVORD).

TOPS Service Billing

Ordering codes

Functional group ordering code: OSB00101

Functionality ordering code: not applicable

Release applicability

BCS28 and up

Prerequisites

To operate, TOPS Service Billing requires the following:

- Functionality BAS Generic, BAS00003
- Table TOPSFTR paramter TOPS_ON_OFF_SWITCH = Y

Description

This functionality is provided by the following features:

Feature number	Feature name
BR0622	

TOPS Service Billing provides Operating Companies with the ability to route directory assistance calls to the operator for billing on all service classes. TOPS Service Billing provides a class of rating known as "service," and a mechanism to identify called numbers as service numbers. Operating Companies can specify rating information on a 3-, 7-, or 10-digit basis.

TOPS allows Operating Companies to rate three different classes of calls:

- domestic
- overseas
- local.

Rating for service billing calls is similar to rating for local calls because the charges are not a function of distance or time. However, unlike local calls, the determination of service billing calls is based entirely on the called digits dialed. An example of this type of call is a directory assistance call in which the calling subscriber dials NPA-555-1212. With BR0622, this type of call is a "service" call. This document describes the changes to TOPS that allow Operating Companies to rate "service" calls by specifying which numbers are service numbers and the charges for those service numbers.

Operation

The following paragraphs describe the operation of TOPS Service Billing.

Identifying Service Calls

Service calls are identified by the called number. Table SERVSCRN is a digilator and requires only minimum datafill to identify a service number. For example, if all 555 numbers are the same service type, the line numbers are not entered into table SERVSCRN. Only NPA-555 is entered for all NPAs. A number is a service number if it is in table SERVSCRN. Refer to the data schema section of this module for more information on table SERVSCRN.

Rating Service Calls

Numbers identified as service in table SERVSCRN are associated with service names. The service name is Operating Company-definable much like tariffs, schedules, or CLLI names. Table SERVNAME contains the service names. Service names are indexed to Table SRVRS. Table SRVRS defines the billing types. Table SRVRS has a 2-part key. The first part is the tariff. Tariffs are defined in table TARIFF and are customer- definable and based on the calling NPA and NXX. Table CLGTRF associates a name defined in Table TARIFF with a particular calling NPA or calling NPA NXX. The second part of the key is the service name obtained from table SERVSCRN. For each tariff and service name, there is an associated schedule and ratestep. Schedules and ratesteps exist in the rating system and specify charges for a call.

Toll Free Calls

Some Operating Companies do not charge for certain service numbers. For those Operating Companies, the service numbers are toll free. To allow Operating Companies to specify toll free service numbers, a symbol is predefined in table SERVNAME. The symbol is TOLLFREE. This symbol is used in Table SERVSCRN to indicate that a number (or a group of numbers) is toll free. Since no rating is done for a toll free call, the TOLLFREE symbol cannot appear in Table SRVRS. If a toll free number is dialed from a hotel or a coin phone, it bypasses operator handling in the same way that directory assistance calls bypass operators in areas that do not charge for Directory Assisted (DA) service.

Verification

To verify that the datafill provides successful call processing, after the datafill procedure is completed, perform the following call sequence. This call sequence occurs when a 1+5551212 call originates from a coin phone.

Verification of TOPS Service Billing (1+5551212 call originating

TOPS Service Billing (continued)

from a coin phone)

At your location

1 Originate a 1+5551212 call.

2 Verify operator interaction.

3 Verify Operator Position indicates a 1+ call.

4 Verify that operator keys KP FWD plus 5551212 plus START.

5 Verify that CLDNO is 5551212 and SRV appears on screen.

6 Verify that operator requests charge class and collects deposit.

7 Verify that call is routed to a DA center or terminates to an outgoing trunk.

8 Verify that LOGS indicate an AMAB record for the call.

Verify the following call sequence when a 1+5551212 LOCALDA call is originated from a HOTEL PBX line.

Verification of TOPS Service Billing (1+5551212 LOCALDA call originating from a HOTEL PBX line)

At your location

1 Originate a 8+1+5551212 call.

2 Verify operator interaction.

3 Verify that Operator Position indicates a HOTEL 1+ call.

4 Verify that operator requests name and room number.

5 Verify that operator keys OGTKEY2.

6 Verify that CLDNO is 5551212 and SRV appear on screen.

7 Verify that operator requests charge class.

8 Verify that call is routed to a DA center or terminates to an outgoing trunk.

9 Verify that billing information is sent either to an Autoquote (AQ) or to a Voicequote (VQ).

10 Verify that LOGS indicate an AMAB record for the call.

Verify the following call sequence when a 0- call is made from a 1FR line.

Verification of TOPS Service Billing (0-call made from a 1FR line)

At your location

1 Originate a 0- call.

2 Verify operator interaction.

3 Verify a 0- call at the Operator Position.

4 Verify that operator keys KP FWD plus 5551212 plus START.

5 Verify that operator requests charge class plus collects deposit.

6 Verify that call is routed to a DA center or terminates to an outgoing trunk.

7 Verify that LOGS indicate an AMAB record.

Verify the following call sequence when a 0+ LOCALDA call is originated from a HOTEL PBX line.

Verification of TOPS Service Billing (0+ LOCALDA call is originated from a HOTEL PBX line)

At your location

1 Originate a 8+0+ call.

2 Verify operator interaction.

3 Verify Operator Position indicates a HOTEL 0+ call.

4 Verify that operator requests name, room number, and appropriate information (for example, credit card number, third party billing).

5 Verify that operator keys OGTKEY2.

6 Verify that CLDNO is 5551212 and field SRV appears on screen.

7 Verify that operator requests charge class.

8 Verify that call is routed to a DA center or terminates to an outgoing trunk.

9 Verify that LOGS indicate an AMAB record for the call.

Verify MCCS compatibility with TOPS service billing numbers. This includes the verification of proper tones and announcements.

Verification of TOPS Service Billing (with MCCS compatibility)

At your location

1 Originate a FOREIGNDA 0+NPA+5551212 call from a coin station.

2 Listen for announcement and or tone.

3 Input 14 digit calling card number.

4 Listen for outpulsing of called number digits.

5 Verify that connection is made to DA center.

Verify ACTS flat rate charges for service billing numbers. This includes the verification of proper treatment and announcements.

Verification of TOPS Service Billing (ACTS flat rate charges)

At your location

1 Originate a LOCALDA 5551212 from a coin station which is compatible with ACTS.

2 Listen for initial announcement requesting deposit.

3 Deposit exact amount.

TOPS Service Billing (continued)

4 Listen for acknowledgment of correct deposit.

5 Verify that connection is made to DA center.

Datafill examples

The following example datafill illustrates how the tables are to be used to set up rating for service billing numbers.

Example 1

The Operating Company wants to have one charge for local long distance directory assistance and one charge for foreign long distance directory assistance. The Operating Company has defined a tariff called TARIFF1 and a schedule called SCHED1. Tariffs and schedules are described in the TOPS Rating System Description.

In this example, the only valid 555 number is 555-1212.

The Operating Company must define the service rating names to be used in Table SERVNAME. The rating names used are the predefined symbol TOLLFREE and the customer-defined symbols FOREIGNDA and LOCALDA. Refer to the following figure for sample datafill.

MAP display example for table SERVNAME

```
VALUE   SYMBOL
--------------------------------------------------------
1  TOLLFREE
2  FOREIGNDA
3  LOCALDA
```

The Operating Company must enter data in Table SERVSCRN. For each foreign NPA, there must be an entry in Table SERVSCRN indicating that NPA 555 is a service number and that it has a service rating name of FOREIGNDA. For 555, there must be an entry indicating that it has a service name of LOCALDA. Refer to the following figure for sample datafill.

MAP display example for table SERVSCRN

```
CALLED_NUMBER   SERVNAME
-----------------------------------------------------
202555  FOREIGNDA
203555  FOREIGNDA
204555  FOREIGNDA,
519555  FOREIGNDA
555     LOCALDA
602555  FOREIGNDA
603555  FOREIGNDA
604555  FOREIGNDA
919555  FOREIGNDA
```

Table SRVRS defines all directory assisted calls in a foreign NPA to receive one charge. Calls to local directory assistance receive another charge. The actual amount is specified using the standard charging tables and the specified schedule name and ratestep. Refer to the following figure for sample datafill.

MAP display example for table SERVRS

```
TARIFF  SERVNAME    SCHNAME RATESTEP
-----------------------------------------------------
TARIFF1 FOREIGNDA   SCHED1  1
TARIF1  LOCALDA     SCED1   2
```

Example 2

This example is an extension of the previous example. The Operating Company wants to do everything requested in the previous example, in addition to specifying different charges for 555-1212, 555-1111, and 555-1211. The Operating Company provides weather information if a subscriber dials 555-1111 and an exact time of day if the subscriber dials 555-1211.

To rate the following numbers differently, the Operating Company must datafill to the line number level in Table SERVSCRN. Refer to the following figures for sample datafill.

TOPS Service Billing (continued)

MAP display example for table SERVNAME

```
VALUE   SYMBOL
-------------------------------------------------------
1       TOLLFREE
2       FOREIGNDA
3       LOCALDA
4       WEATHERINFO
5       TIMEOFDAY
```

MAP display example for table SERVSCRN

```
CALLED_NUMBER   SERVNAME
-------------------------------------------------------
202555          FOREIGNDA
203555          FOREIGNDA
204555          FOREIGNDA
519555          FOREIGNDA
555             LOCALDA
602555          FOREIGNDA
603555          FOREIGNDA
604555          FOREIGNDA
919555          FOREIGNDA
5551111         WEATHERINFO
5551211         TIMEOFDAY
5551212         LOCALDA
```

For each number that must be rated differently, Table SRVRS defines a service rating name. Refer to the following figure for sample datafill.

MAP display example for table SRVRS

```
TARIFF  SERVNAME    SCHNAME RATESTEP
-------------------------------------------------------
TARIFF1 FOREIGNDA   SCHED1  1
TARIFF1 WEATHERINFO SCHED1  3
TARIFF1 TIMEOFDAY   SCHED1  4
TARIFF1 LOCALDA     SCHED1  2
```

Example 3

The Operating Company wants to treat all calls with an NXX of 555 as toll free. In this example, the only valid 555 number is 555-1212.

The special rating name of TOLLFREE is predefined in Table SERVNAME. For each foreign NPA, there must be an entry in Table SERVSCRN indicating that NPA 555 is a service number and that it has a service rating name of

TOLLFREE. NPA 555 must be datafilled as TOLLFREE. Refer to the following figures for sample datafill.

MAP display example for table SERVNAME

```
VALUE   SYMBOL
-------------------------------------------------------
1       TOLLFREE
```

MAP display example for table SRVSCRN

```
CALLED_NUMBER   SERVNAME
-------------------------------------------------------
202555          TOLLFREE
203555          TOLLFREE
204555          TOLLFREE
519555          TOLLFREE
555             TOLLFREE
602555          TOLLFREE
603555          TOLLFREE
604555          TOLLFREE
919555          TOLLFREE
```

There are no entries in Table SRVRS for toll free calls.

Service Rating (SRVRS) rates the billing types.

Translations table flow

The TOPS Service Billing does not have a translations table flow section.

Limitations and restrictions

The following limitations and restrictions apply to TOPS Service Billing:

- A maximum of 62 service names can be created by an Operating Company.
- A called number should not be datafilled as both a local call and a service call. If it is, the service designation is accepted.
- Calls to a service number must complete and an answer must be provided before the call can be rated. If the call is not completed, it is treated as other calls that do not complete or do not receive answer; that is, no charges are recorded for the call. For example, if a subscriber dials 1+555+1212 and the call routes to a TOPS operator who provides the directory assistance information without forwarding the call, the call cannot be rated. If the operator forwards the call, rating can be done at the Operator

TOPS Service Billing (continued)

Position. This situation would be important if the call originated from a coin phone.

Interactions

The following paragraphs describe the interactions between TOPS Service Billing and other functionalities.

Table SERVSCRN

When a called number listed in Table SERVSCRN is displayed at an Operator Position, the message "SRV" appears on line 4, column 21, on the Operator Position CRT.

Mechanized Calling Card Service and Automatic Coin Toll Service

TOPS Service Billing is compatible with the Mechanized Calling Card Service (MCCS) and with the Automatic Coin Toll Service (ACTS). A subscriber could dial 0 plus a service number and bill the number to his calling card. Also, a coin subscriber could dial 1 plus a service number and pay for the call without being routed to an operator. In the latter case, there is a good probability that the charges for a service call would not be a function of time. The ACTS announcement does not include a reference to time if the billing is not a function of time. Billing for a service number is not expected to be a function of time. A credit announcement is not given for overdeposits. A "THANK YOU" announcement is played and the forward number is outpulsed.

TOPS Equal Access translations

The DMS does not perform LATA screening for service numbers. Routing is based on the routes set by standard DMS translations. Refer to the functional group description on TOPS Equal Access for further information.

The marking of called numbers as service numbers in Table SERVSCRN has an effect on the ability of Operating Companies to route calls in an Equal Access environment. Some Operating Companies route directory assistance calls when the calling subscriber dials 555-1212, but an interLATA carrier routes the calls if the calling subscriber dials NPA-555-1212. The Operating Company would enter 555-1212 in Table SERVSCRN with an appropriate designation such as LOCALDA. The number would then route using standard DMS translation routes. The Operating Company would not enter NPA-555-1212 into Table SERVSCRN. The called numbers would index into LATA screening where they could be identified as interLATA calls and be routed using the TOPS Equal Access routing scheme.

Toll free (800) calls and Hotel 800 calls

Toll free Numbers (800) are still processed as usual. Hotel 800 calls continue to route to an operator for the collection of a room number if the hotel wants nocharge messages.

Note: Toll free numbers (that is, 800 numbers) are not allowed in Table SERVSCRN.

Rating service numbers

TOPS Service Billing applies to service numbers dialed by the calling subscriber and to service numbers completed by an operator. If the call has a forward number, the number retrieved from table OGT does not replace it. This presents a problem when rating service numbers. Service numbers must be in the called number field to rate the call. To overcome this problem, a boolean variable exists in table OGTKEY that indicates whether the outgoing trunk number replaces the called number. When this boolean variable is set, the operator can press the corresponding outgoing trunk key to display the new number in the Called Number Field.

Activation/deactivation by the end user

TOPS Service Billing requires no activation or deactivation by the end user.

Billing

Toll free calls and operator-handled calls (when the called number is datafilled in Table SERVSCRN as TOLLFREE) will receive a call code of 074. Code 074 indicates that a called number on a trunk group whose number is marked as TOLLFREE will route directly to the outgoing trunk. Calls dialed out from the operator marked as TOLLFREENO AMA will be displayed on the Operator Position CRT and the call can be released.

If an answer is required, START TIMING must be keyed before the operator can release the call. All other service type calls receive standard TOPS AMA processing, in which case the call code and structure code used is based on the class of service and the charge class of the calls.

Station Message Detail Recording

TOPS Service Billing does not affect Station Message Detail Recording.

Datafilling office parameters

TOPS Service Billing does not affect office parameters.

TOPS Service Billing (continued)

Datafill sequence

The following table lists the tables that require datafill to implement TOPS Service Billing. The tables are listed in the order in which they are to be datafilled.

Datafill tables required for TOPS Service Billing

Table	Purpose of table
SCHED	TOPS Rate Schedule. This table is used by the DMS Automatic Rating System to determine for a specified Rate Schedule.
OGTKEY	Outgoing Trunk Key. This table allows the Operating Company to service numbers which are dialed by the calling customer and to numbers completed by an operator.
SERVNAME	Services. This table identifies the protocol, data link type, and data base listing identifier for toll and assistance, directory assistance and intercept services.
SERVSCRN	Service Screen. This table lists the called number and the associated service name.
SRVRS	Service Rating. This table rates the billing types.

Datafilling table SCHED

The following table shows the datafill specific to TOPS Service Billing for table SCHED. Only those fields that apply directly to TOPS Service Billing are shown. For a description of the other fields, refer to the data schema section of this document.

Datafilling table SCHED

Field	Subfield or refinement	Entry	Explanation and action
TERMTYPE		SRV	Enter termination type SRV if it is datafilled as a service number in the SERVSCRN table.

Datafill example for table SCHED

The following example shows sample datafill for table SCHED.

MAP display example for table SCHED

```
SCHNAME LRS HRS TERMTYPE    SCHTYPE CIRP    CRP
-------------------------------------------------------
CANUSA  27  44  DOM         STD     1       2
LOCAL   349 350 LOC         MLT     0       0
SERVICE 351 355 SRV         STD     0       0
```

Datafilling table OGTKEY

The following table shows the datafill specific to TOPS Service Billing for table OGTKEY. Only those fields that apply directly to TOPS Service Billing are shown. For a description of the other fields, refer to the data schema section of this document.

Datafilling table OGTKEY

Field	Subfield or refinement	Entry	Explanation and action
BILLNUM		Y or N	The field BILLNUM in the OGTKEY table is a boolean. If the boolean is set to YES, the call is billed in the normal fashion to the calling customer. If the boolean is set to NO, NO AMA is set which results in the call not being billed.

Datafill example for table OGTKEY

The Outgoing Trunk Key (OGTKEY) Table allows the Operating Company to service numbers which are dialed by the calling customer and to numbers completed by an operator.

The following example shows sample datafill for table OGTKEY.

MAP display example for table OGTKEY

```
KEYNUM  CLDNO           SCRNTYPE    BILLNUM
-----------------------------------------------------
0       611             CUST        N
1       2390039         OPR         N
2       7058501111      OPR         N
3       6108500000      OPR         N
4       5198501111      OPR         Y
```

TOPS Service Billing (continued)

Datafilling table SERVNAME

Table Service Rating Name (SERVNAME) defines customer-definable rating names used in Table SERVSCRN and in Table SRVRS and is a control table. Service names are used to index Table SRVRS.

The following table shows the datafill specific to TOPS Service Billing for table SERVNAME. Only those fields that apply directly to TOPS Service Billing are shown. For a description of the other fields, refer to the data schema section of this document.

Datafilling table SERVNAME

Field	Subfield or refinement	Entry	Explanation and action
			Table is not changed.

Datafill example for table SERVNAME

The following example shows sample datafill for table SERVNAME.

MAP display example for table SERVNAME

```
VALUE   SYMBOL
--------------------------------------------------------
1       TOLLFREE
```

Datafilling table SERVSCRN

The following table shows the datafill specific to TOPS Service Billing for table SRVSCRN. Only those fields that apply directly to TOPS Service Billing are shown. For a description of the other fields, refer to the data schema section of this document.

Datafilling table SERVSCRN

Field	Subfield or refinement	Entry	Explanation and action
CLDNUM		numeric	Table Service Screen (SERVSCRN) lists the called number and the associated service name. For the first application of this table, tuple NPA-555-1212 TOLLFREE must be added. If all 555 numbers are the same service type, the line numbers are not entered in Table SERVSCRN. Only NPA-555 is entered for all NPAs. A number is a service number if it is in Table SERVSCRN. If a called number is datafilled as both a local call and a service call, the service designator is accepted.Called numbers with an NPA of 800 should not be entered into Table SERVSCRN. Table SERVSCRN is a standard part of the TOPS package. Default tuples are provided that treat all numbers with an NXX of 555 as a toll free call. Refer to the following figure for a list of default tuples.

Datafill example for table SERVSCRN

The following example shows sample datafill for table SERVSCRN.

MAP display example for table SERVSCRN

```
CALLED_NUMBER   SERVNAME
-------------------------------------------------------
202555  FOREIGNDA
203555  FOREIGNDA
204555  FOREIGNDA,
519555  FOREIGNDA
555     LOCALDA
602555  FOREIGNDA
603555  FOREIGNDA
604555  FOREIGNDA
919555  FOREIGNDA
```

TOPS Service Billing (continued)

Datafilling table SRVRS

Table Service Rating (SRVRS) rates the billing types. Table SRVRS has a 2-part key. The first part of the key is the tariff. Tariffs are defined in Table TARIFF. The second part of the key is the service name obtained from Table SERVSCRN. For each tariff and service name, there is an associated schedule and ratestep. Schedules and ratesteps exist in the rating system and specify charges for a call.

Table SRVRS is created using the Mass Table Control (MASSTC) facility of TOPS rating. Table SRVRS has a companion table called SRVRSI. These two tables allow two sets of rating data to be maintained: active and inactive. When the Operating Company changes the rating data, the changes are made to the inactive table. When the changes are complete and the Operating Company uses the data, the Operating Company switches the activity status of the rating tables.

The following table shows the datafill specific to TOPS Service Billing for table SRVRS. Only those fields that apply directly to TOPS Service Billing are shown. For a description of the other fields, refer to the data schema section of this document.

Datafilling table SRVRS

Field	Subfield or refinement	Entry	Explanation and action
TARIFF		see subfields	Key into table.
	TARIFF	alphanumeric	Enter tariff name from table TARIFF.
	SERVNAME	alphanumeric	Enter service name defined in tables SERVNAME and SERVSCRN.
SCHNAME		alphanumeric	Enter schedule name from table SCHED.
RATESTEP		0-999	Rate step.

Datafill example for table SERVRS

The following example shows sample datafill for table SERVRS.

MAP display example for table SERVRS

```
TARIFF   SERVNAME     SCHNAME RATESTEP
-------------------------------------------------------
TARIFF1 FOREIGNDA    SCHED1  1
TARIF1  LOCALDA      SCED1   2
```

Translation verification tools

TOPS Service Billing does not use translation verification tools.

SERVORD

TOPS Service Billing does not use SERVORD.

TOPS SPM Interworking

Ordering codes

Functional group ordering code: OSB00101

Functionality ordering code: not applicable

Release applicability

TOSP15 and up

TOPS15 introduced TOPS SPM Interworking.

Requirements

To operate, TOPS SPM Interworking requires the following:

- Functionality BAS Generic, BAS00003
- Table TOPSFTR paramter TOPS_ON_OFF_SWITCH = Y

Description

This feature provides support for subscriber access to TOPS using trunks that are hosted on a Spectrum Peripheral Module (SPM). This support includes the following trunk group types.

- TOPS
- IT
- ATC

For these trunk group types, both ISUP and MF signaling are supported, as they are applicable to the individual trunk group type.

This functionality consists of the feature as follows:

Feature number	Feature name
59021938	TOPS SPM Interworking

Operation

Add trunks as necessary for connection to the SPM. Refer to functionality GR317/GR394 ISUP to/from TOPS, OSEA0102, for details on datafill of ISUP trunks.

Translations table flow

The GR317/GR394 ISUP to/from TOPS translations tables are described in the following list:

- Table TRKGRP defines characteristics of trunk groups
- Table TRKSGRP defines trunk subgroups
- Table TRKMEM defines hardware characteristics of trunk members
- Table ISUPTRK defines ISUP trunks

The GR317/GR394 ISUP to/from TOPS translation process is shown in the flowchart that follows.

Table flow for GR317/GR394 ISUP to/from TOPS

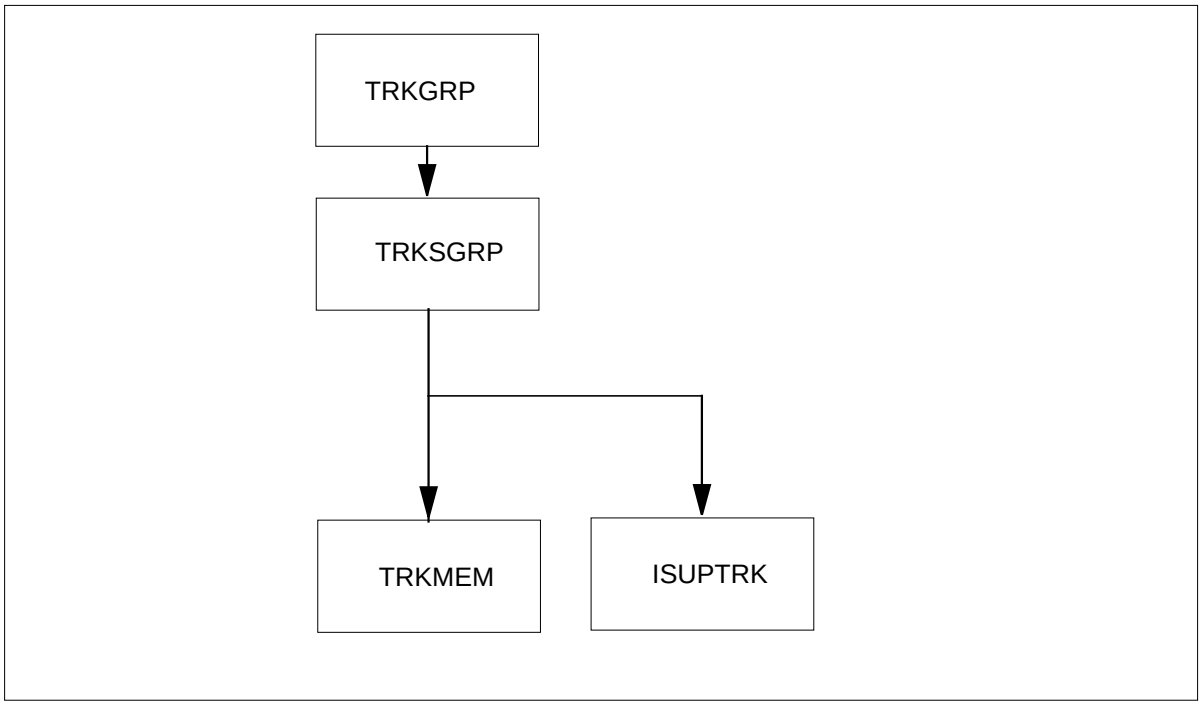

The following table lists the datafill content used in the flowchart.

Datafill example for GR317/GR394 ISUP to/from TOPS

Datafill table	Example data
TRKGRP	IT 0 EL0 NCRT 2W NIL MIDL 407 PEA NSCR 619 000 N N $
TRKSGRP	ISUPTRK1 0 DS1SIG C7UP IC N N UNEQ ACTIVEA Q764 THRH ISUP $ NIL

TOPS SPM Interworking (continued)

Datafill example for GR317/GR394 ISUP to/from TOPS

Datafill table	Example data
TRKMEM	ISUPTRK1 1 0 SPM 0 15 6
ISUPTRK	ISUPTRK1 NONE NLCA TOPSBC 1 ORIG NONE N Y 20 NONE

Limitations and restrictions

TOPS SPM Interworking has no limitations or restrictions.

Interactions

TOPS SPM Interworking does not interact with other functionalities.

Activation and deactivation by the user

TOPS SPM Interworking does not require activation or deactivation by the user.

Billing

TOPS SPM Interworking does not generate billing records or changes.

Station Message Detail Recording

TOPS SPM Interworking does not require Station Message Detail Recording.

Office parameters used by TOPS SPM Interworking

TOPS SPM Interworking does not generate office parameters.

Datafill sequence

The table that follows lists the tables that require datafill to put TOPS SPM Interworking into operation. You must enter data into the table in this order.

Datafill requirements for TOPS SPM Interworking

Table	Purpose of table
TRKGRP	Trunk group defines characteristics of trunks groups
TRKSGRP	Trunk subgroup defines characteristics of trunk subgroups.
TRKMEM	Trunk member defines hardware for trunk members
ISUPTRK	ISDN Signaling User Part trunk defines ISUP trunks.

Datafill related to TOPS SPM Interworking for tables TRKGRP, TRKSGRP, TRKMEM, and ISUPTRK

The table that follows provides the datafill related to TOPS SPM Interworking for tables TRKGRP, TRKSGRP, TRKMEM, and ISUPTRK. This table includes only those fields that apply directly to TOPS SPM Interworking.

Datafill related to tables TRKGRP, TRKSGRP, TRKMEM, and ISUPTRK

Field	Subfield	Entry	Explanation and action
			These tables are not changed. Add trunks as necessary for connection to the SPM.

Datafill examples for tables TRKGRP, TRKSGRP, TRKMEM, and ISUPTRK

The figures that follows show sample datafill for tables TRKGRP, TRKSGRP, TRKMEM, and ISUPTRK.

MAP example for table TRKGRP

```
GRPKEY
                                                                    GRPINFO
-------------------------------------------------------------------------
ISUPTRK1
                   IT 0 FL0 NCRT 2W NIL MIDL 407 PEA NSCR 619 000 N N $
ISUPTRK2
    ATC 0 EL0 NCRT 2W NIL MIDL EAP1 SCR3 619 C222 Y EAPLAN Y 0 COMB N $
TBELLIC1
    TOPS 0 TLD NCRT IC MIDL 619 619 PTOP NLCA NSCR Y SP COMBINED N Y 0
    0000 NONE BELL TOPSBC 16 10 10 Y N OFFHK N N $
```

MAP example for table TRKSGRP

```
GRPKEY      CARDCODE                                              SGRPVAR
-------------------------------------------------------------------------
ISUPTRK1 0  DS1SIG     C7UP IC N N UNEQ ACTIVEA Q764 THRH ISUP $ NIL CIC
ISUPTRK2 0  DS1SIG     C7UP IC N N UNEQ ACTIVEA Q764 THRH ISUP $ NIL CIC
TBELLIC1 0  2X82AA     STD IC MF WK IN 30 30 MW MW N N Y M UNEQ $
```

TOPS SPM Interworking (end)

MAP display example for table TRKSGRP

```
GRPKEY      CARDCODE                                                SGRPVAR
-------------------------------------------------------------------------
ISUPTRK1 0  DS1SIG     C7UP IC N N UNEQ ACTIVEA Q764 THRH ISUP $ NIL
ISUPTRK2 0  DS1SIG     C7UP IC N N UNEQ ACTIVEA Q764 THRH ISUP $ NIL
```

MAP example for table TRKMEM

```
CLLI      EXTRKNM  SGRP        MEMVAR
-------------------------------------------------
ISUPTRK1  1        0           SPM  0  15  6
ISUPTRK2  2        0           SPM  0  15  7
TBELLIC1  1        0           SPM  0  16  4
```

MAP example for table ISUPTRK

```
  GRPKEY    CONNTYPE  LCANAME      BILLCD  CALLSRC   ANI2CLI     RLT
   SNTPDRST   DNLKUP  DISPLAY   ININTWRK
-----------------------------------------------------------------------
ISUPTRK1        NONE     NLCA   TOPSBC  0     ORIG         Y    NONE
          N        N        0       NONE
ISUPTRK2        NONE     LCA1   TOPSBC  1     ORIG         Y    NONE
          N        N        0       NONE
```

Translation verification tools

TOPS SPM Interworking does not use translation verification tools.

SERVORD

TOPS SPM Interworking does not use the Service Order System (SERVORD).

TOPS Two Terminal DA/Intercept

Ordering codes

Functional group ordering code: OSB00101

Functionality ordering code: does not apply

Release applicability

TOPS15 and later versions

Requirements

To operate, TOPS Two Terminal DA/Intercept has the following requirements:

- BAS Generic, BAS00003
- Directory Assistance Base, OSDA0101
- Table TOPSFTR parameter TOPS_ON_OFF_SWITCH = Y

Description

The following features provide this functionality:

Feature number	Feature name
AF2018	Two Terminal DA/Intercept
BR20811	TOPSPOS entry rules for MPX
BR33644	TOPS: Override room number checks for MPX/AOSS (BCS35)
59006865	MD Code Removal and ReEngineering (TOPS12)

Note: The TOP BP is equivalent to TOPS MPX. When BP occurs, substitute MPX for BP.

The TOPS Two Terminal DA/Intercept contains the following three features:

AF2018 - Two Terminal DA/Intercept

This package implements the TOPS MPX (Multipurpose Extension) system. This package contains all of the necessary guidelines for entry of data in the TOPS MPX system.

BR20811 - TOPSPOS datafill rules for MPX

The PRS BR20811 places limits on table TOPSPOS for TOPS MPX. See the “Datafill Procedure" section for more details.

TOPS Two Terminal DA/Intercept (continued)

BR33644 - TOPS: Override room number checks for MPX/AOSS

This PRSDOC allows a billable Directory Assistance (DA) call to release to an Audio Response Unit (ARU) trunk. The DA call originates from a hotel line. The call releases from a TOPS MPX/AOSS position without the entry of a room number. This change applies to hotel DA calls received on TOPS MPX/AOSS positions.

Operation

The TOPS Two Terminal DA/Intercept performs as follows.

AF2018 - Two Terminal DA/Intercept

Feature AF2018 provides an interface between TOPS software and a basic DA/INT services terminal. The TOPS software supports DA and Intercept call types. This document uses a generic term for basic DA/INT services terminal. The name is TOPS BP, for TOPS Basic Position.

An example of a basic terminal is the Northern Telecom Auxiliary Operator Services System (AOSS) terminal. Bell Canada uses the AOSS terminal. The AOSS supports basic call control functions. These functions include the following:

- the entry of calling digits on ONI or ANIF calls
- the connection/release of the forward party
- the entry of the requested number
- the transfer to another operator for a different language
- a charge/no-charge
- Directory Assistance
- a monitor capability

This feature allows the use of TOPS software with this type of terminal.

The man machine interface (MMI) TOPS BP terminal is like the MMI of an AOSS terminal. The TOPS software drives the terminal. The AOSS software does not drive the terminal. The functionality that the terminal provides a subset of TOPS MP functionality. One method to define TOPS BP is as a TOPS MP terminal with a smaller screen and fewer keys.

The system requires the following features to provide Two Terminal Directory Assistance:

- A DMS 200 switch with TOPS MP software
- Directory Assistance/Intercept software package

TOPS Two Terminal DA/Intercept (continued)

Background

An operator that provides Directory Assistance (DA)/Intercept (INT) services must be able to perform two sets of functions. Many DA/INT centers currently use two terminals for each operator. One terminal is for call control/billing. One terminal lists searches. The terminal that provides call control and basic billing capabilities is a basic services terminal. The terminal that interfaces the listing database is a Directory Assistance Services (DAS) terminal. The interface allows searches on different information for a telephone listing.

This feature provides an interface to a DMS-200 TOPS Queue Management System (QMS) for a new type of basic services terminal. Current DAS terminals can work with the terminal. The basic services terminal is the TOPS BP, or TOPS Basic Position. This feature provides the software support for the TOPS BP.

Northern Telecom provides DA/INT support through the TOPS MP product. The TOPS MP product combines the DAS and the basic services terminal in a single piece of equipment. The TOPS MP provides an expanded set of capabilities and improved ergonomics over the two terminal configuration. Software support with this feature is available for TOPS BP in offices that contain only TOPS BP terminals. Software support with this feature is also available in offices that contain a mix of TOPS BP and TOPS MP terminals. An operating company with TOPS BP can purchase the DMS-200 TOPS ACD at a minimal short-term cost for each position. An operating company with TOPS BP can also use current DAS terminals. The operating company can upgrade to more powerful TOPS MP terminals as required.

The differences between TOPS BP and TOPS MP configurations appear in the following diagrams. The relationship between TOPS BP and other components of the system appears in the following figure. The relationship between TOPS MP and other components of the system appears in the next figure.

Note: The figure combines the two operator terminals.

TOPS Two Terminal DA/Intercept (continued)

System Configuration for Two Terminal DAx

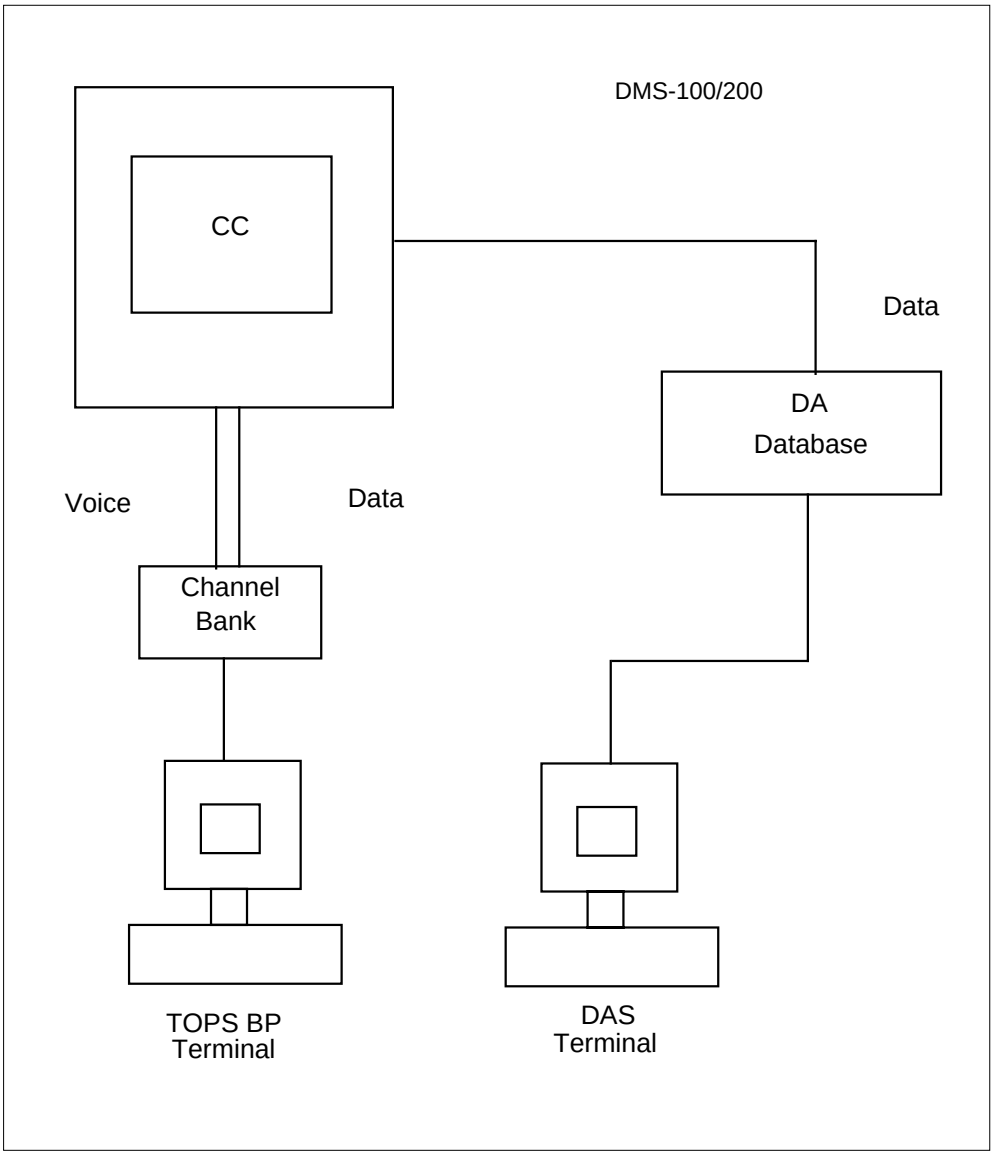

TOPS Two Terminal DA/Intercept (continued)

System configuration for TOPS-MP DA

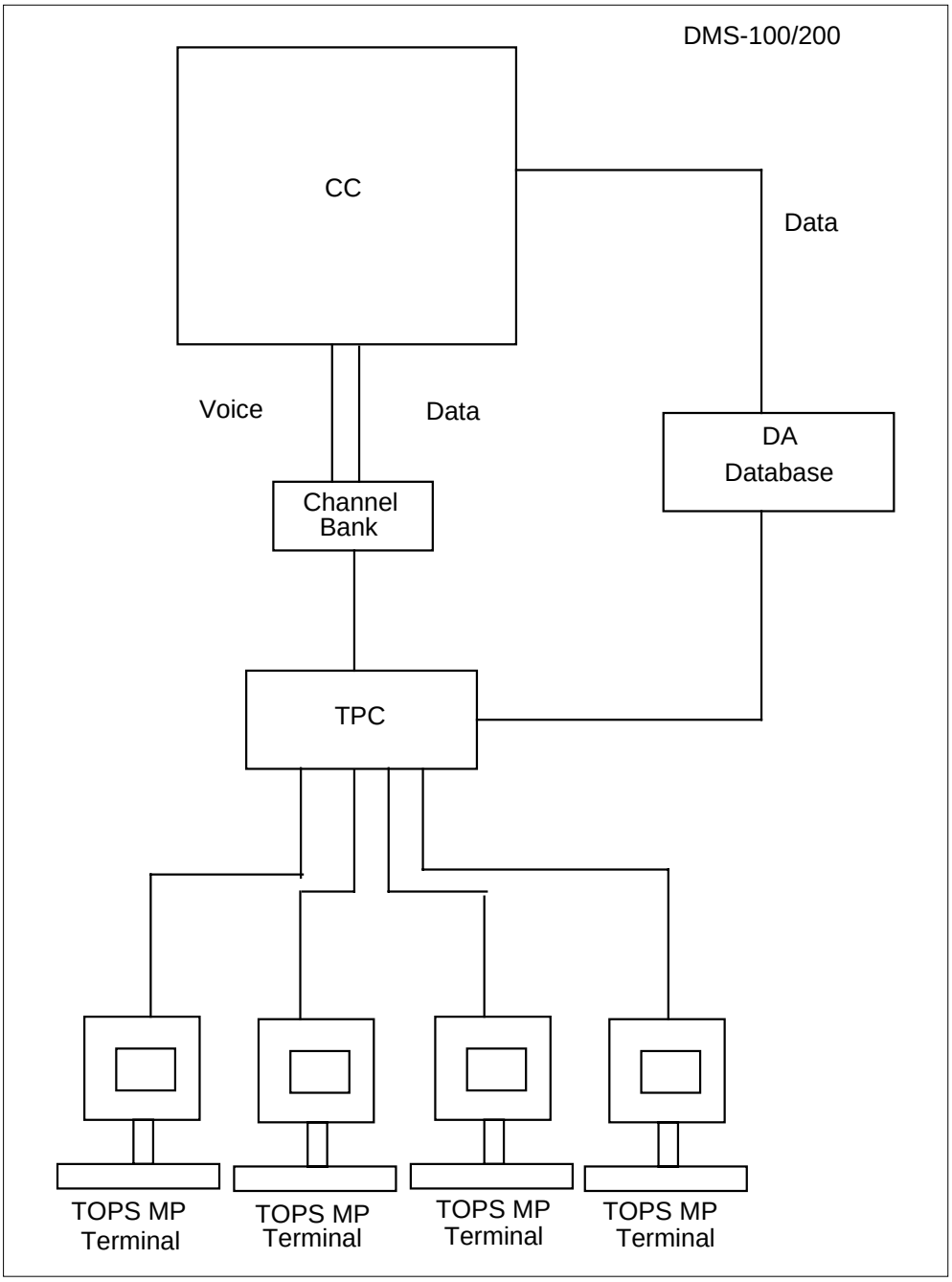

The screen can switch from toll and assist displays to DAS search displays with TOPS MP. The keyboard contains DA search keys and toll and assist keys.

TOPS Two Terminal DA/Intercept (continued)

In a two terminal configuration, call control and billing use the TOPS BP terminal. The terminal also provides a subset of TOPS MP functionality. The DAS terminal provides search screens and key functions.

Feature Capabilities

Feature AF2018 is the Two Terminal DA/Intercept. Feature AF2018 allows a telephone company to use the DMS-200 TOPS ACD DA/INT features in a two terminal configuration. In this configuration, each operator has a DAS terminal from the DA/INT and a new TOPS BP basic services terminal.

This feature provides for a two terminal configuration. This document describes how the operator coordinates the use of these terminals to provide service. The DAS terminal receives most of the attention of the operator. Each search of the listing services database must occur through the DAS terminal. The specified search capabilities and operational details of the DAS terminal can differ for each DA/INT vendor. This document does not discuss the specified service database and operational details. The discussion of the DAS terminal applies to a system level of detail. The operator uses the DAS terminal to perform a search. This event occurs as opposed to the operator presses key X on the DAS terminal to perform a search. The TOPS BP can work with a number of different types of DAS terminals. The number of DAS protocols that the TOPS DA software contains determines the number of terminals with which the TOPS BP works. The key X can be different because of this condition. The DAS terminal in use with TOPS BP determines the difference.

In this document, full descriptions of the TOPS BP terminal at the lower, operational level must appear. The function that each set of keying performs and the meanings of the different screen displays are an important concern of this document.

This feature provides the integration of the TOPS BP terminal and the DMS-200 TOPS ACD. This feature extends integration beyond the operational capabilities that the Operator Positions can observe. The DMS-200 ACD must detect the characteristics of the position and of the call traffic to route to the position. The DMS-200 must perform this action before the operator can receive a call at the TOPS BP terminal.

Two Terminal Definition

The name two terminal describes a configuration that provides DA/Intercept service from the point of view of the DMS. The vendor of the TOPS BP terminal can combine the functionality of the TOPS BP and the DAS terminal in one terminal. The terminal vendor makes this decision. The decision does not effect the functionality of this feature. Future references to two terminal use this definition.

TOPS Two Terminal DA/Intercept (continued)

AOSS Restriction

Communication between the DMS and the TOPS BP terminal is like the communication between the DMS and the AOSS terminal. This feature allows the TOPS BP terminal to interact with TOPS software. This feature does not provide the capability for AOSS to use TOPS software. Full AOSS functionality can occur only in an AOSS environment. A future BCS provides full AOSS functionality in a TOPS environment.

How calls get to TOPS BP positions

Before release TOPS12, Automatic Call Distribuition (ACD) and the queue management system (QMS) routed calls to TOPS BP. In release TOPS12, ACD is manufacturer discontinued (MD) so QMS is the only choice for routing calls. Refer to functionality QMS Host/Remote Queueing, OSB00101, for information.

Classification of Positions (Table TOPSPOS)

Table TOPSPOS allows an operating company to define TOPS positions to a DMS.

Classification of Operators (Table OPRDAT)

Table OPRDAT defines the operator IDs that are correct for an office.

MAP example for table OPRDAT

```
OPRNUM              OPRDATA
_____________________________________________________

100                 IC
101                 OPR
111                 OPR
112                 ASST
200                 IC
201                 OPR
211                 OPR
212                 ASST
```

Functional Differences: TOPS BP vs. TOPS MP. A limit to the functionality of TOPS BP occurs when compared to functionality of TOPS MP. The TOPS BP allows only STA PD or No Charge as TOPS BP billing options. The TOPS MP allows the following billing options:

- third number
- calling card
- collect billing

TOPS Two Terminal DA/Intercept (continued)

- coin
- hotel billing

The TOPS MP can function as a DAS terminal. The TOPS MP has state-of-the-art ergonomics in the position and the furniture that accompanies the position. The TOPS MP provides a larger screen. Many single letters on TOPS BP are a full word on TOPS MP.

Forward Connection. The TOPS MP positions that provide DA service cannot make forward connections. The TOPS BP allows the operator to enter a one or two digit OGT code. The TOPS BP follows the AOSS functionality. The TOPS BP also allows a seven or ten digit forward number to place a call. Many offices with AOSS allow forward numbers only for specified emergency agencies.

Functional Differences: TOPS BP vs. AOSS

The functional differences between TOPS BP and AOSS are as follows.

Bellcore AMA. The AOSS software can produce NT AMA only. The software cannot produce Bellcore AMA. The TOPS BP can produce Bellcore and NT AMA, like TOPS MP, because TOPS BP uses TOPS software.

Automatic DA Call Completion. The TOPS BP can provide the TOPS software feature called Automatic DA Call Completion (ADACC). This condition occurs because TOPS BP uses TOPS software.

A TOPS BP office can only provide ADACC if the all following conditions occur:

- the office uses Bellcore AMA
- the system bills the call to receive ADACC as Station Paid
- the office has the necessary facilities like outgoing trunks

Floating calls to another DA center. A TOPS BP operator can use OGT codes to float a call to another DA center.

TOPS BP in an OC Environment. The Operator Centralization (OC) works with TOPS BP because TOPS BP uses TOPS software. In an OC environment, specified TOPS switches designated as REMOTEs do not contain operators. The exchange of data messages occurs between the remote and the HOST switch, which contains operators. The exchange occurs when a call that requires operator assistance comes to a remote switch. The system establishes data and voice connections between the remote and the host. The connections

allow the subscriber to reach an operator. An operator on a TOPS BP can handle calls from a remote switch and the host because TOPS BP uses TOPS software.

Three-Port Conference Circuits: Provisioning. In AOSS, three ports are not allocated for a position until the three ports are a requirement. The allocation of three port position occurs for a call to DA or a call to a forward party. The TOPS allocates a three-port conference circuit for each call. An office that converts from AOSS to TOPS BP requires more three-ports.

Book Numbers and Listing Status. The AOSS can display the book numbers that correspond to the telephone directories a subscriber owns. The book numbers appear on the terminal to assist the operator to determine if call is chargeable. The TOPS BP does not support the appearance of book numbers.

The calling number indexes table BOOKNUM on the AOSS system. Table BOOKNUM specifies which telephone book numbers correspond to that number. This condition gives the numbers of the telephone books the subscriber has at home. The book number corresponds to the telephone book that lists the requested number. The book number appears with that listing in the specified DAS terminal in use with AOSS. With this system, the operator must look at the book numbers that appear on the AOSS screen, the books the subscriber owns. The operator must also look at the book numbers on the DAS that lists the books. The operator uses the AOSS screen and the DAS to determine if a match is present. If the listing is from a book the subscriber has at home, the operator charges the subscriber for that DA request. The charge occurs because the subscriber can look up the number at home. If the listing comes from a book the subscriber does not have, the subscriber is not charged. The subscriber cannot identify the number in the books at home.

The current position of TOPS is that this type of book number match occurs more easily if the system programs the match. If the operator must compare two sets of numbers to decide to press the No Charge key, the operator is not efficient. If the calling and requested numbers are on the billing record, the downtown AMA processing can perform this type of matching.

Assistance System. The TOPS BP follows the TOPS MP policy of Assistance. General, Assistance and In-Charge are three separate types of positions. The AOSS reports these three entities as part of a set of operator capabilities that include the following:

- General
- Assistance
- In-Charge

TOPS Two Terminal DA/Intercept (continued)

- monitor
- transfer 1
- transfer 2

A specified AOSS position can have groups of these capabilities. Operators can have one of the following:

- Assistance and In-Charge capabilities
- Assistance and General capabilities
- Assistance capabilities without monitoring

An operator with a combined capability capability profile toggles between different states with the Busy key. A combined Assistance and General operator, for example uses the Busy key to toggle the following states:

- no calls allowed
- Assistance calls only
- general and Assistance calls mixed

The TOPS in general, and TOPS BP, do not support this type of assistance system. Only two busy states are in TOPS BP. The system blocks or does not block the arrival of calls at position. Assistance operators never take general or transfer calls. Assistance and In-Charge operators always have monitor capability. Other types of operators do not have monitor capability. The only part of the AOSS-style state toggling that the system supports is the In-Charge position toggle. The In-Charge position can toggle between the following states:

- acceptance of no assistance requests
- acceptance of directed set calls only
- entry of the BUSY key to allow both directed and general set calls

TOPS BP Force Management

The TOPS Force Management depends on operator groups. Groups are collections of a number of General Positions, between one and six Assistance Positions, and a single In-Charge position. Force management statistics accumulate for each operator and for each group. Monitoring is only acceptable in a group. Paging and assistance requests can occur across groups if the TOPS_CROSS_TEAM_ROUTING office parameter is set. For example, a group 2 In-Charge operator cannot monitor a group 1 operator. If the TOPS_CROSS_TEAM_ROUTING office parameter is Y, a group 2 SA/IC operator can page a group 1 general operator. A group 3 general operator can request assistance from a group 5 SA/IC operator. In an office that contains

TOPS BP and TOPS MP positions, the assignment of all TOPS BP positions to teams that have only other TOPS BP positions occurred. The TOPS MPs and TOPS BPs must not be in the same group. The assignment of a position to a specified group in table TOPSPOS occurred. When TOPS BP positions are separate in the same groups, force management statistics and assistance functions are limited to TOPS BP positions.

The AOSS and TOPS BP functionality differs on the issue of monitoring. For AOSS, monitoring is a capability. The profile of the operator determines if the operator can monitor other operators. Any operator, General, IC or SA, can monitor another General operator with AOSS. For TOPS BP, the ability to monitor associates with the position type. If a position is an IC or SA, the operators that use that position can monitor General operators. General operators cannot monitor.

The FMCRT is a TOPS position entered with data in table TOPSDEV. The FMCRT has another limit. Statistics appear in the FMCRT for each group office wide. Use of a TOPS BP position cannot occur as an FMCRT because a limit of the screen size of the TOPS BP occurs. Statistics can appear with a TOPS 04 or TOPS MP position as an FMCRT. The statistics can appear office wide if one or more of the groups contain TOPS BP positions. This limit also appears in “TOPS BP device restrictions."

TOPS BP device restrictions

The TOPS devices are normally teletypewriters (TTYs) that obtain statistics that concern operator activity. The TOPS devices also can affect the queue in an office. The TOPS devices can manage TOPS BP positions with the same method that TOPS SP and TOPS BP positions use. The management can occur because the TOPS BP is an operator position with limited call handling abilities.

Another limit applies to the FMCRT. Statistics for each team for the whole office appears in the FMCRT. A TOPS BP position cannot be an FMCRT because a limit of the screen size of the TOPS BP occurs. Statistics can appear with a TOPS 04 or TOPS MP position as an FMCRT. The statistics can appear office wide in which a minimum of one teamscan contain TOPOS BP positions. This restriction also appears in TOPS BP Force Management.

BR202811 - TOPSPOS datafill rules for MPX

For TOPS MPX, all virtual position controllers (VPCs) must be assigned TPCPOSNO = 0. Each VPC also must have a position number that is a multiple of 4 (0, 4, 8, etc.) assigned through DEFPOS in the MPX.

The assignment of two Type 1 MPX positions with DA search links for each token ring to different VPCs for reliability occurs. The assignment of two

TOPS Two Terminal DA/Intercept (continued)

positions to the save group of 4 positions for the same VPC in table TOPSPOS must not occur.

BR33644 - TOPS: Override room number checks for MPX/AOSS

This PRSDOC allows a billable DA call to release to an Audio Response Unit (ARU) trunk. The call releases from a TOPS MPX/AOSS position without the entry of a room number. The DA call started from a hotel line. This change only applies to hotel DA calls received on TOPS MPX/AOSS positions.

Before this PRSDOC, the operator voice quoted the desired number. The voice quote occurred when an MPX/AOSS position receives a billable DA hotel call on. This condition occurs because the AOSS protocol does not support the entry of the room number. The AOSS protocol affected the Average Work Time of operators.

The DA calls include calls that receive Queue Management System (QMS) service. The QMS service has a base service type of DASERV. Datafill for this service is in table TQMSSERV for offices with QMS.

A new parameter is in table VROPT. The parameter is DA_BP_HOTEL_ ROOM_REQUIRED. If the parameter is Y, the processing of billable hotel DA calls does not change. The default is Y.

If the parameter DA_BP_HOTEL_ROOM_REQUIRED is Y, billable DA hotel calls on TOPS MPX/AOSS positions cannot release to an ARU. The DMS requires a room number to satisfy AMA for these billable calls. The operator cannot satisfy this requirement because the MPX/AOSS terminal does not support the entry of the room number. The result is the operator must voice quote the number to the hotel subscriber.

If the parameter DA_BP_HOTEL_ROOM_REQUIRED is N, billable DA hotel calls on TOPS MPX/AOSS positions can release to an ARU. The release occurs without the entry of a room number. This PRSDOC implemented a change in the billing checks. Billing checks bypass the room number check for these calls. The operator can enter the correct line designator. The entry can occur after the operator performs the DA search and the subscriber routes to an ARU trunk. At the same point in time the call automatically releases from the position.

If the new parameter is N, MPX/AOSS operators do not voice quote the number to the hotel subscriber. This condition reduces the Average Work Time (AWT) for MPX/AOSS operators, when the operators handle billable hotel DA calls.

Translations table flow

The TOPS Two Terminal DA/Intercept does not affect the translation process.

Limits

The following limits apply to TOPS Two Terminal DA/Intercept:

- TOPS BP terminals cannot provide TA capability. An attempt to enter data in a TOPS BP terminal in table TOPSPOS with a service type of TASERV produces an error message. This error message is TA CAPABILITY IS ONLY PROVIDED FOR MP AND SP POSITIONS.
- This feature alters the structure of table TOPSPOS to allow different types of TOPS positions. The data path, position type, and protocol determine the different types. The only positions that can be entered as a result of this feature have the following characteristics:
  - — Datapath = DMODEM or TMS
  - — Position Type = SP (DMODEM only), MP (DMODEM or TMS), or BP (DMODEM or TMS)
  - — Protocol = ASCII
- A limit that involves the FMCRT is a TOPS position entered in table TOPSDEV. Statistics for each office group appears in the FMCRRT. A TOPS BP position cannot be an FMCRT because a limit of the screen size of the TOPS BP occurs. You can use a TOPS-IV or TOPS MP position as an FMCRT. Statistics for each office in which one or more of the groups can contain TOPS BP positions can appear.
- The TOPS devices are normally TTYs that obtain statistics that concern operator activity. The TOPS devices can also affect the queue in an office. The TOPS BP is an operator position with limited call handling abilities. The TOPS devices can manage TOPS BP positions in the same method as TOPS SP and TOPS MP positions.
- One limit that the smaller screen size causes applies. Force administration and team administration (FADS and TADS) devices can send messages to operators for each group or office. These messages appear on the screens of the operators, and are broadcast messages. The limited size of the TOPS BP screen prevents any available area to reserve only for broadcast messages to be present. Broadcast messages do not appear on the TOPS BP screen.
- A limit of the functionality of TOPS BP occurs when compared to functionality of TOPS MP. The TOPS BP allows only STA PD or No Charge as the billing options. The TOPS MP allows third number, calling card, collect billing, coin, and hotel billing. The TOPS MP can function as a DAS terminal. The TOPS MP has an on-line Operator Reference

TOPS Two Terminal DA/Intercept (continued)

Database. The TOPS MP has state-of-the-art ergonomics in the position and with the furniture that accompanies the position. The TOPS MP provides a larger screen. Many single letters on TOPS BP are a full word on TOPS MP.

- The TOPS MP positions that provide DA service cannot make forward connections. The TOPS BP that follow the AOSS functionality allows the operator to place a call. The operator enters a one or two digit OGT code or a seven or ten digit forward number to place the call. Many offices with AOSS allow forward numbers only for specified emergency agencies.
- The TOPS BP is like AOSS in many ways. Specified limits apply in areas like AMA and Force Management. These changes appear in previous sections.

Interactions

The TOPS Two Terminal DA/Intercept interacts with TOPS MP software and the optional directory assistance/intercept software package.

Activation/deactivation by the end user

The TOPS Two Terminal DA/Intercept does not require activation or deactivation by the end user.

Billing

The AMA records that this feature produces support TOPS Bellcore AMA and EBAF Phase 1 or 2.

Station Message Detail Recording

The TOPS Two Terminal DA/Intercept does not affect Station Message Detail Recording.

Datafilling office parameters

The TOPS Two Terminal DA/Intercept does not affect office parameters.

TOPS Two Terminal DA/Intercept (continued)

Datafill sequence

The tables that require datafill to implement TOPS Two Terminal DA/Intercept appear in the following table. The tables appear in the correct entry order.

Note: To support the TOPS BP terminal and the AOSS protocol, the TOPS Position (TOPSPOS) and TOPS Device (TOPSDEV) tables require changes.

Datafill requirements for TOPS Two Terminal DA/Intercept

Table	Purpose of table
CLLI	Common Language Location Identifier Table. This table identifies the following: • the far end of each announcement • tone • trunk group • test trunk • national milliwatt test lines • service circuit
TOPSPOS	TOPS Position. This table defines TOPS positions to the switch. This table specifies the services that a position can provide.
TOPSDEV	TOPS Device. The devices that require one trunk circuit for data and identify the trunk circuit locations appear in this table.
TOPS	Traffic Operator Position System. This table determines the type of service that a call requires with translations. The call origination type determines the requirements of a call.
OPRDAT	TOPS Operator Data. The assigned operator numbers appear in this table. Only operators with a number in this table can log in to a TOPS position.
VROPT	Voice Response Options. This table contains parameters that external voice response units require. ***Note:*** Required by BR33644 - TOPS: Override room number checks for MPX/AOSS.

Datafilling table CLLI

Datafill for TOPS Two Terminal DA/Intercept for table CLLI appears in the following table. The fields that apply to TOPS Two Terminal DA/Intercept

TOPS Two Terminal DA/Intercept (continued)

appear in this table. See the data schema section of this document for a description of the other fields.

Datafilling table CLLI

Field	Subfield or refinement	Entry	Explanation and action
			Datafill dedicated and combined DA trunks.

Datafilling table TOPSPOS

Before this feature, the CNTRLR area in TOPSPOS defined the characteristics of data transmission to the terminal. With this feature, the CNTRLR area has a different definition. The area is DATAPATH. The area contains two refinements.

Datafill for TOPS Two Terminal DA/Intercept for table TOPSPOS appears in the following table. The fields that apply to TOPS Two Terminal DA/Intercept appear in this table. See the data schema section of this document for a description of the other fields.

Datafilling table TOPSPOS

Field	Subfield or refinement	Entry	Explanation and action
DATAPATH		see subfields	This field contains subfields DATATYPE and refinements.
	DATATYPE	DMODEM or TMS	Enter data in DMODEM with data when a digital modem transports data to the terminal. Enter data in the TMS when the terminal subtends a TMS.
If DATATYPE = DMODEM, datafill in the following fields:			
POSTYPE		SP, MP or BP	The type of position
PROTOCOL		ASCII or OPP	The format in use to transmit data to terminal
DATA_CIRCUIT		see subfields	The data circuit to the terminal. This field contains subfield PMTYPE and refinements. See the data schema.
DATA_PADGRP		alphanumeric	The pad in use on the data circuit

Datafilling table TOPSPOS

Field	Subfield or refinement	Entry	Explanation and action
XMISSION		BELL108. BELL202, BELL212H or BELL212L	The transmission or baud rate in use over the digital modem.
If DATATYPE = TMS, enter data in the following fields:			
POSTYPE		SP, MP or BP	The type of position
PROTOCOL		ASCII or OPP	The format in use to transmit data to terminal
TPCNO		0-254	TOPS position controller number
TPCPOSNO		0-95	High speed line interface card number

Datafill example for table TOPSPOS

Datafill for table TOPSPOS appears in the following example.

TOPS Two Terminal DA/Intercept (continued)

MAP example for table TOPSPOS

```
POSNO            VCCKT  VCPDGRP  CARDCODE
     DATAPATH                     POSAREA
_____________________________________________________________
  100
      TM8   0 24     NPDGP    2X72AA
      DMODEM    SP       ASCII  TM8    0 25   NPDGP  BELL108
                              OPR  1  5
  101
      TM8   0 26     NPDGP    2X72AA
      DMODEM    SP       ASCII  TM8    0 27   NPDGP  BELL108
                              ASST  1  6
  111
      TM8   0 28     NPDGP    2X72AA
      DMODEM    SP       ASCII  TM8    0 29   NPDGP  BELL108
                              IC  1  TASERV$
  200
      TMS  0 1 1     NPDGP    DS1SIG
      TMS       MP     ASCII  3  0
                              OPR  2  5
  201
      TMS  0 1 4     NPDGP    DS1SIG
      TMS       MP     ASCII  3  1
                              ASST  2  ALL
  211
      DTC  0 3 13    NPDGP    DS1SIG
      DMODEM    MP     ASCII  DTC   0 3 14  NPDGP  BELL202
                              IC  2  ALL
  212
      DTC  0 3 15    NPDGP    DS1SIG
      DMODEM    MP     ASCII  DTC  0 3 16   NPDGP  BELL202
                              OPR  2  6
  300
      TM8   2  4     NPDGP    2X88AA
      DMODEM    BP     ASCII  TM8    2  5   NPDGP  BELL108
                              OPR  3  6
  301
      TM8   8 20     NPDGP    2X88AA
      DMODEM    BP     ASCII  TM8    8 21   NPDGP  BELL108
                              ASST  3  DASERV INTCSERV $

 400
       TMS  0 2 1     NPDGP    DS1SIG
       TMS       BP     ASCII  2 0
                              IC 4 DASERV INTCSERV $
 401
       TMS  0 2 3     NPDGP    DS1SIG
       TMS       BP     ASCII  2 1
                              OPR 4 8
```

Table TOPSPOS Restrictions

Only the following groups of datapath, position type, and protocol entries can occur in table TOPSPOS with this feature alone:

- Datapath = DMODEM, Position Type = SP, Protocol = ASCII
- Datapath = DMODEM, Position Type = MP, Protocol = ASCII
- Datapath = TMS, Position Type = MP, Protocol = ASCII
- Datapath = DMODEM, Position Type = BP, Protocol = ASCII

The BP indicates the position is a TOPS BP. The BP provides the TOPS BP functionality that appears in this document.

With feature AF2395 - Dedicated DA Subtending TMS, in BCS30, the following additional group is permitted:

- Datapath = TMS, Position Type = BP, Protocol = ASCII

Positions 400 and 401 on the preceding page indicate possible datafill if Feature AF2395 is present.

To retain AOSS terminals for use as TOPS BP positions, one of the two features mentioned above must be present.

BR202811 - TOPSPOS datafill rules for MPX

For TOPS MPX, the assignment of all VPCs (virtual position controllers) must be TPCPOSNO = 0. Each VPC must also have a position number that is a multiple of 4 (0, 4, 8, etc.) assigned via DEFPOS in the MPX.

The assignment of two Type 1 MPX positions (with DA search links) for each token ring to different VPCs for reliability occurs. This assignment must not occur to the save the group of 4 positions associated with the same VPC in table TOPSPOS.

Datafilling table TOPSDEV

Table TOPSDEV contains information for all TOPS devices. This feature affects only the Force Management CRT (FMCRT) device. Before this feature, the device refinement for the FMCRT also contained a CNTRLR refinement. This refinement changes to DATAPATH with this feature. This refinement contains two refinements.

Datafill for TOPS Two Terminal DA/Intercept for table TOPSDEV appears in the following table. The fields that apply to TOPS Two Terminal DA/Intercept

TOPS Two Terminal DA/Intercept (continued)

appear in this table. See the data schema section of this document for a description of the other fields.

Datafilling table TOPSDEV

Field	Subfield or refinement	Entry	Explanation and action
DATAPATH		DMODEM or TMS	Datapath. You must enter data in DMODEM when a digital modem transports data to the FMCRT. You must enter data in TMS when the FMCRT subtends a TMS.
If DATAPATH = DMODEM, enter data in the following fields:			
POSTYPE		SP, MP or BP	The type of position
PROTOCOL		ASCII	The format in use to transmit data to the terminal
MEMVAR		see subfields	The variable data for members. This field contains subfield PMTYPE and refinements. See the data schema.
CARDCODE		2X72AA or DS1SIG	Enter the card code for the TOPS position circuit. If the entry in subfield PMTYPE is TM8, enter 2X72AA (analog). For all entries in subfield PMTYPE except TM8, enter DS1SIG (digital).
XMISSION		BELL108, BELL202, BELL212H or BELL212L	Transmission or baud rate in use over the digital modem
If DATAPATH = TMS, enter data in the following fields:			
POSTYPE		SP, MP or BP	The type of position
PROTOCOL		ASCII	The format cause to transmit data to the terminal
TPCNO		0-254	TOPS position controller number
TPCPOSNO		0-3	High speed line interface card number

Datafill example for table TOPSDEV

Datafill for table TOPSDEV appears in the following example.

MAP example for table TOPSDEV

```
DEVNO                              DEVTYPE
_____________________________________________________________

21   FMCRT  DMODEM  SP  ASCII  DTC 0 3 11  DS1SIG BELL108
```

Datafilling table OPRDAT

Datafill for TOPS Two Terminal DA/Intercept for table OPRDAT appears in the following table. The fields that apply to TOPS Two Terminal DA/Intercept appear in this table. See the data schema section of this document for a description of the other fields.

Datafilling table OPRDAT

Field	Subfield or refinement	Entry	Explanation and action
			Assign operators as necessary.

Datafill example for table OPRDAT

Datafill for table OPRDAT appears in the following example.

MAP example for table OPRDAT

```
OPRNUM              OPRDATA
_____________________________________________

100                 IC
101                 OPR
111                 OPR
112                 ASST
200                 IC
201                 OPR
211                 OPR
212                 ASST
```

Datafilling table VROPT

Datafill for TOPS Two Terminal DA/Intercept for table VROPT appears in the following table. The fields that apply to TOPS Two Terminal DA/Intercept

TOPS Two Terminal DA/Intercept (continued)

appear. See the data schema section of this document for a description of the other fields.

Datafilling table VROPT

Field	Subfield or refinement	Entry	Explanation and action
PARM		DA_BP_HOTEL_ROOM_REQUIRED	A new parameter is introduced in table VROPT. The name of the parameter is DA_BP_HOTEL_ ROOM_REQUIRED. If the parameter is Y, the processing of billable hotel DA calls does not change. The position type does not affect this conditon. The value is Y. If the parameter DA_BP_HOTEL_ROOM_R EQUIRED is Y, billable DA hotel calls on TOPS MPX/AOSS positions cannot release to an ARU. If the parameter DA_BP_HOTEL_ROOM_R EQUIRED is N, billable DA hotel calls received on TOPS MPX/AOSS positions can release to an ARU. The release can occur without the entry of a room number.

Datafill example for table VROPT

Datafill for table VROPT appears in the following example.

MAP example for table VROPT

```
PARM                                                    VALUE
_____________________________________________________________

DA_BP_HOTEL_ROOM_REQUIRED                                 Y
```

Tools for verifying translations

The TOPS Two Terminal DA/Intercept does not use tools for verifying translations.

SERVORD

The TOPS Two Terminal DA/Intercept does not use SERVORD.

Year 2000

Ordering codes

Functional group ordering code: OSB00101

Functionality ordering code: not applicable

Release applicability

TOPS07 and up

Year 2000 was introduced in TOPS07.

Prerequisites

To operate, Year 2000 requires the following:

- Functionality BAS Generic, BAS00003
- Table TOPSFTR paramter TOPS_ON_OFF_SWITCH = Y

Description

This functionality assures that TOPS computing module (CM) code will continue running into the year 2000 and beyond.

This functionality is provided by the following feature:

Feature number	Feature name
AF6674	TOPS Year 2000

Operation

Three areas of TOPS software are addressed: protocols, routines that check for leap year, and where years are added, subtracted, and/or compared. Therefore, the following changes/verifications are made:

- Years are 2 digits.
- The years 00 and up are made greater than 99 by adding 100 to year values 2000 (`00') and up to 2079. Therefore, a new century is assumed if the year is less than 80.
- Existing field widths are used and assumed that 00 > 99 by adding 100 to year values 2000 (`00') and up.
- February 29, 2000 is verified as a leap day.
- January 1, 2000 is verified as Saturday.
- Downstream processes are coordinated with these TOPS CM changes.

No operating company action is required.

Protocols

The following protocols generally have a two digit year. They have been checked and modified as necessary. Third party equipment that uses these protocols must be checked for compatibility with the TOPS software changes previously given.

- ASCII to TOPS MP
- OPP
- PARS
- External Rater
- QMS MIS
- AABS
- OAP

All of the protocols listed above have been modified to handle a `99' to `00' year change.

Translations table flow

The Year 2000 does not affect translations table flow.

Limitations and restrictions

Year 2000 has no limitations or restrictions.

Interactions

Year 2000 has no functionality interactions.

Activation/deactivation by the end user

Year 2000 requires no activation or deactivation by the end user.

Billing

Year 2000 does not affect billing.

Station Message Detail Recording

Year 2000 does not affect Station Message Detail Recording.

Datafilling office parameters

Year 2000 does not affect office parameters.

Year 2000 (end)

Datafill sequence

The Year 2000 does not affect translations.

Translation verification tools

Year 2000 does not use translation verification tools.

SERVORD

Year 2000 does not use SERVORD.

Treatment for Intercept Failure

Ordering codes

Functional group ordering code: OSB00101

Functionality ordering code: not applicable

Release applicability

TOPS14 and up

TOPS14 introduced Treatment for Intercept Failure.

Requirements

To operate, Treatment for Intercept Failure requires the following:

- Functionality BAS Generic, BAS00003
- Table TOPSFTR paramter TOPS_ON_OFF_SWITCH = Y

Description

This feature allows intercept calls destined for an operator to be sent to EMR6. Specifically, instead of attempting to queue for an operator, intercept calls can be sent to EMR6. When this feature is activated through table TOPSPARM, new parameter TMT_FOR_INTC_FAILURES, all call scenarios listed in the next section are sent to EMR6.

This functionality is provided by the following feature:

Feature number	Feature name
59021348	Treatment for Intercept Failures (TOPS14)

Operation

This section provides details of the feature.

Background

TOPS Automatic Call Distribution (ACD) provided a means for intercept calls bound for an operator to route to Emergency Route 6 (EMR6) treatment. In TOPS12, TOPS ACD was removed from the TOPS product line, so it is no longer available. The Queue Management System (QMS) has taken the place of ACD. Before this feature, QMS allowed intercept calls destined for an

Treatment for Intercept Failure (continued)

operator to use the QMS refinement tables. Intercept calls destined for the operator in this case are:

- the position was requested by the DAS due to a database search,
- search timeout: the DMS switch sent the Call Begin message and the DAS did not respond within the timeout period,
- network block: the call could not be connected to an ARU because a network path could not be found to the ARU
- no ARU channel: the call could not be connected to an ARU because all ARU channels were busy
- ARU failure: the call was connected to an ARU but the announcement could not be completed due to an equipment malfunction
- announcement not available: the call could not be connected to an ARU because the DMS is not equipped to play the kind of announcement requested,
- split referral: an intercepted number that has more than one referral number
- miscellaneous report: an intercepted number is not suitable for announcement and is presented to an operator for voice-quote
- subscriber request: the subscriber (through the DAS) is requesting to connect with an operator

Feature activation

This feature is activated by table TOPSPARM, new parameter TMT_FOR_INTC_FAILURES. Then, all call scenarios listed above are sent to EMR6.

Translations table flow

This feature does not have a translations table flow.

Limitations and restrictions

The limitations and restrictions that follow apply to Treatment for Intercept Failure.

- Intercept calls destined for an operator go to treatment when datafill indicates EMR6 is to be used instead of requesting an operator. Specifically, with this datafill, intercept calls never go to an operator even when operators are logged in and available.
- Treatment EMR6 cannot be changed to a different treatment. Datafill can be modified only to indicate whether to go to EMR6 or to an operator.
- This feature does not affect reconnect calls. Specifically, calls where the subscriber remains off-hook following an ARU announcement. This

condition is because calls of this nature are considered neither an ARU failure nor an intercept failure (DAS). That is, there is not a system problem nor does the DAS request an operator. To prevent reconnect calls from attempting to route to an operator, set the MAXIMUM_INT_RECALLS tuple in table VROPT to zero. When this tuple is set to zero, reconnect calls end. They do not attempt to route to an operator and do not receive EMR6 treatment.

Interactions

Treatment for Intercept Failure does not interact with other functionalities.

Activation and deactivation by the user

Treatment for Intercept Failure does not require activation or deactivation by the user.

Billing

Treatment for Intercept Failure does not generate billing records or changes.

Station Message Detail Recording

Treatment for Intercept Failure does not require Station Message Detail Recording.

Office parameters used by Treatment for Intercept Failure

Treatment for Intercept Failure does not generate office parameters.

Datafill sequence

The table that follows lists the tables that require datafill to put Treatment for Intercept Failure into operation. You must enter data into the table in this order.

Datafill requirements for Treatment for Intercept Failure

Table	Purpose of table
TOPSPARM	TOPS parameter contains office wide parameters for the TOPS office.

Treatment for Intercept Failure (continued)

Datafill related to Treatment for Intercept Failure for table TOPSPARM

The table that follows provides the datafill related to Treatment for Intercept Failure for table TOPSPARM. This table includes only those parameters that apply directly to Treatment for Intercept Failure.

Datafill related to table TOPSPARM

Parameter	Explanation and action
TMT_FOR_INTC_FAILURES	This parameter indicates handling of the following types of intercept failures: • failure to get an ARU • failure of the DAS to find a listing • timeout of the DAS to find a listing • failure of a facility during playback • a wake up message received during playback • split referral The values for this parameter are as follows: • Y - Send intercept failures to Emergency Route 6 (EMR6) in an Operator Centralization (OC) configuration. This value enables this feature. • N - Send intercept failures to the queue management system (QMS) refinement tables. This value is the default and disables this feature.

Datafill example for table TOPSPARM

The figure that follows shows sample datafill for table TOPSPARM.

MAP example for table TOPSPARM

```
PARMNAM                                        PARMVAL
-------------------------------------------------------
TMT_FOR_INTC_FAILURES                             Y
```

Translation verification tools

Treatment for Intercept Failure does not use translation verification tools.

Treatment for Intercept Failure (end)

SERVORD

Treatment for Intercept Failure does not use the Service Order System (SERVORD).

Two Digit ANI TOPS Office

Ordering codes

Functional group ordering code: OSB00101

Functionality ordering code: not applicable

Release applicability

BCS32 and later versions

Requirements

Two Digit ANI TOPS Office has the following requirements to operate:

- BAS Generic, BAS00003
- Table TOPSFTR parameter TOPS_ON_OFF_SWITCH = Y

Description

The following features provide this functionality:

Feature number	Feature name
NC0149	Two Digit ANI-TOPS Office

This feature provides the ability to associate an operator display with a two-digit Automatic Number Identification (ANI) ID. The customer enters data for the operator display. This feature provides the ability to record this number on Bellcore Automatic Message Accounting (AMA). This feature operates in a DMS-200 TOPS office. This feature uses any of the following signaling types:

- the Traffic Operator Position System (TOPS) Combined Feature Group D (COMFGD)
- Exchange Access Operator Service Signaling (EAOSS)
- Interim Operator Services System (OSS) signaling

These signaling types signal with a two-digit ANI ID. These signaling types normally operate in an Equal Access environment. This feature does not require Equal Access.

Operation

A description of the operation of Two Digit ANI TOPS Office appears in the following paragraphs.

Two Digit ANI TOPS Office (continued)

Background

Descriptions of the backgrounds of signaling, class of service (COS) determination and intelligent payphones appear in the following section.

Existing Signaling (background)

The signaling types that require an Equal Access environment and signal with an ANI ID digit pair are as follows:

- EAOSS
- TOPS COMFGD
- Interim OSS signaling

An Equal Access End Office (EAEO) and an Access Tandem (AT) use EAOSS signaling. The EAEO and the AT use EAOSS signaling to combine operator services traffic with other types of traffic. The EAEO and the AT combine the traffic on a single trunk group. The TOPS COMFGD signaling is a type of FGD signaling that occurs between an EAEO and an IEC switch. The DMS-200 TOPS office that provides operator services for the carrier can use TOPS COMFGD signaling.

Interim OSS signaling is like standard BELL signaling. The differences between Interim OSS signaling and standard BELL signaling are as follows:

- Interim OSS signaling can use only Multifrequency (MF) trunks, not Dial Pulse (DP) trunks
- the ANI spill of Interim OSS signaling contains a double digit ID, not a single digit ID
- the calling start signal determines if the call is a carrier call in Interim OSS signaling

An example that uses Interim OSS signaling appears in the following figure. The example includes the signaling formats and the tables accessed. The example includes the signaling formats and the tables accessed to define the COS for an Interim OSS call. The EAOSS and COMFGD signaling determine COS from Table OSSCAT datafill. The EAOSS and COMFGD do not determine COS from signaling format.

The Interim OSS signaling protocol appears in the following example.

Two Digit ANI TOPS Office (continued)

Interim OSS Signaling Protocol

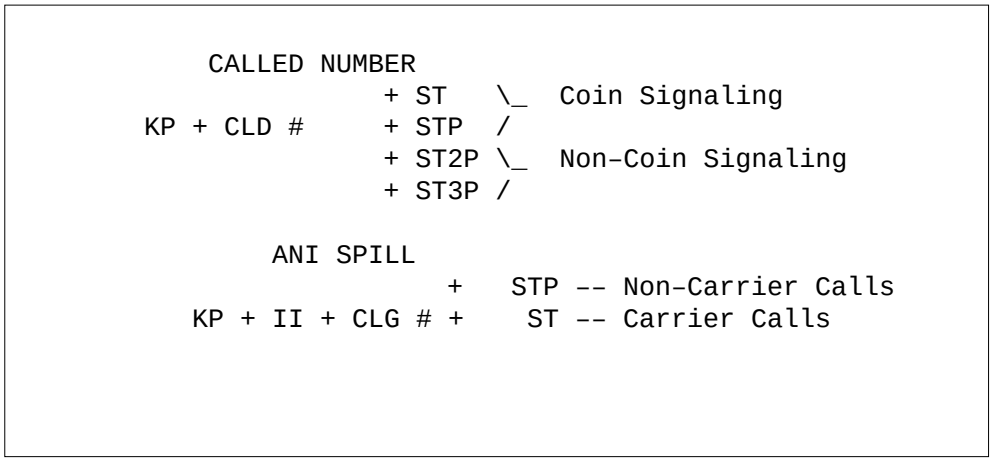

Note: The start signal for the called number indicates if the call is coin or non-coin. The start signal of the ANI spill indicates the call identification.

Defining Class of Service (COS) (background)

The TOPS office software uses different methods to determine the COS of a call. The COS defines the originating station of the call, like Coin, Hotel, Station or Restricted. A Restricted COS call has an operator display and specified billing restrictions. Examples of Restricted telephones include pay telephones that do not require coins in public buildings. Restricted telephones include prison telephones that allow collect billing only. The system does not allow 1+ calls from Restricted phones because 1+ calls require operator processing.

The following tables define the COS of calls that signal with a two-digit ANI ID.

- OSSCAT

  This table defines the format of specified ANI spills. These ANI spills are for calls that route over TOPS trunks. These calls signal with a two-digit ANI ID. The receipt of a two-digit ANI ID determines the COS for the call. You can set field CLGSERV to Hotel, Coin, Station or Special. If the value is Special, you can use the calling number to index table SPLDNID to set the COS.

- SPLDNID

  This table lists the directory numbers (DN) of lines with different special services. If a DN entry is a Restricted line, the field RBILCLAS provides an index into Table RESTBIL. The index obtains necessary information

for this call. Field RBILCLAS indexes into Table DARSTBIL for Directory Assistance (DA) calls.

- RESTBIL, DARSTBIL

  These tables provide the TOPS operator display. The customer can define the TOPS operator display. Field SCRNDISP of the operator display informs the operator of the special treatment for the call. Field BILTYPES provides the billing types for this call.

Note: Calls that signal with a single ID digit can use table BELLCAT. These calls cannot use table OSSCAT.

A method of call processing appears in the following example. This method explains how a call becomes a restricted call. This method explains the association of the call with a specified operator display and correct billing types.

The standard ANI ID 07 can signal a a call that originates from a Restricted telephone. The TOPS software examines the ANI ID digits of the ANI spill for traffic on an incoming combined trunk group. The software searches for a match in Table OSSCAT. The software uses the OSSCAT entry to determine COS. The ANI ID 07 must be in Table OSSCAT with the field CLGSERV as Special. This condition indicates that you use the calling number as an index to table SPLDNID to set the COS. In Table SPLDNID, the calling number is Restricted. You can use the Restricted Billing Class number assigned to this DN in table SPLDNID as an index to Table RESTBIL. The RESTBIL entry defines this billing class. The RESTBIL entry associates the billing class with a TOPS operator display and with correct billing types.

MAP example for table OSSCAT

```
ANI        .       CLGSERV     . . .
_____________________________________________________________

07         .       SPECIAL     . . .
```

The value Special in field CLGSERV begins a search in table SPLDNID for the calling number.

Two Digit ANI TOPS Office (continued)

MAP example for table SPLDNID

```
SPLDNID              SPLSEL
_____________________________________________________________

4163852211         RSTRCTD    3
```

The DN is Restricted in the previous entry example. The DN has an index of three to table RESTBIL.

MAP example for table RESTBIL

```
BILLCLAS    .      SCRNDISP         BILTYPES
_____________________________________________________________

   3        .     INMATE           COL
```

The entry in table RESTBIL determines the operator display and the billing restrictions for this call. The example tuple indicates that this telephone allows only collect billing.

Note: Each Originating DN requires entries in Table SPLDNID. If a large number of Restricted telephones are in use, a large number of table entries are required.

Intelligent Payphones (background)

An intelligent payphone is a type of Restricted telephone. This type of Restricted telephone can handle some or all of the billing functions at the telephone. For example, credit card validation and call rating are automatic. When the automated billing completes correctly, operator assistance is not required. Consider calls from these telephones normal 1+ station calls.

Before the release of this feature, operating companies used separate trunk groups for calls that require operator interruption. An example of a call that requires operator interruption is a 0- call. An example of a call that does not require an operator is a 1+ call. Some calls from an intelligent payphone needed to route to a TOPS office to provide an AMA cross check. If this condition occurred, operators needed to use a trunk group for the non-operator call. Before the release of this feature, the trunk group datafill did not specify these telephones as Restricted. This condition occurred because the software

did not allow 1+ calls from Restricted phones. The 1+ calls had to route to a TOPS position or to treatment.

Overview

This feature allows TOPS offices to enhance the processing of calls that signal with special two-digit ANI IDs. The end office must be able to signal with these ANI IDs. The end office must be able to associate each ANI ID with a special terminal type through the use of datafill. An example of a special terminal type is an intelligent payphone or a normal Restricted COS telephone. The calls that signal with these ANI ID digits or Special Line Traffic (SLT) can mix with traffic on TOPS trunks.

This feature allows the system to generate a user-defined TOPS operator display. The system generates this display for calls from these special lines that require operator processing. The special two-digit ANI ID or SLT ANI code triggers the display call type of information on the screen. The display indicates to the operator that the call originates from a specified terminal type. The operator can respond quickly to the incoming call.

The following signaling types can signal the SLT ANI code:

- TOPS COMFGD
- EAOSS
- Interim OSS signaling

These signaling types signal with a two-digit ANI ID. These signaling types normally operate in an Equal Access environment. This feature allows Interim OSS signaling to operate in an environment that is not an Equal Access environment. This feature does not require Equal Access.

Added abilities

Descriptions of the abilities that this feature provides appear in the following:

- This feature allows the SLT ANI code to trigger the operator display and acceptable billing types. The operator display and acceptable billing types can associate with Special Line Traffic. An entry in table SPLDNID does not trigger the operator display and acceptable billing types. The removal of searches in the large SPLDNID table improves real-time. This feature requires less data store. A smaller amount of data store simplifies data table maintenance. Data table maintenance is not necessary any longer

Two Digit ANI TOPS Office (continued)

because the addition of individual lines to table SPLDNID is not a requirement.

Note: Restricted COS telephones and intelligent payphones can signal with SLT ANI codes.

- This feature includes the SLT ANI code for a special line call in an AMA record. The system generates this AMA record for the special line call. The AMA record is a Phase 2 Expanded Bellcore AMA Format (EBAF) AMA record. The additional Module code 306 appends to the AMA record. This action allows downstream processing personnel to identify the originating terminal type associated with the SLT ANI code.
- The use of SLT ANI digits enhances the processing of calls from intelligent payphones. The SLT ANI digits allow calls from these telephones to mix with other operator traffic. This feature allows the system to treat 1+/011+ calls from intelligent payphones as non-operator calls from normal station telephones. The intelligent payphones signal with an SLT ANI code to accomplish this condition. These calls do not have billing restrictions or operator intervention. The SLT ANI code that identifies the originating terminal type can appear in the AMA record. The appearance of the SLT ANI code in the AMA record provides the operating company with an AMA verification record for this call.

Operation

As with standard two-digit ANI IDs, the SLT ANI codes must be present as entries in Table OSSCAT. The SLT ANI codes must be present in order to process. This feature allows you to enter data for table OSSCAT when Equal Access is not available. Field CLGSERV in Table OSSCAT must have the value Special for each SLT ANI entry in the table. The entry for field STATCLAS in Table TRKGRP must be Combined. The entry Combined indicates that incoming traffic combines. If the call uses Interim OSS signaling, the entry for field CLGID of table TRKGRP must be OSS. This feature allows the use of the OSS value when Equal Access is not available.

The ANI ID normally accesses table SPLDNID. With this new processing, the ANI ID first indexes the new Table SLTANIID created for this feature. If the ANI ID does not find a match, the system uses the current processing of special numbers. The ANI ID searches table SPLDNID for a match of the calling DN. The ANI ID can find a match in table SLTANIID. If the ANI ID finds a match, the match indicates if the ANI ID is an SLT ANI code. The system bypasses table SPLDNID for these calls. If the user dials a 0+/0-/01+ call, the system treats the call as a Restricted call. This entry in Table SLTANIID provides the index to table RESTBIL. A SPLDNID entry does not provide the index. Table

RESTBIL or DARSTBIL obtains the operator display and applies billing restrictions.

This feature allows the system to treat the call as a 1+/011+ call from a normal station telephone under the following conditions:

- the call originates from a smart payphone
- the pay telephone signals with the use of an SLT ANI code
- automated billing completes at the telephone

Operator involvement is not required. You can index table RESTBIL to obtain an operator display and correct billing types. You do not need to index this table after you determine that the ANI ID is an SLT ANI code. This new feature examines the SLT ANI code to determine if the call originates from a smart payphone. If the call originates from a smart payphone, the 1+/011+ calls can bypass the operator.

Operating company personnel can record the SLT ANI code in AMA Module code 306, Originating Line Information Parameter. Module code 306 appends to the EBAF Phase 2 AMA record for the call.

Note: This option allows operating company personnel to record the SLT ANI code for operator and non-operator calls. If Phase 2 EBAF AMA is not available, the system does not records SLT ANI code. If Phase 2 EBAF AMA is not available, operating company personnel can continue to use the other feature options.

Table SLTANIID entries occur for each ANI ID. Table SLTANIID entries do not occur for each originating DN, as in table SPLNID. Table SPLDNID entries are required for each originating DN basis. Table SLTANIID is normally smaller. Searches in this table and maintenance of table SLTANIID are easier than for Table SPLDNID.

This feature does not require special activation procedures. The TOPS office must have SLT ANI code entries in Table SLTANIID and Table OSSCAT.

Translations table flow

The Two Digit ANI TOPS Office does not affect the translation process.

Limits

The following limits apply to Two Digit ANI TOPS Office:

- Table OSSCAT moves to the TOPS base package. You can enter data for table OSSCAT if Equal Access is not available. This feature allows field

Two Digit ANI TOPS Office (continued)

CLGID to contain the value OSS when Equal Access is not available. Field CLGID is in Table TRKGRP in the TOPS office.

- A 0+/0-/01+ call signaled with SLT ANI digits acts as a call with a Restricted COS. The system does not treat the call as a Hotel, Coin or Station COS.
- Calls that signal with SLT ANI digits can combine with current traffic on TOPS trunks. Field STATCLASS in Table TRKGRP (TOPS) must have a value of Combined. Datafill checks do not enforce this restriction.
- This feature does not operate in a direct line to TOPS configuration. are Trunk MF signaling determines the SLT ANI ID digits.
- The availability of Equal Access in an environment can determine the ANI start signal. The ANI start signal must be for a call that signals with an SLT ANI code and Interim OSS signaling. When an Equal Access environment is not available, the ANI start signal is STP. When Equal Access is available, the ANI start signal can be STP or ST for carrier calls.
- This feature does not operate with incoming Interim OSS coin calls. Some calls have an ST or STP start signal for the called number. These calls do not attempt to find an ANI ID match in Table SLTANIID.
- Phase 2 EBAF AMA must be available for this feature to produce the appended 306 AMA Module.
- When operating company personnel enter SLT ANI codes, personnel must consider the current standard ANI ID values. For example, ANI ID 06 can signify Hotel calls. If this condition applies, you cannot enter data that designates ANI ID 06 as an SLT ANI code.
- Calls on a two-digit ANI trunk must signal two-digit ANI. Current signaling conforms to this rule. Single-digit and two-digit ANI cannot combine on the same trunk.
- The SLT ANI ID digits do not propagate through on Equal Access calls. The data in the current table EAANIID normally gives the operating company the ability to define ANI ID digits. These ANI ID digits are in the ANI spill of calls for all InterLATA Carriers (ICs). One special slot is available for one standard value associated with restricted calls. The different specified SLT ANI codes cannot propagate because only one special slot is available.

- This feature does not modify SuperCAMA software. Feature NC0199 modifies SuperCAMA software. The following packages include feature NC0199:
  - — Two Digit ANI ID - End Office (LAMA)
  - — Two Digit ANI ID - CAMA
  - — Two Digit ANI ID - End Office (non-LAMA)
- As with the current software, the system routes a call to a TOPS operator position if ANI failure occurs. Current software allows the TOPS office software to determine if the calling DN is an entry in table SPLDNID. If the calling DN is an entry in table SPLDNID, the TOPS office software can determine if billing restrictions apply. This feature does not allow the operator to check if an entry is present in new table SLTANIID for this call. The SLT ANI code is not available when ANI failure occurs. If ANI failure occurs, billing restrictions can be present without operator knowledge. Errors in billing can occur.

Interactions

Descriptions of the interactions between Two Digit ANI TOPS Office and SLT ANI ID digits appear in the following paragraphs.

SLT ANI ID digits

Some end offices (EO) must be able to signal SLT ANI ID digits for Two Digit ANI TOPS Office to operate. These EOs are the EOs that connect to the TOPS switch. The DMS-100 EO must have one of the following feature packages for this feature to operate:

- Two Digit ANI - End Office (LAMA)
- Two Digit ANI - End Office (non-LAMA), Two Digit ANI (CAMA)
- Flexible ANI ID Assignment

If the DMS-100 EO has one of these feature packages, SLT ANI IDs in table SLTANIID and table DANIID must match. Table SLTANIID is in the TOPS office. Table DANIID is in the EO.

Delete these entries if the entries are in the table. Telephones can add the ability to signal with an SLT ANI code. If these telephone codes are in table SPLNID, delete the entries. This action reduces data store. If you do not delete these redundant SPLDNID entries, the use of RESTBIL indexes in Table SLTANIID occurs. The system ignores the table SPLDNID entries and the RESTBIL indexes that correspond.

Two Digit ANI TOPS Office (continued)

Activation/deactivation by the end user

Two Digit ANI TOPS Office does not require activation or deactivation by the end user.

Billing

Two Digit ANI TOPS Office does not affect billing.

Station Message Detail Recording

Two Digit ANI TOPS Office does not affect Station Message Detail Recording.

Datafilling office parameters

Two Digit ANI TOPS Office does not affect office parameters.

Datafill sequence

The tables that require datafill to implement Two Digit ANI TOPS Office appear in the following table. The tables appear in the correct entry order.

Datafill requirements for Two Digit ANI TOPS Office

Table	Purpose of table
RESTBIL	TOPS Restricted Billing. This table specifies the Restricted Billing Class (RBC) that AMA must record. The AMA must record an RBC for Toll and Assist (TA) and DA calls.
OSSCAT	Table OSSCAT allows the operating company to define the FORMAT, CLGSERV, REST and ROUTE fields. The operating company can define these fields after this company receives a specified pair of ANI ID digits. The operating company receives this pair of digits over a TOPS trunk with Operator Services Signaling.
SLTANIID	Table SLTANIID provides an index to table RESTBIL to associate an operator display and correct billing types with each SLT ANI entry. Table RESTBIL contains the information that can associate an operator display and correct billing types with each SLT ANI entry.

Datafilling table RESTBIL

Datafill for Two Digit ANI TOPS Office for table RESTBIL appears in the following table. The fields that apply to Two Digit ANI TOPS Office appear in this table. See the data schema section of this document for a description of the other fields.

Datafilling table RESTBIL

Field	Subfield or refinement	Entry	Explanation and action
BILLCLAS		00 to 100	Billing Class. Enter the RBC from field RBILCLAS in table SLTANIID.

Datafill example for table RESTBIL

If the incoming call is a 0+/0-/01+ call, the table RESTBIL entry determines the operator display and the correct billing types. The operator display and the correct billing types are for this 0+/0-/01+ call.

Sample datafill for table RESTBIL appears in the following example.

MAP example for table RESTBIL

```
BILLCLAS    AMARBC  SCRNDISP    BILTYPES
_____________________________________________________

25          25      SMARTPAY    SPLCLG CC SPLCLD COL 3RD
```

Two Digit ANI TOPS Office (continued)

Datafilling table OSSCAT

Datafill for Two Digit ANI TOPS Office for table OSSCAT appears in the following table. The fields that apply to Two Digit ANI TOPS Office appear in this table. See the data schema section of this document for a description of the other fields.

Datafilling table OSSCAT

Field	Subfield or refinement	Entry	Explanation and action
ANI		00-99	Index in table.
CLGSERV		SPECIAL	Calling service feature and call origination type. Enter SPECIAL to cause a search in table SLTANIID. The search determines if the ANI ID is an SLT ANI code.

Datafill example for table OSSCAT

The following sample datafill is for a telephone to signal with an SLT ANI code of 15. The data entry for this telephone occurs at the end office.

Sample datafill for table OSSCAT appears in the following example.

MAP example for table OSSCAT

```
ANI    FORMAT    CLGSERV    REST    ROUTE
_____________________________________________________________

15       ANI      SPECIAL    NONE      N
```

Datafilling table SLTANIID

This feature creates the new SLTANIID table. Each two-digit SLT ANI code appears in an entry in this table. As with earlier versions of software, table OSSCAT defines the types of ANI ID pairs. The ANI ID pairs give information about a call. Table OSSCAT must define these special ANI ID codes to access Table SLTANIID and activate this feature. Table SLTANIID provides an index to table RESTBIL. Table SLTANIID provides this index to associate an operator display and correct billing types with each SLT ANI

Two Digit ANI TOPS Office (continued)

entry. Table RESTBIL contains the information that can associate an operator display and correct billing types with each SLT ANI entry.

Note 1: Some Special ANI ID digit pairs in table OSSCAT are not SLT ANI codes. These digit pairs are not entries in table SLTANIID. The entries in table SLTANIID are SLT ANI codes. Calls signaled with these standard ANI ID digits use standard processing. The system searches table SPLDNID for a match for the calling number.

Note 2: If an ANI ID match is not in Table SLTANIID, special AMA processing does not occur.

The system must use Phase 2 EBAF to record an SLT ANI code in AMA. If Phase 2 EBAF is not available, you must set Field SLTAMA to N. The value Y is an acceptable data entry. Value Y is processed as a value of N.

Datafill for Two Digit ANI TOPS Office for table SLTANIID appears in the following table. The fields that apply to Two Digit ANI TOPS Office appear in this table. Refer to the data schema section of this document for a description of the other fields.

Datafilling table SLTANIID

Field	Subfield or refinement	Entry	Explanation and action
SLTANI		00 to 99	Index to table from field ANI in table OSSCAT. These ID digits are in the MF ANI spill. These digits identify the terminal type. The entry range is from 00 to 99.
RBILCLAS		00 to 100	Restricted Billing Class index to table RESTBIL. If an entry not defined by the operating company occurs, the system uses the default billing types. The system also uses the default screen display. The default billing types are all types except sent paid. The default screen display is blank.

Two Digit ANI TOPS Office (continued)

Datafilling table SLTANIID

Field	Subfield or refinement	Entry	Explanation and action
ONEPLUS		Y or N	Enter Y to indicate that a call signaled with this SLT ANI originates from a smart payphone. Intelligent payphones allow 1+ / 011+ calls. The system can treat this call as a normal 1+/ 011+ station call. Enter N to indicate that the system does not allow 1+ / 011+ calls. Entry N routes the call to the operator or to a treatment The value of RBILCLAS for the tuple determines the destination of the routed call. For example, a class that allows sent paid PD billing routes a call.
SLTAMA		Y or N	Enter Y to indicate that the AMA record must include the SLT ANI code for operator and non-operator calls. Enter N to indicate that the AMA record must not include the SLT ANI code.

Datafill example for table SLTANIID

If the incoming call is an operator call, the value 25 in field RBILCLAS indexes into table RESTBIL. Value 25 indexes into table RESTBIL to obtain the TOPS operator display and the billing restrictions for this call. The value Y in field ONEPLUS indicates that incoming 1+/011+ calls are allowed. The system treats the incoming calls as non-operator calls from normal station phones. These incoming calls ignore the RBILCLAS value. Field SLTAMA has the value Y. Module code 306 includes the SLT ANI code. Module code 306 is an extension to the EBAF AMA record for this call.

Sample datafill for table SLTANIID appears in the following example.

MAP example for table SLTANIID

```
SLTANI     RBILCLAS      ONEPLUS    SLTAMA
_____________________________________________

15          25            Y          Y
```

Tools for verifying translations

Two Digit ANI TOPS Office does not use tools for verifying translations.

SERVORD

Two Digit ANI TOPS Office does not use SERVORD.

DMS-100 Family

North American DMS-100

TOPS Translations Guide Volume 2 of 5

Group OSB

electronic mail: cits@nortelnetworks.com

Copyright © 1996-2001 Nortel Networks,
All Rights Reserved

NORTEL NETWORKS CONFIDENTIAL: The information contained herein is the property of Nortel Networks and is strictly confidential. Except as expressly authorized in writing by Nortel Networks, the holder shall keep all information contained herein confidential, shall disclose the information only to its employees with a need to know, and shall protect the information, in whole or in part, from disclosure and dissemination to third parties with the same degree of care it uses to protect its own confidential information, but with no less than reasonable care. Except as expressly authorized in writing by Nortel Networks, the holder is granted no rights to use the information contained herein.

Informaton id subject to change without notice. Northern Telecom reserves the right to make changes in design or components as progress in engineering and manufacturing may warrant.

Trademark information

Publication number: 297-8403-910
Product release: TOPS15 and up
Document release: Standard 01.01
Date: May 2001
Printed in the United States of America

NORTEL NETWORKS™

How the world shares ideas.